BEXAR COUNTY
PUBLIC WORKS DEPARTMENT

TALLEY ROAD
POTRANCO ROAD TO WISEMAN BLVD.

EXCEPTIONS: NONE
EQUATIONS: NONE
RAILROAD CROSSINGS: NONE

DESIGN SPEED = 45 MPH MAINLANES
= 20 MPH CROSS STREET
TOTAL ROADWAY LENGTH = 12,660.23 FT = 2.398 MI
TOTAL BRIDGE LENGTH = 240.00 FT = 0.045 MI
TOTAL PROJECT LENGTH = 12,900.23 FT = 2.443 MI

AREA OF DISTURBED SOIL = 32.605 ACRES

ADT: (2015) 10,192
ADT: (2035) 22,686

REGISTERED ACCESSIBILITY
SPECIALIST REQUIRED.
TDLR NO. XXXXXXXXX

END PROJECT
TALLEY ROAD
STA 231+00.00

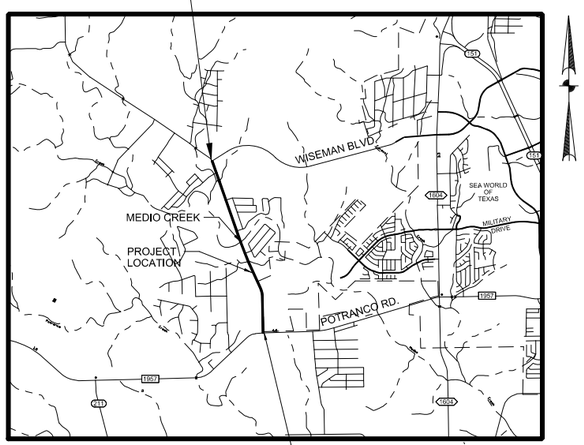

NOT TO SCALE

BEGIN PROJECT
TALLEY ROAD
STA 101+99.77

90% SUBMITTAL
2/23/2017

IFB 2017-XXX

NELSON W. WOLFF	COUNTY JUDGE
SERGIO "CHICO" RODRIGUEZ	COMMISSIONER PCT. 1
PAUL ELIZONDO	COMMISSIONER PCT. 2
KEVIN A. WOLFF	COMMISSIONER PCT. 3
TOMMY CALVERT	COMMISSIONER PCT. 4
DAVID SMITH	COUNTY MANAGER
RENEE D. GREEN, P.E.	DIRECTOR OF PUBLIC WORKS/ COUNTY ENGINEER

VOLUME II

PREPARED BY:
CP&Y Inc
12500 SAN PEDRO AVENUE,SUITE 450
SAN ANTONIO,TX 78216
(210) 494-8004
(210) 494-8286
TBPE FIRM REGISTRATION NO: 1741

SPECIFICATIONS ADOPTED BY THE TEXAS DEPARTMENT OF TRANSPORTATION, NOVEMBER 1, 2014 AND SPECIFICATION ITEMS LISTED AND DATED AS FOLLOWS, SHALL GOVERN ON THIS PROJECT: REQUIRED CONTRACT PROVISIONS FOR ALL FEDERAL–AID CONSTRUCTION CONTRACTS (FORM FHWA 1273, MAY 1, 2012).

VOLUME I

SHEET NO.	
GENERAL	
1	TITLE SHEET
2	INDEX OF SHEETS
3 – 5	PROJECT LAYOUTS
6 – 14	TYPICAL SECTIONS
15	GENERAL NOTES
~	ESTIMATE AND QUANTITY SHEETS
16 – 17	ROADWAY SUMMARY
18	EARTHWORK SUMMARY
19	DRIVEWAY SUMMARY
20	REMOVAL SUMMARY
21	RETAINING WALL AND BRIDGE SUMMARY
22 – 29	TCP SUMMARY
30	SW3P SUMMARY
31	DRAINAGE SUMMARY
32	TRAFFIC SIGNAL SUMMARY
33	SUMMARY OF SIGNING AND PAVEMENT MARKING
34 – 37	SUMMARY OF SMALL SIGNS
TRAFFIC CONTROL PLAN	
38	TCP GENERAL NOTES
39 – 40	TCP CONSTRUCTION PHASING
41	SCHEDULE OF TRAFFIC CONTROL AND ADVANCED WARNING DEVICES
42 – 54	TCP TYPICAL SECTIONS
55 – 63	TCP CULVERT WIDENING SECTIONS
64 – 77	TCP UTILITY PHASE
78 – 91	TCP PHASE 1
92 – 106	TCP PHASE 2
107 – 126	TCP PHASE 3A
127 – 132	TCP PHASE 3B
133 – 148	TCP PHASE 4A
149	TCP PHASE 4B
TRAFFIC CONTROL PLAN STANDARDS	
150 – 161	BC(1) THRU (12)–14
162	TCP(2–1)–12
163	TCP(2–2)–12
164	TCP(2–3)–12
165	TCP(2–4)–12
166	TCP(3–1)–13
167	TCP(3–3)–14
168	TCP(3–4)–13
169	TCP(7–1)–13
170 – 171	WZ(BTS–1) & (BTS–2)–13
172	WZ(RCD)–13
173	WZ(STPM)–13
174	WZ(TD)–13
175	WZ(UL)–13
176 – 177	LPCB–13
178 – 179	CSB(1)–10
180	CSB(7)–13
181 – 182	FSLP(TR)–10
183	ABSORB–16
ROADWAY DETAILS	
184	SURVEY CONTROL LAYOUT
185 – 187	SURVEY CONTROL DETAILS
188 – 189	ALIGNMENT DATA SHEET
190 – 213	PLAN & PROFILE LAYOUTS
214 – 225	PLAN & PROFILE LAYOUTS–CROSS STREETS
226 – 237A	INTERSECTION LAYOUTS
238	MISCELLANEOUS ROADWAY DETAILS
239	SPECIAL CURB DETAILS
240 – 245	DRIVEWAY PROFILES
246 – 257	REMOVAL LAYOUTS
ROADWAY STANDARDS	
258	WF(2)–10
259	MISCELLANEOUS CURB & SIDEWALK DETAILS (MOD)(SA District)
260 – 263	PED–12A
264 – 267	MB–15(1)
268 – 270	PRD–13
RETAINING WALL DETAILS	
271 – 273	RETAINING WALL KEY MAP
274 – 283	RETAINING WALL PLAN & PROFILE
RETAINING WALL STANDARDS	
284 – 286	C221
287	RW(MSE)DD
288 – 289	RW(MSE)
290	RW 1(H)A
291	RW 1(H)B
292	RW 1(H)C
293	RW2
294	GF(31)MS–11

VOLUME I

DRAINAGE DETAILS	
295	HYDRAULIC DATA SHEET
296	SCOUR DATA SHEET
297	DRAINAGE AREA MAP
298 – 300	CULVERT PLAN & PROFILE
301 – 305	DRAINAGE COMPUTATIONS
306 – 329	SYSTEM DRAINAGE AREA MAPS
330 – 353	STORM SEWER PLAN & PROFILE
354	STORM SEWER PROFILES
355 – 361	MISCELLANEOUS DRAINAGE DETAILS
DRAINAGE STANDARDS	
362	MC–MD
363 – 364	MC–8–13
365	SCC–MD
366	SCP–MD
367	ECD
368	PW
369	BCS
370 – 372	CURB INLET TYPE I & II (SA DISTRICT)
373	MANHOLE TYPE 1 THRU 5 (SA DISTRICT)
374 – 375	SETP–CD
376 – 377	PSL
378	PJB
379	PB
380	SCP–3
381	SCP–4
382	SCP–8
382A	GRATE INLET (CoSA)

VOLUME II

BRIDGE	
383	BRIDGE LAYOUT MEDIO CREEK BRIDGE
384 – 385	CONSTRUCTION SEQUENCE MEDIO CREEK BRIDGE
386	ESTIMATED QUANTITIES AND BEARING SEAT ELEVATIONS
387	ABUTMENT NO. 1 DETAILS – PHASE 3A
388	ABUTMENT NO. 1 DETAILS – PHASE 4A
389	ABUTMENT NO. 4 DETAILS – PHASE 3A
390	ABUTMENT NO. 4 DETAILS – PHASE 4A
391	MISCELLANEOUS ABUTMENT DETAILS
392	INTERIOR BENT NOS. 2 & 3 DETAILS – PHASE 3A
393 – 394	INTERIOR BENT NOS. 2 & 3 DETAILS – PHASE 4A
395	GIRDER LAYOUT – PHASE 3A
396 – 397	240.00' PRESTRESSED CONCRETE I–GIRDER UNIT – PHASE 3A
398	GIRDER LAYOUT – PHASE 4A
399 – 400	240.00' PRESTRESSED CONCRETE I–GIRDER UNIT – PHASE 4A
BRIDGE STANDARDS	
401 – 402	IGD
403 – 405	IGEB
406 – 407	IGMS
408	IGND
409	IGTS (MOD)
410	IGSK
411 – 412	MEBR (C)
413 – 416	PCP
417	PCP–FAB
418 – 419	PMDF
420	AJ
421 – 423	TYPE C221
424 – 425	BRSM
426	BS–EJCP
427	CSAB
428 – 429	FD
430	BAS–A
431 – 432	SRR
433	CRR
TRAFFIC ITEMS	
434 – 438	TEMPORARY SIGNAL SHEETS
439 – 444	TRAFFIC SIGNAL DESIGN SHEETS
445 – 458	SIGNING AND PAVEMENT MARKING LAYOUTS
459 – 461	SIGN DETAILS
TRAFFIC STANDARDS	
462	SMA–80(1)–12
463	SMA–80(2)–12
464	MA–C–12
465	MA–D–12
466	TS–FD–12
467	LUM–A–12
468	CFA–12
469	ED(1)–14
470	ED(3)–14
471	ED(4)–14
472	ED(5)–14
473	ED(6)–14
474	ED(7)–14

VOLUME II

TRAFFIC STANDARDS (CONTINUED)	
475	ED(8)–14
476	SNS–95
477	MTS (SA District)
478	VD(1)–06 (SA District)
479	VD(2)–06 (SA District)
480	Street Name Signing Details (Bexar County)
481	Type 332 Cabinet Foundation with BBU System (COSA)
482	PM(1)–12
483	PM(2)–12
484	PM(3)–12
485	TSR(3)–13
486	TSR(4)–13
487	D&OM(1)–15
488	D&OM(2)–15
489	SMD(GEN)–08
490	SMD(SLIP–1)–08
491	SMD(SLIP–2)–08
492	SMD(SLIP–3)–08
493	SMD (TWT)–08
494	TWLTL (2) (SA District)
495	TWLTL (3) (SA District)
496	TWLTL (4) (SA District)
497	SPRFBA(1)–13
498	BLPM–10
ENVIRONMENTAL ISSUES	
499 – 512	SW3P LAYOUT PHASE 1
513 – 526	SW3P LAYOUT PHASE 2
527 – 540	SW3P LAYOUT PHASE 3
541	EPIC
542	SW3P NARRATIVE
ENVIRONMENTAL STANDARDS	
543	EC(1)–16
544	EC(2)–16
545	EC(3)–16
546 – 548	EC(9)–16
CROSS SECTIONS	
549 – 636	TALLEY ROAD CROSS SECTIONS
637	GORDONS KNOLL CROSS SECTIONS
UTILITIES	
638 – 648	SUE LAYOUTS
649 – 678	SAWS PLANS

PRELIMINARY

FOR INTERIM REVIEW ONLY

NOT FOR CONSTRUCTION, BIDDING, OR PERMIT PURPOSES.

CP&Y

ENGINEER JAIME AGUILAR

P.E. No. 87606 DATE 2/23/2017

BEXAR COUNTY
PUBLIC WORKS DEPARTMENT

NO	DATE	DESCRIPTION	DWG	CHK

REVISIONS

CP&Y
12500 SAN PEDRO AVENUE, SUITE 450
SAN ANTONIO, TEXAS 78216
TEL (210) 494–8004
FAX (210) 494–8286
T.B.P.E. FIRM # 1741

TALLEY ROAD

INDEX OF SHEETS

PROJECT NUMBER:		SHEET NO.
BC (XXXX) XX		2
DESIGNED BY: AJA	ROADWAY/HIGHWAY:	
CHECKED BY: CPY	TALLEY ROAD	
DRAWN BY: AJA	STATE	COUNTY
CHECKED BY: AJA	TEXAS	BEXAR

2/23/2017 9:18:16 AM rgonzales
cpybw_ANSIB.tbl
cpypt_ANSIB.plt
pw:/Active Projects/BEXA14048.01/8.00 Plans and Drawings/8.30 Cut Sheets/8.3.01 General/14048GNis02.dgn

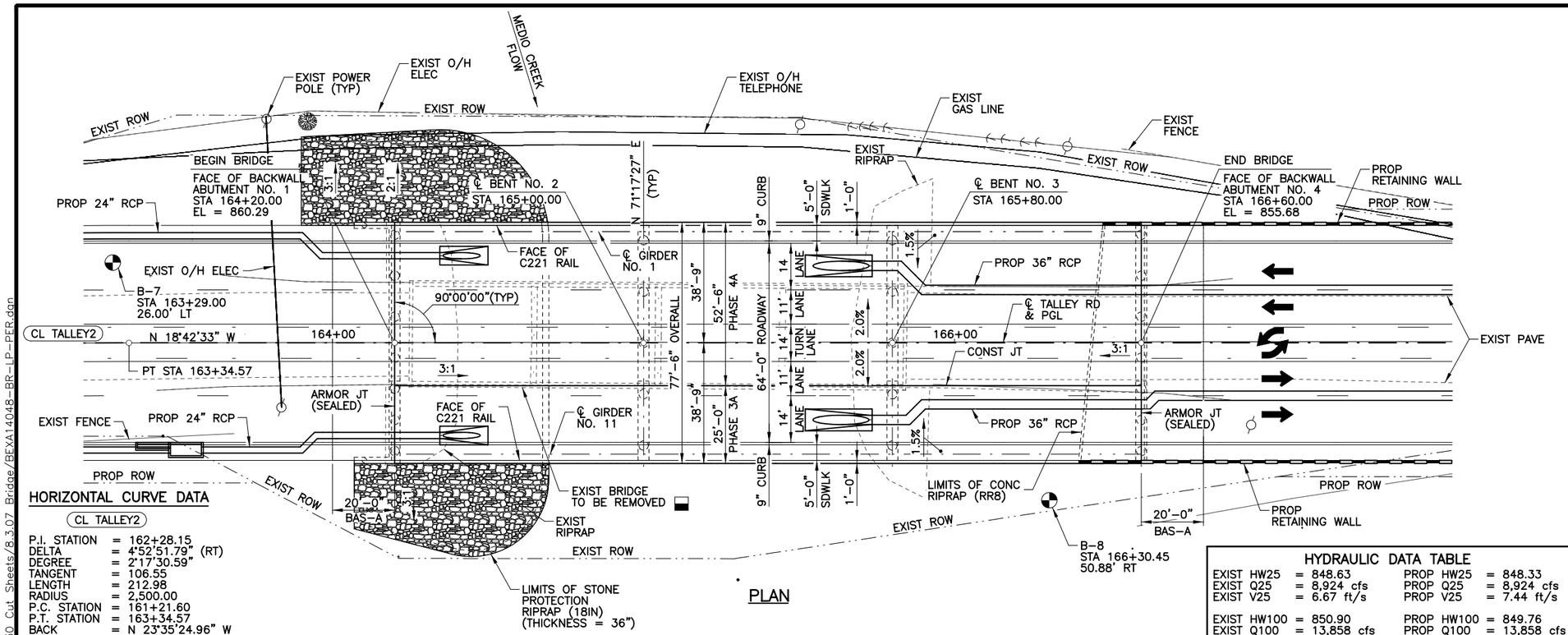

HORIZONTAL CURVE DATA

CL TALLEY2

P.I. STATION	= 162+28.15
DELTA	= 4°52'51.79" (RT)
DEGREE	= 2°17'30.59"
TANGENT	= 106.55
LENGTH	= 212.98
RADIUS	= 2,500.00
P.C. STATION	= 161+21.60
P.T. STATION	= 163+34.57
BACK	= N 23°35'24.96" W
AHEAD	= N 18°42'33.17" W

PLAN

HYDRAULIC DATA TABLE

EXIST HW25	= 848.63	PROP HW25	= 848.33
EXIST Q25	= 8,924 cfs	PROP Q25	= 8,924 cfs
EXIST V25	= 6.67 ft/s	PROP V25	= 7.44 ft/s
EXIST HW100	= 850.90	PROP HW100	= 849.76
EXIST Q100	= 13,858 cfs	PROP Q100	= 13,858 cfs
EXIST V100	= 5.80 ft/s	PROP V100	= 9.32 ft/s

20 10 0 20 40
SCALE FEET

GENERAL NOTES:

1. DESIGNED ACCORDING TO 2014 AASHTO LRFD BRIDGE DESIGN SPECIFICATIONS WITH THE LATEST INTERIMS (7th ED) (HL93 LOADING).
2. "D" DENOTES SLOTTED HOLE AT BEAM END. SEE BENT DETAILS FOR LOCATION OF DOWELS D.
3. THE "H" VALUES SHOWN ARE ESTIMATED COLUMN HEIGHTS. CONTRACTOR IS RESPONSIBLE FOR CALCULATING ACTUAL COLUMN HEIGHTS BASED ON FIELD CONDITIONS.

EXISTING 4 SPAN CONCRETE SLAB AND GIRDER BRIDGE (160'-1" LENGTH X 34'-3" WIDTH) TO BE REMOVED IN PHASES. EXISTING CONCRETE SUBSTRUCTURE TO BE REMOVED 2'-0" BELOW FINISHED GROUND.

EXIST NBI NUMBER: 15-015-0-AA27-93-006
PROP NBI NUMBER: XX-XXX-X-XXXX-XX-XXX
FUNCTIONAL CLASSIFICATION: (LOCAL) RURAL
ARTERIAL DESIGN SPEED: 45 MPH
EXISTING ADT: 10,192 (2015)
FUTURE ADT: 22,686 (2035)

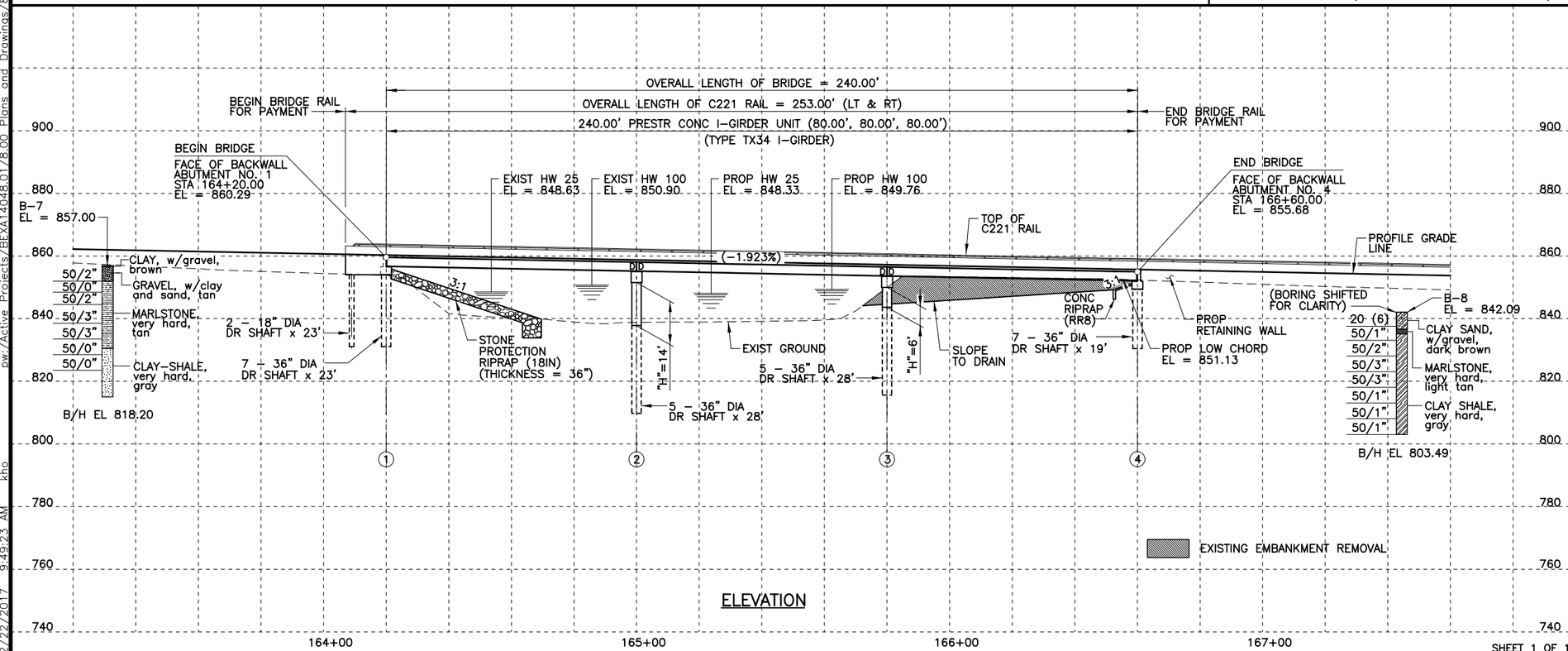

ELEVATION

PRELIMINARY

90% SUBMITTAL
FOR INTERIM REVIEW ONLY
NOT FOR CONSTRUCTION, BIDDING, OR PERMIT PURPOSES.

CP&Y

ENGINEER KELLY HO
P.E. No. 112947 DATE 2/22/2017

BEXAR COUNTY
PUBLIC WORKS DEPARTMENT

NO	DATE	DESCRIPTION	DWG	CHK

REVISIONS

CP&Y
12500 SAN PEDRO AVENUE, SUITE 450
SAN ANTONIO, TEXAS 78216
TEL (210) 494-8004
FAX (210) 494-8286
T.B.P.E. FIRM # 1741

TALLEY ROAD

BRIDGE LAYOUT
MEDIO CREEK BRIDGE

PROJECT NUMBER:		SHEET NO.
0849-01-046		383
DESIGNED BY: KH	ROADWAY/HIGHWAY:	
CHECKED BY: CPY	TALLEY ROAD	
DRAWN BY: CPY	STATE	COUNTY
CHECKED BY: CPY	TEXAS	BEXAR

SHEET 1 OF 1

cpybw_ANSIB.tbl
cpypdf_ANSIB.pltcfg
pw:/Active Projects/BEXA14048.01/8.00 Plans and Drawings/8.30 Cut Sheets/8.3.07 Bridge/BEXA14048-BR-LP-PER.dgn
2/22/2017 9:49:23 AM kho
pw:/Active Projects/BEXA14048.01/8.00 Plans and Drawings/8.30 Cut Sheets/8.3.07 Bridge/BEXA14048-BR-LP-PER.dgn

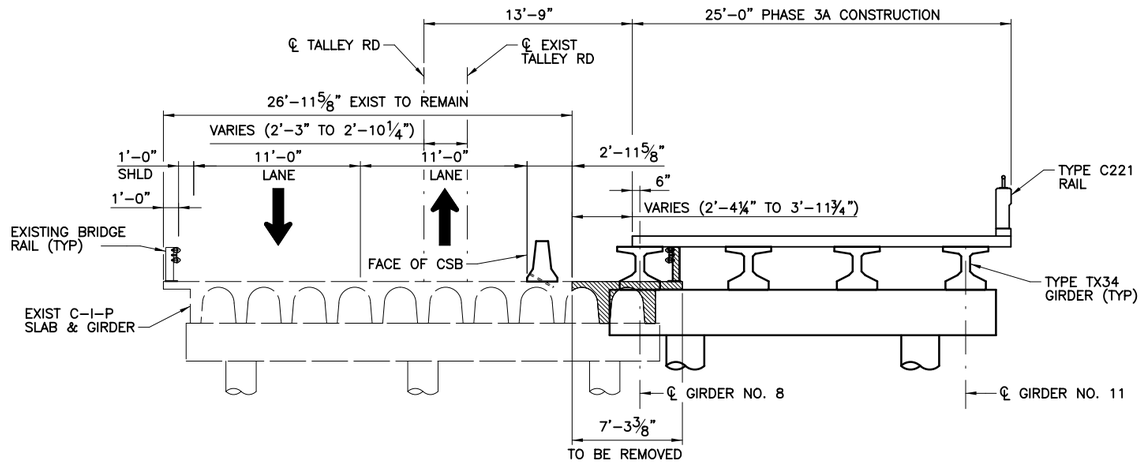

CONSTRUCTION SEQUENCE PHASE 3A

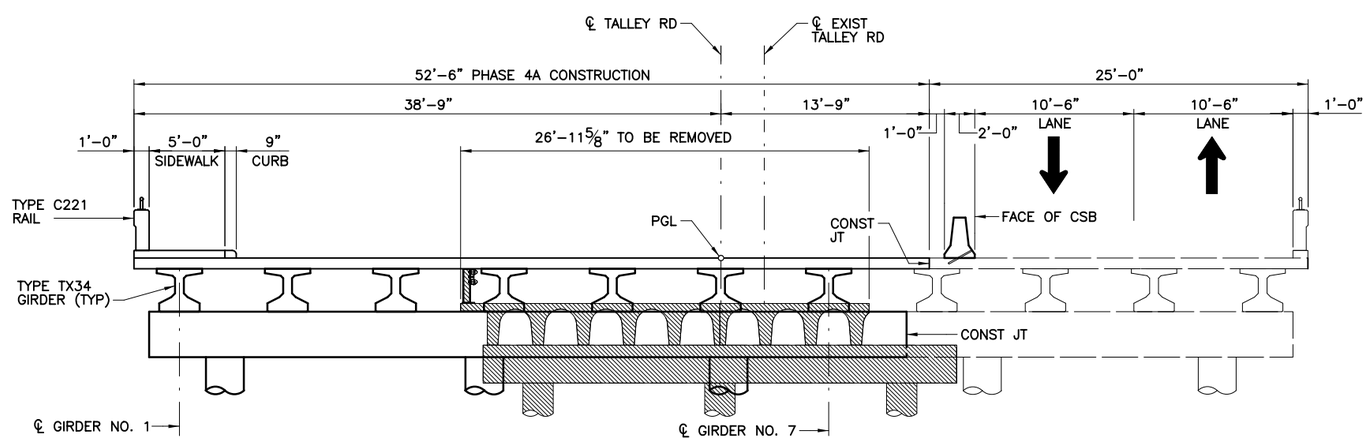

CONSTRUCTION SEQUENCE PHASE 4A

PRELIMINARY

90% SUBMITTAL
FOR INTERIM REVIEW ONLY
NOT FOR CONSTRUCTION, BIDDING, OR PERMIT PURPOSES.

CP&Y

ENGINEER KELLY HO
P.E. No. 112947 DATE 2/21/2017

BEXAR COUNTY
PUBLIC WORKS DEPARTMENT

NO	DATE	DESCRIPTION	DWG	CHK

REVISIONS

CP&Y
12500 SAN PEDRO AVENUE, SUITE 450
SAN ANTONIO, TEXAS 78216
TEL (210) 494-8004
FAX (210) 494-8286
T.B.P.E. FIRM # 1741

TALLEY ROAD

CONSTRUCTION SEQUENCE
MEDIO CREEK BRIDGE

PROJECT NUMBER:		SHEET NO.	
0849-01-046		384	
DESIGNED BY:	KH	ROADWAY/HIGHWAY:	
CHECKED BY:	CPY	TALLEY ROAD	
DRAWN BY:	CPY	STATE	COUNTY
CHECKED BY:	CPY	TEXAS	BEXAR

SHEET 1 OF 2

2/21/2017 3:09:44 PM rwebster
cpybw_ANSIB.tbl
cpypdf_ANSIB.pltcfg
pw:/Active Projects/BEXA14048.01/8.00 Plans and Drawings/8.30 Cut Sheets/8.3.07 Bridge/BEXA14048-BR-TYP-01.dgn
pw:/Active Projects/BEXA14048.01/8.00 Plans and Drawings/8.30 Cut Sheets/8.3.07 Bridge/BEXA14048-BR-TYP-01.dgn

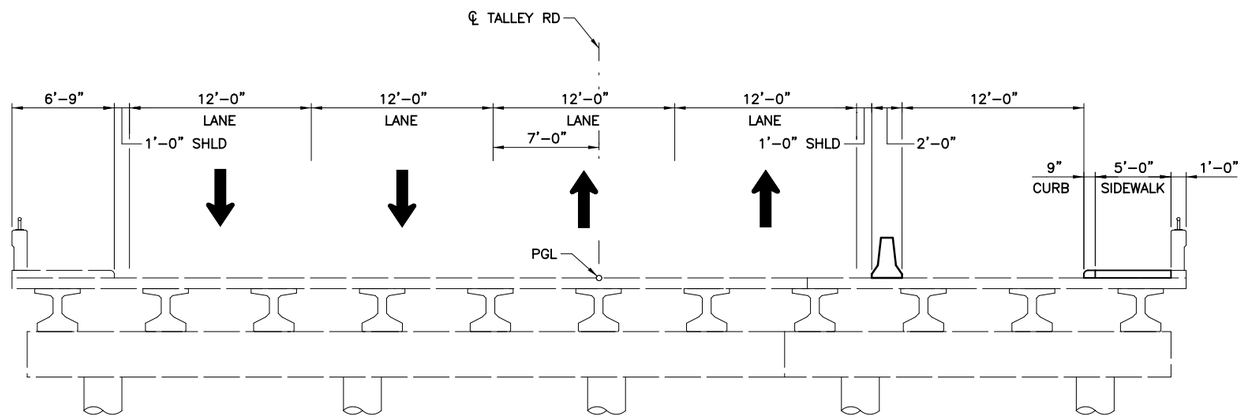

CONSTRUCTION SEQUENCE PHASE 4A ①

① SIDEWALK TO BE CONSTRUCTED AFTER THE COMPLETION OF PHASE 4A.

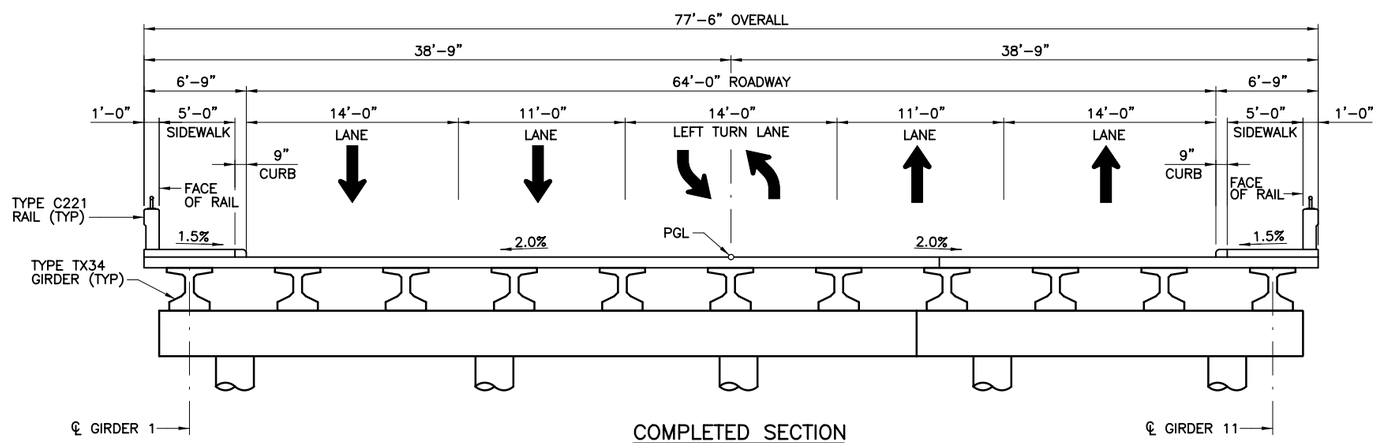

COMPLETED SECTION

PRELIMINARY

90% SUBMITTAL
FOR INTERIM REVIEW ONLY
NOT FOR CONSTRUCTION, BIDDING, OR PERMIT PURPOSES.

CP&Y

ENGINEER KELLY HO
P.E. No. 112947 DATE 2/21/2017

BEXAR COUNTY
PUBLIC WORKS DEPARTMENT

NO	DATE	DESCRIPTION	DWG	CHK

REVISIONS

CP&Y
12500 SAN PEDRO AVENUE, SUITE 450
SAN ANTONIO, TEXAS 78216
TEL (210) 494-8004
FAX (210) 494-8286
T.B.P.E. FIRM # 1741

TALLEY ROAD

CONSTRUCTION SEQUENCE
MEDIO CREEK BRIDGE

PROJECT NUMBER:		SHEET NO.	
0849-01-046		385	
DESIGNED BY:	KH	ROADWAY/HIGHWAY:	
CHECKED BY:	CPY	TALLEY ROAD	
DRAWN BY:	CPY	STATE	COUNTY
CHECKED BY:	CPY	TEXAS	BEXAR

SHEET 2 OF 2

cpydw_ANSIB.tbl
cpydf_ANSIB.pltcfg
pw:/Active Projects/BEXA14048.01/8.00 Plans and Drawings/8.30 Cut Sheets/8.3.07 Bridge/BEXA14048-BR-TYP-02.dgn
2/21/2017 3:09:47 PM rwebster
pw:/Active Projects/BEXA14048.01/8.00 Plans and Drawings/8.30 Cut Sheets/8.3.07 Bridge/BEXA14048-BR-TYP-02.dgn

SUMMARY OF ESTIMATED QUANTITIES – MEDIO CREEK BRIDGE

	BID ITEM	400 6005	416 6001	416 6004	420 6013	420 6029	420 6037	422 6001	422 6013	422 6015	425 6036	432 6008	432 6033	442 6007	450 6030	454 6004	496 6010
	BID ITEM DESCRIPTION	CEM STABIL BKFL	DRILL SHAFT		CL C CONC			REINF CONC SLAB	BRIDGE SIDEWALK	APPROACH SLAB	PRESTR CONC GIRDER (TX34)	RIPRAP (CONC) (CL B) (RR8 & RR9)	RIPRAP (STONE PROTECTION) (18 IN)	STR STEEL (MISC NON–BRIDGE) (2)	RAIL (TY C221)	ARMOR JOINT (SEALED)	REMOV STR (BRIDGE 100–499 FT LENGTH)
	BRIDGE ELEMENT		(18 IN)	(36 IN)	(ABUT)	(CAP)	(COL)										
		CY	LF	LF	CY	CY	CY	SF	SF	CY	LF	CY	CY	LB	LF	LF	EA
PHASE 3A	2 – ABUTMENTS	75	23	126	26.9					40.2		10	480			46	
	2 – INTERIOR BENTS			112		23.2	10.4										
	1 – 240.00' PRESTRESSED CONCRETE I–GIRDER UNIT							6,000			954.12				253.0		
	PHASE TOTAL	75	23	238	26.9	23.2	10.4	6,000		40.2	954.12	10	480		253.0	46	
PHASE 4A	2 – ABUTMENTS	161	23	168	49.1					84.2		15	738			102	
	2 – INTERIOR BENTS			168		48.0	15.7										
	1 – 240.00' PRESTRESSED CONCRETE I–GIRDER UNIT							12,600	1,620		1,669.71			147	253.0		
	PHASE TOTAL	161	23	336	49.1	48.0	15.7	12,600	1,620	84.2	1,669.71	15	738	147	253.0	102	
PHASE 4A* (1)	2 – ABUTMENTS																
	2 – INTERIOR BENTS																
	1 – 240.00' PRESTRESSED CONCRETE I–GIRDER UNIT								1,620					147			
	PHASE TOTAL								1,620					147			
	OVERALL TOTAL	236	46	574	76.0	71.2	26.1	18,600	3,240	124.4	2,623.83	25	1218	294	506.0	148	1

(1) NB SIDEWALK TO BE CONSTRUCTED AFTER THE COMPLETION OF PHASE 4A.

(2) QUANTITY FOR BRIDGE SIDEWALK EXPANSION JOINT COVER PLATE.

BEARING SEAT ELEVATIONS

	GIRDER 1	GIRDER 2	GIRDER 3	GIRDER 4	GIRDER 5	GIRDER 6	GIRDER 7	GIRDER 8	GIRDER 9	GIRDER 10	GIRDER 11
ABUT 1 (FWD)	855.475	855.618	855.761	855.904	856.046	856.189	856.048	855.905	855.761	855.618	855.475

	GIRDER 1	GIRDER 2	GIRDER 3	GIRDER 4	GIRDER 5	GIRDER 6	GIRDER 7	GIRDER 8	GIRDER 9	GIRDER 10	GIRDER 11
BENT 2 (BK)	853.975	854.118	854.261	854.404	854.547	854.690	854.548	854.405	854.262	854.118	853.975
(FWD)	853.937	854.080	854.223	854.365	854.508	854.651	854.510	854.367	854.223	854.080	853.937

	GIRDER 1	GIRDER 2	GIRDER 3	GIRDER 4	GIRDER 5	GIRDER 6	GIRDER 7	GIRDER 8	GIRDER 9	GIRDER 10	GIRDER 11
BENT 3 (BK)	852.437	852.580	852.723	852.866	853.009	853.151	853.010	852.867	852.724	852.580	852.437
(FWD)	852.399	852.542	852.684	852.827	852.970	853.113	852.972	852.828	852.685	852.542	852.398

	GIRDER 1	GIRDER 2	GIRDER 3	GIRDER 4	GIRDER 5	GIRDER 6	GIRDER 7	GIRDER 8	GIRDER 9	GIRDER 10	GIRDER 11
ABUT 4 (BK)	850.899	851.042	851.185	851.328	851.470	851.613	851.472	851.329	851.185	851.042	850.899

PRELIMINARY

90% SUBMITTAL
FOR INTERIM REVIEW ONLY
NOT FOR CONSTRUCTION, BIDDING, OR PERMIT PURPOSES.

CP&Y

ENGINEER KELLY HO
P.E. No. 112947 DATE 2/21/2017

BEXAR COUNTY
PUBLIC WORKS DEPARTMENT

NO	DATE	DESCRIPTION	DWG	CHK

REVISIONS

CP&Y
12500 SAN PEDRO AVENUE, SUITE 450
SAN ANTONIO, TEXAS 78216
TEL (210) 494–8004
FAX (210) 494–8286
T.B.P.E. FIRM # 1741

TALLEY ROAD

ESTIMATED QUANTITIES
AND BEARING SEAT ELEVATIONS
MEDIO CREEK BRIDGE

PROJECT NUMBER:		SHEET NO.
0849–01–046		386
DESIGNED BY: KH	ROADWAY/HIGHWAY:	
CHECKED BY: CPY	TALLEY ROAD	
DRAWN BY: CPY	STATE	COUNTY
CHECKED BY: CPY	TEXAS	BEXAR

SHEET 1 OF 1

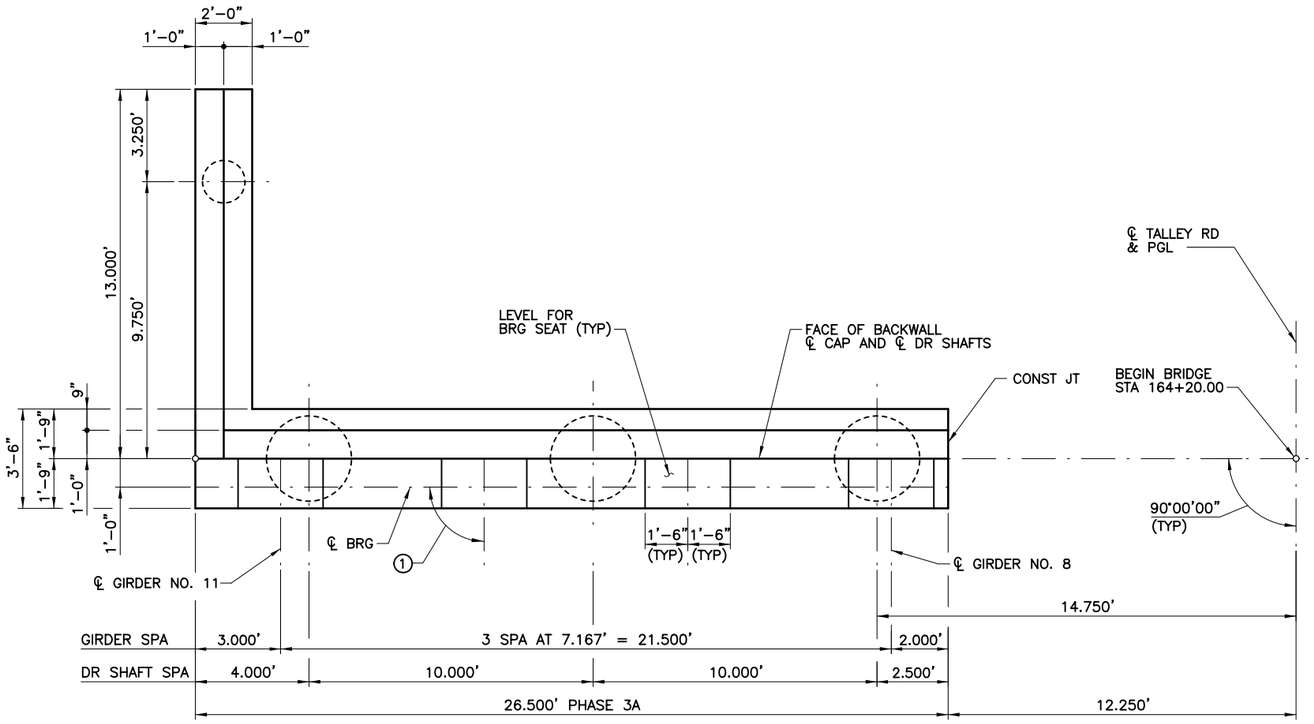

PLAN

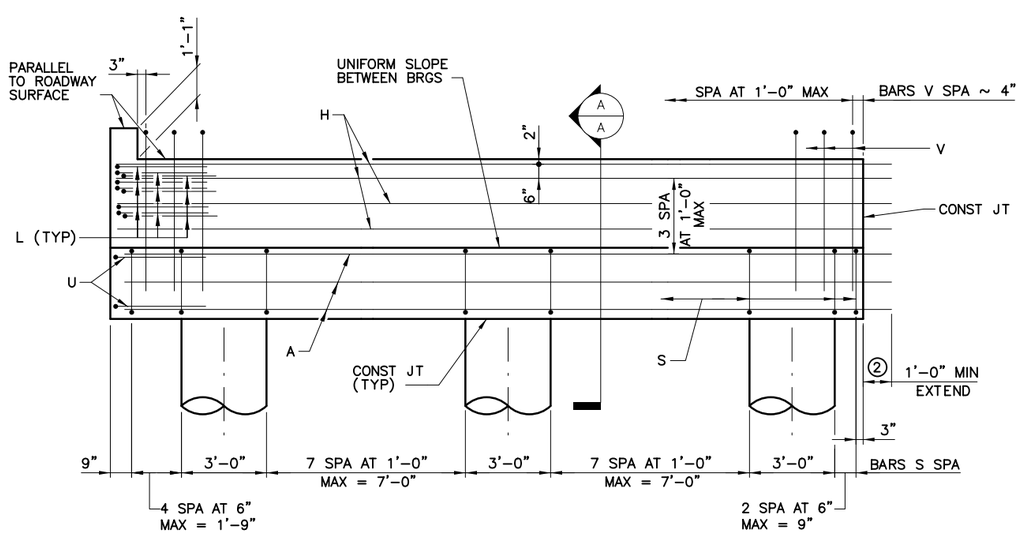

ELEVATION

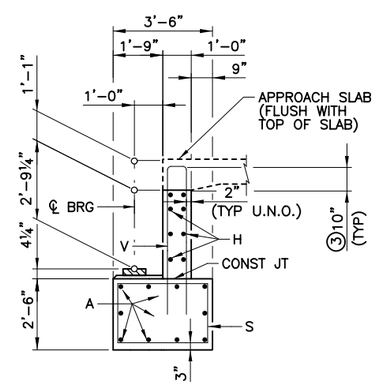

SECTION A–A

GENERAL NOTES:

1. DESIGNED ACCORDING TO 2014 AASHTO LRFD SPECIFICATIONS WITH CURRENT INTERIMS (HL93 LOADING).
2. CLASS "C" CONCRETE, f'c = 3,600 PSI.
3. ALL CAP AND WALL REINFORCING TO BE GRADE 60.
4. COVER DIMENSIONS ARE CLEAR DIMENSIONS.
5. SEE FD STANDARD FOR FOUNDATION DETAILS AND NOTES.
6. SEE MISCELLANEOUS ABUTMENT DETAILS FOR BEARING SEAT AND REINFORCING BAR DETAILS.
7. CALCULATED FOUNDATIONS LOADS: 89 TONS PER DRILLED SHAFT.

TABLE OF ESTIMATED QUANTITIES

BAR	NO.	SIZE	LENGTH	WEIGHT
A	10	#11	27'– 0"	1,435
H	8	#6	27'– 0"	324
L	9	#6	4'– 0"	54
S	24	#5	11'– 6"	288
U	2	#6	8'– 1"	24
V	26	#5	11'– 1"	301
wH1	7	#6	14'– 5"	152
wH2	10	#6	12'– 8"	190
wS	14	#4	7'–10"	73
wV	14	#5	11'–2"	163
REINFORCING STEEL			LB	3,004
CLASS "C" CONCRETE (ABUT)			CY	15.7

1. SEE GIRDER LAYOUT SHEETS FOR GIRDER ANGLE (TYP).
2. CONTRACTOR TO SPLICE BARS A AND H BY WELDING IN ACCORDANCE WITH ITEM 448, "STRUCTURAL FIELD WELDING" OR BY USE OF MECHANICAL COUPLERS IN ACCORDANCE WITH ITEM 440.2.8 "MECHANICAL COUPLERS".
3. INCREASE AS REQUIRED TO MAINTAIN 3" CLEAR FROM FINISHED GRADE.

PRELIMINARY

90% SUBMITTAL
FOR INTERIM REVIEW ONLY
NOT FOR CONSTRUCTION, BIDDING, OR PERMIT PURPOSES.

CP&Y

ENGINEER KELLY HO
P.E. No. 112947 DATE 2/21/2017

BEXAR COUNTY
PUBLIC WORKS DEPARTMENT

NO	DATE	DESCRIPTION	DWG	CHK

REVISIONS

CP&Y
12500 SAN PEDRO AVENUE, SUITE 450
SAN ANTONIO, TEXAS 78216
TEL (210) 494–8004
FAX (210) 494–8286
T.B.P.E. FIRM # 1741

TALLEY ROAD

ABUTMENT NO. 1 DETAILS PHASE 3A

PROJECT NUMBER:			SHEET NO.
0849–01–046			387
DESIGNED BY:	KH	ROADWAY/HIGHWAY:	
CHECKED BY:	CPY	TALLEY ROAD	
DRAWN BY:	CPY	STATE	COUNTY
CHECKED BY:	CPY	TEXAS	BEXAR

SHEET 1 OF 1

cpybw_ANSIB.tbl
cpypdf_ANSIB.pltcfg
pw:/Active Projects/BEXA14048.01/8.00 Plans and Drawings/8.30 Cut Sheets/8.3.07 Bridge/BEXA14048-BR-AB01-01.dgn
2/21/2017 3:10:16 PM rwebster
pw:/Active Projects/BEXA14048.01/8.00 Plans and Drawings/8.30 Cut Sheets/8.3.07 Bridge/BEXA14048-BR-AB01-01.dgn

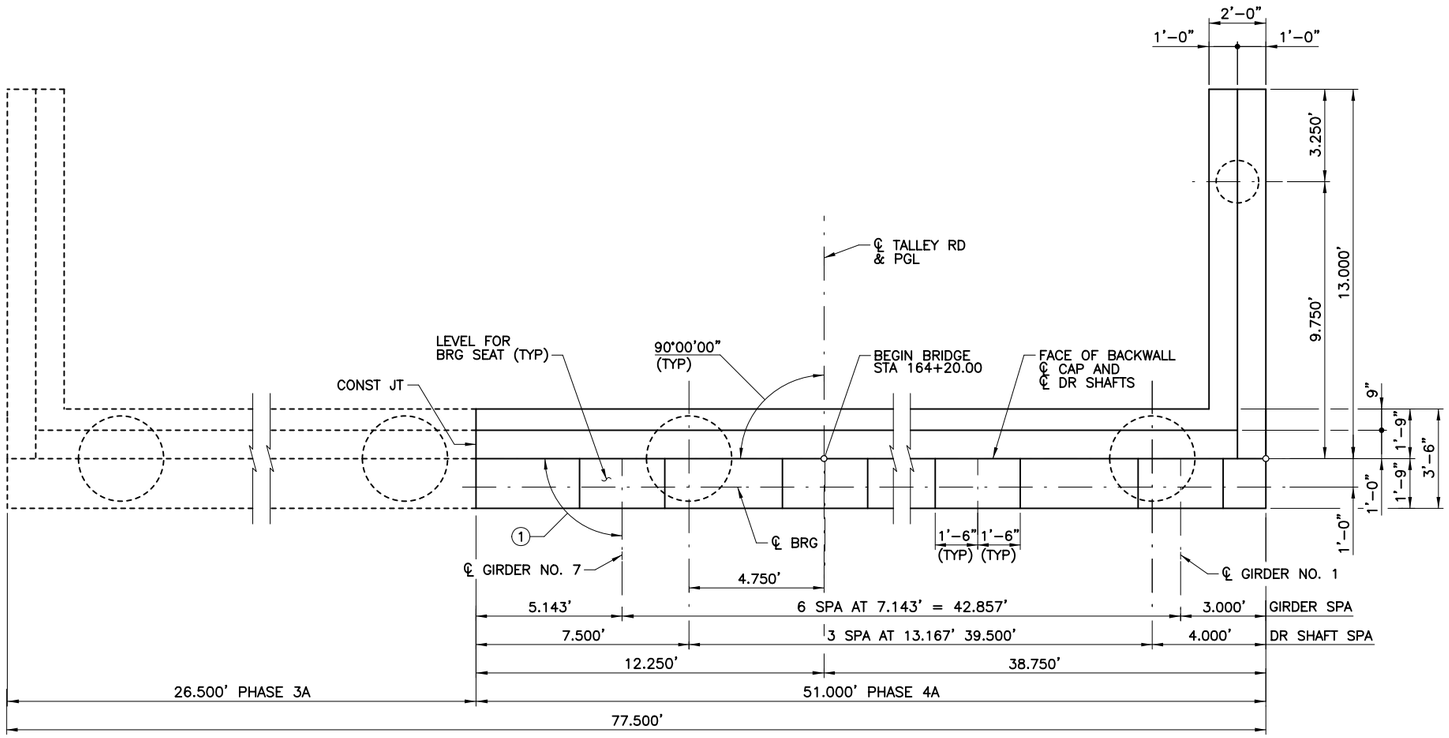

PLAN

TABLE OF ESTIMATED QUANTITIES

BAR	NO.	SIZE	LENGTH	WEIGHT
A	10	#11	49'- 6"	2,630
H	8	#6	49'- 6"	595
L	9	#6	4'- 0"	54
S	54	#5	11'- 6"	648
U	2	#6	8'- 1"	24
V	51	#5	11'- 1"	590
wH1	7	#6	14'- 5"	152
WH2	10	#6	12'- 8"	190
wS	14	#4	7'-10"	73
wV	14	#5	11'- 2"	163
REINFORCING STEEL			LB	5,119
CLASS "C" CONCRETE (ABUT)			CY	26.8

GENERAL NOTES:

1. DESIGNED ACCORDING TO 2014 AASHTO LRFD SPECIFICATIONS WITH CURRENT INTERIMS (HL93 LOADING).
2. CLASS "C" CONCRETE, f'c = 3,600 PSI.
3. ALL CAP AND WALL REINFORCING TO BE GRADE 60.
4. COVER DIMENSIONS ARE CLEAR DIMENSIONS.
5. SEE FD STANDARD FOR FOUNDATION DETAILS AND NOTES.
6. SEE MISCELLANEOUS ABUTMENT DETAILS FOR WINGWALL, BEARING SEAT AND REINFORCING BAR DETAILS.
7. SEE IGSK STANDARD FOR SHEAR KEY DETAILS BETWEEN GIRDER NO. 1 AND GIRDER NO. 2.
8. CALCULATED FOUNDATIONS LOADS: 89 TONS PER DRILLED SHAFT.

1. SEE GIRDER LAYOUT SHEETS FOR GIRDER ANGLE (TYP).
2. CONTRACTOR TO SPLICE BARS A AND H BY WELDING IN ACCORDANCE WITH ITEM 448, "STRUCTURAL FIELD WELDING" OR BY USE OF MECHANICAL COUPLERS IN ACCORDANCE WITH ITEM 440.2.8 "MECHANICAL COUPLERS".
3. INCREASE AS REQUIRED TO MAINTAIN 3" CLEAR FROM FINISHED GRADE.

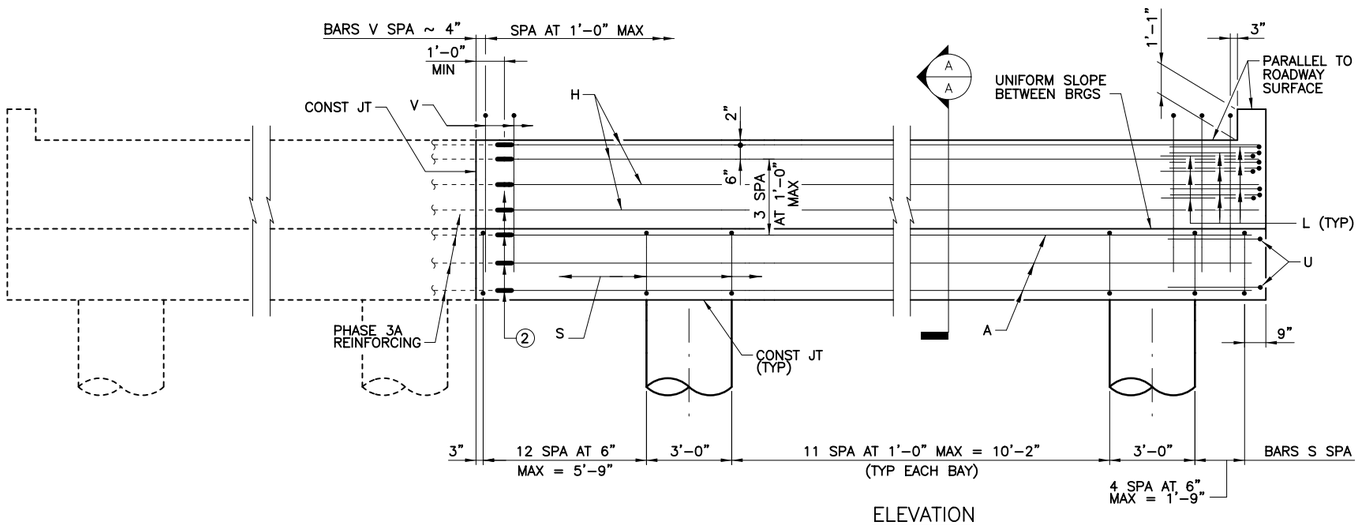

ELEVATION

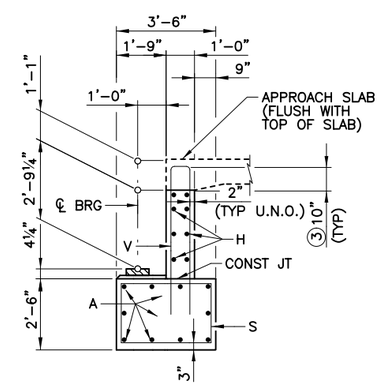

SECTION A-A

PRELIMINARY

90% SUBMITTAL
FOR INTERIM REVIEW ONLY
NOT FOR CONSTRUCTION, BIDDING, OR PERMIT PURPOSES.

CP&Y

ENGINEER KELLY HO
P.E. No. 112947 DATE 2/21/2017

BEXAR COUNTY
PUBLIC WORKS DEPARTMENT

NO	DATE	DESCRIPTION	DWG	CHK

REVISIONS

CP&Y
12500 SAN PEDRO AVENUE, SUITE 450
SAN ANTONIO, TEXAS 78216
TEL (210) 494-8004
FAX (210) 494-8286
T.B.P.E. FIRM # 1741

TALLEY ROAD

ABUTMENT NO. 1 DETAILS PHASE 4A

PROJECT NUMBER:		SHEET NO.
0849-01-046		388
DESIGNED BY: KH	ROADWAY/HIGHWAY:	
CHECKED BY: CPY	TALLEY ROAD	
DRAWN BY: CPY	STATE	COUNTY
CHECKED BY: CPY	TEXAS	BEXAR

SHEET 1 OF 1

2/21/2017 3:10:24 PM rwebster pw:/Active Projects/BEXA14048.01/8.00 Plans and Drawings/8.30 Cut Sheets/8.3.07 Bridge/BEXA14048-BR-AB02-02.dgn
cpybw_ANSIB.tbl
cpypdf_ANSIB.pltcfg
pw:/Active Projects/BEXA14048.01/8.00 Plans and Drawings/8.30 Cut Sheets/8.3.07 Bridge/BEXA14048-BR-AB02-02.dgn

TABLE OF ESTIMATED QUANTITIES

BAR	NO.	SIZE	LENGTH	WEIGHT
A	10	#11	26'– 3"	1,395
H	8	#6	26'– 3"	315
S	23	#5	11'– 6"	276
V	26	#5	11'– 1"	301
REINFORCING STEEL			LB	2,287
CLASS "C" CONCRETE (ABUT)			CY	11.2

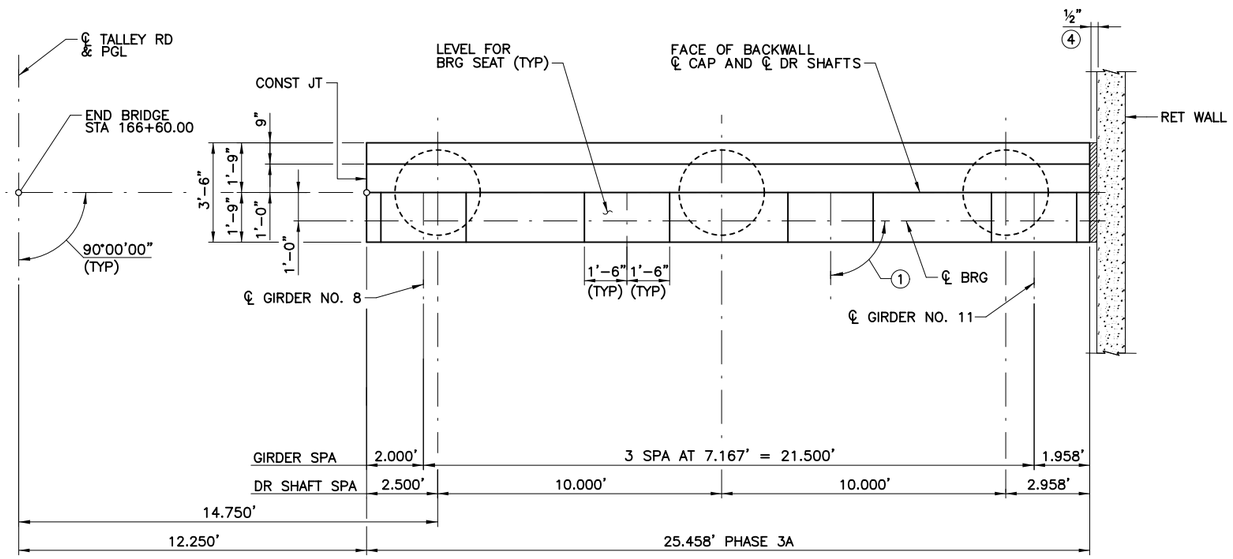

PLAN

GENERAL NOTES:

1. DESIGNED ACCORDING TO 2014 AASHTO LRFD SPECIFICATIONS WITH CURRENT INTERIMS (HL93 LOADING).
2. CLASS "C" CONCRETE, f'c = 3,600 PSI.
3. ALL CAP AND WALL REINFORCING TO BE GRADE 60.
4. COVER DIMENSIONS ARE CLEAR DIMENSIONS.
5. SEE FD STANDARD FOR FOUNDATION DETAILS AND NOTES.
6. SEE MISCELLANEOUS ABUTMENT DETAILS FOR BEARING SEAT AND REINFORCING BAR DETAILS.
7. CALCULATED FOUNDATIONS LOADS: 89 TONS PER DRILLED SHAFT.

① SEE GIRDER LAYOUT SHEETS FOR GIRDER ANGLE (TYP).

② CONTRACTOR TO SPLICE BARS A AND H BY WELDING IN ACCORDANCE WITH ITEM 448, "STRUCTURAL FIELD WELDING" OR BY USE OF MECHANICAL COUPLERS IN ACCORDANCE WITH ITEM 440.2.8 "MECHANICAL COUPLERS".

③ INCREASE AS REQUIRED TO MAINTAIN 3" CLEAR FROM FINISHED GRADE.

④ ½" PREFORMED BITUMINOUS FIBER MATERIAL.

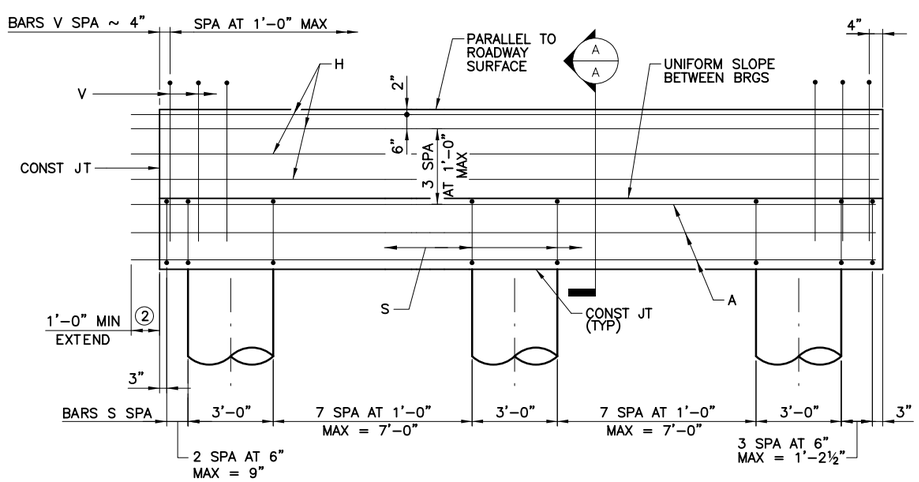

ELEVATION

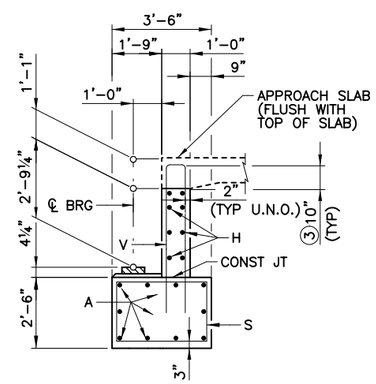

SECTION A–A

PRELIMINARY

90% SUBMITTAL
FOR INTERIM REVIEW ONLY
NOT FOR CONSTRUCTION, BIDDING, OR PERMIT PURPOSES.

CP&Y

ENGINEER KELLY HO
P.E. No. 112947 DATE 2/21/2017

BEXAR COUNTY
PUBLIC WORKS DEPARTMENT

NO	DATE	DESCRIPTION	DWG	CHK

REVISIONS

CP&Y
12500 SAN PEDRO AVENUE, SUITE 450
SAN ANTONIO, TEXAS 78216
TEL (210) 494–8004
FAX (210) 494–8286
T.B.P.E. FIRM # 1741

TALLEY ROAD

ABUTMENT NO. 4
DETAILS
PHASE 3A

PROJECT NUMBER:			SHEET NO.
0849–01–046			389
DESIGNED BY:	KH	ROADWAY/HIGHWAY:	
CHECKED BY:	CPY	TALLEY ROAD	
DRAWN BY:	CPY	STATE	COUNTY
CHECKED BY:	CPY	TEXAS	BEXAR

SHEET 1 OF 1

TABLE OF ESTIMATED QUANTITIES

BAR	NO.	SIZE	LENGTH	WEIGHT
A	10	#11	48'–10"	2,595
H	8	#6	48'–10"	587
S	53	#5	11'– 6"	636
V	51	#5	11'– 1"	590
REINFORCING STEEL			LB	4,408
CLASS "C" CONCRETE (ABUT)			CY	22.3

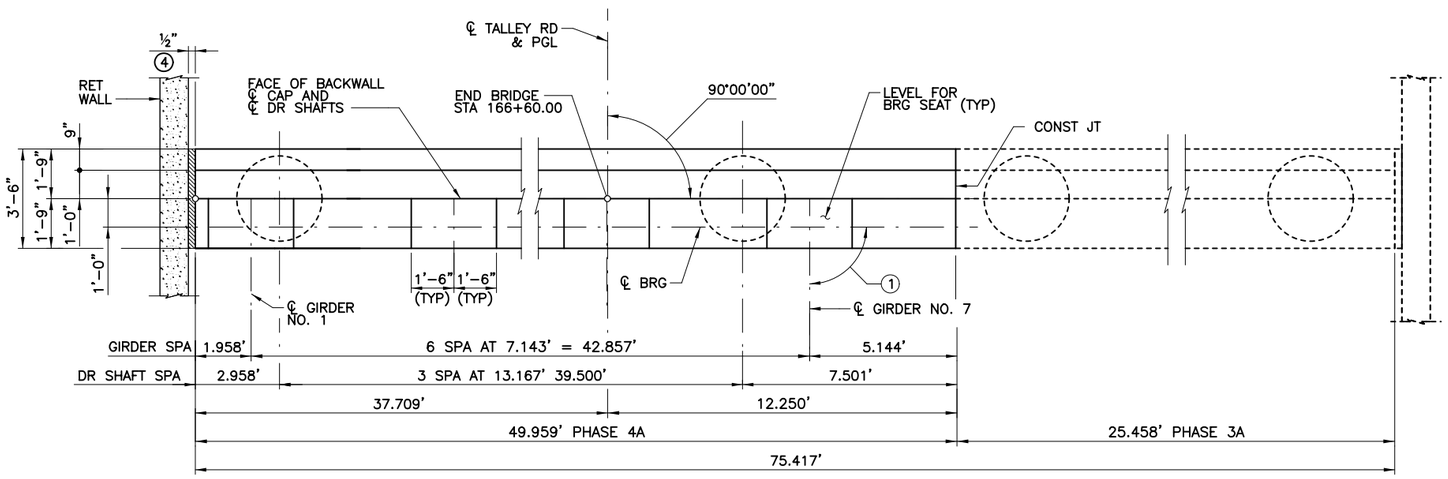

PLAN

GENERAL NOTES:

1. DESIGNED ACCORDING TO 2014 AASHTO LRFD SPECIFICATIONS WITH CURRENT INTERIMS (HL93 LOADING).
2. CLASS "C" CONCRETE, f'c = 3,600 PSI.
3. ALL CAP AND WALL REINFORCING TO BE GRADE 60.
4. COVER DIMENSIONS ARE CLEAR DIMENSIONS.
5. SEE FD STANDARD FOR FOUNDATION DETAILS AND NOTES.
6. SEE MISCELLANEOUS ABUTMENT DETAILS FOR BEARING SEAT AND REINFORCING BAR DETAILS.
7. SEE IGSK STANDARD FOR SHEAR KEY DETAILS BETWEEN GIRDER NO. 1 AND GIRDER NO. 2.
8. CALCULATED FOUNDATION LOADS: 89 TONS PER DRILLED SHAFT.

1. SEE GIRDER LAYOUT SHEETS FOR GIRDER ANGLE (TYP).
2. CONTRACTOR TO SPLICE BARS A AND H BY WELDING IN ACCORDANCE WITH ITEM 448, "STRUCTURAL FIELD WELDING" OR BY USE OF MECHANICAL COUPLERS IN ACCORDANCE WITH ITEM 440.2.8 "MECHANICAL COUPLERS".
3. INCREASE AS REQUIRED TO MAINTAIN 3" CLEAR FROM FINISHED GRADE.
4. ½" PREFORMED BITUMINOUS FIBER MATERIAL.

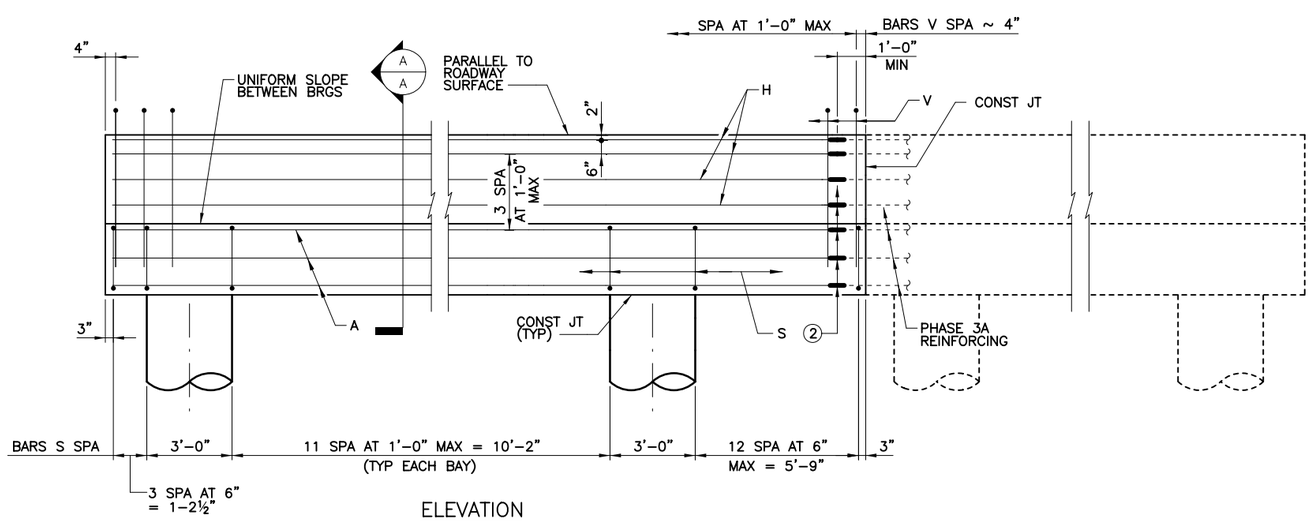

ELEVATION

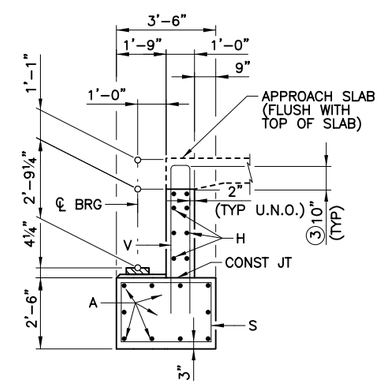

SECTION A–A

PRELIMINARY

90% SUBMITTAL
FOR INTERIM REVIEW ONLY
NOT FOR CONSTRUCTION, BIDDING, OR PERMIT PURPOSES.

CP&Y

ENGINEER KELLY HO
P.E. No. 112947 DATE 2/21/2017

BEXAR COUNTY
PUBLIC WORKS DEPARTMENT

NO	DATE	DESCRIPTION	DWG	CHK

REVISIONS

CP&Y
12500 SAN PEDRO AVENUE, SUITE 450
SAN ANTONIO, TEXAS 78216
TEL (210) 494–8004
FAX (210) 494–8286
T.B.P.E. FIRM # 1741

TALLEY ROAD

ABUTMENT NO. 4
DETAILS
PHASE 4A

PROJECT NUMBER:		SHEET NO.	
0849–01–046		390	
DESIGNED BY:	KH	ROADWAY/HIGHWAY:	
CHECKED BY:	CPY	TALLEY ROAD	
DRAWN BY:	CPY	STATE	COUNTY
CHECKED BY:	CPY	TEXAS	BEXAR

SHEET 1 OF 1

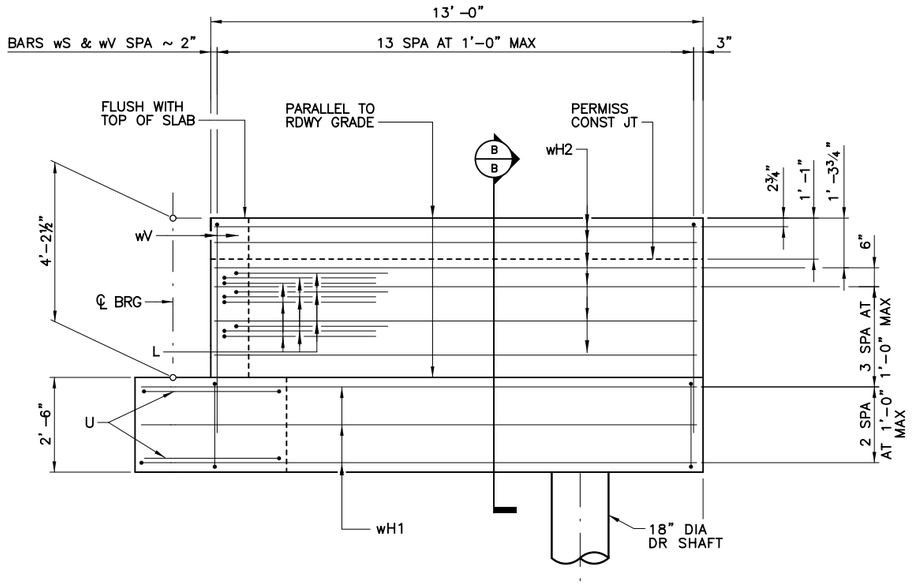

WINGWALL ELEVATIONS

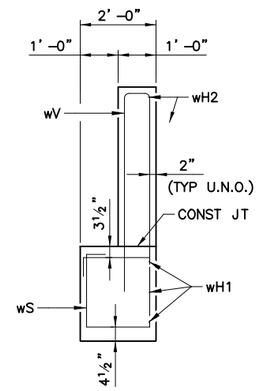

SECTION B-B

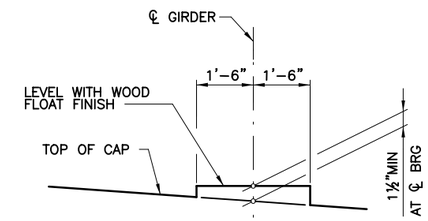

BEARING SEAT DETAIL

(BEARING SURFACE SHALL BE CLEAN AND FREE OF ALL LOOSE MATERIAL BEFORE PLACING BEARING PAD.)

GENERAL NOTES:

1. REINFORCING BAR DIMENSIONS ARE OUT-TO-OUT OF BAR.
2. COVER DIMENSIONS ARE CLEAR DIMENSIONS.
3. WINGWALL FOUNDATION LOAD: 10 TONS/DR SHAFT

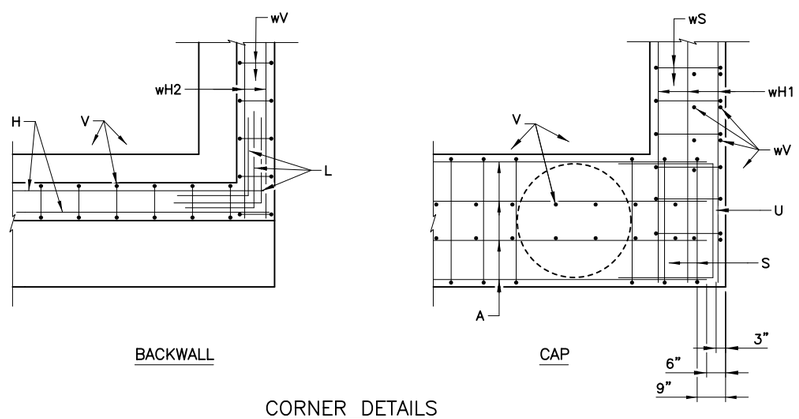

CORNER DETAILS

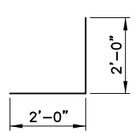

BARS L

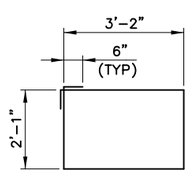

BARS S

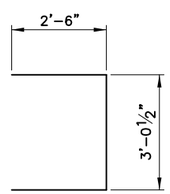

BARS U

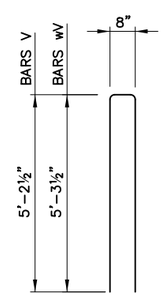

BARS V AND wV

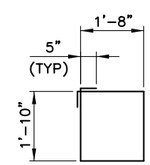

BARS wS

PRELIMINARY

90% SUBMITTAL
FOR INTERIM REVIEW ONLY
NOT FOR CONSTRUCTION, BIDDING, OR PERMIT PURPOSES.

CP&Y

ENGINEER KELLY HO
P.E. No. 112947 DATE 2/21/2017

BEXAR COUNTY
PUBLIC WORKS DEPARTMENT

NO	DATE	DESCRIPTION	DWG	CHK

REVISIONS

CP&Y
12500 SAN PEDRO AVENUE, SUITE 450
SAN ANTONIO, TEXAS 78216
TEL (210) 494-8004
FAX (210) 494-8286
T.B.P.E. FIRM # 1741

TALLEY ROAD

MISCELLANEOUS ABUTMENT DETAILS

PROJECT NUMBER:			SHEET NO.
0849-01-046			391
DESIGNED BY:	KH	ROADWAY/HIGHWAY:	
CHECKED BY:	CPY	TALLEY ROAD	
DRAWN BY:	CPY	STATE	COUNTY
CHECKED BY:	CPY	TEXAS	BEXAR

SHEET 1 OF 1

cpybw_ANSIB.tbl
cpypdf_ANSIB.pltcfg
pw:/Active Projects/BEXA14048.01/8.00 Plans and Drawings/8.30 Cut Sheets/8.3.07 Bridge/BEXA14048-BR-AB05-05.dgn
2/21/2017 3:10:40 PM rwebster
pw:/Active Projects/BEXA14048.01/8.00 Plans and Drawings/8.30 Cut Sheets/8.3.07 Bridge/BEXA14048-BR-AB05-05.dgn

TABLE OF COLUMN QUANTITIES ⑤

BENT	"H"	CLASS "C" CONCRETE (COLUMN)	BARS V 20 – #9		BARS Z 2 – #4 SPIRALS		TOTAL ESTIMATED QUANTITIES	
							REINF STEEL	CLASS "C" CONCRETE
NO.	HEIGHT	CY	LENGTH	WEIGHT	LENGTH	WEIGHT	LB	CY
2	14'	7.3	16'– 8"	1,134	465'– 0"	621	4,326	18.9
3	6'	3.1	8'– 8"	590	212'– 5"	284	3,445	14.7

TABLE OF CAP QUANTITIES ③

BAR	NO.	SIZE	LENGTH	WEIGHT
A	6	#11	26'– 3"	837
B	5	#11	25'– 6"	677
D	2	1¼" D	1'– 8"	28
S	39	#6	14'– 8"	859
T	6	#5	25'– 6"	160
U	1	#5	9'– 8"	10
REINFORCING STEEL			LB	2,571
CLASS "C" CONCRETE (CAP)			CY	11.6

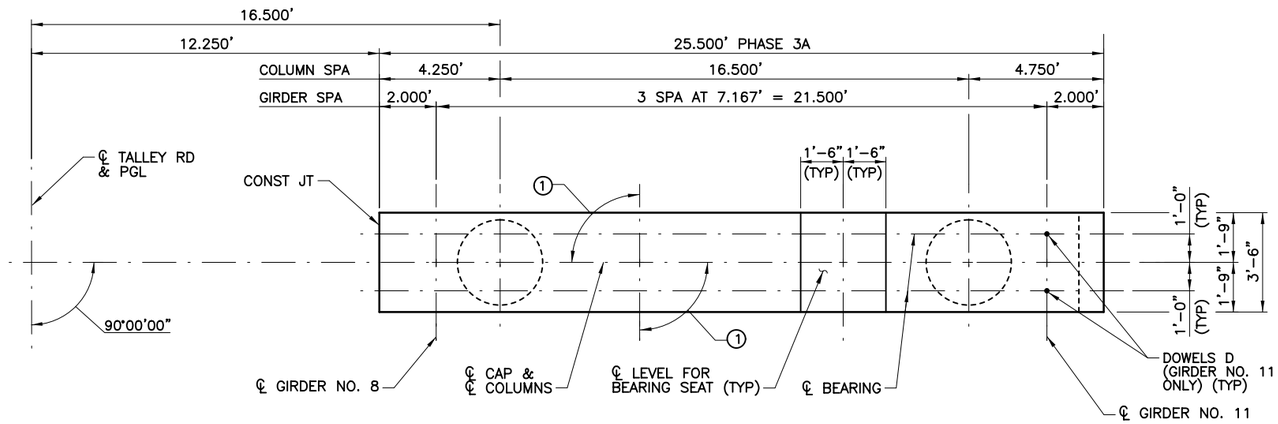

PLAN

① SEE GIRDER LAYOUT FOR GIRDER ANGLE (TYP).

② CONTRACTOR TO SPLICE BARS A, B AND T BY WELDING IN ACCORDANCE WITH ITEM 448, "STRUCTURAL FIELD WELDING" OR BY USE OF MECHANICAL COUPLERS IN ACCORDANCE WITH ITEM 440.2.8 "MECHANICAL COUPLERS".

③ QUANTITIES SHOWN ARE FOR ONE BENT ONLY.

④ MEASURED PARALLEL TO TOP OF CAP CROSS SLOPE.

⑤ FOR EACH LINEAR FOOT VARIATION IN "H" VALUE, MAKE THE FOLLOWING ADJUSTMENTS:
BARS V LENGTH = 1'–0"
BARS Z LENGTH = 31'–5"
REINFORCING STEEL = 110 LB
CLASS "C" CONC (COL) = 0.5 CY

GENERAL NOTES:

1. DESIGNED ACCORDING TO 2014 AASHTO LRFD SPECIFICATIONS WITH CURRENT INTERIMS (HL93 LOADING).
2. CLASS "C" CONCRETE, f'c = 3,600 PSI.
3. ALL CAP AND COLUMN REINFORCING TO BE GRADE 60.
4. COVER DIMENSIONS ARE CLEAR DIMENSIONS. REINFORCING BAR DIMENSIONS ARE OUT–TO–OUT OF BAR.
5. CALCULATED FOUNDATION LOADS:
BENT NO. 2 = 219 TONS/DRILLED SHAFT
BENT NO. 3 = 214 TONS/DRILLED SHAFT.

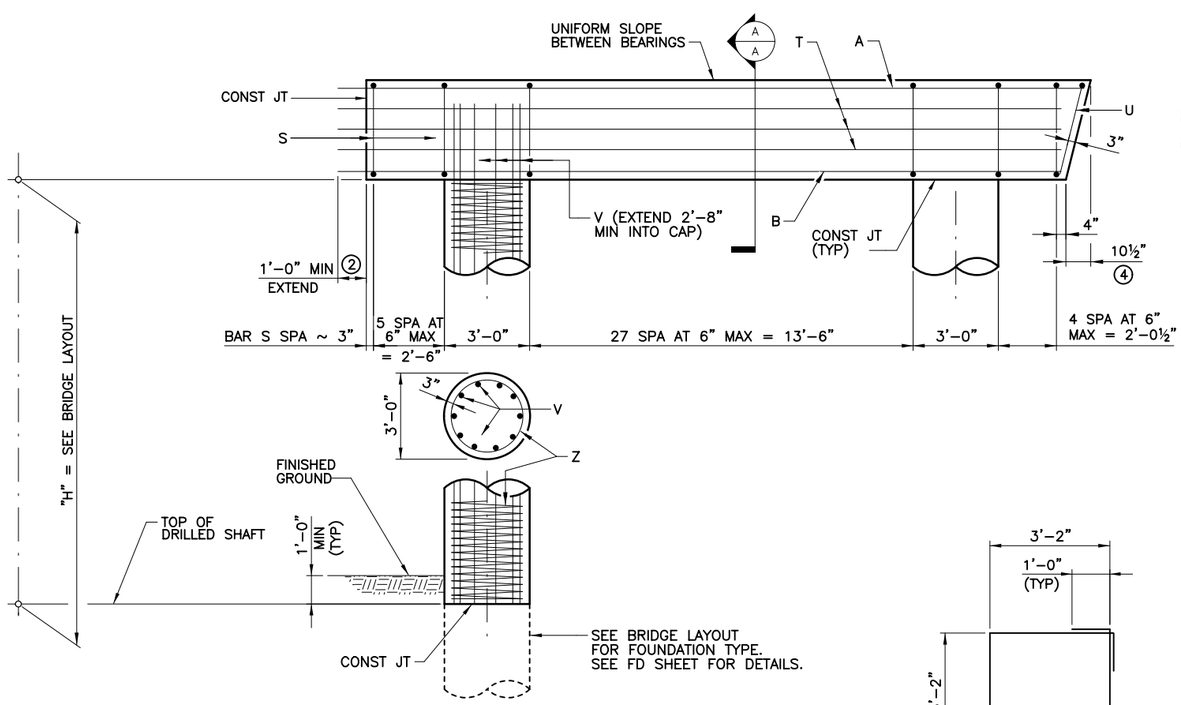

ELEVATION

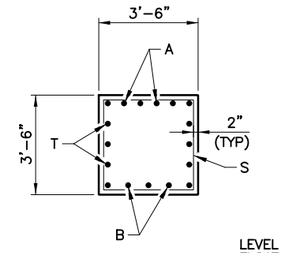

SECTION A–A

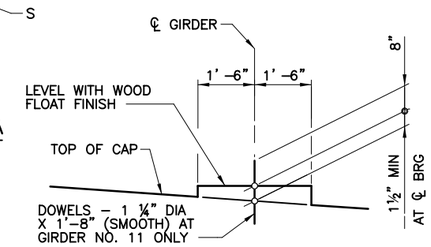

BEARING SEAT DETAILS

(BEARING SURFACE SHALL BE CLEAN AND FREE OF ALL LOOSE MATERIAL BEFORE PLACING BEARING PAD.)

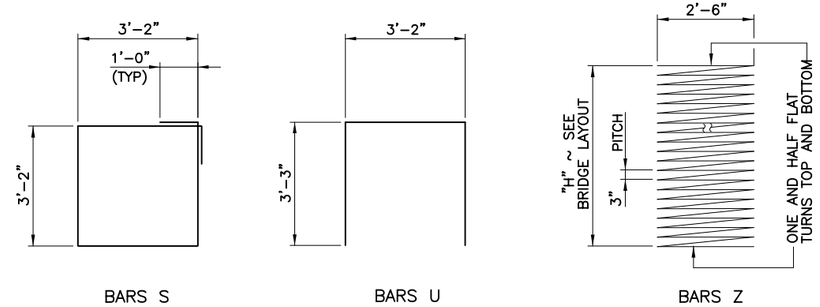

BARS S BARS U BARS Z

PRELIMINARY

90% SUBMITTAL
FOR INTERIM REVIEW ONLY
NOT FOR CONSTRUCTION, BIDDING, OR PERMIT PURPOSES.

CP&Y

ENGINEER KELLY HO
P.E. No. 112947 DATE 2/21/2017

BEXAR COUNTY
PUBLIC WORKS DEPARTMENT

NO	DATE	DESCRIPTION	DWG	CHK

REVISIONS

CP&Y
12500 SAN PEDRO AVENUE, SUITE 450
SAN ANTONIO, TEXAS 78216
TEL (210) 494–8004
FAX (210) 494–8286
T.B.P.E. FIRM # 1741

TALLEY ROAD

INTERIOR BENT
NOS. 2 & 3 DETAILS
PHASE 3A

PROJECT NUMBER:		SHEET NO.	
0849–01–046		392	
DESIGNED BY:	KH	ROADWAY/HIGHWAY:	
CHECKED BY:	CPY	TALLEY ROAD	
DRAWN BY:	CPY	STATE	COUNTY
CHECKED BY:	CPY	TEXAS	BEXAR

SHEET 1 OF 1

cpydw_ANSIB.tbl
cpydf_ANSIB.pltcfg
pw:/Active Projects/BEXA14048.01/8.00 Plans and Drawings/8.30 Cut Sheets/8.3.07 Bridge/BEXA14048-BR-IB01.dgn
2/21/2017 3:10:44 PM rwebster
pw:/Active Projects/BEXA14048.01/8.00 Plans and Drawings/8.30 Cut Sheets/8.3.07 Bridge/BEXA14048-BR-IB01.dgn

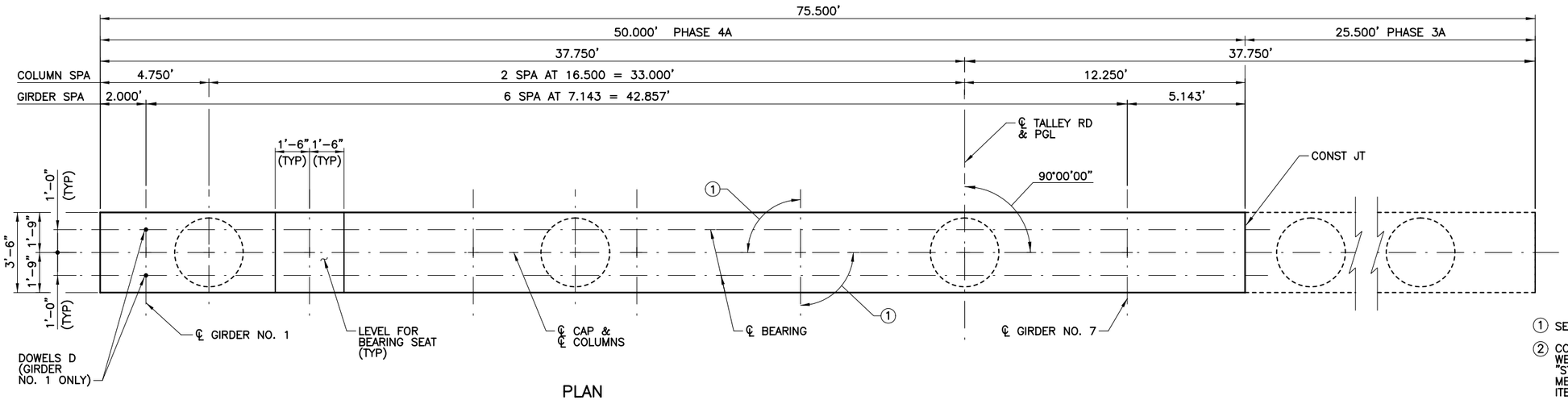

PLAN

① SEE GIRDER LAYOUT FOR GIRDER ANGLE (TYP).

② CONTRACTOR TO SPLICE BARS A, B AND T BY WELDING IN ACCORDANCE WITH ITEM 448, "STRUCTURAL FIELD WELDING" OR BY THE USE OF MECHANICAL COUPLERS IN ACCORDANCE WITH ITEM 440.2.8 "MECHANICAL COUPLERS".

③ MEASURED PARALLEL TO TOP OF CAP CROSS SLOPE.

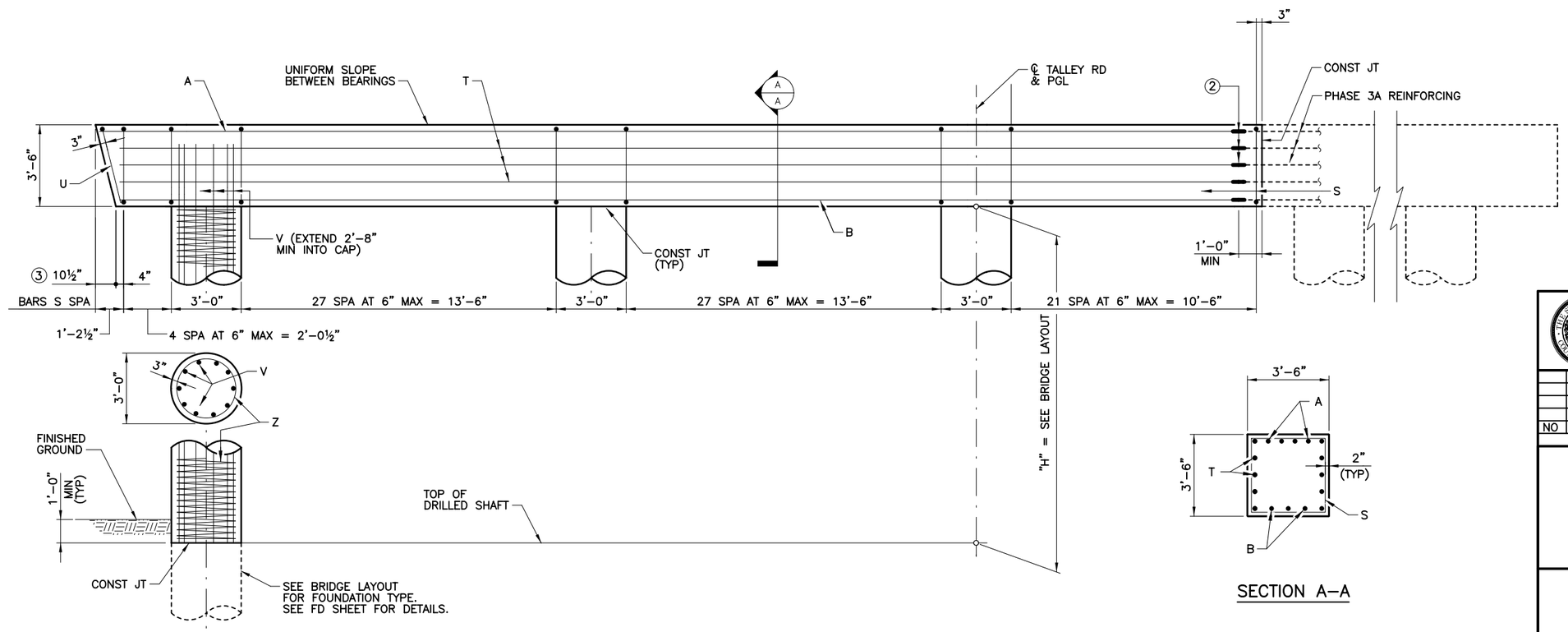

ELEVATION

SECTION A-A

PRELIMINARY

90% SUBMITTAL
FOR INTERIM REVIEW ONLY
NOT FOR CONSTRUCTION, BIDDING, OR PERMIT PURPOSES.

CP&Y

ENGINEER KELLY HO
P.E. No. 112947 DATE 2/21/2017

BEXAR COUNTY
PUBLIC WORKS DEPARTMENT

NO	DATE	DESCRIPTION	DWG	CHK

REVISIONS

CP&Y
12500 SAN PEDRO AVENUE, SUITE 450
SAN ANTONIO, TEXAS 78216
TEL (210) 494-8004
FAX (210) 494-8286
T.B.P.E. FIRM # 1741

TALLEY ROAD

INTERIOR BENT NOS. 2 & 3 DETAILS PHASE 4A

PROJECT NUMBER:		SHEET NO.
0849-01-046		393
DESIGNED BY: KH	ROADWAY/HIGHWAY:	
CHECKED BY: CPY	TALLEY ROAD	
DRAWN BY: CPY	STATE	COUNTY
CHECKED BY: CPY	TEXAS	BEXAR

SHEET 1 OF 2

2/21/2017 3:10:47 PM rwebster
cpydw_ANSIB.tbl
cpydf_ANSIB.pltcfg
pw:/Active Projects/BEXA14048.01/8.00 Plans and Drawings/8.30 Cut Sheets/8.3.07 Bridge/BEXA14048-BR-IB02-01.dgn

TABLE OF COLUMN QUANTITIES⑤

BENT	"H"	CLASS "C" CONCRETE (COLUMN)	BARS V 30 – #9		BARS Z 3 – #4 SPIRALS		TOTAL ESTIMATED QUANTITIES	
							REINF STEEL	CLASS "C" CONCRETE
NO.	HEIGHT	CY	LENGTH	WEIGHT	LENGTH	WEIGHT	LB	CY
2	14'	11.0	16'– 8"	1,700	465'– 0"	932	7,627	35.0
3	6'	4.7	8'– 8"	884	212'– 5"	426	6,305	28.7

TABLE OF CAP QUANTITIES④

BAR	NO.	SIZE	LENGTH	WEIGHT
A	6	#11	48'– 9"	1,554
B	5	#11	48'– 0"	1,275
D	2	1¼" D	1'– 8"	28
S	83	#6	14'– 8"	1,828
T	6	#5	48'– 0"	300
U	1	#5	9'– 8"	10
REINFORCING STEEL			LB	4,995
CLASS "C" CONCRETE (CAP)			CY	24.0

④ QUANTITIES SHOWN ARE FOR ONE BENT ONLY.

⑤ FOR EACH LINEAR FOOT VARIATION IN "H" VALUE, MAKE THE FOLLOWING ADJUSTMENTS:
BARS V LENGTH = 1'–0"
BARS Z LENGTH = 31'–5"
REINFORCING STEEL = 110 LB
CLASS "C" CONC (COL) = 0.5 CY

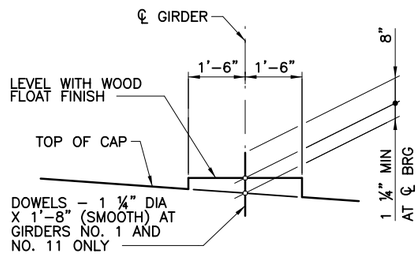

BEARING SEAT DETAIL

(BEARING SURFACE SHALL BE CLEAN AND FREE OF ALL LOOSE MATERIAL BEFORE PLACING BEARING PAD.)

GENERAL NOTES:

1. DESIGNED ACCORDING TO 2014 AASHTO LRFD SPECIFICATIONS WITH CURRENT INTERIMS (HL93 LOADING).
2. CLASS "C" CONCRETE, f'c = 3,600 PSI.
3. ALL CAP AND COLUMN REINFORCING TO BE GRADE 60.
4. SEE IGSK STANDARD FOR SHEAR KEY DETAILS BETWEEN GIRDER NO. 1 AND GIRDER NO. 2.
5. COVER DIMENSIONS ARE CLEAR DIMENSIONS. REINFORCING BAR DIMENSIONS ARE OUT–TO–OUT OF BAR.
6. CALCULATED FOUNDATION LOADS:
BENT NO. 2 = 219 TONS/DRILLED SHAFT
BENT NO. 3 = 214 TONS/DRILLED SHAFT.

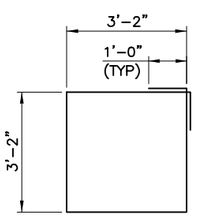

BARS S

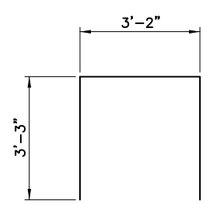

BARS U

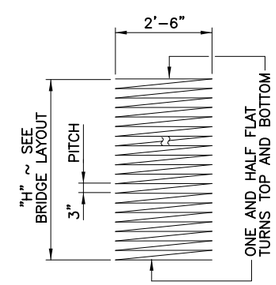

BARS Z

PRELIMINARY

90% SUBMITTAL
FOR INTERIM REVIEW ONLY
NOT FOR CONSTRUCTION, BIDDING, OR PERMIT PURPOSES.

CP&Y

ENGINEER KELLY HO
P.E. No. 112947 DATE 2/21/2017

BEXAR COUNTY
PUBLIC WORKS DEPARTMENT

NO	DATE	DESCRIPTION	DWG	CHK

REVISIONS

CP&Y
12500 SAN PEDRO AVENUE, SUITE 450
SAN ANTONIO, TEXAS 78216
TEL (210) 494–8004
FAX (210) 494–8286
T.B.P.E. FIRM # 1741

TALLEY ROAD

INTERIOR BENT
NOS. 2 & 3 DETAILS
PHASE 4A

PROJECT NUMBER:			SHEET NO.
0849–01–046			394
DESIGNED BY:	KH	ROADWAY/HIGHWAY:	
CHECKED BY:	CPY	TALLEY ROAD	
DRAWN BY:	CPY	STATE	COUNTY
CHECKED BY:	CPY	TEXAS	BEXAR

SHEET 2 OF 2

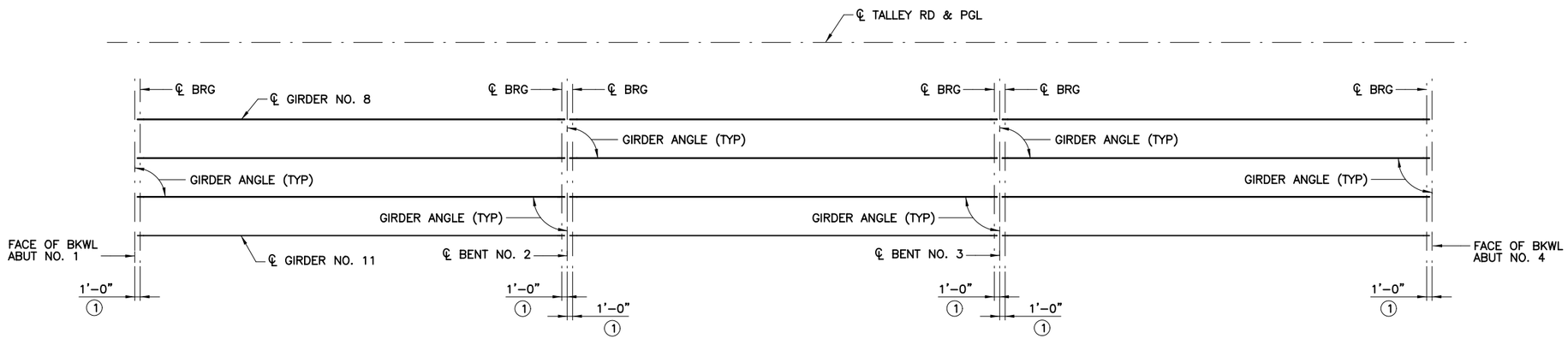

GENERAL NOTES:

1. ALL DIMENSIONS ARE IN FEET UNLESS NOTED OTHERWISE.
2. GIRDER LENGTHS SHOWN ARE BOTTOM GIRDER FLANGE LENGTHS WITH ADJUSTMENT MADE FOR GIRDER SLOPE.

(1) SEE IGEB STANDARD FOR ORIENTATION OF DIMENSIONS.

BENT REPORT

ABUT NO. 1 (N 71 17 26.83 E)

DISTANCE BETWEEN STATION LINE AND GIRDER 1 14.250 R

		GIRDER SPAC. (℄ BENT)	GIRDER ANGLE D	M	S
SPAN 1	GIRDER 8	0.000	90	0	0
	GIRDER 9	7.167	90	0	0
	GIRDER 10	7.167	90	0	0
	GIRDER 11	7.167	90	0	0
	TOTAL	21.500			

BENT NO. 2 (N 71 17 26.83 E)

DISTANCE BETWEEN STATION LINE AND GIRDER 1 14.250 R

		GIRDER SPAC. (℄ BENT)	GIRDER ANGLE D	M	S
SPAN 1	GIRDER 8	0.000	90	0	0
	GIRDER 9	7.167	90	0	0
	GIRDER 10	7.167	90	0	0
	GIRDER 11	7.167	90	0	0
	TOTAL	21.500			
SPAN 2	GIRDER 8	0.000	90	0	0
	GIRDER 9	7.167	90	0	0
	GIRDER 10	7.167	90	0	0
	GIRDER 11	7.167	90	0	0
	TOTAL	21.500			

BENT NO. 3 (N 71 17 26.83 E)

DISTANCE BETWEEN STATION LINE AND GIRDER 1 14.250 R

		GIRDER SPAC. (℄ BENT)	GIRDER ANGLE D	M	S
SPAN 2	GIRDER 8	0.000	90	0	0
	GIRDER 9	7.167	90	0	0
	GIRDER 10	7.167	90	0	0
	GIRDER 11	7.167	90	0	0
	TOTAL	21.500			
SPAN 3	GIRDER 8	0.000	90	0	0
	GIRDER 9	7.167	90	0	0
	GIRDER 10	7.167	90	0	0
	GIRDER 11	7.167	90	0	0
	TOTAL	21.500			

ABUT NO. 4 (N 71 17 26.83 E)

DISTANCE BETWEEN STATION LINE AND GIRDER 1 14.250 R

		GIRDER SPAC. (℄ BENT)	GIRDER ANGLE D	M	S
SPAN 3	GIRDER 8	0.000	90	0	0
	GIRDER 9	7.167	90	0	0
	GIRDER 10	7.167	90	0	0
	GIRDER 11	7.167	90	0	0
	TOTAL	21.500			

GIRDER REPORT

GIRDER REPORT, SPAN 1

	HORIZONTAL C-C BENT	DISTANCE C-C BRG.	TRUE DISTANCE BOT. BM. FLG.	GIRDER SLOPE
GIRDER 8	80.000	78.000	79.51	-0.0192
GIRDER 9	80.000	78.000	79.51	-0.0192
GIRDER 10	80.000	78.000	79.51	-0.0192
GIRDER 11	80.000	78.000	79.51	-0.0192

GIRDER REPORT, SPAN 2

	HORIZONTAL C-C BENT	DISTANCE C-C BRG.	TRUE DISTANCE BOT. BM. FLG.	GIRDER SLOPE
GIRDER 8	80.000	78.000	79.51	-0.0192
GIRDER 9	80.000	78.000	79.51	-0.0192
GIRDER 10	80.000	78.000	79.51	-0.0192
GIRDER 11	80.000	78.000	79.51	-0.0192

GIRDER REPORT, SPAN 3

	HORIZONTAL C-C BENT	DISTANCE C-C BRG.	TRUE DISTANCE BOT. BM. FLG.	GIRDER SLOPE
GIRDER 8	80.000	78.000	79.51	-0.0192
GIRDER 9	80.000	78.000	79.51	-0.0192
GIRDER 10	80.000	78.000	79.51	-0.0192
GIRDER 11	80.000	78.000	79.51	-0.0192

PRELIMINARY

90% SUBMITTAL
FOR INTERIM REVIEW ONLY
NOT FOR CONSTRUCTION, BIDDING, OR PERMIT PURPOSES.

CP&Y

ENGINEER KELLY HO
P.E. No. 112947 DATE 2/21/2017

BEXAR COUNTY
PUBLIC WORKS DEPARTMENT

NO	DATE	DESCRIPTION	DWG	CHK

REVISIONS

CP&Y
12500 SAN PEDRO AVENUE, SUITE 450
SAN ANTONIO, TEXAS 78216
TEL (210) 494-8004
FAX (210) 494-8286
T.B.P.E. FIRM # 1741

TALLEY ROAD

GIRDER LAYOUT
PHASE 3A

PROJECT NUMBER:	SHEET NO.
0849-01-046	395

DESIGNED BY:	KH	ROADWAY/HIGHWAY:	
CHECKED BY:	CPY	TALLEY ROAD	
DRAWN BY:	CPY	STATE	COUNTY
CHECKED BY:	CPY	TEXAS	BEXAR

SHEET 1 OF 1

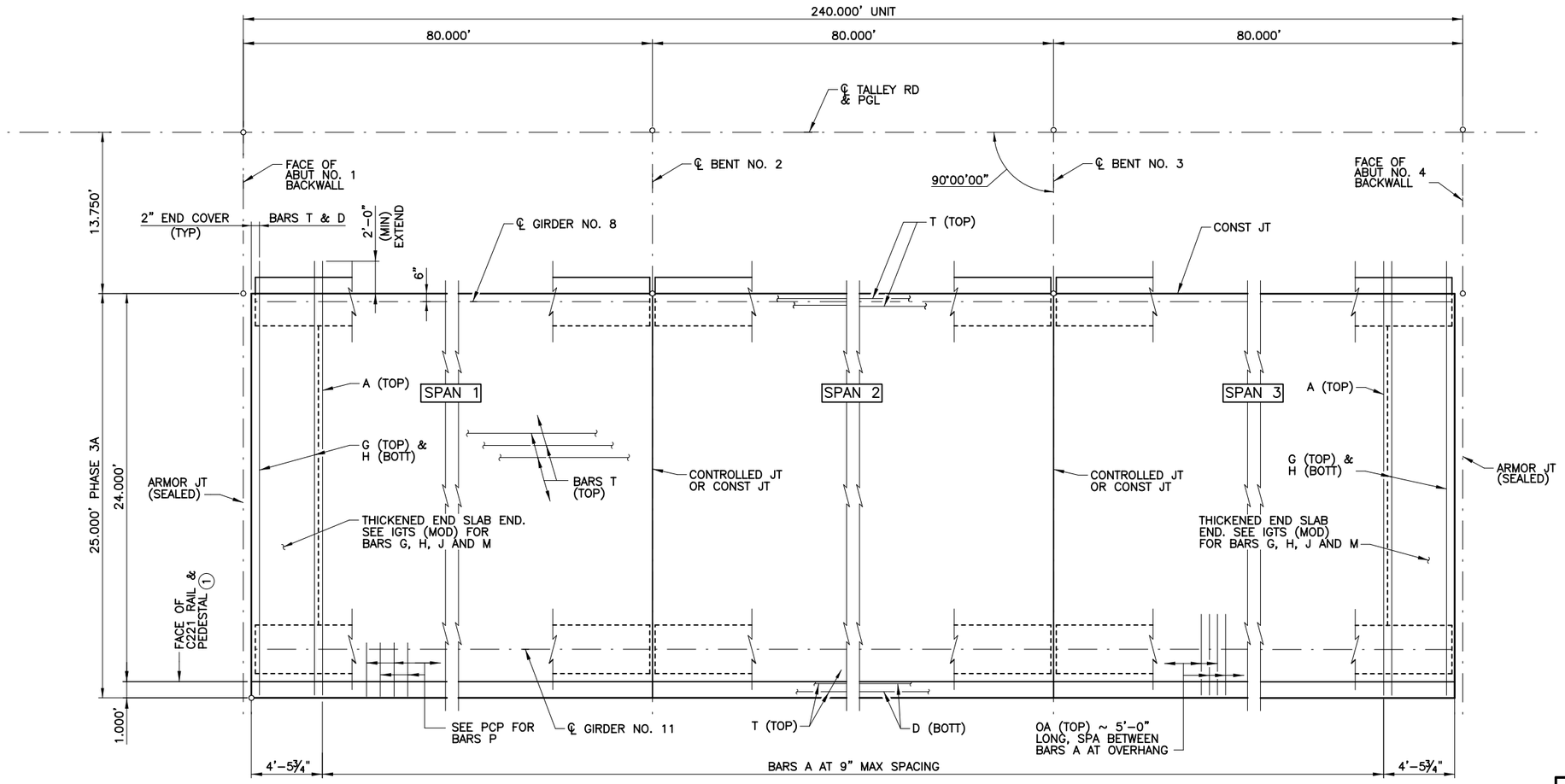

PLAN

(1) SIDEWALK AND CURB TO BE CONSTRUCTED AFTER THE COMPLETION OF PHASE 4A.

GENERAL NOTES:

1. DESIGNED ACCORDING TO 2014 AASHTO LRFD BRIDGE DESIGN SPECIFICATIONS WITH LATEST INTERIMS (7TH ED) (HL93 LOADING).
2. SEE PCP AND PCP-FAB STANDARDS FOR PANEL DETAILS NOT SHOWN.
3. SEE IGTS (MOD) STANDARD FOR BAR G AND H DETAILS. BARS EXTEND 2'-0" MIN INTO PHASE 4A CONSTRUCTION.
4. SEE IGMS STANDARD FOR MISCELLANEOUS SLAB DETAILS NOT SHOWN.
5. SEE C221 AND CTB STANDARD FOR RAIL ANCHORAGE IN SLAB.
6. SEE PMDF STANDARDS FOR DETAILS AND QUANTITY ADJUSTMENTS IF THIS OPTION IS USED.
7. COVER DIMENSIONS ARE CLEAR DIMENSIONS, UNLESS NOTED OTHERWISE.
8. PROVIDE CLASS "S" CONCRETE, f'c = 4000 psi.
9. PROVIDE GRADE 60 REINFORCING STEEL.
10. PROVIDE BAR LAPS, WHERE REQUIRED, AS FOLLOWS: UNCOATED ~ #4 = 1'-7"

SHEET 1 OF 2

PRELIMINARY

90% SUBMITTAL
FOR INTERIM REVIEW ONLY
NOT FOR CONSTRUCTION, BIDDING, OR PERMIT PURPOSES.

CP&Y

ENGINEER KELLY HO
P.E. No. 112947 DATE 2/21/2017

BEXAR COUNTY
PUBLIC WORKS DEPARTMENT

NO	DATE	DESCRIPTION	DWG	CHK

REVISIONS

CP&Y
12500 SAN PEDRO AVENUE, SUITE 450
SAN ANTONIO, TEXAS 78216
TEL (210) 494-8004
FAX (210) 494-8286
T.B.P.E. FIRM # 1741

TALLEY ROAD

240.00' PRESTRESSED CONCRETE I-GIRDER UNIT PHASE 3A

PROJECT NUMBER:			SHEET NO.
0849-01-046			396
DESIGNED BY:	KH	ROADWAY/HIGHWAY:	
CHECKED BY:	CPY	TALLEY ROAD	
DRAWN BY:	CPY	STATE	COUNTY
CHECKED BY:	CPY	TEXAS	BEXAR

cpybw_ANSIB.tbl
cpypdf_ANSIB.pltcfg
pw:/Active Projects/BEXA14048.01/8.00 Plans and Drawings/8.30 Cut Sheets/8.3.07 Bridge/BEXA14048-BR-SD01.dgn
2/21/2017 3:10:58 PM rwebster
pw:/Active Projects/BEXA14048.01/8.00 Plans and Drawings/8.30 Cut Sheets/8.3.07 Bridge/BEXA14048-BR-SD01.dgn

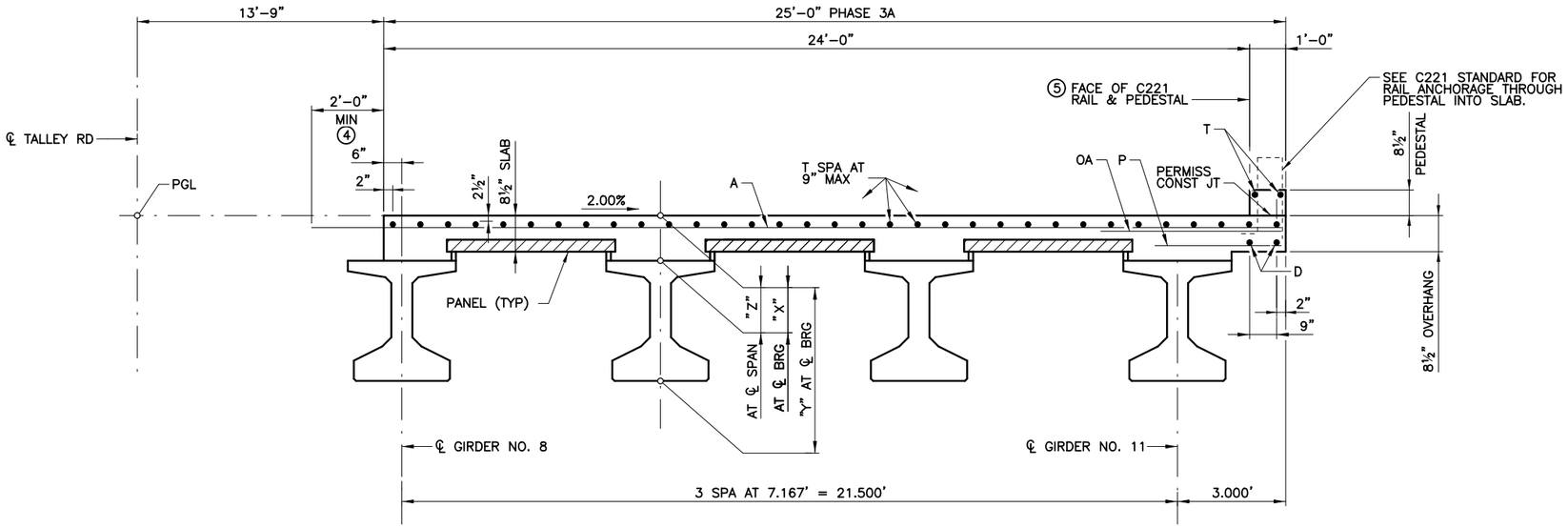

TYPICAL TRANSVERSE SECTION

① GIRDER LENGTHS SHOWN ARE BOTTOM GIRDER FLANGE LENGTHS WITH ADJUSTMENTS MADE FOR GIRDER SLOPE. SEE GIRDER LAYOUT FOR GIRDER LENGTHS.

② REINFORCING STEEL WEIGHT IS CALCULATED USING AN APPROXIMATE FACTOR OF 2.3 LBS/SF. INCLUDES REINFORCING STEEL FOR PEDESTAL.

③ THEORETICAL DIMENSION.

④ EXTEND BARS 2'-0" MIN INTO PHASE 4A CONSTRUCTION.

⑤ SIDEWALK AND CURB TO BE CONSTRUCTED AFTER THE COMPLETION OF PHASE 4A.

TABLE OF ESTIMATED QUANTITIES

SPAN	REINF CONCRETE SLAB	① PRESTR CONCRETE GIRDERS (TYPE TX34)	② REINF STEEL
NO.	SF	LF	LB
1	2,000	318.04	4,600
2	2,000	318.04	4,600
3	2,000	318.04	4,600
TOTAL	6,000	954.12	13,800

TABLE OF SECTION DEPTHS

SPAN NO.	GIRDER NO.	"X" AT ℄ BRG	"Y" AT ℄ BRG	"Z" AT ℄ SPAN ③
1–3	8	1'-0¼"	3'-10¼"	9½"
	9	1'-0¼"	3'-10¼"	10"
	10	1'-0¼"	3'-10¼"	10"
	11	1'-0¼"	3'-10¼"	10"

TABLE OF DEAD LOAD DEFLECTIONS

SPAN NO.	GIRDER NO.	"A"	"B"
		FT	FT
1–3	8	0.048	0.068
	9,10	0.085	0.120
	11	0.078	0.110

BAR TABLE

BAR	SIZE
A	#4
D	#4
G	#4
H	#4
J	#4
M	#4
OA	#5
P	#4
T	#4

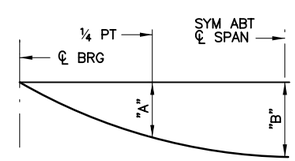

DEAD LOAD DEFLECTION DIAGRAM

NOTE: DEFLECTIONS SHOWN ARE DUE TO CONCRETE SLAB ONLY (Ec = 5,000 psi). CALCULATED DEFLECTIONS SHOWN ARE THEORETICAL AND ACTUAL DIMENSION MAY BE LESS. DEFLECTIONS TO BE ADJUSTED BASED ON FIELD OBSERVATIONS.

PRELIMINARY

90% SUBMITTAL
FOR INTERIM REVIEW ONLY
NOT FOR CONSTRUCTION, BIDDING, OR PERMIT PURPOSES.

CP&Y

ENGINEER KELLY HO
P.E. No. 112947 DATE 2/21/2017

BEXAR COUNTY
PUBLIC WORKS DEPARTMENT

NO	DATE	DESCRIPTION	DWG	CHK

REVISIONS

CP&Y
12500 SAN PEDRO AVENUE, SUITE 450
SAN ANTONIO, TEXAS 78216
TEL (210) 494-8004
FAX (210) 494-8286
T.B.P.E. FIRM # 1741

TALLEY ROAD

240.00' PRESTRESSED CONCRETE I-GIRDER UNIT PHASE 3A

PROJECT NUMBER:			SHEET NO.
0849-01-046			397
DESIGNED BY:	KH	ROADWAY/HIGHWAY:	
CHECKED BY:	CPY	TALLEY ROAD	
DRAWN BY:	CPY	STATE	COUNTY
CHECKED BY:	CPY	TEXAS	BEXAR

SHEET 2 OF 2

cpybw_ANSIB.tbl
cpypdf_ANSIB.pltcfg
pw:/Active Projects/BEXA14048.01/8.00 Plans and Drawings/8.30 Cut Sheets/8.3.07 Bridge/BEXA14048-BR-SD02.dgn
2/21/2017 3:11:01 PM rwebster

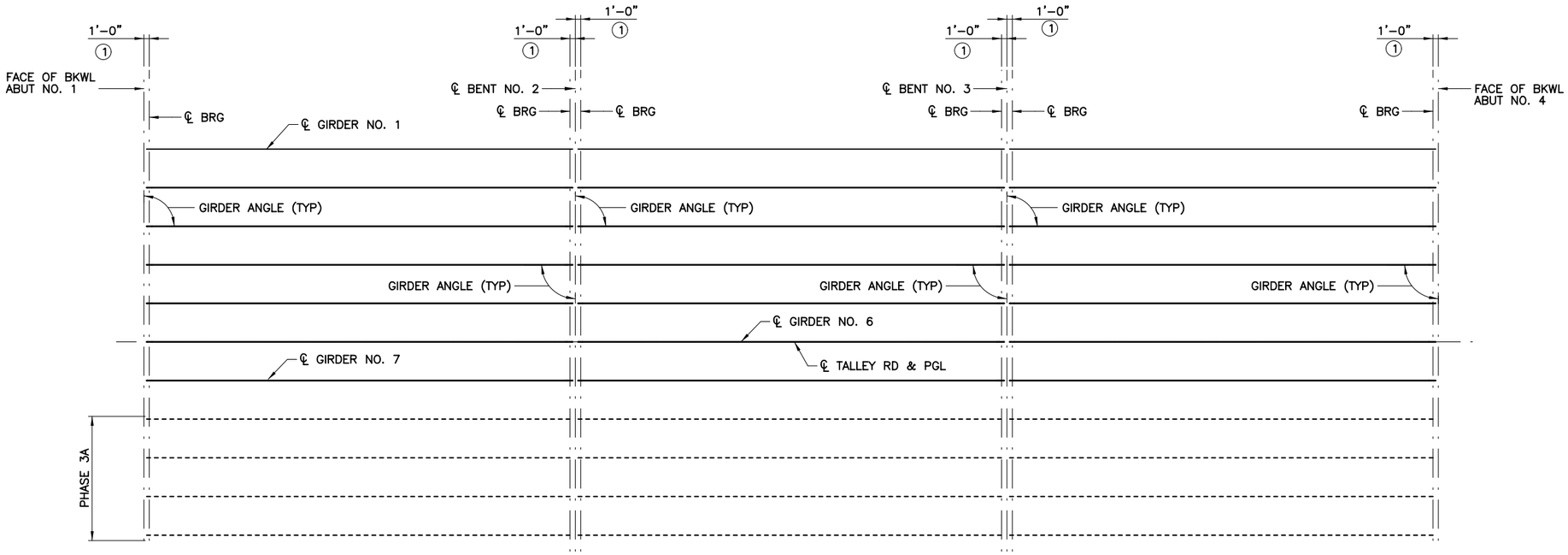

GENERAL NOTES:

1. ALL DIMENSIONS ARE IN FEET UNLESS NOTED OTHERWISE.
2. GIRDER LENGTHS SHOWN ARE BOTTOM GIRDER FLANGE LENGTHS WITH ADJUSTMENT MADE FOR GIRDER SLOPE.

(1) SEE IGEB STANDARD FOR ORIENTATION OF DIMENSIONS.

BENT REPORT

ABUT NO. 1 (N 71 17 26.83 E)

DISTANCE BETWEEN STATION LINE AND GIRDER 1 35.750 L

		GIRDER SPAC. (℄ BENT)	GIRDER ANGLE D	M	S
SPAN 1	GIRDER 1	0.000	90	0	0
	GIRDER 2	7.143	90	0	0
	GIRDER 3	7.143	90	0	0
	GIRDER 4	7.143	90	0	0
	GIRDER 5	7.143	90	0	0
	GIRDER 6	7.143	90	0	0
	GIRDER 7	7.143	90	0	0
	TOTAL	42.857			

BENT NO. 2 (N 71 17 26.83 E)

DISTANCE BETWEEN STATION LINE AND GIRDER 1 35.750 L

		GIRDER SPAC. (℄ BENT)	GIRDER ANGLE D	M	S
SPAN 1	GIRDER 1	0.000	90	0	0
	GIRDER 2	7.143	90	0	0
	GIRDER 3	7.143	90	0	0
	GIRDER 4	7.143	90	0	0
	GIRDER 5	7.143	90	0	0
	GIRDER 6	7.143	90	0	0
	GIRDER 7	7.143	90	0	0
	TOTAL	42.857			
SPAN 2	GIRDER 1	0.000	90	0	0
	GIRDER 2	7.143	90	0	0
	GIRDER 3	7.143	90	0	0
	GIRDER 4	7.143	90	0	0
	GIRDER 5	7.143	90	0	0
	GIRDER 6	7.143	90	0	0
	GIRDER 7	7.143	90	0	0
	TOTAL	42.857			

BENT NO. 3 (N 71 17 26.83 E)

DISTANCE BETWEEN STATION LINE AND GIRDER 1 32.750 L

		GIRDER SPAC. (℄ BENT)	GIRDER ANGLE D	M	S
SPAN 2	GIRDER 1	0.000	90	0	0
	GIRDER 2	7.143	90	0	0
	GIRDER 3	7.143	90	0	0
	GIRDER 4	7.143	90	0	0
	GIRDER 5	7.143	90	0	0
	GIRDER 6	7.143	90	0	0
	GIRDER 7	7.143	90	0	0
	TOTAL	42.857			
SPAN 3	GIRDER 1	0.000	90	0	0
	GIRDER 2	7.143	90	0	0
	GIRDER 3	7.143	90	0	0
	GIRDER 4	7.143	90	0	0
	GIRDER 5	7.143	90	0	0
	GIRDER 6	7.143	90	0	0
	GIRDER 7	7.143	90	0	0
	TOTAL	42.857			

ABUT NO. 4 (N 71 17 26.83 E)

DISTANCE BETWEEN STATION LINE AND GIRDER 1 32.750 L

		GIRDER SPAC. (℄ BENT)	GIRDER ANGLE D	M	S
SPAN 3	GIRDER 1	0.000	90	0	0
	GIRDER 2	7.143	90	0	0
	GIRDER 3	7.143	90	0	0
	GIRDER 4	7.143	90	0	0
	GIRDER 5	7.143	90	0	0
	GIRDER 6	7.143	90	0	0
	GIRDER 7	7.143	90	0	0
	TOTAL	42.857			

GIRDER REPORT

GIRDER REPORT, SPAN 1

	HORIZONTAL C-C BENT	DISTANCE C-C BRG.	TRUE DISTANCE BOT. BM. FLG.	GIRDER SLOPE
GIRDER 1	80.000	78.000	79.51	-0.0192
GIRDER 2	80.000	78.000	79.51	-0.0192
GIRDER 3	80.000	78.000	79.51	-0.0192
GIRDER 4	80.000	78.000	79.51	-0.0192
GIRDER 5	80.000	78.000	79.51	-0.0192
GIRDER 6	80.000	78.000	79.51	-0.0192
GIRDER 7	80.000	78.000	79.51	-0.0192

GIRDER REPORT, SPAN 2

	HORIZONTAL C-C BENT	DISTANCE C-C BRG.	TRUE DISTANCE BOT. BM. FLG.	GIRDER SLOPE
GIRDER 1	80.000	78.000	79.51	-0.0192
GIRDER 2	80.000	78.000	79.51	-0.0192
GIRDER 3	80.000	78.000	79.51	-0.0192
GIRDER 4	80.000	78.000	79.51	-0.0192
GIRDER 5	80.000	78.000	79.51	-0.0192
GIRDER 6	80.000	78.000	79.51	-0.0192
GIRDER 7	80.000	78.000	79.51	-0.0192

GIRDER REPORT, SPAN 3

	HORIZONTAL C-C BENT	DISTANCE C-C BRG.	TRUE DISTANCE BOT. BM. FLG.	GIRDER SLOPE
GIRDER 1	80.000	78.000	79.51	-0.0192
GIRDER 2	80.000	78.000	79.51	-0.0192
GIRDER 3	80.000	78.000	79.51	-0.0192
GIRDER 4	80.000	78.000	79.51	-0.0192
GIRDER 5	80.000	78.000	79.51	-0.0192
GIRDER 6	80.000	78.000	79.51	-0.0192
GIRDER 7	80.000	78.000	79.51	-0.0192

PRELIMINARY

90% SUBMITTAL
FOR INTERIM REVIEW ONLY
NOT FOR CONSTRUCTION, BIDDING, OR PERMIT PURPOSES.

CP&Y

ENGINEER KELLY HO
P.E. No. 112947 DATE 2/21/2017

BEXAR COUNTY
PUBLIC WORKS DEPARTMENT

NO	DATE	DESCRIPTION	DWG	CHK

REVISIONS

CP&Y
12500 SAN PEDRO AVENUE, SUITE 450
SAN ANTONIO, TEXAS 78216
TEL (210) 494-8004
FAX (210) 494-8286
T.B.P.E. FIRM # 1741

TALLEY ROAD

GIRDER LAYOUT
PHASE 4A

PROJECT NUMBER:		SHEET NO.
0849-01-046		398
DESIGNED BY: KH	ROADWAY/HIGHWAY:	
CHECKED BY: CPY	TALLEY ROAD	
DRAWN BY: CPY	STATE	COUNTY
CHECKED BY: CPY	TEXAS	BEXAR

SHEET 1 OF 1

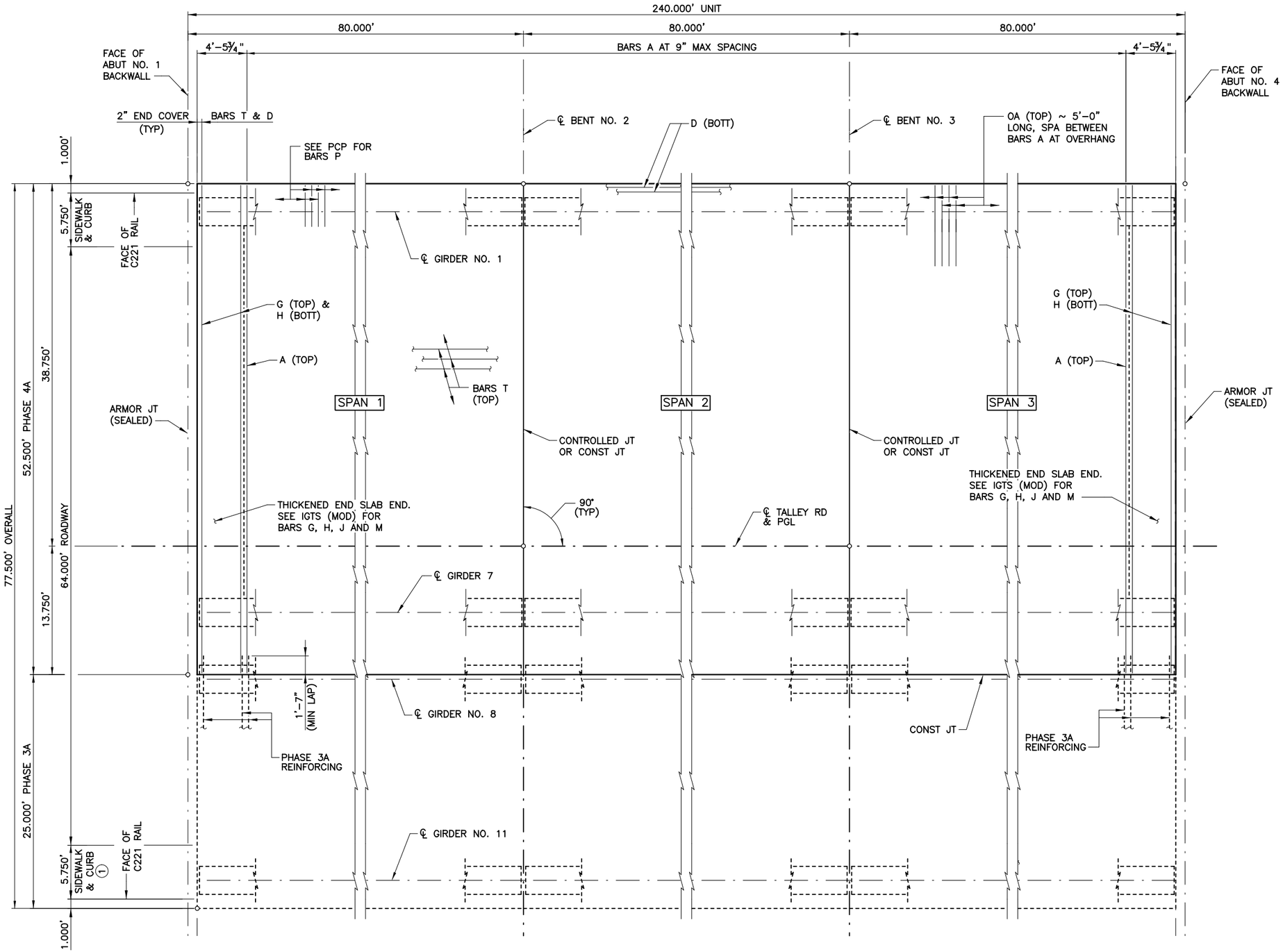

PLAN

GENERAL NOTES:

1. DESIGNED ACCORDING TO 2014 AASHTO LRFD BRIDGE DESIGN SPECIFICATIONS WITH LATEST INTERIMS (7TH ED) (HL93 LOADING).
2. SEE PCP AND PCP-FAB STANDARDS FOR PANEL DETAILS NOT SHOWN.
3. SEE IGTS (MOD) STANDARD FOR BAR G AND H DETAILS.
4. SEE IGMS STANDARD FOR MISCELLANEOUS SLAB DETAILS NOT SHOWN.
5. SEE C221 AND CTB STANDARD FOR RAIL ANCHORAGE IN SLAB.
6. SEE PMDF STANDARDS FOR DETAILS AND QUANTITY ADJUSTMENTS IF THIS OPTION IS USED.
7. COVER DIMENSIONS ARE CLEAR DIMENSIONS, UNLESS NOTED OTHERWISE.
8. PROVIDE CLASS "S" CONCRETE, f'c = 4000 psi.
9. PROVIDE GRADE 60 REINFORCING STEEL.
10. PROVIDE BAR LAPS, WHERE REQUIRED, AS FOLLOWS: UNCOATED ~ #4 = 1'-7"

① SIDEWALK AND CURB TO BE CONSTRUCTED AFTER THE COMPLETION OF PHASE 4A.

PRELIMINARY

90% SUBMITTAL
FOR INTERIM REVIEW ONLY
NOT FOR CONSTRUCTION, BIDDING, OR PERMIT PURPOSES.

CP&Y

ENGINEER KELLY HO
P.E. No. 112947 DATE 2/21/2017

BEXAR COUNTY
PUBLIC WORKS DEPARTMENT

NO	DATE	DESCRIPTION	DWG	CHK

REVISIONS

CP&Y
12500 SAN PEDRO AVENUE, SUITE 450
SAN ANTONIO, TEXAS 78216
TEL (210) 494-8004
FAX (210) 494-8286
T.B.P.E. FIRM # 1741

TALLEY ROAD

240.00' PRESTRESSED CONCRETE
I-GIRDER UNIT
PHASE 4A

PROJECT NUMBER:	SHEET NO.
0849-01-046	399

DESIGNED BY:	ROADWAY/HIGHWAY:	
CHECKED BY:	TALLEY ROAD	
DRAWN BY:	STATE	COUNTY
CHECKED BY:	TEXAS	BEXAR

cpybw_ANSIB.tbl
cpypdf_ANSIB.pltcfg
pw:/Active Projects/BEXA14048.01/8.00 Plans and Drawings/8.30 Cut Sheets/8.3.07 Bridge/BEXA14048-BR-SD03.dgn
2/21/2017 3:11:07 PM rwebster
pw:/Active Projects/BEXA14048.01/8.00 Plans and Drawings/8.30 Cut Sheets/8.3.07 Bridge/BEXA14048-BR-SD03.dgn

TABLE OF ESTIMATED QUANTITIES			
SPAN	REINF CONCRETE SLAB	① PRESTR CONCRETE GIRDERS (TYPE TX34)	② REINF STEEL
NO.	SF	LF	LB
1	4,200	556.57	10,920
2	4,200	556.57	10,920
3	4,200	556.57	10,920
TOTAL	12,600	1,669.71	32,760

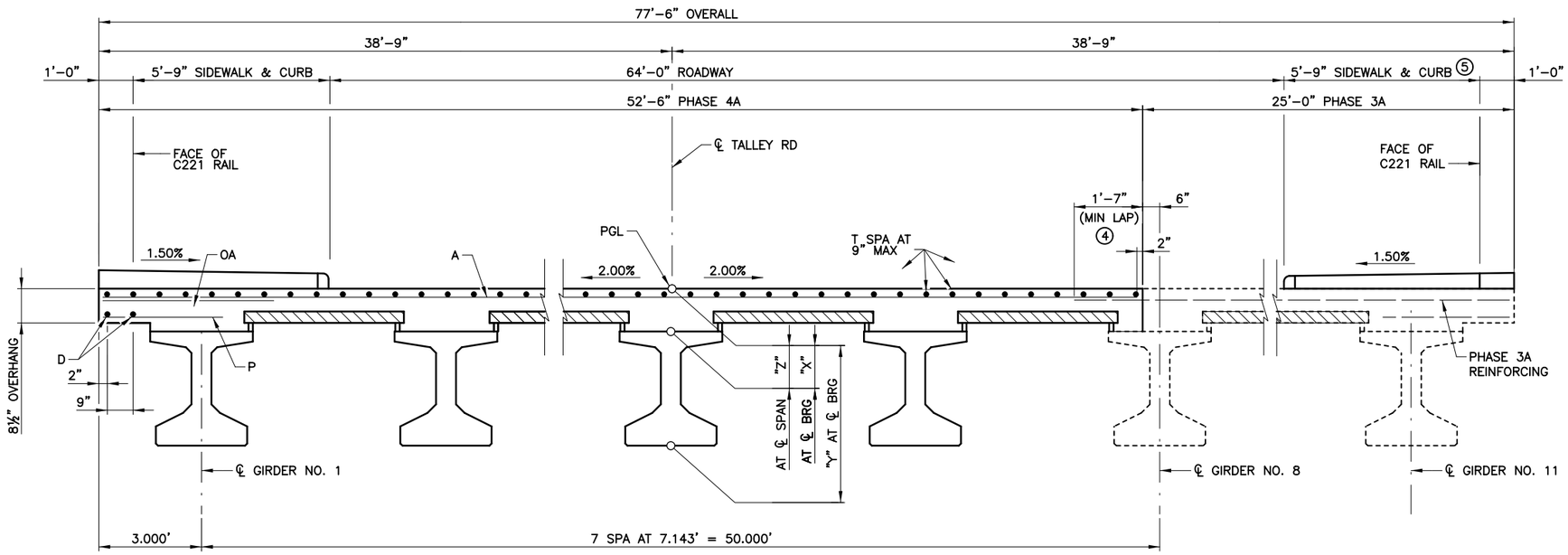

① GIRDER LENGTHS SHOWN ARE BOTTOM GIRDER FLANGE LENGTHS WITH ADJUSTMENTS MADE FOR GIRDER SLOPE. SEE GIRDER LAYOUT FOR GIRDER LENGTHS.

② REINFORCING STEEL WEIGHT IS CALCULATED USING AN APPROXIMATE FACTOR OF 2.6 LBS/SF, INCLUDES REINFORCING STEEL FOR SIDEWALK.

③ THEORETICAL DIMENSION.

④ PROVIDE 1'-7" MIN LAP WITH PHASE 3A REINFORCING.

⑤ SIDEWALK AND CURB TO BE CONSTRUCTED AFTER THE COMPLETION OF PHASE 4A.

TABLE OF SECTION DEPTHS				
SPAN NO.	GIRDER NO.	"X" AT ℄ BRG	"Y" AT ℄ BRG	"Z" AT ℄ SPAN ③
1-3	1-7	1'-0¼"	3'-10¼"	10"

TABLE OF DEAD LOAD DEFLECTIONS			
SPAN NO.	GIRDER NO.	"A"	"B"
		FT	FT
1-3	1	0.078	0.110
	2-7	0.085	0.119

BAR TABLE	
BAR	SIZE
A	#4
D	#4
G	#4
H	#4
J	#4
M	#4
OA	#5
P	#4
T	#4

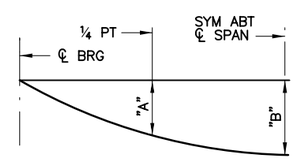

DEAD LOAD DEFLECTION DIAGRAM

NOTE: DEFLECTIONS SHOWN ARE DUE TO CONCRETE SLAB ONLY (Ec = 5,000 psi). CALCULATED DEFLECTIONS SHOWN ARE THEORETICAL AND ACTUAL DIMENSION MAY BE LESS. DEFLECTIONS TO BE ADJUSTED BASED ON FIELD OBSERVATIONS.

PRELIMINARY

90% SUBMITTAL
FOR INTERIM REVIEW ONLY
NOT FOR CONSTRUCTION, BIDDING, OR PERMIT PURPOSES.

CP&Y

ENGINEER KELLY HO
P.E. No. 112947 DATE 2/22/2017

BEXAR COUNTY
PUBLIC WORKS DEPARTMENT

NO	DATE	DESCRIPTION	DWG	CHK

REVISIONS

CP&Y
12500 SAN PEDRO AVENUE, SUITE 450
SAN ANTONIO, TEXAS 78216
TEL (210) 494-8004
FAX (210) 494-8286
T.B.P.E. FIRM # 1741

TALLEY ROAD

240.00' PRESTRESSED CONCRETE I-GIRDER UNIT PHASE 4A

PROJECT NUMBER:		SHEET NO.
0849-01-046		400
DESIGNED BY:	ROADWAY/HIGHWAY:	
CHECKED BY:	TALLEY ROAD	
DRAWN BY:	STATE	COUNTY
CHECKED BY:	TEXAS	BEXAR

SHEET 2 OF 2

cpybw_ANSIB.tbl
cpypdf_ANSIB.pltcfg
pw:/Active Projects/BEXA14048.01/8.00 Plans and Drawings/8.30 Cut Sheets/8.3.07 Bridge/BEXA14048-BR-SD04.dgn
2/22/2017 9:45:10 AM kho
pw:/Active Projects/BEXA14048.01/8.00 Plans and Drawings/8.30 Cut Sheets/8.3.07 Bridge/BEXA14048-BR-SD04.dgn

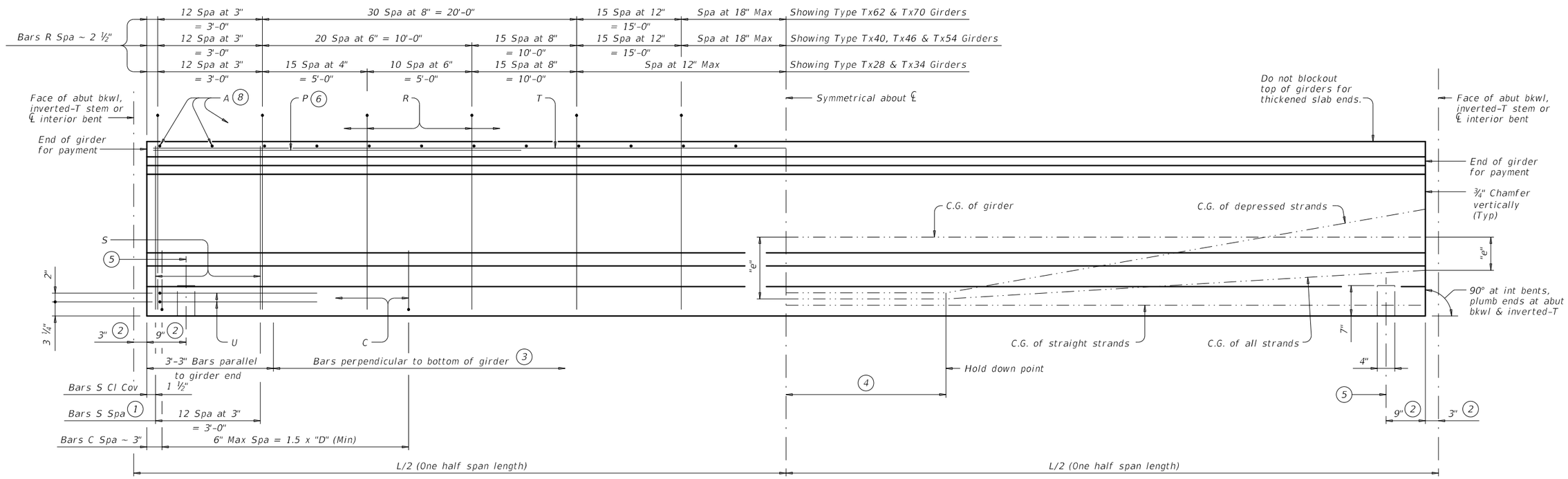

GIRDER ELEVATION

1. Bundle with Bars R.
2. Measured along ℄ Girder at interior bents; perpendicular to abutment bkwl or inverted-T stem.
3. The average of the top and bottom spacing of Bars R cannot exceed the required spacing.
4. L/20, but not less than 5'-0" (-0,+2').
5. ℄ 4" x 1 ½" Vertical Slotted Hole at doweled girder end [labeled (D) on Bridge Layout]. Required for outside girder only or as shown on substructure details. Anchorage holes may be tapered (4 ¾" x 1 ⅝") at base. If holes are formed with sheet metal, forms may be left in place.
6. Bars P (#6 x 15'-0") are only required when "e" at girder ends exceeds 0.25 x "D". At the fabricator's option bars larger than #6 may be used. When L is less than 50 ft, Bars P are to be the same length as Bars T.
7. 1 ⅜" Clear Cover to Bars S.
8. Space Bars A at 6" Max for girders requiring overhang bracket hangers. Space at 12" Max for all other girders. Tie to Bars R as necessary. See standard IGMS for "Deck Forming Notes".
9. Based on 155 pcf total weight of concrete and reinforcing steel.

GIRDER DIMENSIONS AND SECTION PROPERTIES

Girder Type	"D" (in.)	"B" (in.)	"Yt" (in.)	"Yb" (in.)	Area (in.²)	"Ix" (in.⁴)	"Iy" (in.⁴)	Weight (9) (plf)
Tx28	28	6	15.02	12.98	585	52,772	40,559	630
Tx34	34	12	18.49	15.51	627	88,355	40,731	675
Tx40	40	18	21.90	18.10	669	134,990	40,902	720
Tx46	46	22	25.90	20.10	761	198,089	46,478	819
Tx54	54	30	30.49	23.51	817	299,740	46,707	880
Tx62	62	37 ½"	33.72	28.28	910	463,072	57,351	980
Tx70	70	45 ½"	38.09	31.91	966	628,747	57,579	1,040

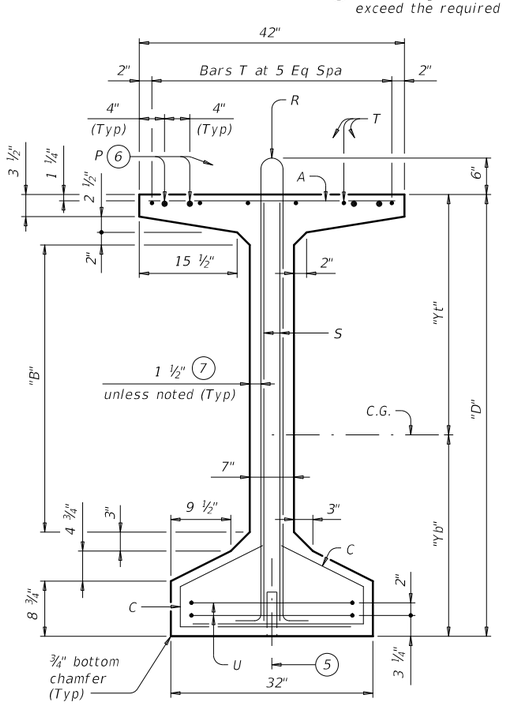

TYPE Tx62 & Tx70

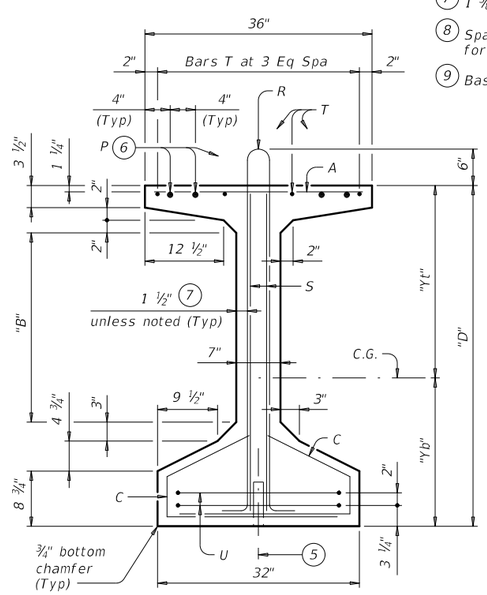

TYPE Tx46 & Tx54

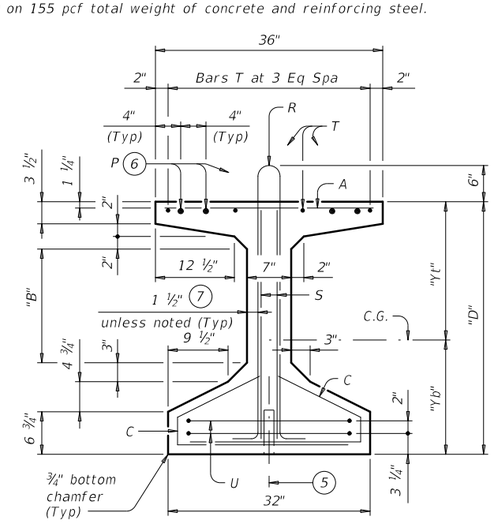

TYPE Tx28, Tx34 & Tx40

GENERAL NOTES:

Designed according to AASHTO LRFD Bridge Design Specifications.
Provide Class H concrete.
Provide Grade 60 reinforcing steel.
An equal area of deformed Welded Wire Reinforcement (WWR) (ASTM A1064) may be substituted for Bars A, C, R or T unless otherwise noted.
It is permissible for bars or strands to come in contact with materials used in forming anchor holes.

Cover dimensions are clear dimensions, unless noted otherwise.
Reinforcing bar dimensions shown are out-to-out of bar.

HL93 LOADING

Texas Department of Transportation — Bridge Division Standard

PRESTRESSED CONCRETE I-GIRDER DETAILS

IGD

FILE: igdstds1.dgn	DN: TxDOT	CK: JMH	DW: JTR	CK: JMH
©TxDOT October 2015	CONT	SECT	JOB	HIGHWAY
REVISIONS	0849	01	046	TALLEY ROAD
	DIST		COUNTY	SHEET NO.
			BEXAR	401

DISCLAIMER:
The use of this standard is governed by the "Texas Engineering Practice Act". No warranty of any kind is made by TxDOT for any purpose whatsoever. TxDOT assumes no responsibility for the conversion of this standard to other formats or for incorrect results or damages resulting from its use.

DATE:
FILE:

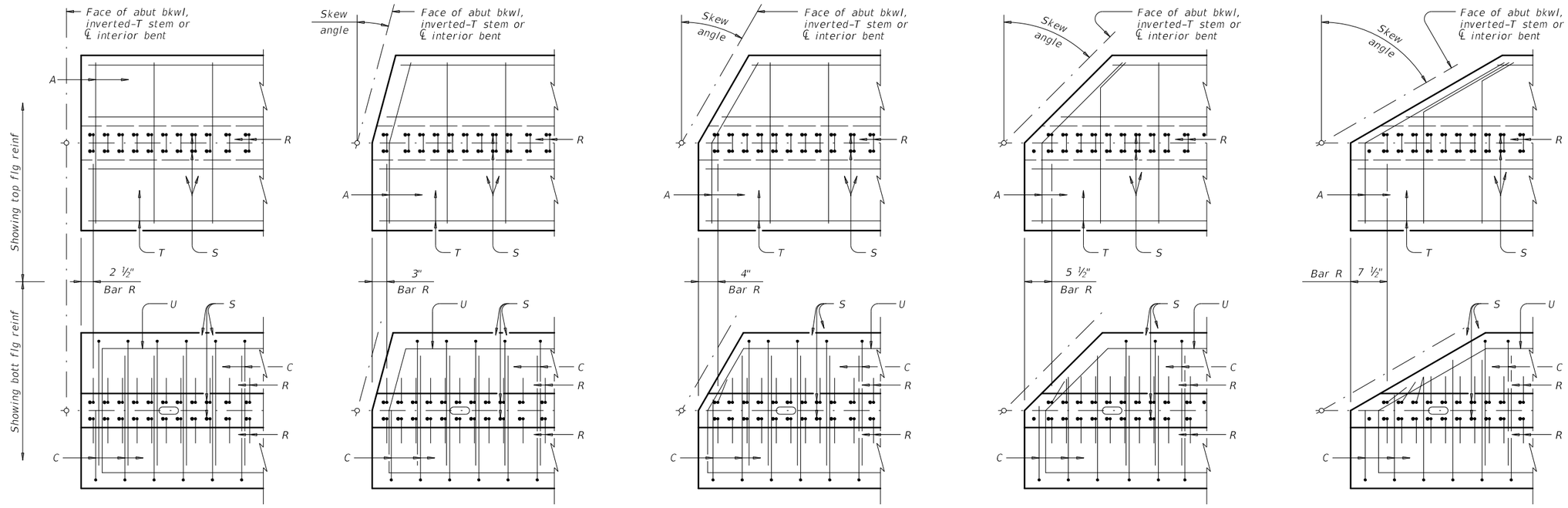

0° SKEW | 15° SKEW | 30° SKEW | 45° SKEW | 60° SKEW

PLAN OF GIRDER ENDS (10)

To control top flange cracking that may occur during form removal, additional top flange reinforcing may be placed as shown in girder ends at the Fabricator's option.

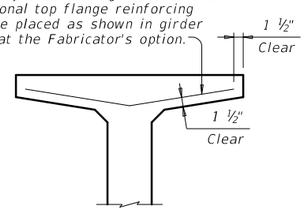

OPTIONAL TOP FLANGE REINFORCING DETAIL

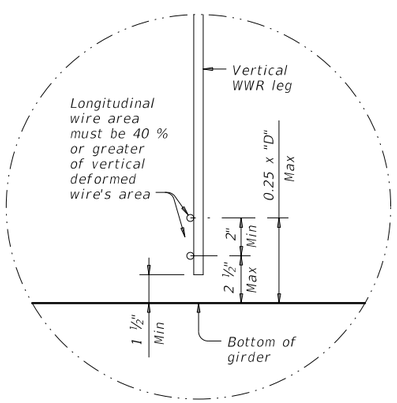

OPTIONAL WELDED WIRE REINFORCEMENT (WWR) DETAIL

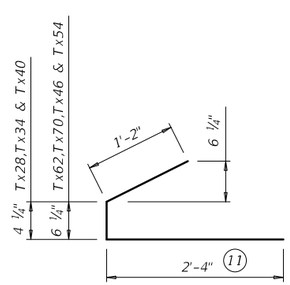

BARS C (#4)

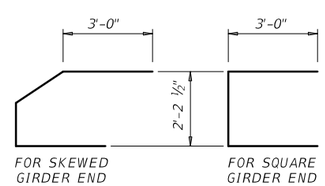

BARS U (#5)

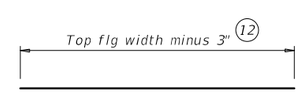

BARS A (#3)

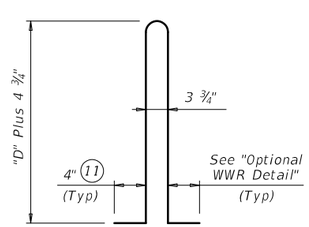

BARS R (#4) (14)

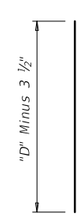

BARS S (#6)

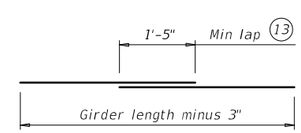

BARS T (#4)

(10) Reinforcing patterns shown are provided as guides to determine reinforcement placement in skewed ends. Place Bars S as close to girder end as cover requirements permit, which may prevent them to be bundled with Bars R.

(11) Bars may be cut or bent at skewed end as required.

(12) Increase as necessary for bars at skewed end.

(13) No portion of bar less than 10 ft.

(14) For Welded Wire Reinforcement (WWR) option, area of Bars R may be reduced in proportion to the increase in reinforcement yield strength over 60 ksi. Yield strength of WWR is limited to 75 ksi.

HL93 LOADING

SHEET 2 OF 2

Texas Department of Transportation — Bridge Division Standard

PRESTRESSED CONCRETE I-GIRDER DETAILS

IGD

FILE: igdstds1.dgn	DN: TxDOT	CK: JMH	DW: JTR	CK: JMH
©TxDOT October 2015	CONT	SECT	JOB	HIGHWAY
REVISIONS	0849	01	046	TALLEY ROAD
	DIST		COUNTY	SHEET NO.
			BEXAR	402

DISCLAIMER:
The use of this standard is governed by the "Texas Engineering Practice Act". No warranty of any kind is made by TxDOT for any purpose whatsoever. TxDOT assumes no responsibility for the conversion of this standard to other formats or for incorrect results or damages resulting from its use.

DATE:
FILE:

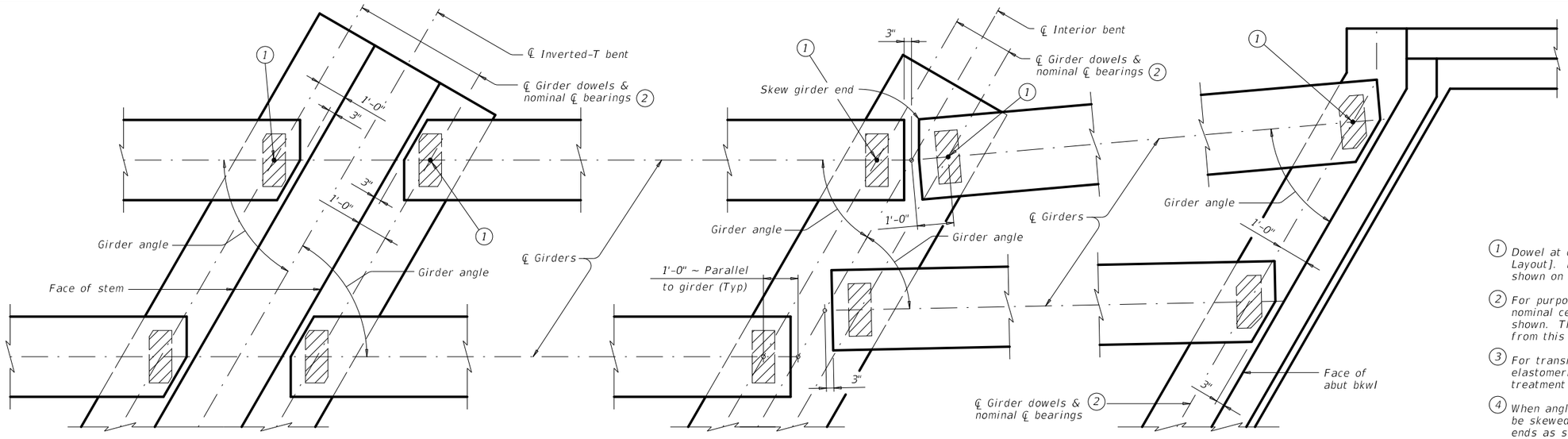

AT INVERTED-T BENT W/SKEW

AT CONVENTIONAL INTERIOR BENT W/SKEW

AT ABUTMENT W/SKEW (3)

(1) Dowel at doweled girder end [labeled (D) on Bridge Layout]. Required for outside girder only or as shown on substructure details.

(2) For purposes of computing bearing seat elevations, nominal centerline of bearing must be defined as shown. The actual center of bearing pad may vary from this line.

(3) For transition bents with backwall, girder and elastomeric bearings must receive the same treatment as shown for abutments.

(4) When angle exceeds 0°, one or both girders ends must be skewed to maintain the clearance between girder ends as shown in view.

(5) See Table of Bearing Pad Dimensions for bearing size. Girder end skew angles in Table not applicable for this situation. Table reflects girder conflicts of this type on radial bents only.

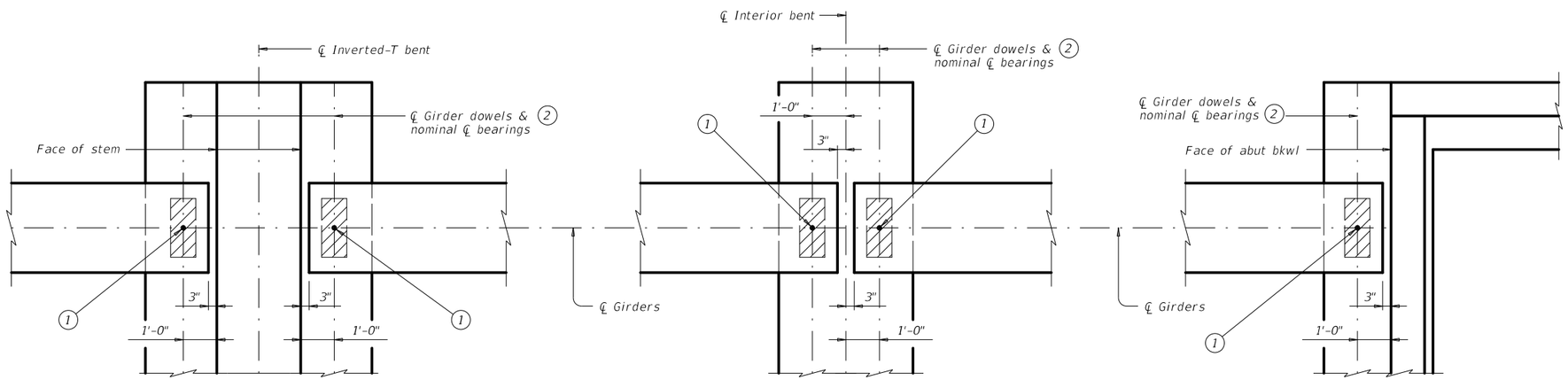

AT INVERTED-T BENT

AT CONVENTIONAL INTERIOR BENT

AT ABUTMENT (3)

GIRDER END DETAILS

GENERAL NOTES:

These details accommodate skew angles up to 60°.

Shop drawings for approval are required.

A bearing layout which identifies location and orientation of all bearings must be developed by the bearing fabricator. Permanently mark each bearing in accordance with the bearing layout. A copy of the bearing layout is to be provided to the Engineer.

Cost of furnishing and installing elastomeric bearings, including beveled and embedded steel plates, must be included in unit price bid for "Prestressed Concrete Girders".

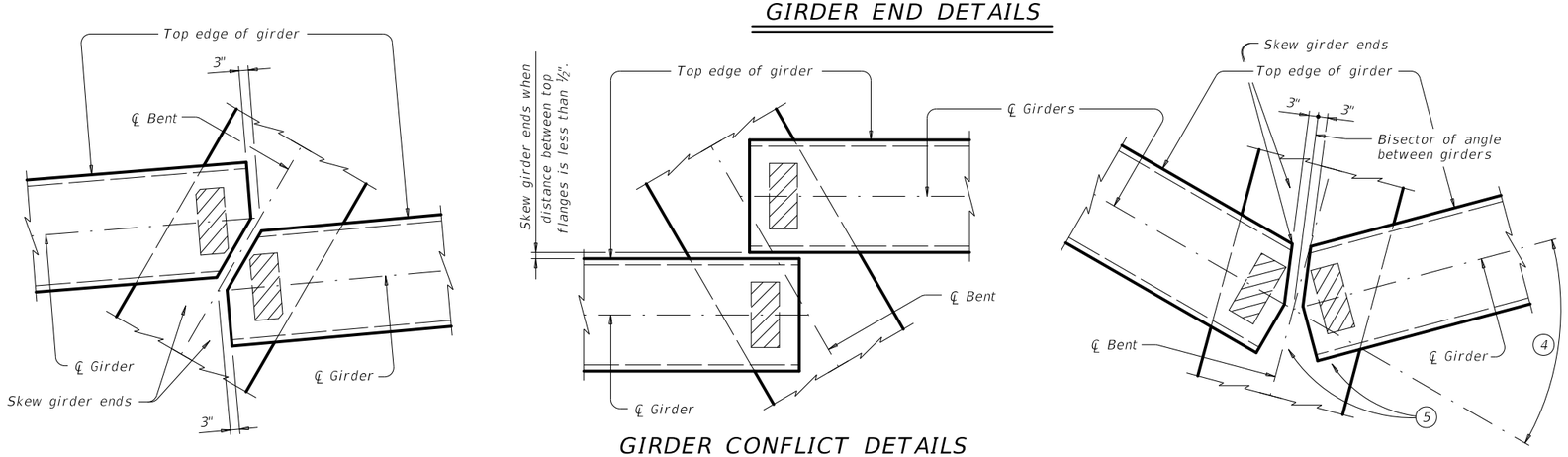

GIRDER CONFLICT DETAILS

HL93 LOADING

SHEET 1 OF 3

Texas Department of Transportation

Bridge Division Standard

ELASTOMERIC BEARING AND GIRDER END DETAILS

PRESTR CONCRETE I-GIRDERS

IGEB

FILE: igebsts1.dgn	DN: AEE	CK: JMH	DW: SFS	CK: TxDOT
©TxDOT October 2015	CONT	SECT	JOB	HIGHWAY
REVISIONS	0849	01	046	TALLEY ROAD
	DIST		COUNTY	SHEET NO.
			BEXAR	403

DISCLAIMER:
The use of this standard is governed by the "Texas Engineering Practice Act". No warranty of any kind is made by TxDOT for any purpose whatsoever. TxDOT assumes no responsibility for the conversion of this standard to other formats or for incorrect results or damages resulting from its use.

DATE:
FILE:

DISCLAIMER:
The use of this standard is governed by the "Texas Engineering Practice Act". No warranty of any kind is made by TxDOT for any purpose whatsoever. TxDOT assumes no responsibility for the conversion of this standard to other formats or for incorrect results or damages resulting from its use.

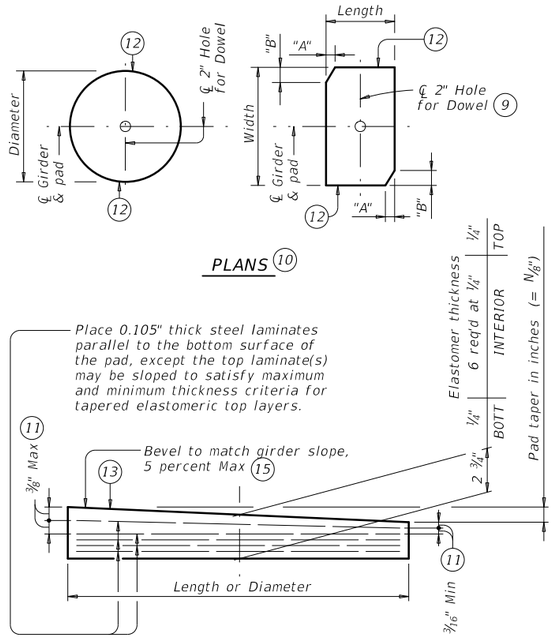

ELEVATION

LAMINATED ELASTOMERIC BEARING PAD

(50 DUROMETER)

TABLE OF MINIMUM SUBSTRUCTURE DIMENSIONS (14)			
Girder Type	Abutments: Face of Bkwl to Face of Cap	Int Bents: Overall Cap Width	Inv-T Bents: Corbel Width
Tx28 thru Tx54	1'-9"	3'-6"	1'-10 ½"
Tx62 & Tx70	2'-0"	4'-0"	2'-1 ½"

TABLE OF BEARING PAD DIMENSIONS						
Bent Type	Girder Type	Bearing Type (13)	Girder End Skew Angle Range	Pad Size Lgth x Wdth	Pad Clip Dimensions "A"	Pad Clip Dimensions "B"
ABUTMENTS, INVERTED-T AND TRANSITION BENTS WITH BACKWALLS	Tx28,Tx34, Tx40,Tx46 & Tx54	G-1-"N"	0° thru 21°	8" x 21"	---	---
		G-2-"N"	21°+ thru 30°	8" x 21"	1 ½"	2 ½"
		G-3-"N"	30°+ thru 45°	9" x 21"	4 ½"	4 ½"
		G-4-"N"	45°+ thru 60°	15" Dia	---	---
	Tx62 & Tx70	G-5-"N"	0° thru 21°	9" x 21"	---	---
		G-6-"N"	21°+ thru 30°	9" x 21"	1 ½"	2 ½"
		G-7-"N"	30°+ thru 45°	10" x 21"	4 ½"	4 ½"
		G-8-"N"	45°+ thru 60°	10" x 21"	7 ¼"	4 ¼"
CONVENTIONAL INTERIOR BENTS	Tx28,Tx34, Tx40,Tx46 & Tx54	---	---	---	---	---
		---	---	---	---	---
		G-1-"N"	0° thru 60°	8" x 21"	---	---
	Tx62 & Tx70	G-5-"N"	0° thru 60°	9" x 21"	---	---
CONVENTIONAL INTERIOR BENTS WITH SKEWED GIRDER ENDS (GIRDER CONFLICTS) (16)	Tx28,Tx34, Tx40,Tx46 & Tx54	G-1-"N"	0° thru 18°	8" x 21"	---	---
		G-2-"N"	18°+ thru 30°	8" x 21"	1 ½"	2 ½"
		G-9-"N"	30°+ thru 45°	8" x 21"	3"	3"
		G-10-"N"	45°+ thru 60°	9" x 21"	6"	3 ½"
	Tx62 & Tx70	G-5-"N"	0° thru 18°	9" x 21"	---	---
		G-5-"N"	18°+ thru 30°	9" x 21"	---	---
		G-11-"N"	30°+ thru 45°	9" x 21"	1 ½"	1 ½"
		G-12-"N"	45°+ thru 60°	9" x 21"	3"	1 ¾"

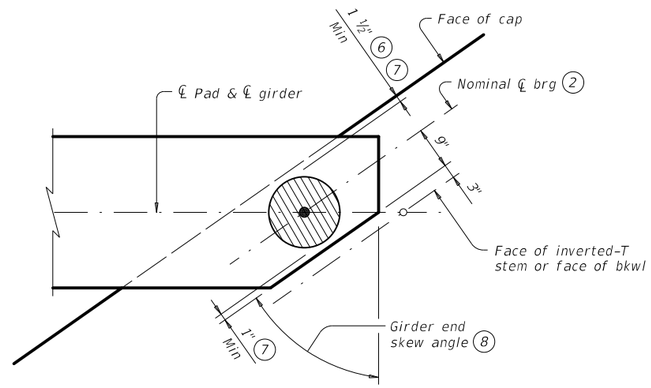

ROUND BEARINGS FOR SKEWED GIRDER ENDS AT FACE OF INVERTED-T STEM OR FACE OF BKWL

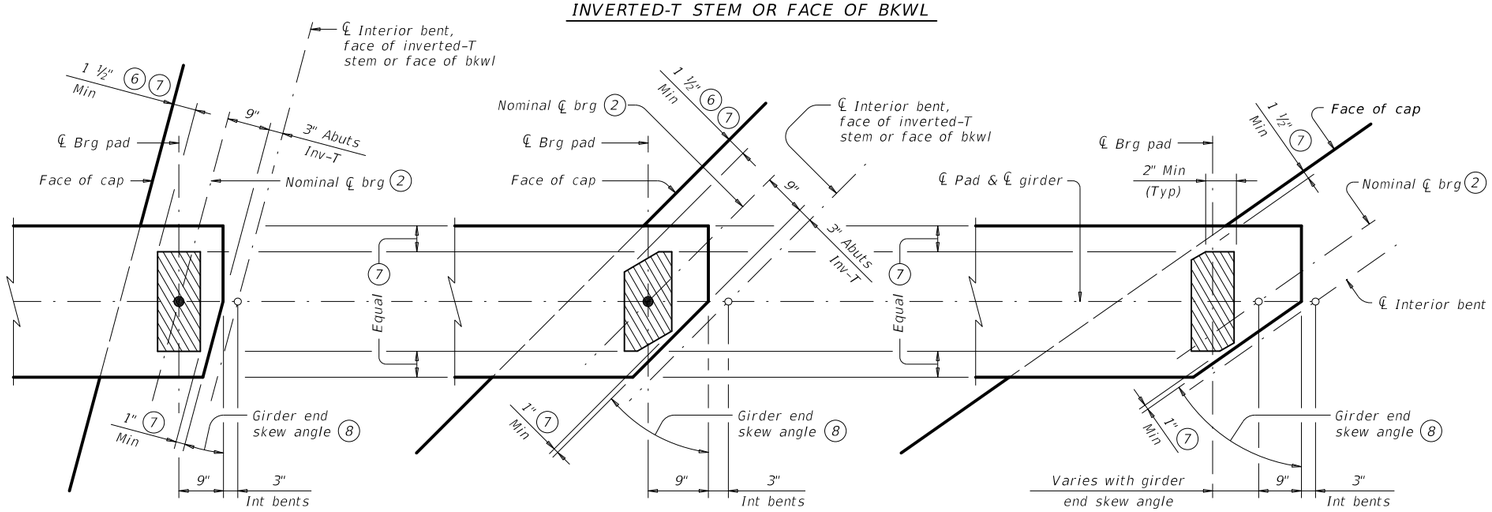

SKEWED GIRDER ENDS AT INT BENTS, FACE OF INVERTED-T STEM OR FACE OF BKWL

SKEWED GIRDER ENDS AT CONVENTIONAL INTERIOR BENTS (16)

(NO GIRDER DOWELS)

BEARING PAD PLACEMENT DIAGRAMS

(2) For purposes of computing bearing seat elevations, nominal centerline of bearing must be defined as shown. The actual center of bearing pad may vary from this line.

(6) 3" for inverted-T.

(7) Place centerline pad as near nominal centerline bearing as possible between limits shown.

(8) Girder end skew angle is equal to 90° minus the girder angle except at some conflicting girders.

(9) Provide 2" dia hole only at locations required. See Substructure details for location.

(10) See Table of Bearing Pad Dimensions for dimensions.

(11) Maximum and minimum layer thicknesses shown are for elastomer only, on tapered layers.

(12) Locate Permanent Mark here.

(13) Indicate BEARING TYPE on all pads. For tapered pads, locate BEARING TYPE on the high side. The Fabricator must include the value of "N" (amount of taper in ⅛" increments) in this mark.
Examples: N=0, (for 0" taper)
N=1, (for ⅛" taper)
N=2, (for ¼" taper)
(etc.)
Fabricated pad top surface slope must not vary from plan girder slope by more than $\left(\frac{0.0625"}{\text{Length or Dia}}\right)$ IN/IN.

(14) Substructure dimensions must satisfy the minimums provided to accommodate the elastomeric bearings shown on this standard.

(15) See sheet 3 of 3 for beveled plate use when slopes exceed 5 percent.

(16) If girder end is skewed for a girder conflict at an interior bent and a beveled sole plate is required, use bearing type for abutments at this location. Location of bearing centerline is to be set as for abutments in this case.

HL93 LOADING — SHEET 2 OF 3

Texas Department of Transportation — Bridge Division Standard

ELASTOMERIC BEARING AND GIRDER END DETAILS

PRESTR CONCRETE I-GIRDERS

IGEB

FILE: igebsts1.dgn	DN: AEE	CK: JMH	DW: SFS	CK: TxDOT
©TxDOT October 2015	CONT	SECT	JOB	HIGHWAY
REVISIONS	0849	01	046	TALLEY ROAD
	DIST		COUNTY	SHEET NO.
			BEXAR	404

DATE:
FILE:

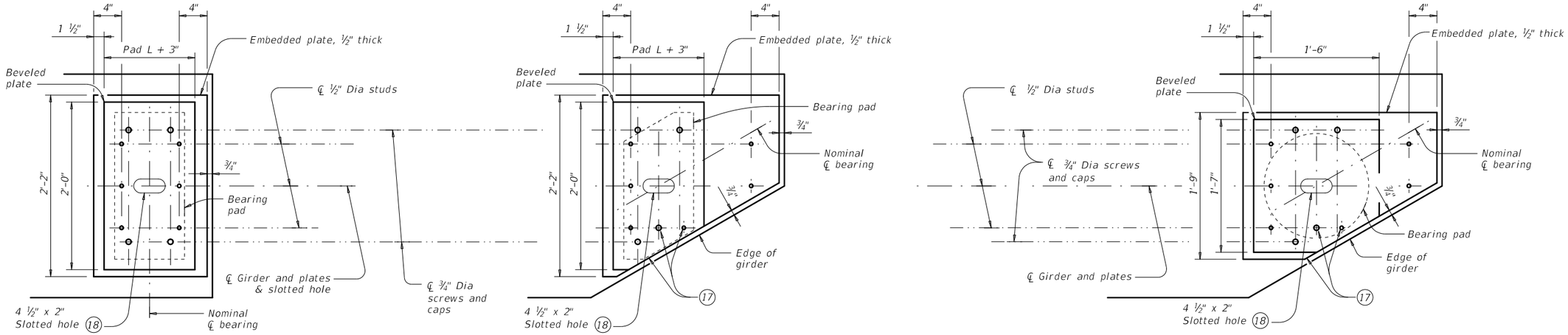

NORMAL GIRDER END
RECTANGULAR BEARING PAD

SKEWED GIRDER END
CLIPPED RECTANGULAR BEARING PAD

SKEWED GIRDER END
15" DIA BEARING PAD

PLAN VIEW OF SOLE PLATE DETAILS

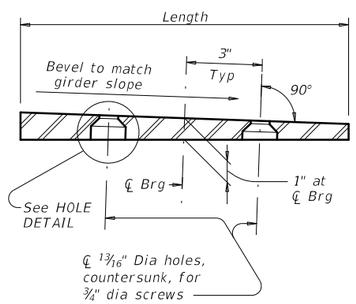

SECTION

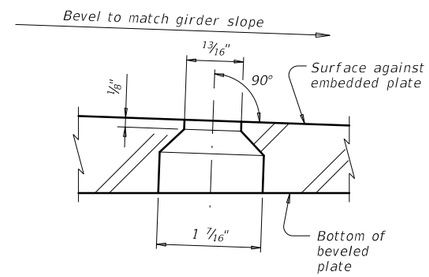

HOLE DETAIL

(17) Cut beveled and embedded plates to match girder end skew. Adjust location of screw and stud as shown when necessary.

(18) Slotted hole is required at doweled girder end locations.

BEVELED PLATE DETAILS

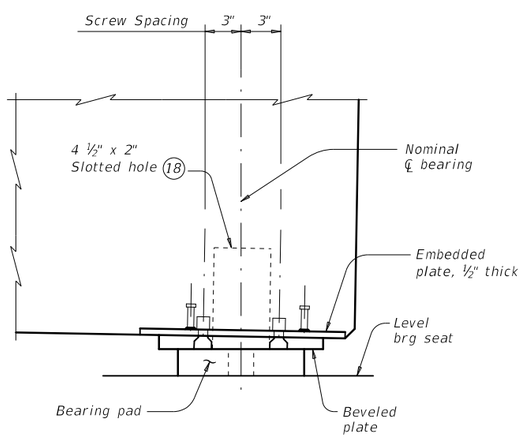

SIDE ELEVATION

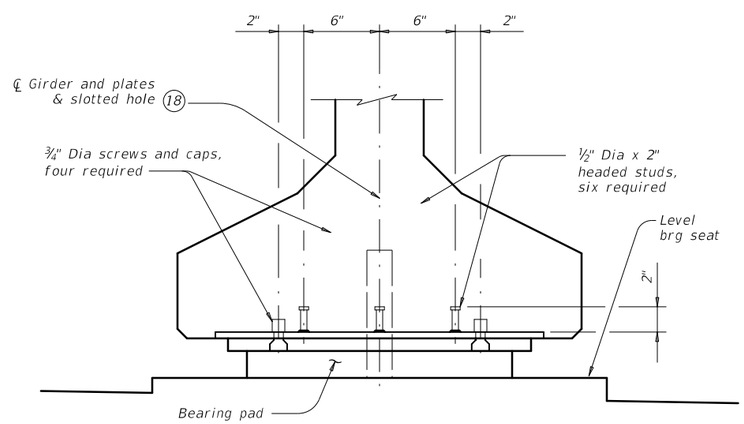

END ELEVATION

GIRDER DETAILS

SOLE PLATE NOTES:

Provide constant thickness elastomeric bearings with beveled and embedded steel sole plates in accordance with these details when the girder slope exceeds 5 percent or if otherwise required in the plans. Provide for all girders in the span.

On the shop drawings, dimension sole plates to the nearest 1/16" based on required thickness at centerline of bearing and slope of girder. Thickness tolerance variation from the approved shop drawings is 1/16"+/-, except variation from a plane parallel to the theoretical top surface can not exceed 1/16" total. Bearing surface tolerances listed in Item 424 apply to embedded and beveled plates.

Steel plate must conform to ASTM A36, A572 Gr 50, or A709 Gr 36 or Gr 50. Hot dip galvanize both the embedded plate and beveled sole plate after fabrication. Seal weld caps to embedded plate before galvanizing.

When determining if relocation of screw holes and studs are necessary for skewed girder ends, minimum clearance from screw or stud centerline to plate edge is 1.25".

Tap threads in the embedded plate only. Drill and tap prior to galvanizing.

¾" Dia screws must be electroplated, socket flat head countersunk cap screws conforming to ASTM F835. Electroplating must conform to ASTM B633, SC 2, Type I. Provide screws long enough to maintain a ¾" minimum embedment into the embedded plate and galvanized cap. Provide galvanized steel caps (16 ga Min) with a nominal 1" inside diameter and deep enough to accommodate the screws, but not less than ½" deep or deeper than 1".

Install beveled sole plates prior to shipping girders. Installed screw heads must not protrude below the bottom of the beveled plate.

HL93 LOADING — SHEET 3 OF 3

Texas Department of Transportation — Bridge Division Standard

ELASTOMERIC BEARING AND GIRDER END DETAILS
PRESTR CONCRETE I-GIRDERS

IGEB

FILE: igebsts1.dgn	DN: AEE	CK: JMH	DW: SFS	CK: TxDOT
©TxDOT October 2015	CONT	SECT	JOB	HIGHWAY
REVISIONS	0849	01	046	TALLEY ROAD
	DIST	COUNTY		SHEET NO.
		BEXAR		405

DISCLAIMER:
The use of this standard is governed by the "Texas Engineering Practice Act". No warranty of any kind is made by TxDOT for any purpose whatsoever. TxDOT assumes no responsibility for the conversion of this standard to other formats or for incorrect results or damages resulting from its use.

DATE:
FILE:

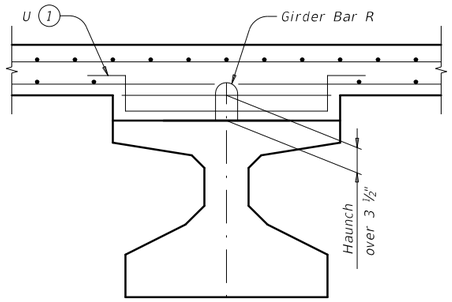

HAUNCH REINFORCING DETAIL

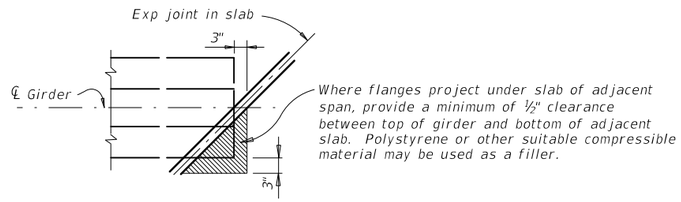

TREATMENT AT GIRDER END FOR SKEWED SPANS

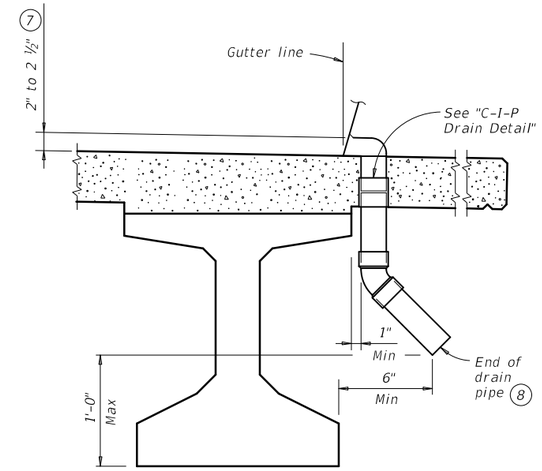

DRAIN DETAIL (9)

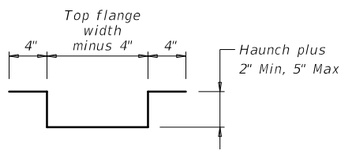

BARS U (#4)

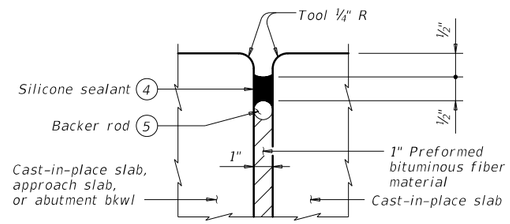

TYPE A JOINT DETAIL (6)

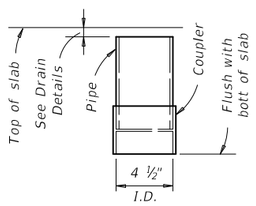

C-I-P DRAIN DETAIL (2)

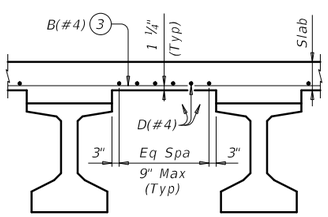

TYPICAL PART TRANSVERSE SLAB SECTION WITHOUT PCP

Top reinforcing steel not shown for clarity.

(1) Space Bars U with girder Bars R in all areas where measured haunch exceeds 3 ½".

(2) Roughen outside of PVC with coarse rasp or equal to ensure bond with cast-in-place concrete.

(3) Bars B(#4) spaced at 9" Max with 2" end cover. Overhang option, Contractor's may end alternating bars B(#4) at centerline outside girder.

(4) Class 7 silicone sealant that conforms to DMS-6310. Install when ambient temperature is between 55°F and 85°F and rising. Engineer to determine allowable hours for sealant application.

(5) 1 ¼" backer rod must be compatible with joint sealant. Use of multiple pieces to create a backer rod cross section is not permitted. Top of backer rod must be convex as shown.

(6) The maximum distance between Type A expansion joints is 100'. See Bridge Layout for location of joints. Type A joints are subsidiary to Item 422, "Concrete Superstructures".

(7) Drain entrance formed in rail or sidewalk.

(8) Water may not be discharged onto girders.

(9) All drain pipe and fittings to be 4" diameter (Sch 40) PVC. See Item 481 "Pipe for Drains" for pipe, connections and solvent welding. Bend reinforcing steel to clear PVC 1". Drain length and location is as directed by the Engineer. Drains are not permitted over roadways or railways, or within 10'-0" of bent caps. Degrease outside of exposed PVC, apply acrylic water base primer, then coat with same surface finishing material as used for outside girder face. Variations of the above designs, as required for the type of rail used and its location on the structure, may be installed with the approval and direction of the Engineer.

GENERAL NOTES:

Designed according to AASHTO LRFD Bridge Design Specifications.

All items (reinforcing steel, drains, joint formers, etc.) shown on this sheet are subsidiary to other bid items.

Cover dimensions are clear dimensions, unless noted otherwise.

Reinforcing bar dimensions shown are out-to-out of bar.

DECK FORMWORK NOTES:

Overhang bracket hangers are limited to a safe working load of 3,600 lbs, applied to and along the axis of a coil rod at 45 degrees from vertical, regardless of higher loads permitted by hanger manufacturers. Do not place a hanger less than 12" from girder end. Space hangers accordingly.

DISCLAIMER:
The use of this standard is governed by the "Texas Engineering Practice Act". No warranty of any kind is made by TxDOT for any purpose whatsoever. TxDOT assumes no responsibility for the conversion of this standard to other formats or for incorrect results or damages resulting from its use.

DATE:
FILE:

SHEET 1 OF 2

Texas Department of Transportation — Bridge Division Standard

MISCELLANEOUS SLAB DETAILS

PRESTR CONCRETE I-GIRDERS

IGMS

FILE: igmsstsl.dgn	DN: TxDOT	CK: TxDOT	DW: JTR	CK: TxDOT
©TxDOT October 2015	CONT	SECT	JOB	HIGHWAY
REVISIONS	0849	01	046	TALLEY ROAD
	DIST		COUNTY	SHEET NO.
			BEXAR	406

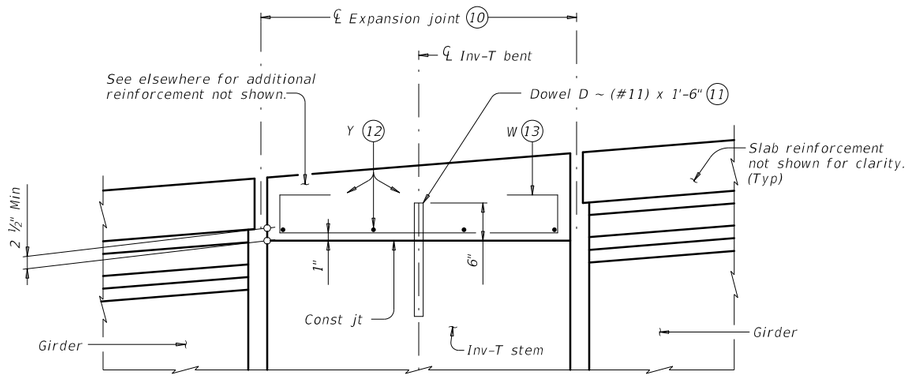

SHOWING EXPANSION JOINTS

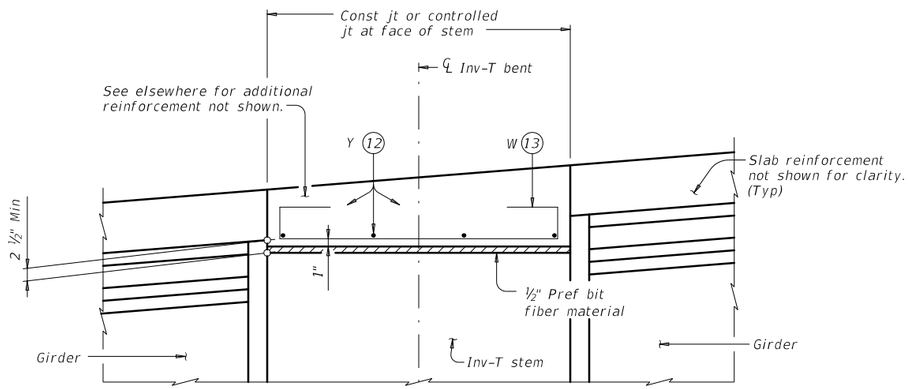

SHOWING CONST JTS OR CONTROLLED JTS

REINFORCEMENT OVER INV-T BENTS

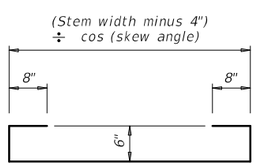

BARS W (#4)

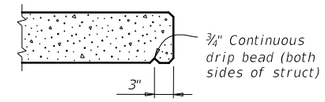

DRIP BEAD DETAIL

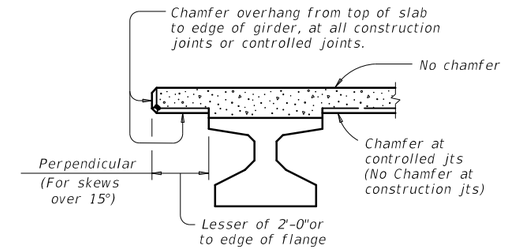

CHAMFER LIMITS DETAIL (14)

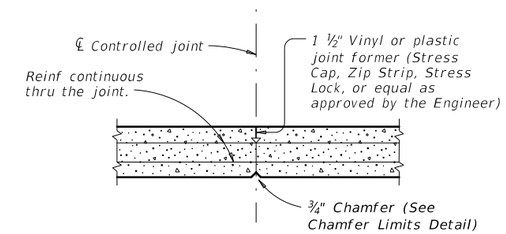

CONTROLLED JOINT DETAIL

(Saw-cutting is not allowed)

(10) See Layout for joint type.

(11) Dowels D (#11) spaced at 5 Ft Max. See Inv-T bents for quantity and location.

(12) Space Bars Y (#4) at 12" Max. Use 2" end cover. Number of Bars Y must satisfy spacing limit. Place parallel to bent.

(13) Space Bars W at 12" Max (3" from end of cap). Tilt if necessary to maintain cover requirements. Place parallel to longitudinal slab reinforcement.

(14) See Span details for type of joint and joint locations.

DISCLAIMER:
The use of this standard is governed by the "Texas Engineering Practice Act". No warranty of any kind is made by TxDOT for any purpose whatsoever. TxDOT assumes no responsibility for the conversion of this standard to other formats or for incorrect results or damages resulting from its use.

DATE:
FILE:

SHEET 2 OF 2

Texas Department of Transportation — Bridge Division Standard

MISCELLANEOUS SLAB DETAILS

PRESTR CONCRETE I-GIRDERS

IGMS

FILE: igmsstsl.dgn	DN: TxDOT	CK: TxDOT	DW: JTR	CK: TxDOT
©TxDOT October 2015	CONT	SECT	JOB	HIGHWAY
REVISIONS	0849	01	046	TALLEY ROAD
	DIST		COUNTY	SHEET NO.
			BEXAR	407

STRUCTURE	DESIGNED GIRDERS									STRAIGHT STRAND PATTERN									DEPRESSED STRAND PATTERN (1)			CONCRETE		OPTIONAL DESIGN				
	SPAN NO.	GIRDER NO.	GIRDER TYPE	PRESTRESSING STRANDS						TOT NO. DEB	DEBONDED STRANDS PER ROW								NO.	TO END (in)	TO ℄ (in)	RELEASE STRGTH (2) f'ci (ksi)	MINIMUM 28 DAY COMP STRGTH f'c (ksi)	DESIGN LOAD COMP STRESS (TOP ℄) (SERVICE I) fct(ksi)	DESIGN LOAD TENSILE STRESS (BOTT ℄) (SERVICE III) fcb(ksi)	REQUIRED MINIMUM ULTIMATE MOMENT CAPACITY (STRENGTH I) (ft-kips)	LIVE LOAD DISTRIBUTION FACTOR (3)	
				NON-STD STRAND PATTERN	TOTAL NO.	SIZE (in)	STRGTH fpu (ksi)	"e" ℄ (in)	"e" END (in)		DIST FROM BOTTOM (in)	NO. OF STRANDS TOTAL	NO. OF STRANDS DE-BONDED	NUMBER OF STRANDS DEBONDED TO (ft from end) 3	6	9	12	15									Moment	Shear
MEDIO CREEK BRIDGE	1-3	ALL	TX34		30	0.600	270	11.811	7.411										6	30.5	6.50	5.200	5.800	3.243	-3.858	3.754	0.58	0.75

NON-STANDARD STRAND PATTERNS

PATTERN	STRAND ARRANGEMENT AT ℄ OF GIRDER

(1) When TO END (in) equals TO ℄ (in), place these straight strands at the defined TO values. Fill the lower rows with the remainder of the total number of strands in accordance with the Debonded Strand Designs notes.

(2) Based on the following allowable stresses (ksi):

Compression = 0.65 f'ci

Tension = $0.24\sqrt{f'ci}$

Optional designs must likewise conform.

(3) Portion of full HL93.

DESIGN NOTES:

Designed according to AASHTO LRFD Bridge Design Specifications.

Optional designs for girders 120 feet or longer must have a calculated residual camber equal to or greater than that of the designed girder.

Prestress losses for the designed girders have been calculated for a relative humidity of 60 percent. Optional designs must likewise conform.

FABRICATION NOTES:

Provide Class H concrete.

Provide Grade 60 reinforcing steel bars.

Use low relaxation strands, each pretensioned to 75 percent of fpu.

Strand debonding must comply with Item 424.4.2.2.2.4. Full-length debonded strands are only permitted in positions marked △. Double wrap full-length debonded strands in outer most position of each row.

When shown on this sheet, the Fabricator has the option of furnishing either the designed girder or an approved optional design. All optional design submittals must be signed, sealed and dated by a Professional Engineer registered in the State of Texas.

DEBONDED STRAND DESIGNS:

Locate strands for the designed girder as low as possible on the 2" grid system unless a non-standard strand pattern is indicated. Fill row "2.5", then row "4.5", then row "6.5", etc. Place strands within a row as follows:

1) Locate a strand in each "A" and "G" positions.
2) Place strand symmetrically about vertical centerline of girder.
3) Space strands as equally as possible across the entire width.

Do not debond strands in position "G". Distribute debonded strands symmetrically about the vertical centerline. Increase debonded lengths working outward, with debonding staggered in each row.

DEPRESSED STRAND DESIGNS:

Locate strands for the designed girder as low as possible on the 2" grid system unless a non-standard strand pattern is indicated. Fill row "2.5", then row "4.5", then row "6.5", etc., beginning each row in the "A" position and working outward until the required number of strands is reached. All strands in the "A" position must be depressed, maintaining the 2" spacing so that, at the girder ends, the upper two strands are in the position shown in the table.

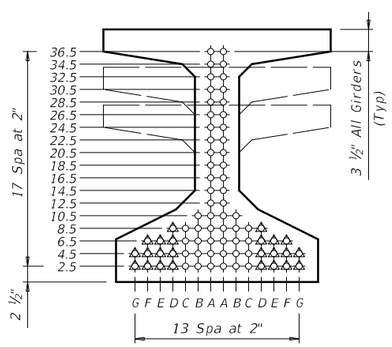

TYPE Tx28, Tx34 & Tx40

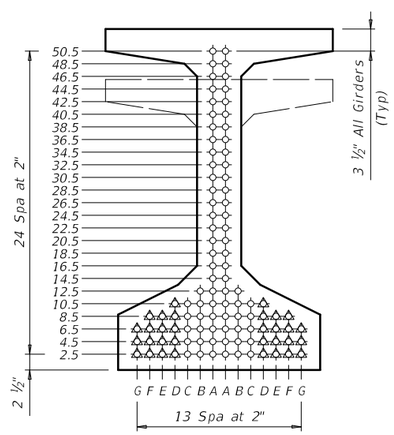

TYPE Tx46 & Tx54

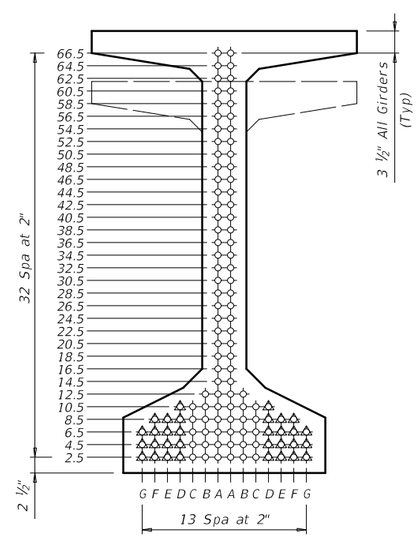

TYPE Tx62 & Tx70

HL93 LOADING

PRELIMINARY

90% SUBMITTAL
FOR INTERIM REVIEW ONLY
NOT FOR CONSTRUCTION, BIDDING, OR PERMIT PURPOSES.

CP&Y

ENGINEER KELLY HO
P.E. No. 112947 DATE 2/21/2017

Texas Department of Transportation — Bridge Division Standard

PRESTRESSED CONCRETE I-GIRDER DESIGNS (NON-STANDARD SPANS)

IGND

FILE: igndsts1.dgn	DN: TxDOT	CK: TxDOT	DW: JTR	CK: TAR
©TxDOT October 2015	CONT	SECT	JOB	HIGHWAY
REVISIONS	0849	01	046	TALLEY ROAD
01-16: Notes. 05-16: Addition of debonded straight strand designs.	DIST	COUNTY		SHEET NO.
		BEXAR		408

DISCLAIMER:
The use of this standard is governed by the "Texas Engineering Practice Act". No warranty of any kind is made by TxDOT for any purpose whatsoever. TxDOT assumes no responsibility for the conversion of this standard to other formats or for incorrect results or damages resulting from its use.

DATE:
FILE:

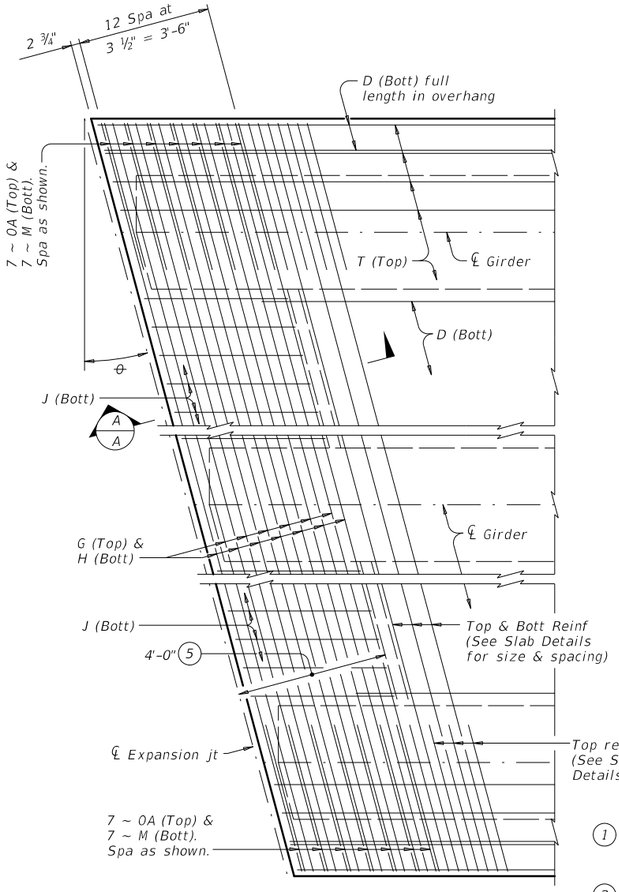

PARTIAL PLAN FOR SLABS WITHOUT BREAKBACK

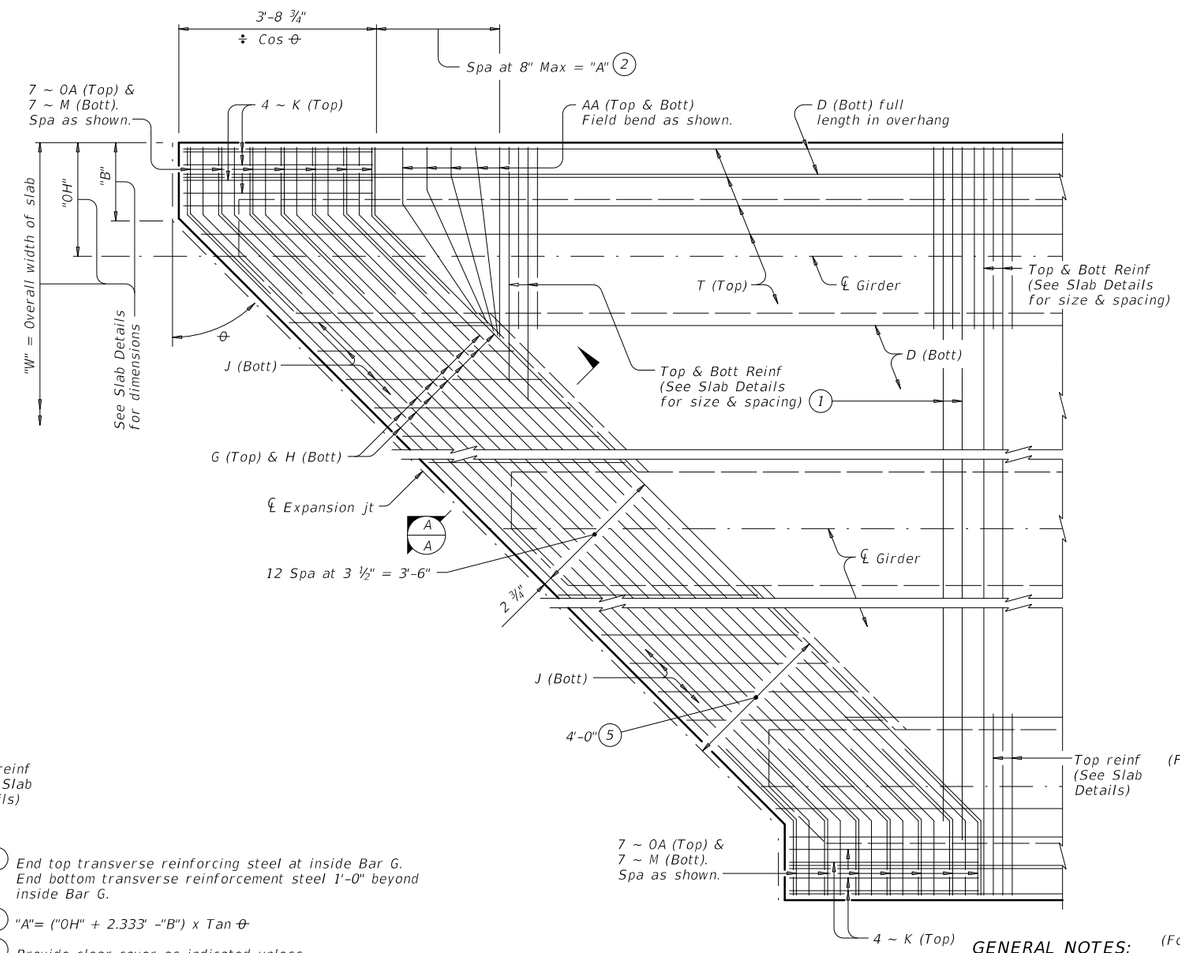

PARTIAL PLAN FOR SLABS WITH BREAKBACK

1. End top transverse reinforcing steel at inside Bar G. End bottom transverse reinforcement steel 1'-0" beyond inside Bar G.
2. "A"= ("OH" + 2.333' -"B") x Tan θ
3. Provide clear cover as indicated unless otherwise shown on Span Details.
4. Only required on slabs with breakbacks.
5. Thickened slab end dimensioned perpendicular to face of bkwl, centerline interior bent or face of inverted-T stem.

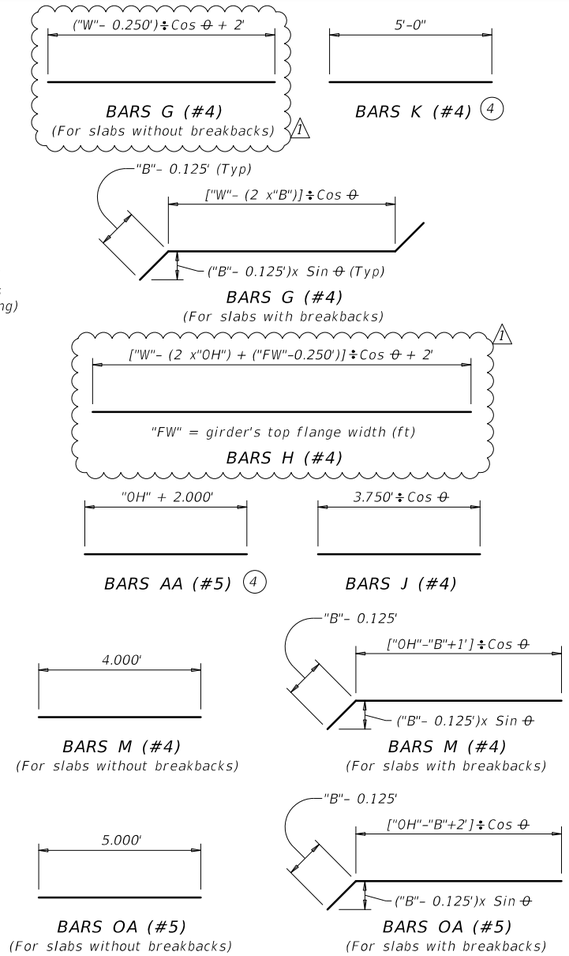

GENERAL NOTES:

Designed according to AASHTO LRFD Bridge Design Specifications.
These details are restricted to Prestressed Concrete I-Girder Spans.
These details are to be used in conjunction with the Span Details and PCP standard (if prestressed concrete panels are used).
When Option 2 from PCP standard is used, provide Bars AA, G, K and OA in the slab.

MATERIAL NOTES:

Provide Grade 60 reinforcing steel.
If slab reinforcing steel is shown on the Slab Details to be epoxy coated, then Bars AA, G, K, H, J, M and OA must be epoxy coated.
Provide bar laps, where required, as follows:
Uncoated ~ #4 = 1'-5"
Epoxy Coated ~ #4 = 2'-1"

Cover dimensions are clear dimensions, unless noted otherwise.
Reinforcing bar dimensions shown are out-to-out of bar.

HL93 LOADING

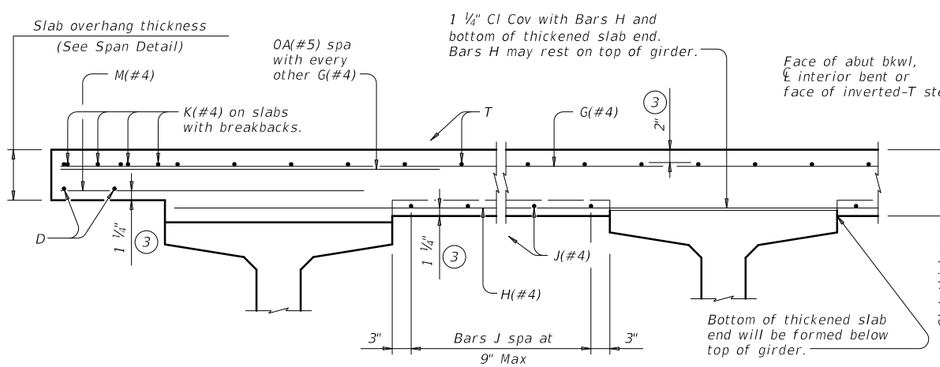

2" AND MORE OF HAUNCH

LESS THAN 2" OF HAUNCH

TYPICAL TRANSVERSE SECTION

(Showing Prestressed Conc I-Girders at ℄ Brg)

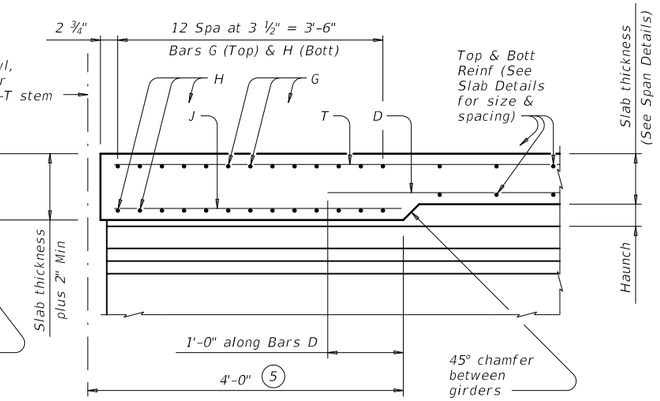

SECTION A-A

(Showing with 2" and more of haunch)

Texas Department of Transportation

Bridge Division Standard

THICKENED SLAB END DETAILS

PRESTRESSED CONCRETE I-GIRDER SPANS

IGTS (MOD)

FILE: igtssts1.dgn	DN: TxDOT	CK: TxDOT	DW: JTR	CK: TxDOT
©TxDOT October 2015	CONT	SECT	JOB	HIGHWAY
REVISIONS	0849	01	046	TALLEY ROAD
1 Revised bar lengths for phased construction. KH 01/17	DIST		COUNTY	SHEET NO.
			BEXAR	409

DISCLAIMER:
The use of this standard is governed by the "Texas Engineering Practice Act". No warranty of any kind is made by TxDOT for any purpose whatsoever. TxDOT assumes no responsibility for the conversion of this standard to other formats or for incorrect results or damages resulting from its use.

DATE:
FILE:

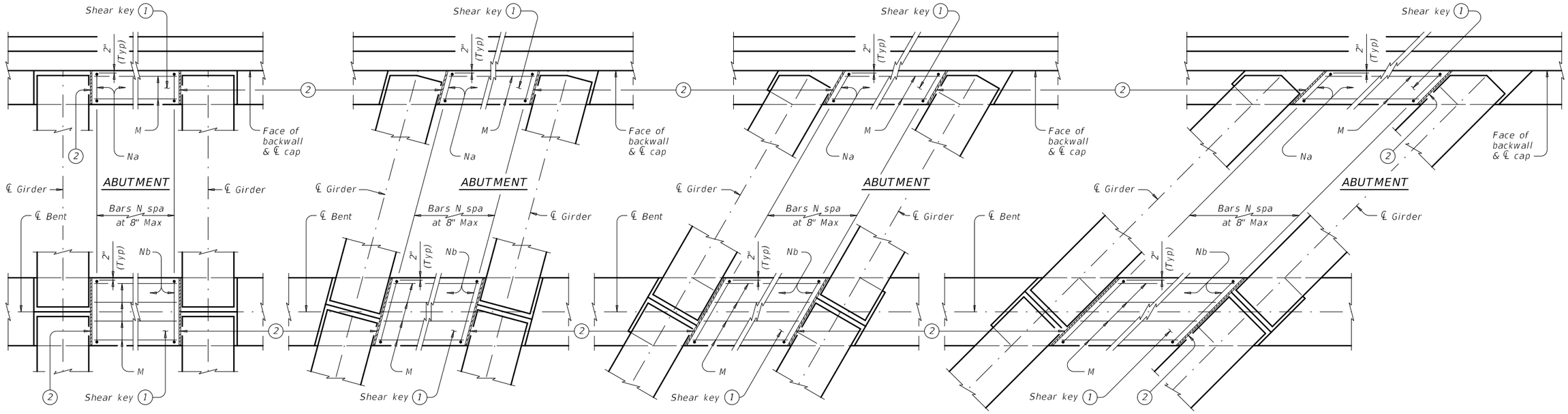

PARTIAL PLANS WITH NO SKEW

Showing shear keys on 3'-6" wide caps. 4'-0" caps similar.

PARTIAL PLANS WITH 15° SKEW

Showing shear keys on 3'-6" wide caps. 4'-0" caps similar.

PARTIAL PLANS WITH 30° SKEW

Showing shear keys on 3'-6" wide caps. 4'-0" caps similar.

PARTIAL PLANS WITH 45° SKEW

Showing shear keys on 3'-6" wide caps. 4'-0" caps similar.

(1) Place shear keys on the upstream side of structure between outside girder and next adjacent girder, unless shown otherwise on plans.

(2) UHMW polyethylene wear pad. (Typ)

(3) Leave a ¼" gap plus or minus between girder and face of wear pad. Cast wear pad with shear key, smooth side facing girder. Care must be taken to keep concrete from flowing under girder. Slope top of shear keys in accordance with Item 420.4.9, "Treatment and Finishing of Horizontal Surfaces."

(4) Measure at higher bearing seat elevation forward or back. Dimension based on typical bearing pad and bearing seat. Increase as necessary to maintain 5" overlap.

(5) With No Skew = 1'-8 ¼", measured along ℄ cap.
With Skew = 1'-8 ¼" ÷ Cos Skew, measured along ℄ cap.

(6) With No Skew = 1'-4 ¼", measured along ℄ cap.
With Skew = 1'-4 ¼" ÷ Cos Skew, measured along ℄ cap.

(7) Face of UHMW polyethylene wear pad. Smooth side of pad facing girder.

(8) Abutments = ½ Cap width.
Interior bents = Cap width.

(9) Abutments = ½ Cap width ÷ Cos Skew.
Interior bents = Cap width ÷ Cos Skew.

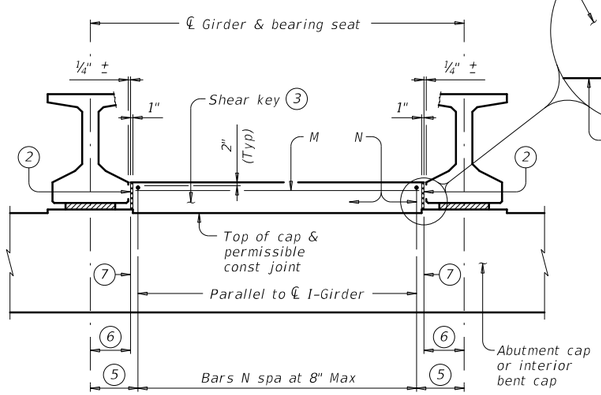

PARTIAL ELEVATION OF ABUTMENT OR INTERIOR BENT CAP (1)

Showing shear key with girder Type Tx46.
Other I-Girder types similar.

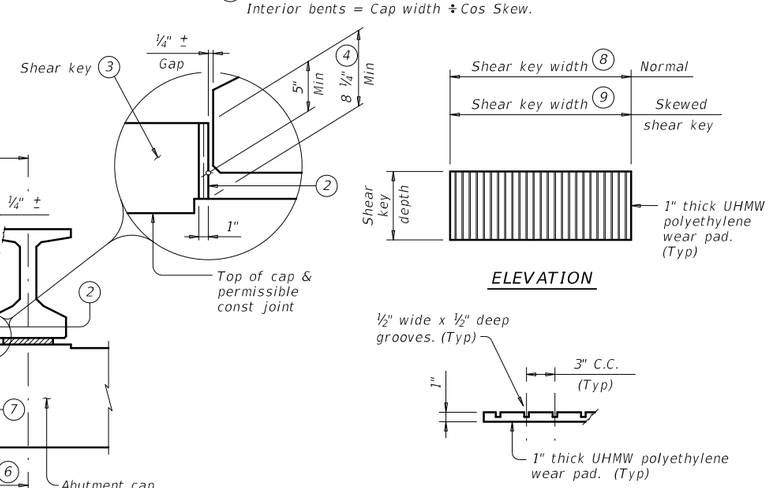

ULTRA HIGH MOLECULAR WEIGHT (UHMW) POLYETHYLENE WEAR PAD DETAILS

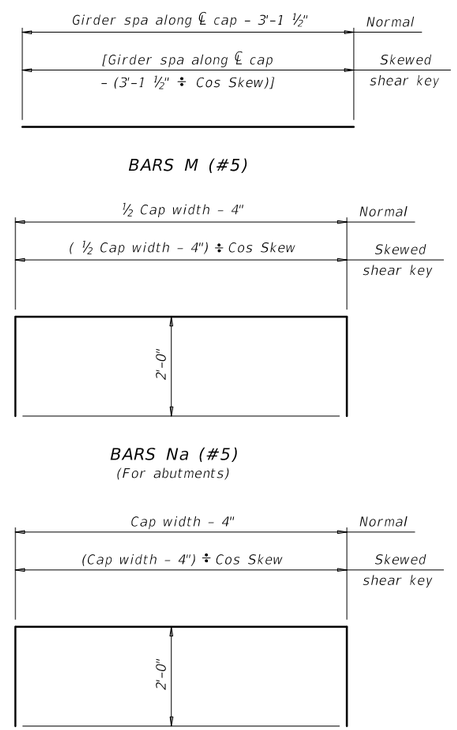

CONSTRUCTION NOTES:

Provide Class "C" concrete (f'c = 3,600 psi). Provide Class "C" (HPC) if shown elsewhere on the plans.

Provide Grade 60 reinforcing steel.

Provide epoxy coated reinforcing steel for shear key if abutment or interior bent reinforcing steel is epoxy coated.

Provide Ultra High Molecular Weight (UHMW) polyethylene wear pads in accordance with ASTM D6712.

GENERAL NOTES:

Designed according to AASHTO LRFD Bridge Design Specifications.

Details showing skew are drawn showing right forward skew. See Bridge Layout for actual skew direction.

These details are limited to bridges skewed 45 degrees and less.

This standard is only applicable for I-Girders.

Modify details for bearing conditions, and girder spacing not shown on this standard. Details do not account for sole plate or pedestal bearing seat.

Include shear key concrete in abutment or bent concrete for payment.

UHMW polyethylene wear pads are subsidiary to Class "C" concrete.

Cover dimensions are clear dimensions, unless noted otherwise.
Reinforcing bar dimensions shown are out-to-out of bar.

Texas Department of Transportation — Bridge Division Standard

SHEAR KEY DETAILS
PRESTR CONCRETE I-GIRDERS

IGSK

FILE: igskstds.dgn	DN: TxDOT	CK: TxDOT	DW: JTR	CK: AES
©TxDOT October 2015	CONT	SECT	JOB	HIGHWAY
REVISIONS	0849	01	046	TALLEY ROAD
	DIST		COUNTY	SHEET NO.
			BEXAR	410

DISCLAIMER:
The use of this standard is governed by the "Texas Engineering Practice Act". No warranty of any kind is made by TxDOT for any purpose whatsoever. TxDOT assumes no responsibility for the conversion of this standard to other formats or for incorrect results or damages resulting from its use.

DATE:
FILE:

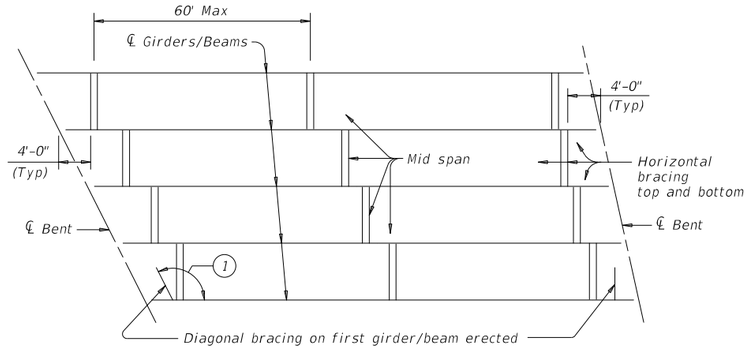

ERECTION BRACING

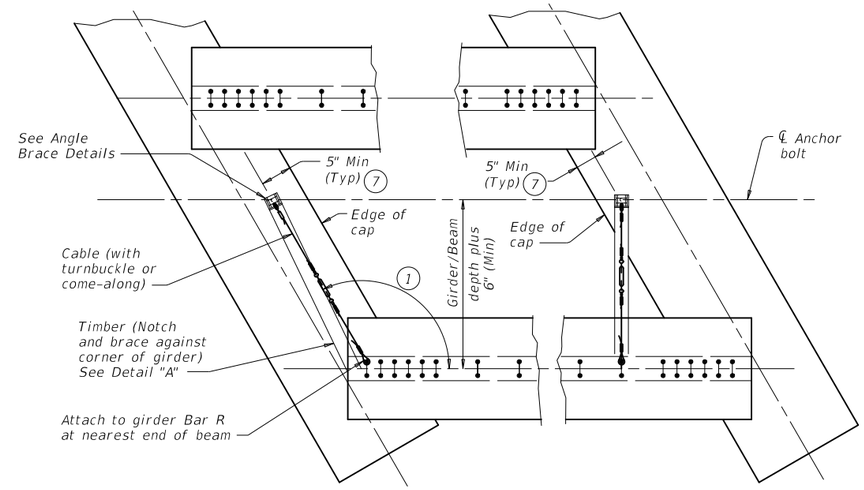

PLAN

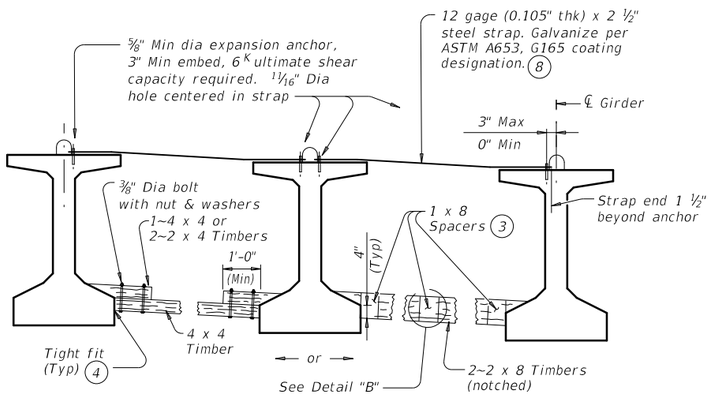

FOR ERECTION BRACING, OPTION 1

(This option is not allowed when slab is formed with PMDF or plywood.)

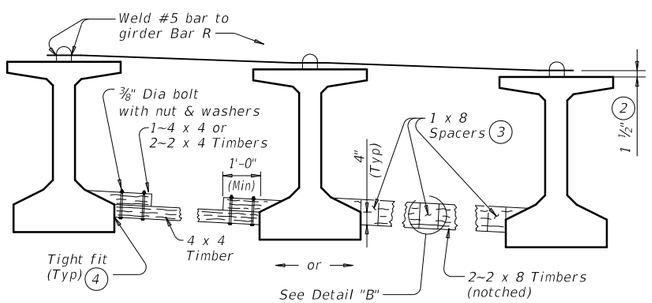

FOR ERECTION BRACING, OPTION 2

HORIZONTAL BRACING DETAILS 5

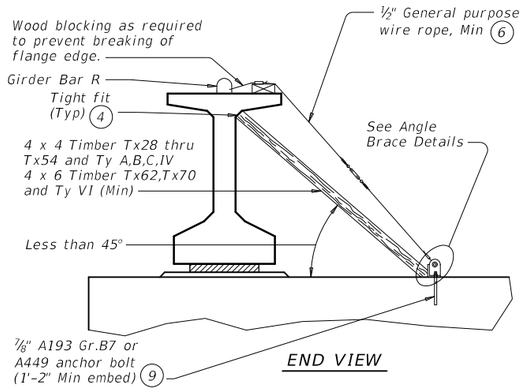

END VIEW

DIAGONAL BRACING DETAILS 5

(To be used on both ends of the first girder/beam erected in the span in each phase.)

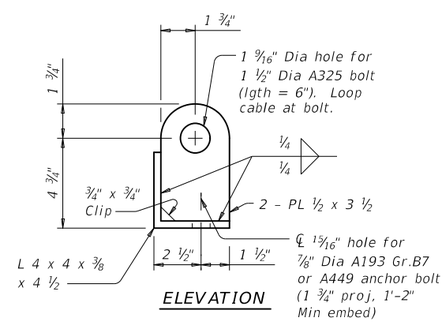

ELEVATION

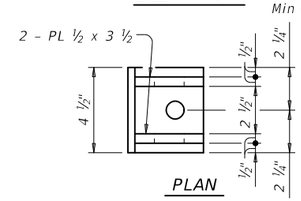

PLAN

ANGLE BRACE DETAILS

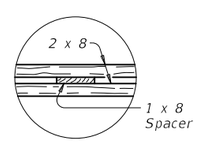

PLAN

DETAIL "B"

HAULING & ERECTION:

The Contractor's attention is directed to the possible lateral instability of prestressed concrete girders and beams over 130' long, especially during hauling and erection. The use of the following methods to improve stability is encouraged: Locate lifting devices at the maximum practical distance from girder ends; use external lateral stiffening devices during hauling and erection; lift with vertical lines using two machines; and take care in handling to minimize inertial and impact forces.

ERECTION BRACING:

Erection bracing details shown are considered the minimum for fulfilling the bracing requirements of Item 425.

Required erection bracing must be placed immediately after erection of each girder and remain in place until additional bracing as required for slab placement is in place. This standard is needed in all cases to meet requirements for Slab Placement Bracing.

PHASED CONSTRUCTION:

Place erection and slab placement bracing for all girders in a phase as shown in these details. For phases after first, also place erection and slab placement bracing between outer girder of completed phase and adjacent girder of current phase. When the phase construction joint is between girders, top bracing can be omitted.

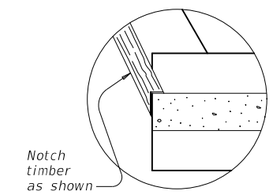

DETAIL "A"

1. If angle shown exceeds 120 degrees, move diagonal brace to other side of girder/beam and place square to girder/beam. This may prevent exterior girder from being erected first.
2. Place and weld #5 bars as shown during erection. If forming deck with prestressed panels, bars can be temporarily removed, one at a time, during panel erection. Re-install bar prior to additional panel erection. Bars can rest on panels and be bent down and welded to girder Bars R (See Sheet 2 of 2).
3. Clear distance between spacers must not exceed 3'. Nail together with 16d nails.
4. Use wedges as necessary to obtain tight fit. Nail wedges to timbers.
5. Pressure treated landscape timbers can not be used.
6. All hardware used with cable must be able to develop a minimum 25 kips breaking strength. Use thimbles at all loops in cable. Install cable clamps with saddles bearing against the live end and U-bolts bearing aginst the dead end.
7. It is acceptable to tie anchor bolts to cap reinforcement.
8. Prior to installing, field bend strap to lay flush on both girders' top flange and slope between flange tips.
9. Anchor bolt may be drilled and epoxied in place. Provide 25k minimum pullout. Core drill hole.

DISCLAIMER:
The use of this standard is governed by the "Texas Engineering Practice Act". No warranty of any kind is made by TxDOT for any purpose whatsoever. TxDOT assumes no responsibility for the conversion of this standard to other formats or for incorrect results or damages resulting from its use.

DATE:
FILE:

SHEET 1 OF 2

Texas Department of Transportation — Bridge Division Standard

MINIMUM ERECTION AND BRACING REQUIREMENTS

PRESTRESSED CONCRETE I-GIRDERS AND I-BEAMS

MEBR(C)

FILE: mebcsts1.dgn	DN: TxDOT	CK: TxDOT	DW: TxDOT	CK: TxDOT
©TxDOT October 2015	CONT	SECT	JOB	HIGHWAY
REVISIONS	0849	01	046	TALLEY ROAD
	DIST		COUNTY	SHEET NO.
			BEXAR	411

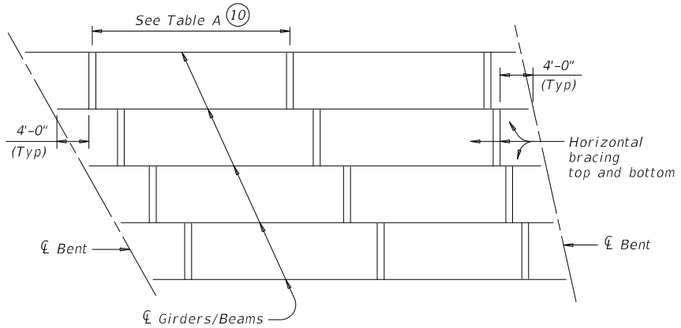

SLAB PLACEMENT BRACING

TABLE A

OPTION 1-RIGID BRACING (STEEL STRAP)		
Girder or Beam Type	Maximum Bracing Spacing	
	Slab Overhang less than 4'-0" (11)	Slab Overhang 4'-0" and greater (11)
Tx28	¼ points	¼ points
Tx34	¼ points	¼ points
Tx40	¼ points	⅛ points
Tx46	¼ points	⅛ points
Tx54	¼ points	⅛ points
Tx62	¼ points	⅛ points
Tx70	¼ points	⅛ points
A	⅛ points	⅛ points
B	⅛ points	⅛ points
C	⅛ points	⅛ points
IV	¼ points	⅛ points
VI	¼ points	⅛ points

OPTION 2-FLEXIBLE BRACING (NO. 5 OVER PCP)		
Girder or Beam Type	Maximum Bracing Spacing	
	Slab Overhang less than 4'-0" (11)	Slab Overhang 4'-0" and greater (11)
Tx28	¼ points	⅛ points
Tx34	¼ points	⅛ points
Tx40	¼ points	⅛ points
Tx46	¼ points	⅛ points
Tx54	¼ points	⅛ points
Tx62	¼ points	⅛ points
Tx70	¼ points	⅛ points
A	2.0 ft	1.5 ft
B	3.0 ft	2.0 ft
C	4.5 ft	2.0 ft
IV	¼ points	4.0 ft
VI	¼ points	4.0 ft

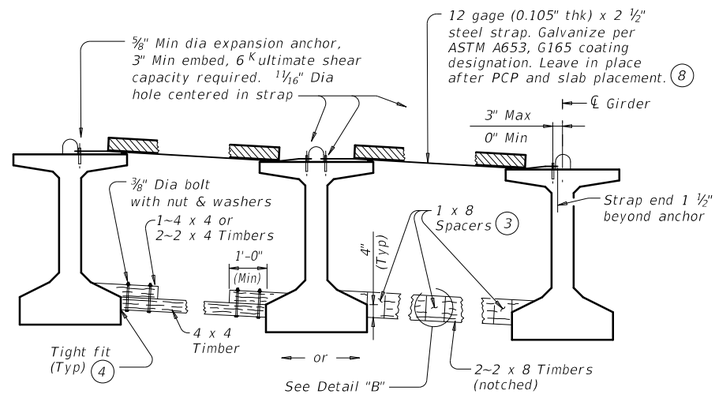

FOR SLAB PLACEMENT BRACING, OPTION 1 - RIGID

(Showing slab formed with PCP. This option is not allowed when slab is formed with PMDF or plywood.)

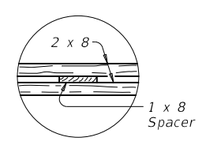

PLAN

DETAIL "B"

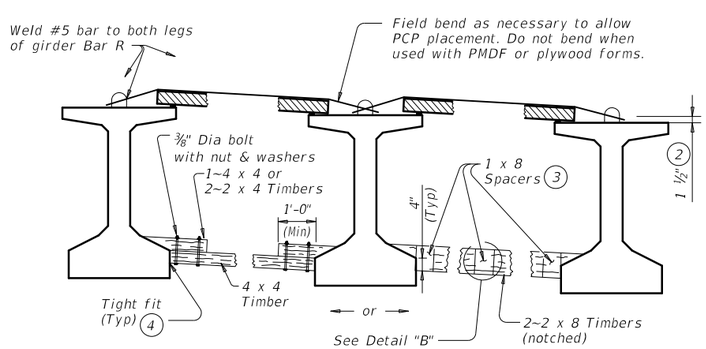

FOR SLAB PLACEMENT BRACING, OPTION 2 - FLEXIBLE

(Showing slab formed with PCP.)

HORIZONTAL BRACING DETAILS (5)

(2) Place and weld #5 bars as shown during erection. If forming deck with prestressed panels, bars can be temporarily removed, one at a time, during panel erection. Re-install bar prior to additional panel erection. Bars can rest on panels and be bent down and welded to girder Bars R.

(3) Clear distance between spacers must not exceed 3'. Nail together with 16d nails.

(4) Use wedges as necessary to obtain tight fit. Nail wedges to timbers.

(5) Pressure treated landscape timbers can not be used.

(8) Prior to installing, field bend strap to lay flush on both girders' top flange and slope between flange tips.

(10) Bracing spacing (¼ and ⅛ points) measured between first and last typical brace location.

(11) Measure slab overhang from centerline of girder or beam. When overhang varies in span, determine bracing spacing based on largest overhang.

SLAB PLACEMENT BRACING:

The details for slab placement bracing are considered minimum for fulfilling the requirements of Specification Items 422 and 425.

Required slab placement bracing must remain in place until slab concrete has attained a compressive strength of 3000 psi.

GENERAL NOTES:

Bracing details for spans longer than 150' are not provided. The Contractor must submit proposed bracing details for such conditions to the Engineer for approval prior to erection.

Systems equal to or better than those shown may be used provided details of such systems are submitted to and approved by the Engineer prior to erection.

Use of these systems or details does not relieve the Contractor of the responsibility for the adequacy of the bracing and the safety of the structure.

Removal of bracing for short periods of time to align girders and beams is permissible.

All turn-buckles, come-alongs, anchors and other connections must be capable of developing the full strength of the cable shown.

Furnish anchor bolts and nuts in accordance with Item 449, "Anchor Bolts".

Texas Department of Transportation — Bridge Division Standard

MINIMUM ERECTION AND BRACING REQUIREMENTS

PRESTRESSED CONCRETE I-GIRDERS AND I-BEAMS

MEBR(C)

FILE: mebcsts1.dgn	DN: TxDOT	CK: TxDOT	DW: TxDOT	CK: TxDOT
©TxDOT October 2015	CONT	SECT	JOB	HIGHWAY
REVISIONS	0849	01	046	TALLEY ROAD
	DIST		COUNTY	SHEET NO.
			BEXAR	412

DISCLAIMER:
The use of this standard is governed by the "Texas Engineering Practice Act". No warranty of any kind is made by TxDOT for any purpose whatsoever. TxDOT assumes no responsibility for the conversion of this standard to other formats or for incorrect results or damages resulting from its use.

DATE:
FILE:

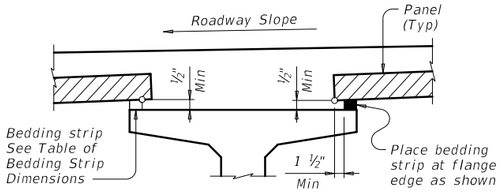

NORMAL GRADING DETAIL (1)

Showing Prestressed Concrete I-Girders.
(Other Beam Types Similar)

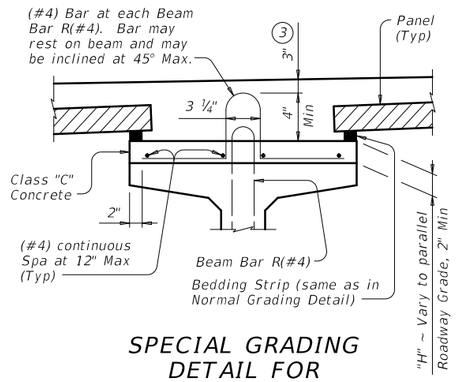

SPECIAL GRADING DETAIL FOR CONCRETE BEAMS

Showing Prestressed Concrete I-Girders.
(Other Beam Types Similar)

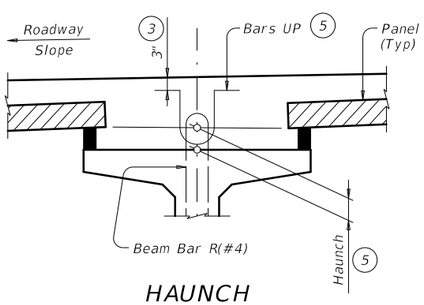

HAUNCH REINFORCING DETAIL

Showing Prestressed Concrete I-Girders.
(Other Beam Types Similar)

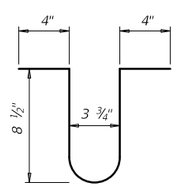

BARS UP (#4) (5)

TABLE OF BEDDING STRIP DIMENSIONS		
WIDTH	HEIGHT (2)	
	Min	Max
1" (Min)	½"	2"
1 ¼"	½"	2 ½"
1 ½"	½"	3"
1 ¾"	½"	3 ½"
2" (Max)	½"	4"

(1) To reduce the quantity of cast-in-place concrete, bedding strip thickness may be increased in ¼" increments. Bedding strips must be comprised of one layer. Bond bedding strips to the beams with an adhesive compatible with bedding strips. Bedding strips over 2.5" high may need to be bonded to panels. The same thickness strip must be used under any one panel edge and the maximum change in thickness between adjacent panels is ¼". Alternatively, bedding strips may be cut to grade. Panels may be supported by an alternate method, using a commercial product, if approved by the Engineer of Bridge Design, Bridge Division. If bedding strips exceed 4" high, use Special Grading Detail for Concrete Beams or submit an alternate method to the Bridge Division for approval.

(2) Height must not exceed twice the width.

(3) Provide clear cover as indicated unless otherwise shown on Span Details.

(4) See Span Details and Thickened Slab End Details for top slab reinforcement and clear cover. Transverse top slab reinforcement may rest on top of prestressed concrete panels if necessary to maintain clear cover.

(5) Space Bars UP(#4) with Beam Bars R(#4) in all areas where measured haunch exceeds 3" or 3 ½" with Prestressed Concrete I-Girders. Epoxy coating for Bars UP is not required.

(6) Do not locate construction Joints on top of a panel.

(7) Butt adjacent bedding strips together with adhesive. Cut v-notches, approx ¼" deep, in the top of the bedding strips at 8' o.c..

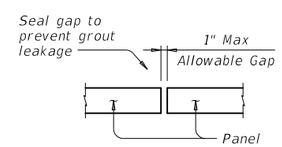

TYPICAL SECTION AT PANEL JOINT

(Panel reinforcing not shown for clarity.)
The gap cannot be considered as a panel fabrication tolerance.

CONSTRUCTION NOTES:

Erected panels must bear uniformly on bedding strips of extruded polystyrene placed along top flange edges.

If additional blocking is needed, special grading details for supporting the panels and extra reinforcing between beam and slab will be considered subsidiary to deck construction.

Bars U, shown on PCP-FAB, may be bent over or cut off if necessary.

Care must be taken to ensure proper cleaning of construction debris and consolidation of concrete mortar under the edges of the panels. Bedding strips must be placed at beam flange edges so that adequate space is provided for the mortar to flow a minimum of 1 ½" under the panels as the slab concrete is placed.

To allow the proper amount of mortar to flow between beam and panel, the minimum vertical opening must be at least ½". Roadway cross-slope reduces the opening available for entry of the mortar. Bedding strips varying in thickness across the beam are therefore required.

For clear span between U-beams less than or equal to 18", see Permissible Slab Forming Detail on Miscellaneous Slab Detail sheets, UBMS.

MATERIAL NOTES:

Provide Grade 60 reinforcing steel in the cast-in-place slab. See Table of Reinforcing Steel for size and spacing of reinforcement.

If the top and bottom layer of reinforcing steel is shown on the Span Details to be epoxy coated, then the D, E, P, & Z bars must be epoxy coated.

Provide bar Laps, where required, as follows:
Uncoated ~ #4 = 1'-5"
Epoxy Coated ~ #4 = 2'-1"

GENERAL NOTES:

Designed according to AASHTO LRFD Specifications.

Panel placement may follow either Option 1 or Option 2 except Option 1 must be used if the skew exceeds 45 degrees.

Use of Prestressed Concrete Panels is not permitted for horizontally curved steel plate or tub girders. See Span Details for other possible restrictions on their use.

These details are to be used in conjunction with the Span Details, PCP-FAB and other applicable Standard drawings.

Any additional reinforcement or concrete required on this standard is considered subsidiary to the bid Item "Reinforced Concrete Slab".

Cover dimensions are clear dimensions, unless noted otherwise.
Reinforcing bar dimensions shown are out-to-out of bar.

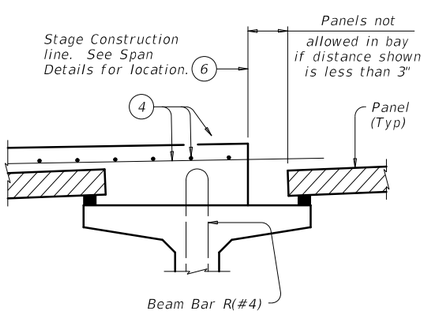

PRESTR CONC I-GIRDERS

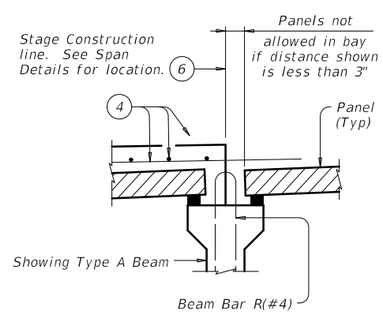

PRESTR CONC I-BEAMS

STAGE CONSTRUCTION LIMITATIONS

(Other Beam Types Similar)

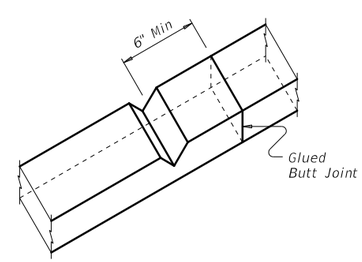

BEDDING STRIP DETAIL (7)

HL93 LOADING — SHEET 1 OF 4

Texas Department of Transportation — Bridge Division Standard

PRESTRESSED CONCRETE PANELS
DECK DETAILS

PCP

FILE: pcpstde1.dgn	DN: TxDOT	CK: TxDOT	DW: JTR	CK: JMH
©TxDOT January 2015	CONT	SECT	JOB	HIGHWAY
REVISIONS	0849	01	046	TALLEY ROAD
	DIST		COUNTY	SHEET NO.
			BEXAR	413

DISCLAIMER:
The use of this standard is governed by the "Texas Engineering Practice Act". No warranty of any kind is made by TxDOT for any purpose whatsoever. TxDOT assumes no responsibility for the conversion of this standard to other formats or for incorrect results or damages resulting from its use.

DATE:
FILE:

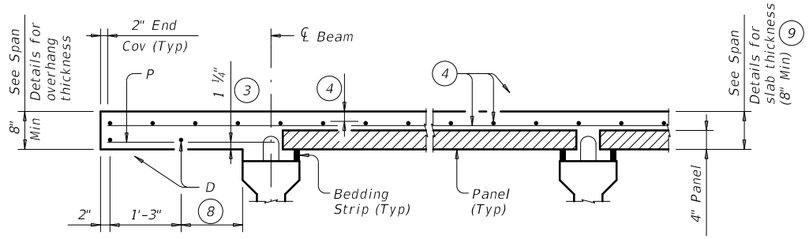

PRESTRESSED CONCRETE I-BEAMS

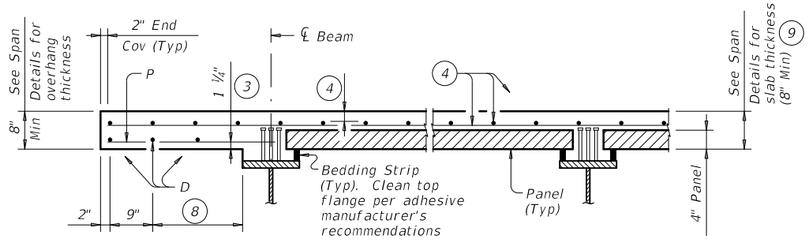

STEEL BEAMS

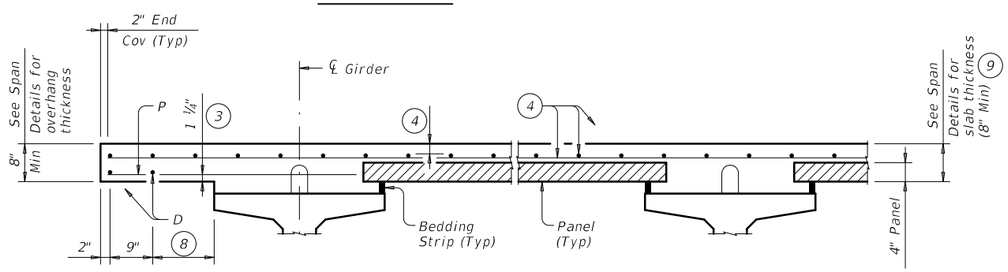

PRESTRESSED CONCRETE I-GIRDERS

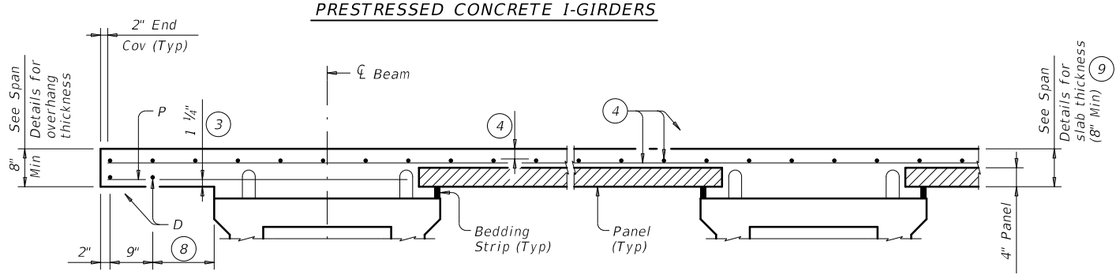

PRESTRESSED CONCRETE X-BEAMS

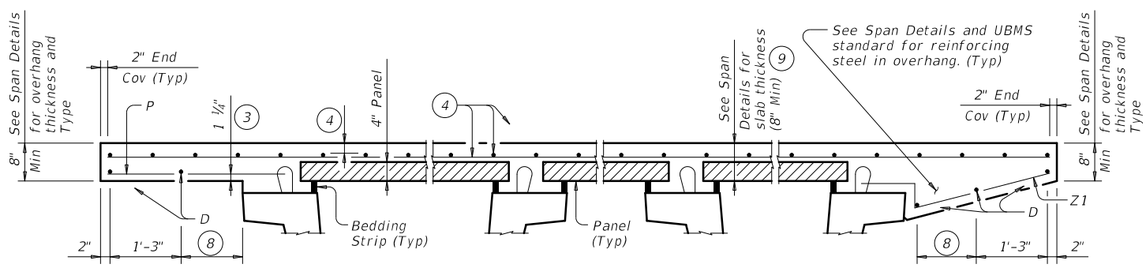

NORMAL OVERHANG WITH PRESTR CONC U-BEAMS

TYPICAL PART TRANSVERSE SECTIONS

SLOPED OVERHANG WITH PRESTR CONC U-BEAMS

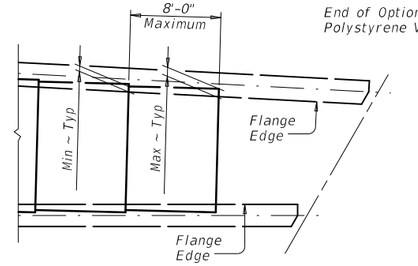

AT FLARED BEAMS OR GIRDERS

See PCP-FAB standard for Min and Max dimensions based on Bm/Girder type.

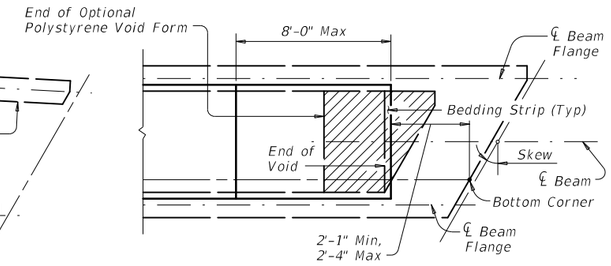

OVER CONC U-BEAMS

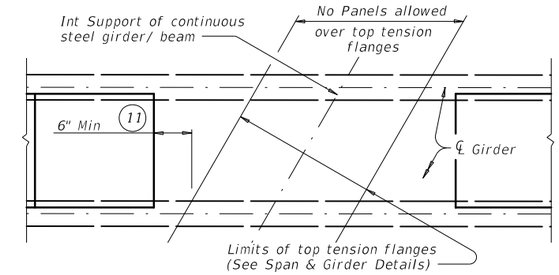

AT INT SUPPORTS OF CONTINUOUS STEEL GIRDERS

PART PLANS OF PANEL PLACEMENT

(3) Provide clear cover as indicated unless otherwise shown on Span Details.

(4) See Span Details and Thickened Slab End Details for top slab reinforcement and clear cover. Transverse top slab reinforcement may rest on top of prestressed concrete panels if necessary to maintain clear cover.

(7) Butt adjacent bedding strips together with adhesive. Cut v-notches, approx ¼" deep, in the top of the bedding strips at 8' o.c..

(8) Equally space additional bar if more than 1'-3" Max.

(9) The actual thickness constructed may exceed the slab thickness shown on the Span Details but the extra thickness may be no more than 2" (1" for Prestressed Concrete U-Beams and Steel Beams). Bearing Seat Elevations or finished grade may be adjusted.

(10) Field adjust Bars Z1(#4) to match actual slope of slab overhangs. Width of slab overhang will vary along span with curved slab edges. Adjust Bar Z1(#4) dimensions to maintain proper cover. Bars Z2(#4) are located at Inv-T stems only.

(11) Location of concrete placement sequence boundaries and bolted field splices should be considered by the contractor in determining panel limits.

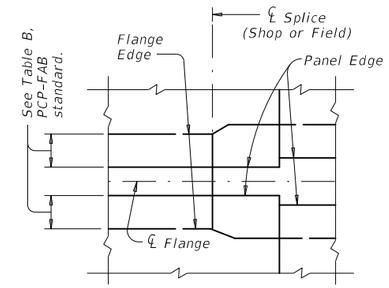

PLAN AT SPLICE

(Showing Steel Bms with flange width transition)

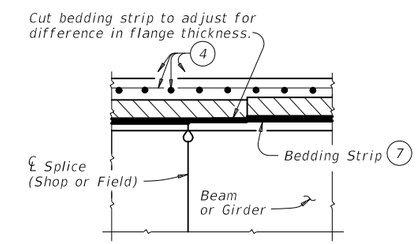

ELEVATION AT SPLICE

(Showing Steel Bms with different flange thickness)

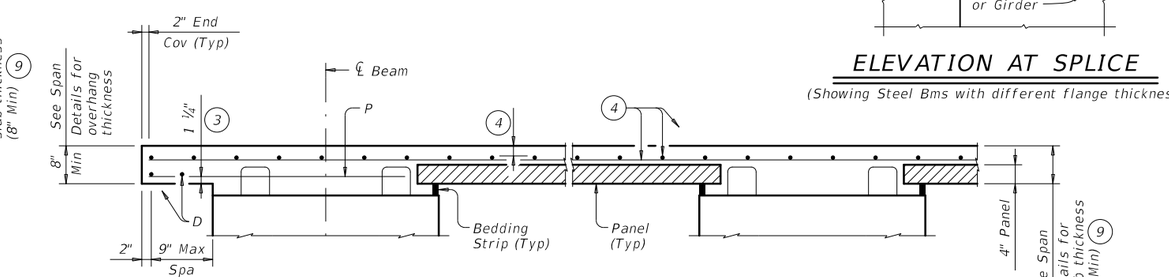

PRESTRESSED CONCRETE SPREAD SLAB BEAMS

Bars P over exterior beams are still required when no overhang is used. In this case, only one Bar D, 2" from slab edge, is required.

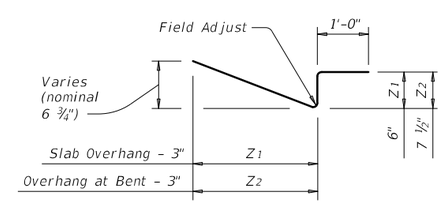

BARS Z (#4) (10)

HL93 LOADING

SHEET 2 OF 4

Texas Department of Transportation

Bridge Division Standard

PRESTRESSED CONCRETE PANELS DECK DETAILS

PCP

FILE: pcpstde1.dgn	DN: TxDOT	CK: TxDOT	DW: JTR	CK: JMH
©TxDOT January 2015	CONT	SECT	JOB	HIGHWAY
REVISIONS	0849	01	046	TALLEY ROAD
	DIST		COUNTY	SHEET NO.
			BEXAR	414

DISCLAIMER:
The use of this standard is governed by the "Texas Engineering Practice Act". No warranty of any kind is made by TxDOT for any purpose whatsoever. TxDOT assumes no responsibility for the conversion of this standard to other formats or for incorrect results or damages resulting from its use.

DATE:
FILE:

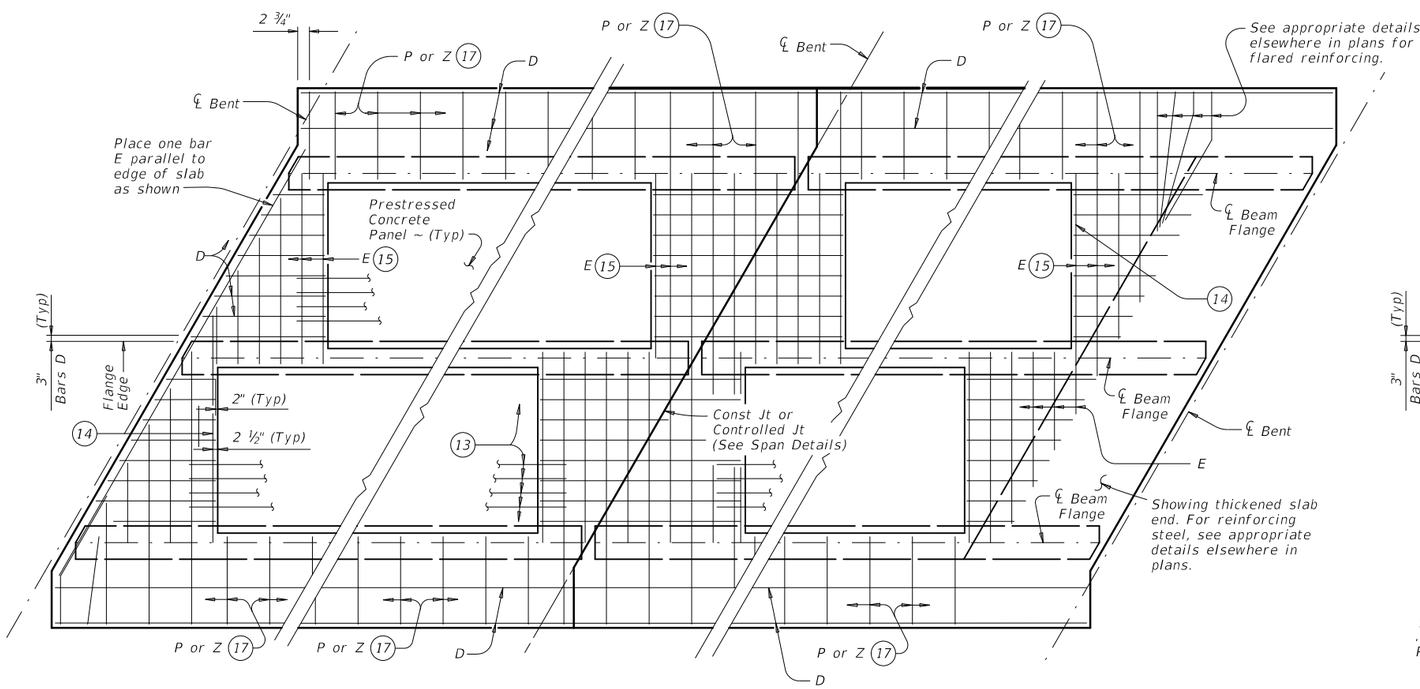

AT ALL SPAN ENDS UNLESS NOTED OTHERWISE

AT INTERIOR BENTS

AT THICKENED END SLABS

OPTION 1 ~ PLAN OF SLABS WITH NORMAL REINFORCEMENT

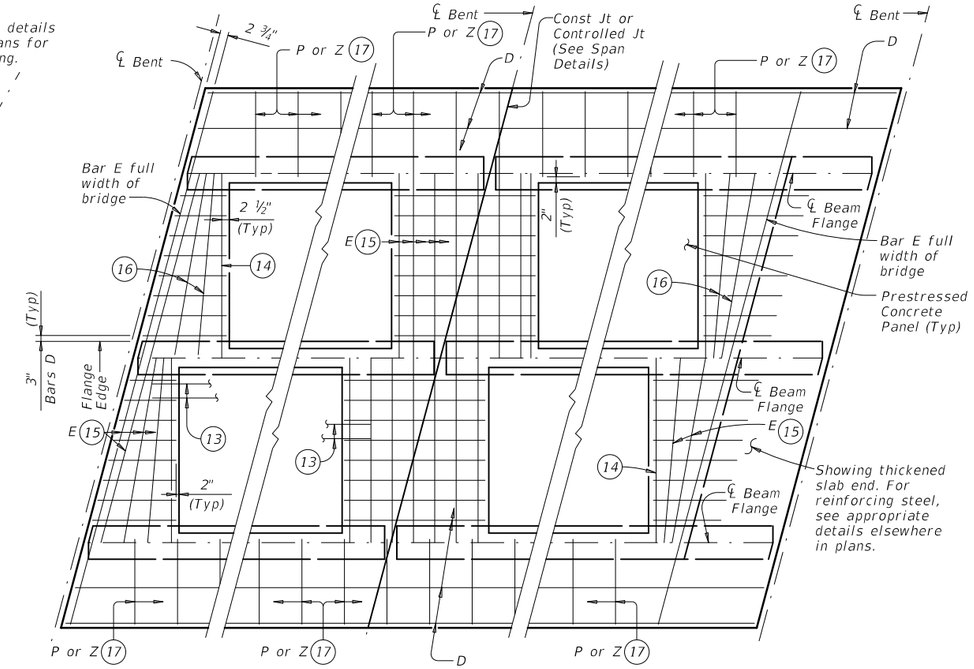

AT ALL SPAN ENDS UNLESS NOTED OTHERWISE

AT INTERIOR BENTS

AT THICKENED END SLABS

OPTION 1 ~ PLAN OF SLABS WITH SKEWED REINFORCEMENT

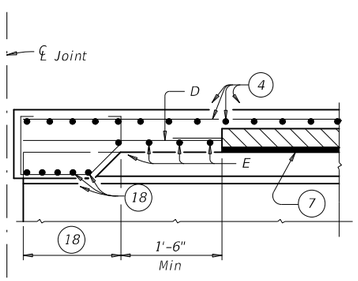

AT THICKENED SLAB ENDS FOR PRESTR CONC U-BMS

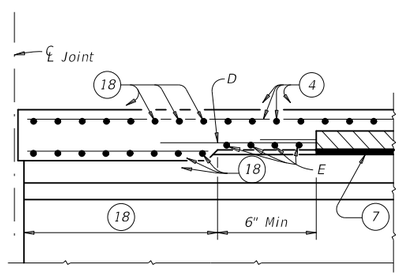

AT THICKENED SLAB ENDS FOR PRESTR CONC I-BMS AND STEEL BMS

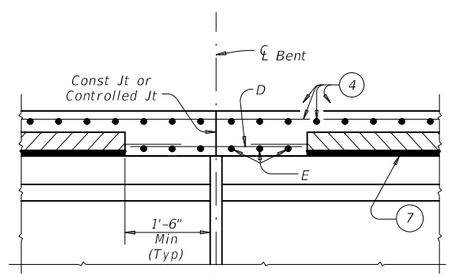

AT SLAB CONTINUOUS OVER CONVENTIONAL INTERIOR BENTS FOR ALL SIMPLE SPAN BMS

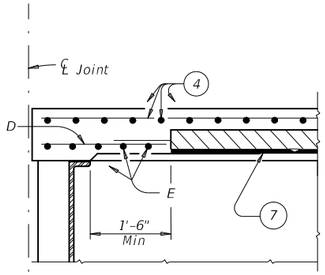

AT CONVENTIONAL END DIAPHRAGMS FOR STEEL BMS

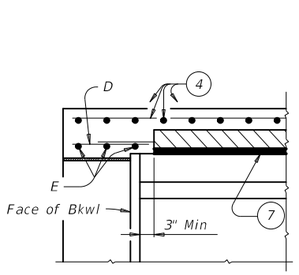

AT SLAB OVER ABUTMENT BACKWALL FOR ALL BMS

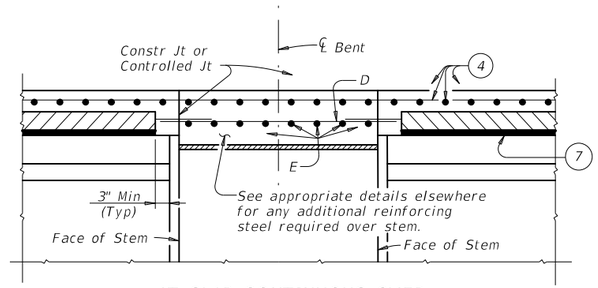

AT SLAB CONTINUOUS OVER INVERTED-T BENTS FOR ALL BMS

OPTION 1 ~ ELEVATIONS AT BEAM ENDS

(4) See Span Details and Thickened Slab End Details for top slab reinforcement and clear cover. Transverse top slab reinforcement may rest on top of prestressed concrete panels if necessary to maintain clear cover.

(7) Butt adjacent bedding strips together with adhesive. Cut v-notches, approx ¼" deep, in the top of the bedding strips at 8' o.c.

(12) Max Spacing as listed unless otherwise shown.

(13) At connection with cast-in-place slab, extend longitudinal panel reinforcement. See PCP-FAB for details.

(14) Maintain one Bar E(#4) parallel to panel ends (Typ).

(15) Bars E(#4) not continuous over beam flanges must overlap beam flange 6" Min.

(16) Add flared Bars E(#4) (Min Spa = 6", Max Spa = 12") as required at panel ends.

(17) Where possible, Bars E(#4) may be extended into overhangs to replace Bars P(#4). Bars Z(#4) are required for sloped overhangs with U-Beams.

(18) See appropriate thickened slab end details for reinforcing and limits of thickened slab end.

TABLE OF REINFORCING STEEL (12)

BAR	SIZE	Max Spa (in.)
D	#4	9
E	#4	9
P	#4	18
UP	#4	~
Z	#4	18

HL93 LOADING

Texas Department of Transportation — Bridge Division Standard

PRESTRESSED CONCRETE PANELS
DECK DETAILS

PCP

FILE: pcpstde1.dgn	DN: TxDOT	CK: TxDOT	DW: JTR	CK: JMH
©TxDOT January 2015	CONT	SECT	JOB	HIGHWAY
REVISIONS	0849	01	046	TALLEY ROAD
	DIST		COUNTY	SHEET NO.
			BEXAR	415

DISCLAIMER:
The use of this standard is governed by the "Texas Engineering Practice Act". No warranty of any kind is made by TxDOT for any purpose whatsoever. TxDOT assumes no responsibility for the conversion of this standard to other formats or for incorrect results or damages resulting from its use.

DATE:
FILE:

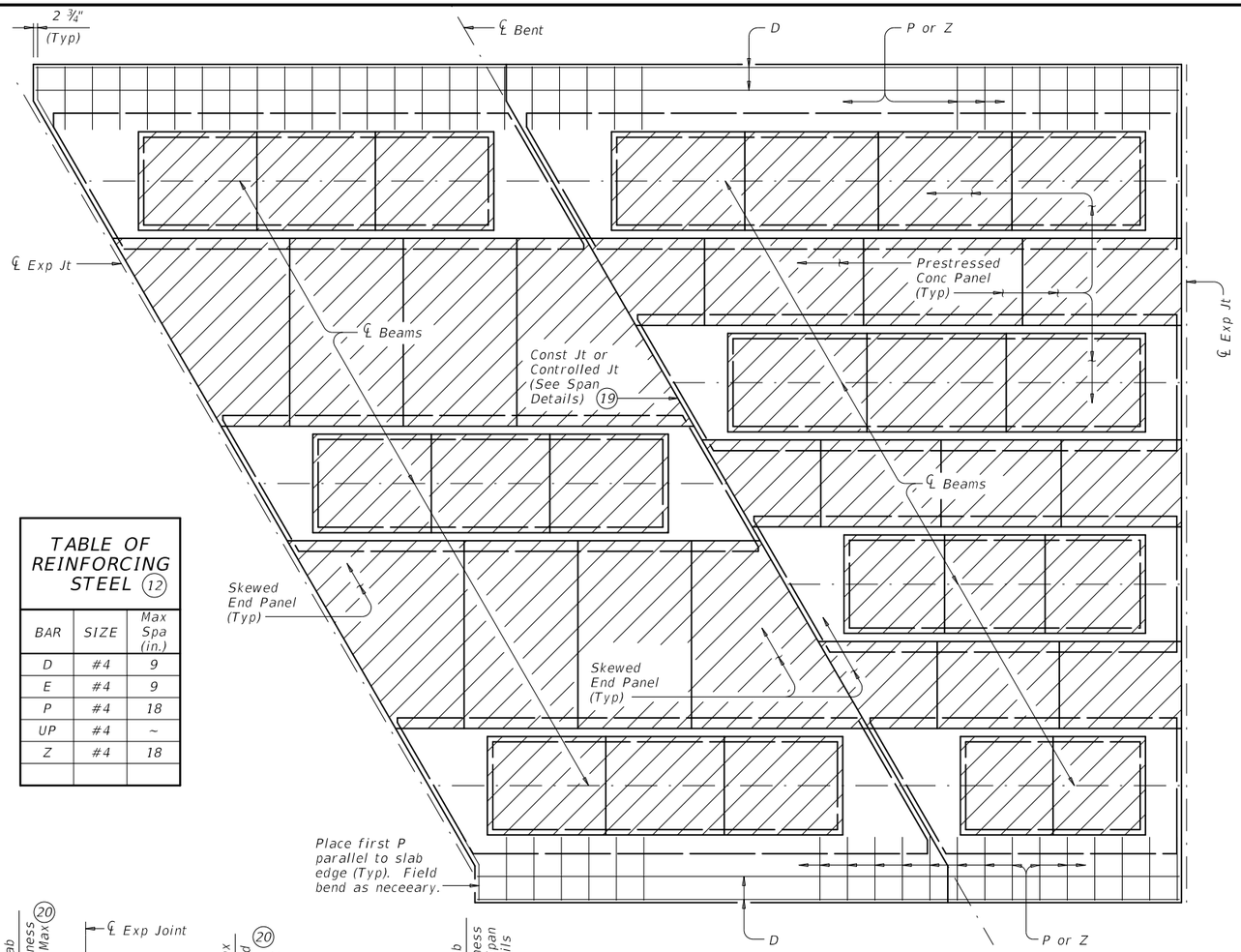

OPTION 2 ~ PLAN OF SLAB

(Showing U-Beams; other beams similar)

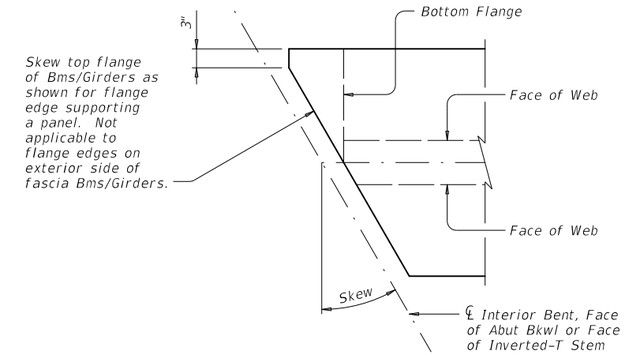

OPTION 2 ~ SHOWING MODIFICATION TO BEAM/GIRDER TOP FLANGE FOR SKEWS OVER 5°

Showing I-Bm/I-Girder, U-Bms and Steel Bms similar.

TABLE OF REINFORCING STEEL (12)		
BAR	SIZE	Max Spa (in.)
D	#4	9
E	#4	9
P	#4	18
UP	#4	~
Z	#4	18

(4) See Span Details and Thickened Slab End Details for top slab reinforcement and clear cover. Transverse top slab reinforcement may rest on top of prestressed concrete panels if necessary to maintain clear cover.

(12) Max Spacing as listed unless otherwise shown.

(19) Top Plastic Joint Former at Controlled Joints (Stress Cap, Zip Strip, Stress Lock, etc.) is not required with these Details.

(20) End panel may be set up to 2" lower to accommodate expansion joint hardware, provided bedding strip is not less than ½" thick.

(21) 1" Min, 1 ½" Max, support as necessary.

(22) Place panel within ½" of ¾" thick board.

(23) ¾" thick timber board, leave in place. Place straight, within ¼" of Centerline of Bent or face of Invt-T, across bridge width and end board at exterior flange edge of fascia beams/girders. Do not extend into overhang.

(24) Permanent galvanized steel sheet form. Removable formwork is acceptable.

(25) Place end panel within ½" of expansion joint opening. End panel cannot encroach on required expansion joint opening.

(26) Place additional (#4) bar 5'-0" in length between every slab bars T. Center (#4) bar on Joint.

(27) Place additional (#4) bar continuous 2'-6" beyond each side of Inverted-T Stem between every slab bars T.

SPECIAL OPTION 2 CONSTRUCTION NOTES:

Placing panels adjacent to expansion joints and bent centerlines prior to completing interior panel placement is recommended. Saw cutting panels to fit is acceptable when approved by the Engineer. Minimum distance from a saw cut edge to a panel strand is 1 ½".

Do not extend the longitudinal panel reinforcement into the cast-in-place slab.

Top flanges of beams and girders on skewed bridges must be modified as shown on this drawing. The Contractor is responsible for coordinating this modification with the beam fabricator prior to submitting shop drawings for approval.

Fabricator may optionally skew the whole end. When electing to skew whole end, girder end details and bearing type at conventional interior bent must be changed to use condition at abutment. Fabricator must coordinate change in bearing type, bearing centerline location, and dowel location with Engineer and Contractor. Show appropriate changes on girder and bearing shop drawings.

Bending of anchor studs of expansion joints shown on standards AJ, SEJ-A and SEJ-S(0) is permissible if necessary to clear top of end panels. The Contractor is responsible for coordinating modifications with the joint fabricator. Submit shop drawings for approval when modifications to expansion joint hardware are made.

Bedding strips under skewed end panels must conform to the requirements of Item 425 except their minimum compressive strength must be 60 psi.

Provide Bars AA, G, K and OA from standard IGTS(MOD) in the slab.

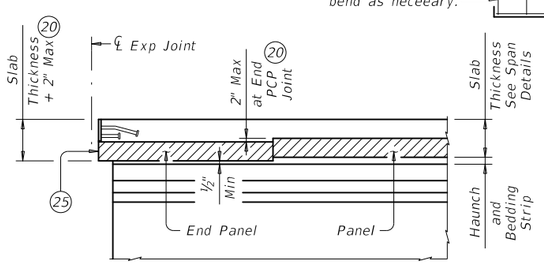

JOINTS (BETWEEN BEAMS/GIRDERS OR AT INV-T STEM)

For SEJ-A, SEJ-S(0), AJ and Type A Expansion Joints only.

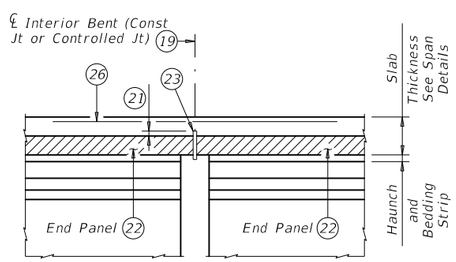

CONVENTIONAL INTERIOR BENT

Panel against Panel between Bms/Girders.

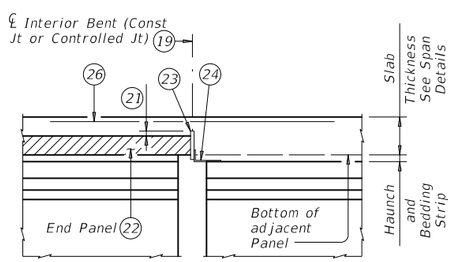

CONVENTIONAL INTERIOR BENT

Panel against Bm/Girder End in Adacent Span.

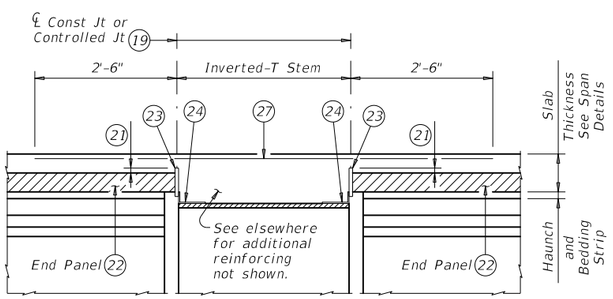

INVERTED-T BENT

Panels against Inverted-T Stem

OPTION 2 ~ ELEVATIONS AT BEAM ENDS (4)

HL93 LOADING — SHEET 4 OF 4

Texas Department of Transportation — Bridge Division Standard

PRESTRESSED CONCRETE PANELS

DECK DETAILS

PCP

FILE: pcpstde1.dgn	DN: TxDOT	CK: TxDOT	DW: JTR	CK: JMH
©TxDOT January 2015	CONT	SECT	JOB	HIGHWAY
REVISIONS	0849	01	046	TALLEY ROAD
	DIST		COUNTY	SHEET NO.
			BEXAR	416

DISCLAIMER:
The use of this standard is governed by the "Texas Engineering Practice Act". No warranty of any kind is made by TxDOT for any purpose whatsoever. TxDOT assumes no responsibility for the conversion of this standard to other formats or for incorrect results or damages resulting from its use.

DATE:
FILE:

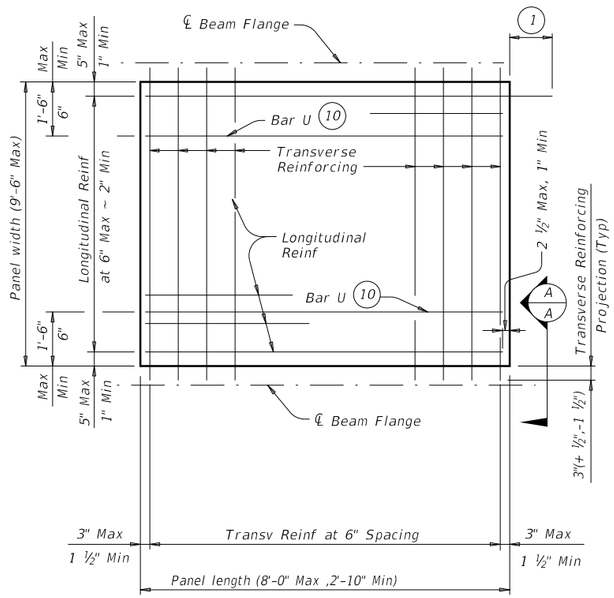

TYPICAL NON-SKEWED PANEL PLAN

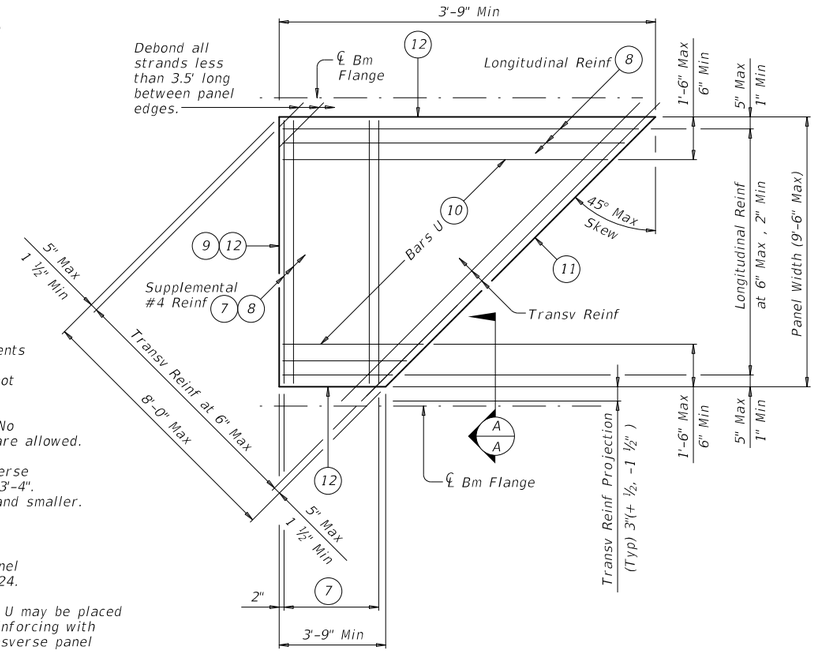

TYPICAL SKEWED END PANEL PLAN

(Only to be used with details shown elsewhere in the plans.)

TABLE A (4) (5)			
Beam Type	Normal (In.)	Min (In.)	Max (In.)
A	3	2 ½	3 ½
B	3	2 ½	3 ½
C	4	3	4 ½
IV	6	4	7 ½
VI	6 ½	4 ½	8 ½
U40 - 54	5 ½	5 ½	7
Tx28-70	6	4	7 ½
XB20 - 40	4	3	4 ½
XSB12 - 15	4	3	4 ½

TABLE B (4) (5)			
Top Flange Width	Normal (In.)	Min (In.)	Max (In.)
11" to 12"	2 ¾	2 ½	2 ¾
Over 12" to 15"	3 ¼	3	3 ¼
Over 15" to 18"	4	3	4 ¾
Over 18"	5	3 ½	6 ¼

(1) At connection with cast-in-place slab, extend longitudinal panel reinforcement 1'-0" (+2",-0") past panel end. Alternatively, provide (#3) x 2'-0" dowels at 6" Max Spacing and extend dowels 1'-0" past panel end.

(2) Four loops required per panel.

(3) Four loops required per panel. ⅜" or ½" strands may be used.

(4) Normal dimensions must be used on spans with parallel beams. Maximum and Minimum dimensions apply only to spans with flared beams.

(5) See Normal Grading Detail on PCP standard for lap requirements and bedding strip dimensions. Some laps shown in tables cannot utilize all bedding strip widths.

(6) One Splice allowed per panel. No more than two sheets of WWR are allowed.

(7) Provide (#4) bars under transverse reinforcing, 10 Spaces at 4" = 3'-4". Omit for 5 degree (1:12) skew and smaller.

(8) End Cover 2 ½" Max, 1" Min.

(9) Recess strands on indicated panel edge in accordance with Item 424.

(10) At the fabricator's option, Bars U may be placed parallel to transverse panel reinforcing with horizontal legs in plane of transverse panel reinforcing.

(11) Use length of indicated panel edge as panel width for purpose of determining type of transverse reinforcing.

(12) Timber form work permissible this edge.

GENERAL NOTES:

Provide Class H concrete for panels. Release strength f'ci=3500 psi. Minimum 28 day strength f'c=5000 psi.

Do not use epoxy-coated reinforcing steel bar or strand in panels.

Remove laitance from top panel surface.

Finish top of panel to a roughness between a No.6 and No.9 concrete surface profile, inclusive, as specified by the International Concrete Repair Institute (ICRI).

Shop drawings for the fabrication of panels will not require the Engineer's approval if fabrication is in accordance with the details shown on this standard.

A panel layout which identifies location of each panel must be developed by the Fabricator. Permanently mark each panel in accordance with the panel layout. A copy of the layout is to be provided to the Engineer.

TRANSVERSE PANEL REINFORCEMENT:

For panel widths over 5', use ⅜" or ½" Dia (270k) prestressing strands with a tension of 14.4 kips per strand.

For panel widths over 3'-6" up to and including 5', use ⅜" or ½" Dia (270k) prestressing strands with a tension of 14.4 kip per strand. Optionally, #4 Grade 60 reinforcing bars may be used in lieu of prestressed strands.

For panel widths up to 3'-6", use #4 Grade 60 reinforcing bars (prestressed strands alone are not allowed).

Place transverse panel reinforcement at panel centroid and space at 6" Max.

LONGITUDINAL PANEL REINFORCEMENT:

Any of the following options may be used for longitudinal panel reinforcement:

1. (#3) Grade 60 reinforcing steel at 6" Max Spacing. No splices allowed.
2. ⅜" Dia prestressing strands at 4 ½" Max Spacing (unstressed). No splices allowed.
3. ½" Dia prestressing strands at 6" Max Spacing (unstressed). No splices allowed.
4. Deformed Welded Wire Reinforcement (WWR) (ASTM A1064) providing 0.22 sq in per foot of panel width. Wires larger than D11 not permitted. Provide transverse wires to ensure proper handling of reinforcing. One splice per panel is allowed. See WWR Splice Detail.

No combination of longitudinal reinforcement options in a panel is allowed.

Place longitudinal panel reinforcement above or below transverse panel reinforcement. Must be placed above transverse panel reinforcement for skewed end panels with supplemental #4 reinforcement.

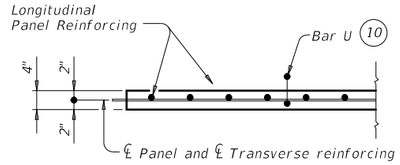

SECTION A-A

(Not Showing supplemental #4 bars for Skewed End Panels.)

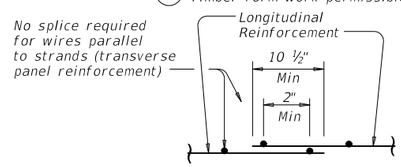

WELDED WIRE REINFORCEMENT (WWR) SPLICE DETAIL (6)

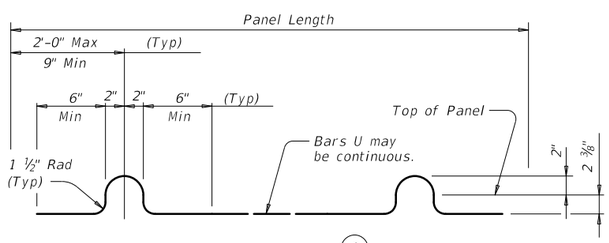

BARS U (#3) (2)

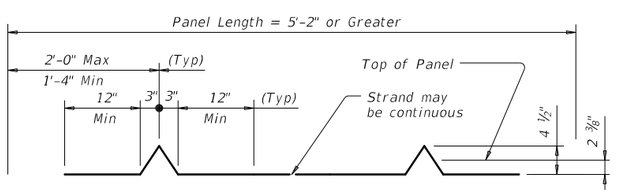

OPTIONAL STRAND FOR BARS U (3)

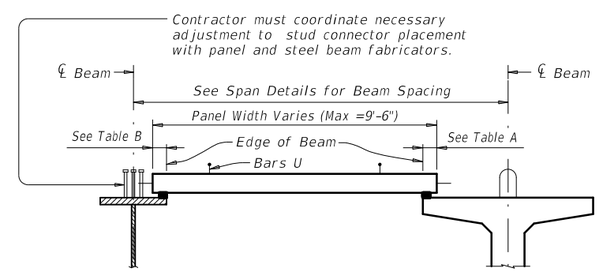

STEEL BEAMS

PRESTRESSED CONCRETE BEAMS OR GIRDERS

Typ unless noted otherwise

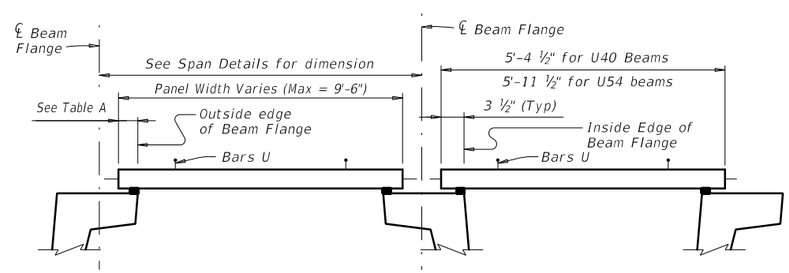

PRESTRESSED CONCRETE U-BEAMS

TYPICAL SECTIONS FOR DETERMINING PANEL WIDTH

HL93 LOADING

Texas Department of Transportation — Bridge Division Standard

PRESTRESSED CONCRETE PANEL FABRICATION DETAILS

PCP-FAB

FILE: pcpstde2.dgn	DN: TxDOT	CK: TxDOT	DW: JTR	CK: AES
©TxDOT January 2015	CONT	SECT	JOB	HIGHWAY
REVISIONS	0849	01	046	TALLEY ROAD
	DIST		COUNTY	SHEET NO.
			BEXAR	417

DISCLAIMER:
The use of this standard is governed by the "Texas Engineering Practice Act". No warranty of any kind is made by TxDOT for any purpose whatsoever. TxDOT assumes no responsibility for the conversion of this standard to other formats or for incorrect results or damages resulting from its use.

DATE:
FILE:

DISCLAIMER:
The use of this standard is governed by the "Texas Engineering Practice Act". No warranty of any kind is made by TxDOT for any purpose whatsoever. TxDOT assumes no responsibility for the conversion of this standard to other formats or for incorrect results or damages resulting from its use.

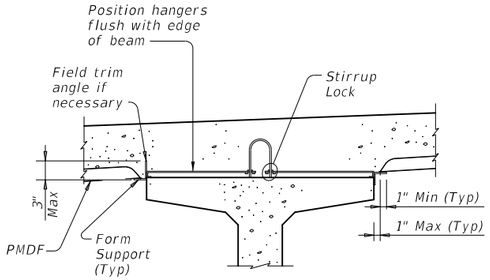

PRESTR CONC I-BEAMS AND I-GIRDERS WITH STIRRUP LOCKS

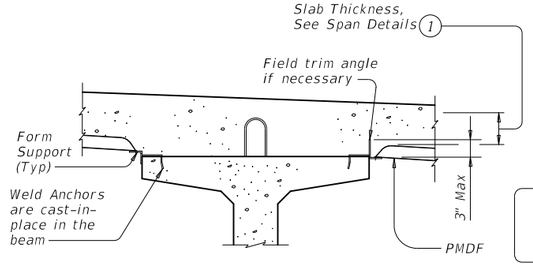

PRESTR CONC I-BEAMS AND I-GIRDERS WITH WELD ANCHORS

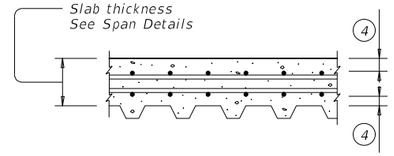

TYP LONGITUDINAL SLAB SECTION

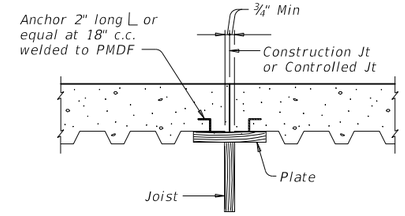

Note: In spans where PMD forms are used, timber forms must be used at construction joints. Adequate provision must be made to support edge of metal form and to provide anchorage of metal form to slab concrete where joined to wood forms.

SECTION THRU CONSTRUCTION JOINT

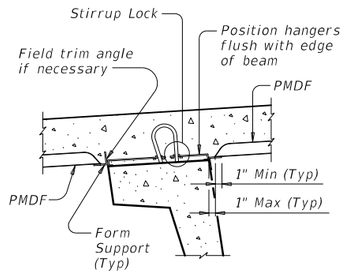

U-BEAMS WITH STIRRUP LOCKS

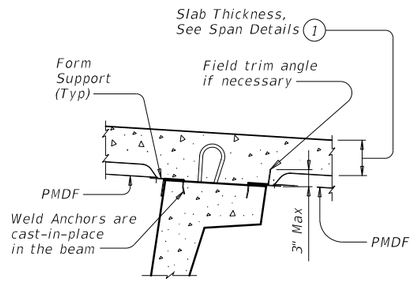

U-BEAMS WITH WELD ANCHORS

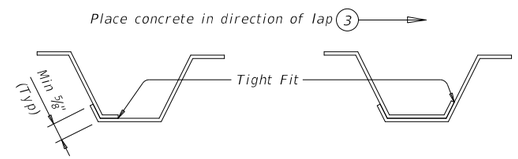

SIDE LAP DETAILS

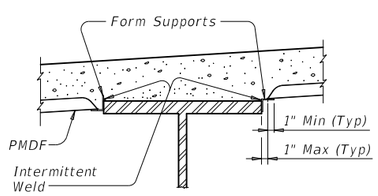

STEEL BEAMS AT COMPRESSION FLANGES

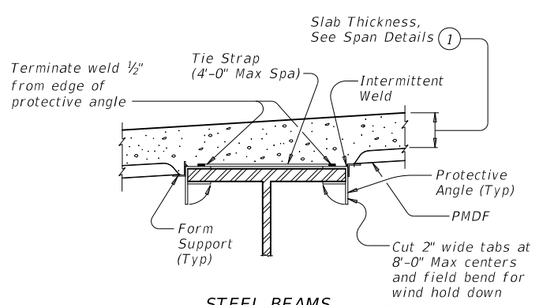

STEEL BEAMS AT TENSION FLANGES (2)

TYPICAL TRANSVERSE SECTIONS

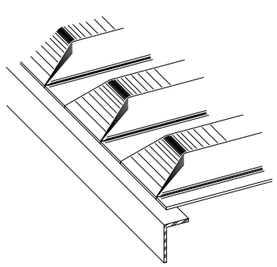

PRECLOSED

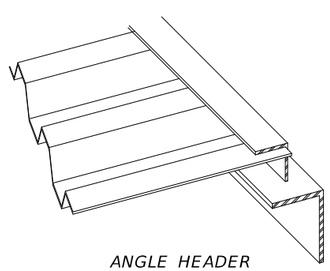

ANGLE HEADER

NOTE: This type is to be used for skewed ends only.

TYPES OF END CLOSURES

(1) Slab thickness minus ⅝" if corrugations match reinforcing bars.

(2) Welding of form supports to tension flanges will not be permitted. Other methods of providing wind hold down resistance for PMDF in tension flange zones will be considered. At least one layer of sheet metal must be provided between the flange and the weld joint.

(3) The direction of concrete placement will be such that the upper layer of the form overlap is loaded first.

(4) See Span details for cover requirements.

GENERAL NOTES:

Steel for Permanent Metal Deck Forms (PMDF) and support angles shall conform to ASTM A653, Structural Steel (SS), with coating designation G165. Steel must have a minimum yield strength of 33 ksi. Minimum thickness of PMDF is 20 gage and that of support angles and protective angles is 12 gage.

Submit two copies of forming plans for PMDF to the Engineer. These plans must show all essential details of proposed form sheets, closures, fasteners, supports, connectors, special conditions and size and location of welds. These plans must clearly show areas of tension flanges for steel beams and provisions for protecting the tension flanges from welding notch effects by inclusion of separating sheet metal or other positive method. These plans must be designed, signed, and sealed by a licensed professional engineer. Department approval of these plans is not required, but the Department reserves the right to require modifications to the plans. The Contractor is responsible for the adequacy of these plans.

The details and notes shown on this standard are to be used as a guide in preparation of the forming plans.

All material, labor, tools and incidentals necessary to form a bridge deck with Permanent Metal Deck Forms is considered subsidiary to Item 422, "Concrete Superstructures".

FOR PRESTR CONC U-BEAM BRIDGES:

Size, spacing, and orientation of bottom mat of slab reinforcement must match the top mat of reinforcing shown on the span details except all bottom mat bars are to be #5.

DESIGN NOTES:

As a minimum, PMDF and support angles must be designed for the dead load of the form, reinforcement and concrete plus 50 psf for construction loads. Flexural stresses due to these design loads must not exceed 75 percent of the yield strength of the steel. Allowable stress for weld metal must be 12,400 psi.

Maximum deflection under the weight of forms, reinforcement and concrete or 120 psf, whichever is greater, shall not exceed the following:

1/180 of the form design span, but not more than 0.50", for design spans of 10' or less.

1/240 of the form design span, but not more than 0.75", for design spans greater than 10'.

The form design span must not be less than the clear distance between beam flanges, measured parallel to the form flutes, minus 2".

CONSTRUCTION NOTES:

Form sheets must not be permitted to rest directly on the top of beam flanges. Form sheets must be securely fastened to form supports and must have a minimum bearing length of one inch at each end. Form supports must be placed in direct contact with beam flanges.

All attachments must be made by permissible welds, screws, bolts, clips or other means shown on the the forming plans. All sheet metal assembly screws must be installed with torque-limiting devices to prevent stripping. Only welds or bolts must be used to support vertical loads.

Welding and welds must be in accordance with the provisions of Item 448, "Structural Field Welding", pertaining to fillet welds. All welds must be made by a qualified welder in accordance with Item 448.

All permanently exposed form metal, where the galvanized coating has been damaged, must be thoroughly cleaned and repaired in accordance with Item 445, "Galvanizing". Minor heat discoloration in areas of welds need not be touched up.

Flutes must line up uniformly across the entire width of the structure where main reinforcing steel is located in the flute.

Construction joints will not be permitted unless shown on the plans. The location of and forming details for any construction joint used must be shown on the forming plans. Forms below a construction joint must be removed after curing of the slab.

A sequence for uniform vibration of concrete must be approved by the Engineer prior to concrete placement. Attention must be given to prevent damage to the forms, yet provide proper vibration to prevent voids or honeycomb in the flutes and at headers and/or construction joints.

Texas Department of Transportation — Bridge Division Standard

PERMANENT METAL DECK FORMS

PMDF

FILE: pmdfste1.dgn	DN: TxDOT	CK: TxDOT	DW: TxDOT	CK: TxDOT
©TxDOT January 2015	CONT	SECT	JOB	HIGHWAY
REVISIONS	0849	01	046	TALLEY ROAD
	DIST		COUNTY	SHEET NO.
			BEXAR	418

DATE:
FILE:

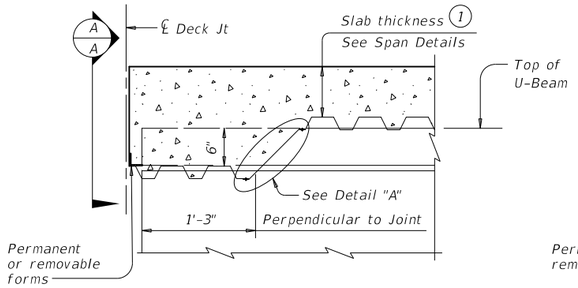

AT THICKENED SLAB END FOR U-BEAMS

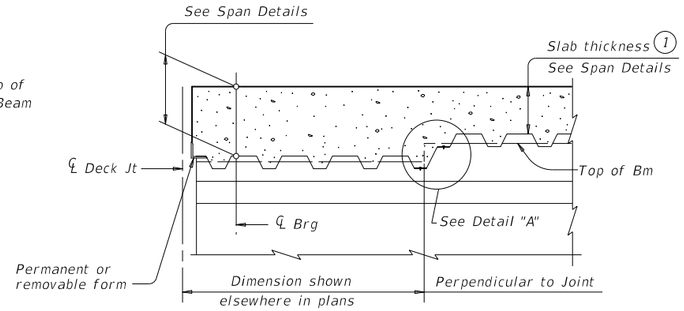

AT THICKENED SLAB END FOR PRESTRESSED I-BEAMS, I-GIRDERS AND STEEL BEAMS

Showing I-Beam block-out. No block-out for I-Girders or Steel Beams.

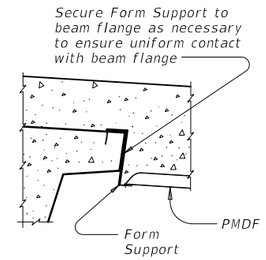

SECTION A-A

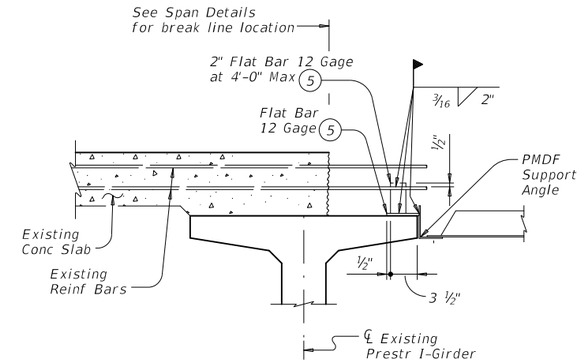

SHOWING PRESTRESSED CONCRETE I-BEAMS, I-GIRDERS AND U-BEAMS

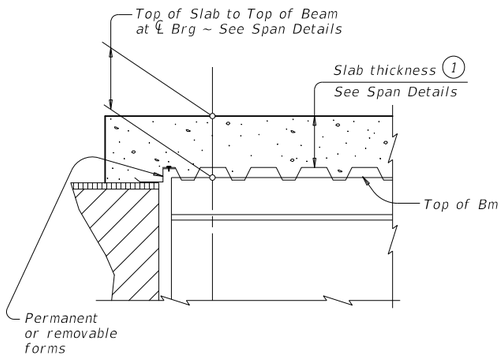

AT SLAB OVER ABUT BKWL OR INV TEE STEM FOR CONC BEAMS WITHOUT THICKENED SLAB END

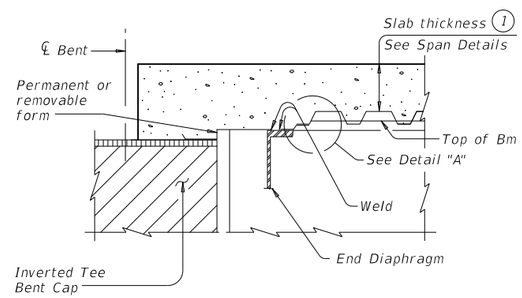

AT SLAB OVER INV TEE STEM FOR STEEL BEAMS WITHOUT THICKENED SLAB END

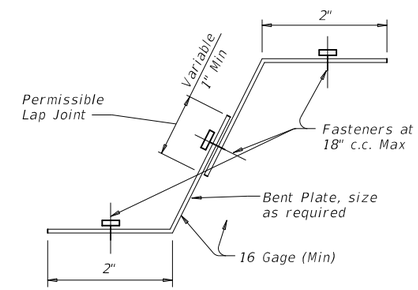

DETAIL "A"

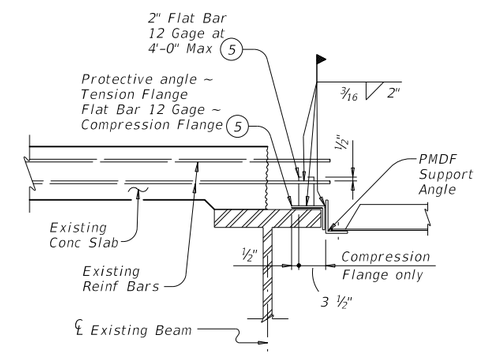

SHOWING STEEL BEAMS

WIDENING DETAILS

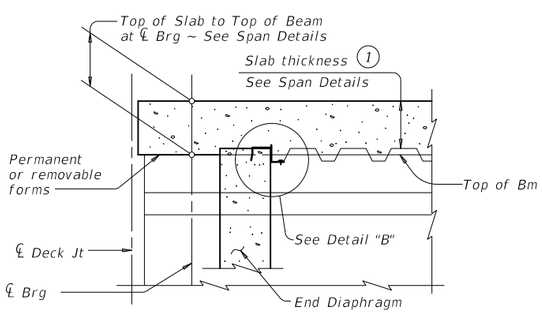

AT CONC END DIAPHRAGM FOR PRESTRESSED I-BEAMS AND STEEL BEAMS

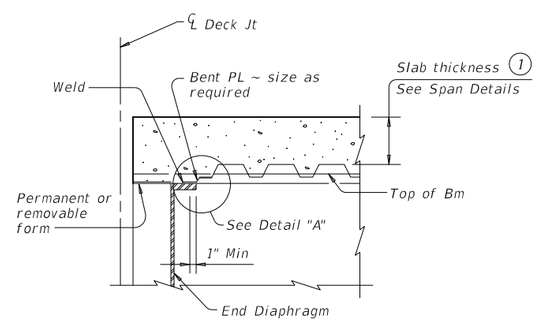

AT END DIAPHRAGM FOR STEEL BEAMS WITHOUT THICKENED SLAB END

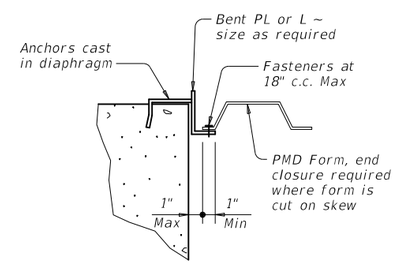

DETAIL "B"

(1) Slab thickness minus 5/8" if corrugations match reinforcing bars

(5) Minimum yield stress of 12 Gage bars shall be 40 ksi

DETAILS AT ENDS OF BEAMS

DISCLAIMER:
The use of this standard is governed by the "Texas Engineering Practice Act". No warranty of any kind is made by TxDOT for any purpose whatsoever. TxDOT assumes no responsibility for the conversion of this standard to other formats or for incorrect results or damages resulting from its use.

DATE:
FILE:

SHEET 2 OF 2

Texas Department of Transportation — Bridge Division Standard

PERMANENT METAL DECK FORMS

PMDF

FILE: pmdfste1.dgn	DN: TxDOT	CK: TxDOT	DW: TxDOT	CK: TxDOT
©TxDOT January 2015	CONT	SECT	JOB	HIGHWAY
REVISIONS	0849	01	046	TALLEY ROAD
	DIST		COUNTY	SHEET NO.
			BEXAR	419

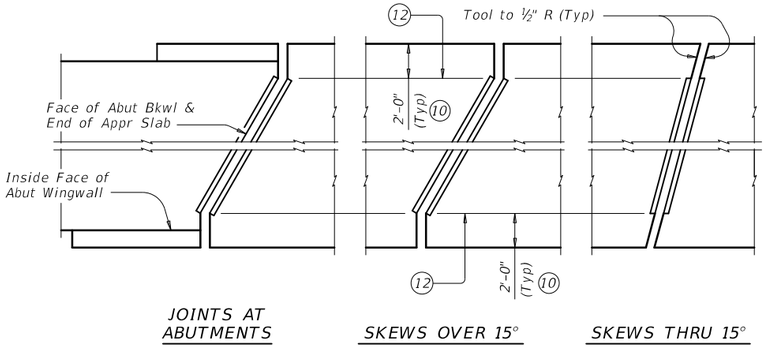

PLANS OF ARMOR PLATES

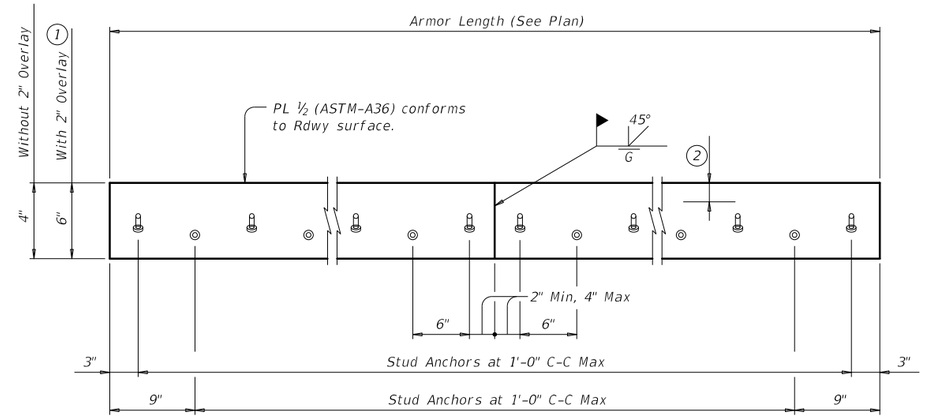

ELEVATION OF BASIC ARMOR PLATE

1. Adjust 6" plate height for overlay thicknesses other than the 2" shown. Adjust values by 1.70 Lbs for each ½" variation in thickness.
2. Do not paint top 1 ½" of plate if using sealed armor joint.
3. Set top of backer rod 1" below top of armor plate. Backer rod must be compatible with joint sealant. Use of multiple pieces to create a backer rod cross section is not permitted. Top of backer rod must be convex as shown.
4. Blast clean entire contact area between sealant and plate (SSPC-SP10) before installing sealant. Light brush blast and thoroughly clean all dust and debris from concrete surfaces in contact with joint sealant before application of silicone seal.
5. Use Class 7 joint sealant that conforms to DMS-6310.
6. Place sealant while ambient temperature is between 55°F and 80°F and is rising.
7. Armor Joint does not include joint sealant or backer rod.
8. Armor Joint (Sealed) includes Class 7 joint sealant and backer rod.
9. Form vertical leg of seal as per the Manufacturer's recommendations. Use Class 4 joint sealant if Class 7 cannot be installed correctly. Install according to Manufacturer's recommendations.
10. Unless shown otherwise, terminate armor plate at slab break point if break is more than 2'-0" from slab edge.
11. See "Plans of Armor Plates".
12. At Fabricator's option, armor plate may extend up to 6" beyond this point for skews through 15°.
13. Align shipping angle perpendicular to joint.

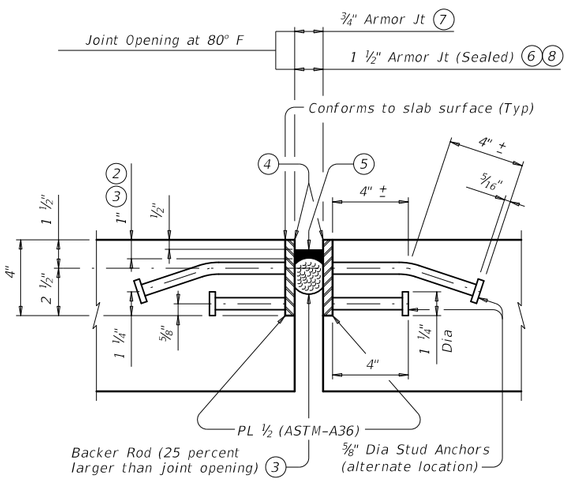

SHOWN WITHOUT 2" OVERLAY AT JOINT LOCATION

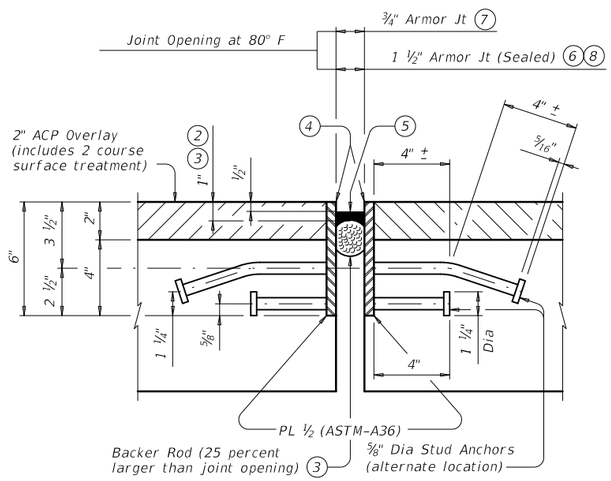

SHOWN WITH 2" OVERLAY AT JOINT LOCATION 1

ARMOR JOINT SECTIONS

Showing Armor Joint (Sealed)

FABRICATION NOTES:

Match mark corresponding plate sections and secure together for shipment with shipping angle. Do not use erection bolts.

Ship armor joints in convenient lengths of 10'-0" Min and 24'-0" Max unless necessary for stage construction or widenings. One shop splice is permitted in each shipping length provided no piece is less than 2'-0" long and sufficient studs are added to limit the stud to shop splice distance to 2" Min and 4" Max.

Weld studs in accordance with AWS D1.1.

Use groove welds for all shop and field butt splices. Grind smooth areas in contact with seal. Make all necessary field splice joint preparations in the shop.

Paint portions of plate not in contact with concrete with the primer specified for System II paint.

Shop drawings for the fabrication of armor joints will not require the Engineer's approval if fabrication is in accordance with the details shown on this standard.

CONSTRUCTION NOTES:

Secure armor joints in position and place to proper grade and alignment by welding braces to adjacent reinforcing steel, to prestressed beam stirrups, or to anchors cast in concrete diaphragms. Include cost of temporary bracing in the price bid for Armor Joint.

Remove shipping angle immediately after each joint half is secured in place. Grind smooth, and touch up with organic zinc-rich paint.

GENERAL NOTES:

Provide armor joints at locations shown on the plans. Provide the seal when "Armor Joint (Sealed)" is noted on the plans.

These joint details accommodate a joint movement range of 1 ⅜" (¾" opening movement and ⅝" closure movement).

Payment for armor joint, with or wthout seal, is based on length of armor plate.

WEIGHTS P.L.F. FOR ONE ARMOR JOINT (2 PLATES)	
WITHOUT OVERLAY	16.10 Lb
WITH 2" OVERLAY 1	22.90 Lb

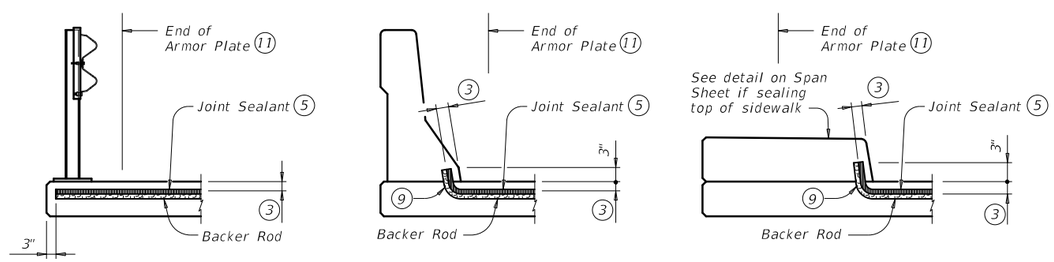

AT STEEL POST BRIDGE RAIL

AT CONCRETE BRIDGE RAIL

AT SIDEWALK

JOINT SEALANT TERMINATION DETAILS

Armor Joint (Sealed) only. Armor Plate is not shown for clarity.

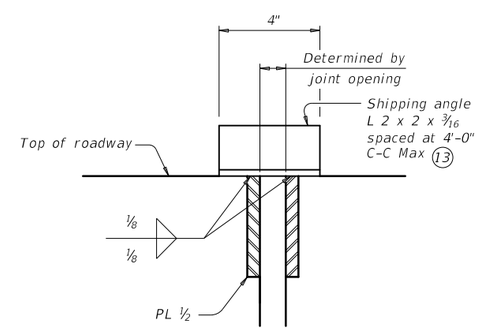

SHOWN WITHOUT 2" OVERLAY AT JOINT LOCATION

With overlay similar

SHIPPING ANGLE

An alternate method of securing joint sections may be used if approved by the Bridge Division. Erection bolts are not allowed.

Texas Department of Transportation

Bridge Division Standard

ARMOR JOINT DETAILS

AJ

FILE: ajstde01.dgn	DN: TxDOT	CK: TxDOT	DW: TxDOT	CK: TxDOT
©TxDOT January 2015	CONT	SECT	JOB	HIGHWAY
REVISIONS	0849	01	046	TALLEY ROAD
	DIST		COUNTY	SHEET NO.
			BEXAR	420

DISCLAIMER:
The use of this standard is governed by the "Texas Engineering Practice Act". No warranty of any kind is made by TxDOT for any purpose whatsoever. TxDOT assumes no responsibility for the conversion of this standard to other formats or for incorrect results or damages resulting from its use.

DATE:
FILE:

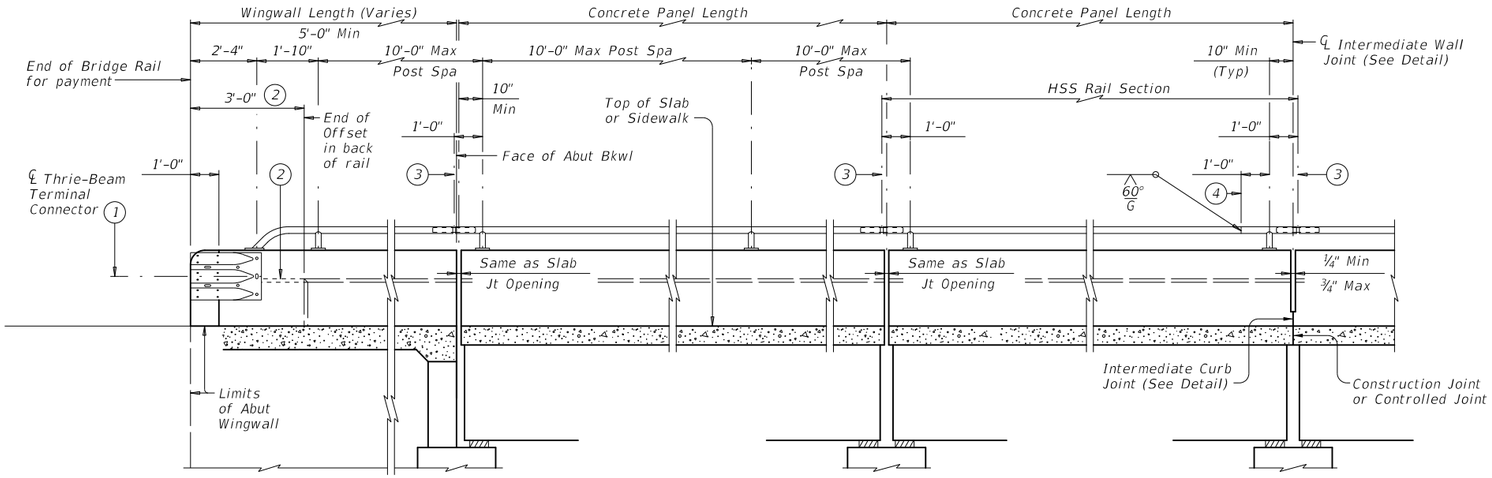

AT ABUTMENTS

AT BENTS WITH SLAB EXP JOINTS

AT BENTS WITHOUT SLAB EXP JOINTS

ROADWAY ELEVATION OF RAIL

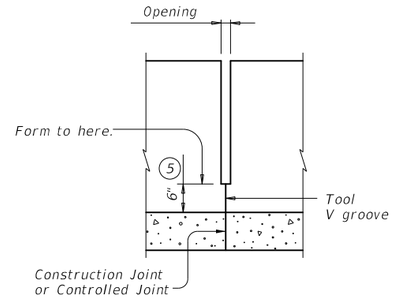

INTERMEDIATE WALL JOINT DETAIL

Provide at all interior bents without slab expansion joints. Location independent of HSS rail splices.

1. Terminal Connectors and associated hardware are to be paid for under the Item "Metal Beam Guard Fence". Attach Metal Beam Guard Fence Transitions to the bridge rail and extend along the embankment unless otherwise shown in the plans.
2. Back of rail offset may, with Engineer's approval, be continued to the end of the railing.
3. ℄ Exp Joint or Splice Joint as required.
4. One shop splice per HSS rail section is permitted with minimum 85 percent penetration. The weld may be square groove, or single vee groove. Grind smooth.
5. Increase 2" for structures with overlay.
6. Provide bolts of sufficient length to extend ½" to ¾" beyond nut.
7. Bolt recesses are only required when pedestrian sidewalks are adjacent to back of rail.
8. Place 4 additional Bars R(#4) 3'-8" in length inside Bars S(#4) and centered 2'-0" from end of rail when Terminal Connections are required. Field bend as needed.
9. HSS 2.875 x 0.203
10. HSS 2.375 x 0.154
11. ⅜" Dia Hole in bottom of HSS rail (Minimum 1 hole between posts ~ Typ)

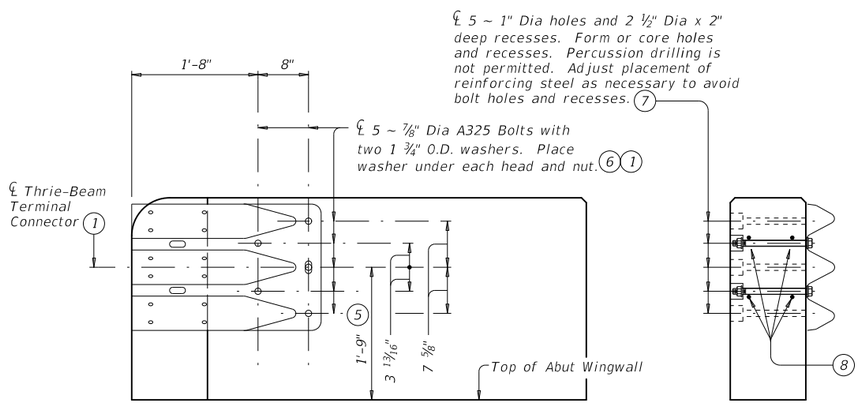

ELEVATION

SECTION

TERMINAL CONNECTION DETAILS

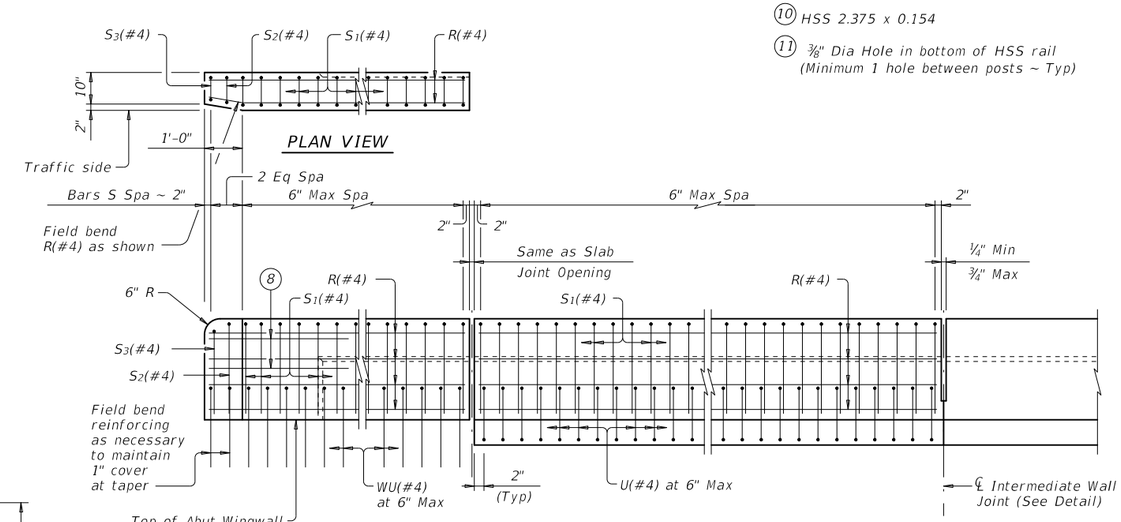

AT ABUT WINGWALL

AT BENTS WITH SLAB EXP JOINTS

AT SLAB

AT BENTS WITHOUT SLAB EXP JOINTS

ELEVATION SHOWING TYPICAL REINFORCING PLACEMENT

(Showing without raised sidewalk)

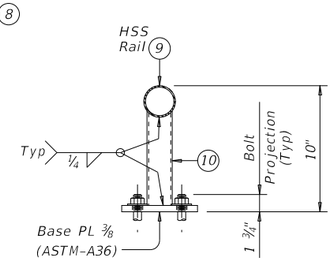

TRANSVERSE SECTION

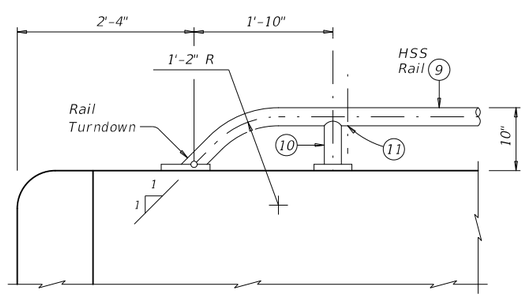

Note that at least two anchor points (as shown) are required for the Bridge Rail on the Abutment Wingwall. Longer Wingwalls may require more than two Rail anchorages.

HSS RAIL TERMINAL DETAIL

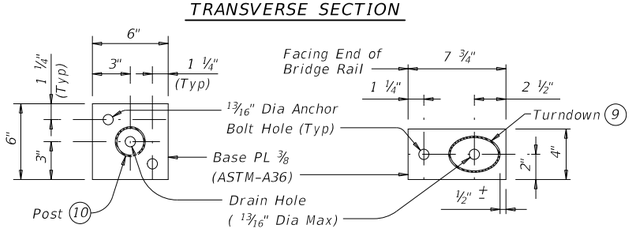

POST BASE PLATE PLAN

RAIL TURNDOWN BASE PLATE PLAN

HSS RAIL DETAILS

SHEET 1 OF 3

Texas Department of Transportation

Bridge Division Standard

COMBINATION RAIL

TYPE C221

FILE: rlstd018.dgn	DN: TxDOT	CK: TxDOT	DW: JTR	CK: JMH
©TxDOT July 2014	CONT	SECT	JOB	HIGHWAY
REVISIONS 03-16: Removed shop drawing note. Added MASH TL-3 in General Notes. Added additional epoxy classes.	0849	01	046	TALLEY ROAD
	DIST		COUNTY	SHEET NO.
			BEXAR	421

DISCLAIMER:
The use of this standard is governed by the "Texas Engineering Practice Act". No warranty of any kind is made by TxDOT for any purpose whatsoever. TxDOT assumes no responsibility for the conversion of this standard to other formats or for incorrect results or damages resulting from its use.

DATE:
FILE:

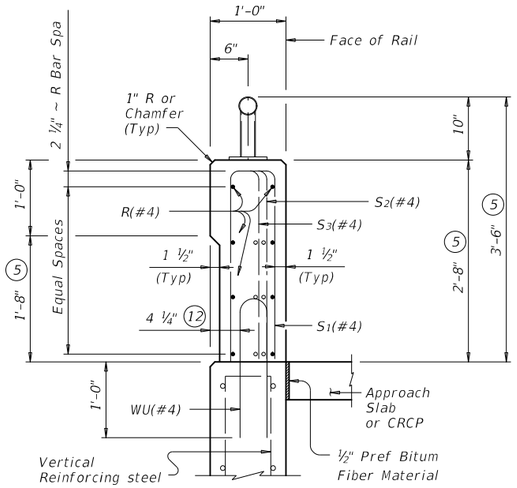

ON ABUTMENT WINGWALLS OR CIP RETAINING WALLS

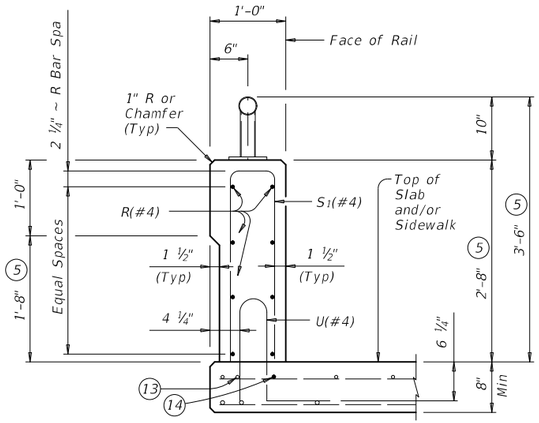

ON BRIDGE SLAB

SECTIONS THRU RAIL WITHOUT RAISED SIDEWALK

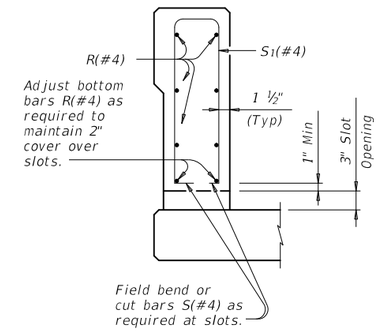

SECTION THRU OPTIONAL SIDE SLOT DRAIN

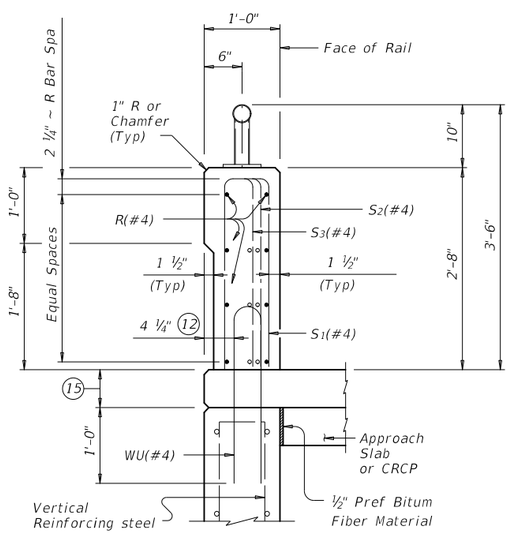

ON ABUTMENT WINGWALLS OR CIP RETAINING WALLS

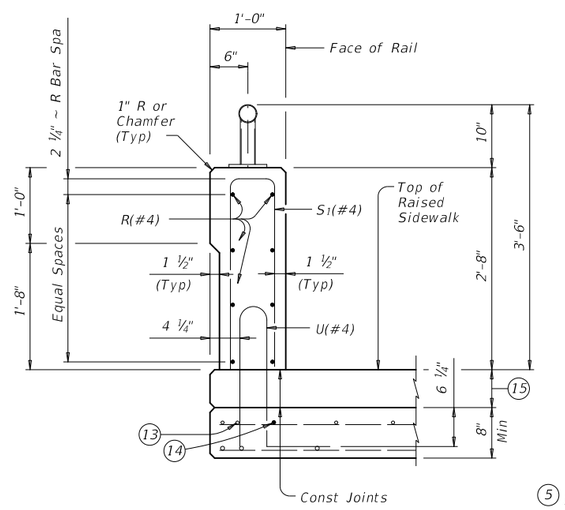

ON BRIDGE SLAB

SECTIONS THRU RAIL WITH RAISED SIDEWALK

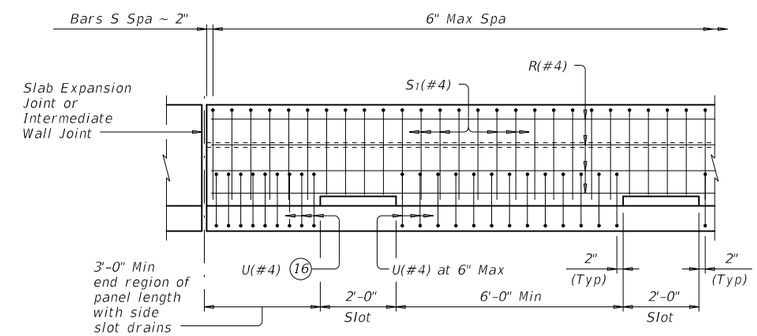

OPTIONAL SIDE SLOT DRAIN DETAIL

Note: Side Slot Drains may be used where shown elsewhere on the plans or as directed by the Engineer. Drains should not be placed over railroad tracks, lower roadways, or sidewalks. When this rail is used as a separator between a roadway surface and a sidewalk surface, side drain slots will not be permitted.

(5) Increase 2" for structures with overlay.

(12) 5 ¼" when vertical reinforcing has closer clear cover over horizontal reinforcing in abutment wingwalls or retaining walls on traffic side of wall.

(13) As an aid in supporting reinforcement, additional longitudinal bars may be used in the slab with the approval of the Engineer. Such bars must be furnished at the Contractors expense.

(14) Top longitudinal slab bar may be adjusted laterally 3" plus or minus to tie reinforcing.

(15) Raised Sidewalk

(16) Space U(#4) bars at 4" Max when end region of panel length is less than 6'-0" to side slot drain. Space U(#4) bars at 6" Max when end region of panel length is 6'-0" and greater to side slot drain.

DISCLAIMER:
The use of this standard is governed by the "Texas Engineering Practice Act". No warranty of any kind is made by TxDOT for any purpose whatsoever. TxDOT assumes no responsibility for the conversion of this standard to other formats or for incorrect results or damages resulting from its use.

DATE:
FILE:

Texas Department of Transportation — Bridge Division Standard

COMBINATION RAIL

TYPE C221

FILE: rlstd018.dgn	DN: TxDOT	CK: TxDOT	DW: JTR	CK: JMH
©TxDOT July 2014	CONT	SECT	JOB	HIGHWAY
REVISIONS 03-16: Removed shop drawing note. Added MASH TL-3 in General Notes. Added additional epoxy classes.	0849	01	046	TALLEY ROAD
	DIST		COUNTY	SHEET NO.
			BEXAR	422

RAIL DATA FOR HORIZONTAL CURVES

	RADIUS TO FACE OF RAIL	MAX CHORD LENGTH	CONSTRUCT OR FABRICATE
HSS Rail	Over 2800'	29'-0"	Straight rail panels
	Over 1400' thru 2800'	14'-6"	To required radius or to chords shown
	Over 700' thru 1400'	7'-3"	
	Thru 700'	Zero	To required radius

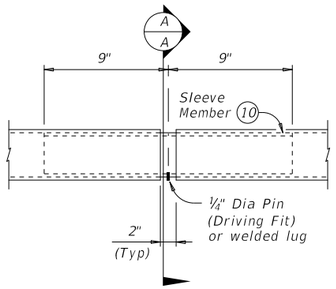

AT SPLICE OR EXP JTS

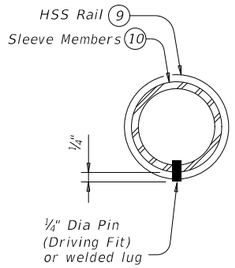

SECTION A-A

PIPE SPLICE DETAILS

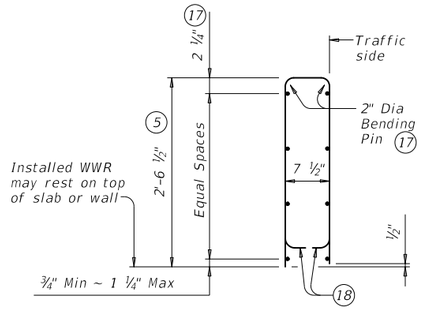

OPTIONAL WELDED WIRE REINFORCEMENT (WWR)

DESCRIPTION	LONGITUDINAL WIRES	VERTICAL WIRES
Minimum (Cumulative Total) Wire Area	1.067 Sq In.	0.267 Sq In. per Ft
	No. of Wires	Spacing
Minimum	8	4"
Maximum	10	8"
Maximum Wire Size Differential	The smaller wire must have an area of 40% or more of the larger wire.	

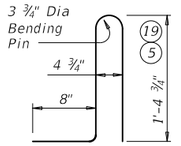

BARS U (#4)

BARS WU (#4)

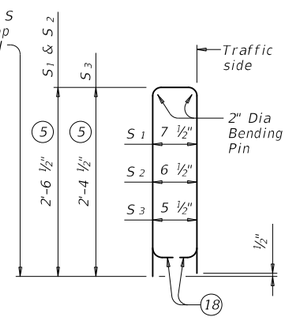

BARS S (#4)

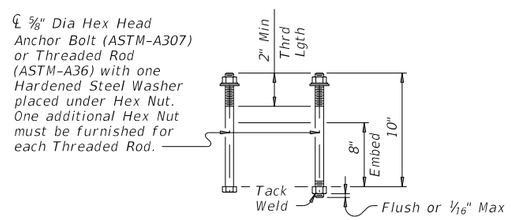

CAST-IN-PLACE ANCHOR BOLT OPTIONS (20)

(5) Increase 2" for structures with overlay.

(9) HSS 2.875 x 0.203

(10) HSS 2.375 x 0.154

(17) No longitudinal wires may be in top center of cage.

(18) Bend or cut as required to clear drain slots.

(19) For raised sidewalks, add sidewalk height to total bar height. Use sidewalk height at rail's location.

(20) See "Material Notes" for anchor bolt information.

CONSTRUCTION NOTES:

This railing may be constructed with slip-forms when approved by the Engineer, with equipment approved by the Engineer and when epoxy adhesive anchor bolts are used. Slip-forming parapet is not allowed if anchor bolts are cast with parapet wall. Provide sensor control for both line and grade. Tack welding to provide bracing for slip-form operations is acceptable. Welding can be performed at a minimum spacing of 3 ft between the cage and the anchorage. It is permissible to weld to U, WU and S bars at any location on the cage. If increased bracing is needed, additional anchorage devices must be added and welding must be performed in the upper two thirds of the cage.

Face of rail, parapet must be plumb unless otherwise approved by the Engineer. HSS rail posts must be square to the top of parapet. Use epoxy mortar under post base plates if gaps larger than 1/16" exist.

Round or chamfer exposed edges of HSS rail and HSS rail posts to approximately 1/16" by grinding.

At the contractor's option anchor bolts may be cast with the parapet (See Cast-in-Place Anchor Bolt Options).

HSS rail sections must not include less than two posts, and no more than four (except at Abutments).

Chamfer all parapet exposed corners.

MATERIAL NOTES:

Galvanize all steel components except reinforcing steel unless otherwise shown on plans.

Provide Class "C" concrete. Povide Class "C" (HPC) if required elsewhere.

Provide Grade 60 reinforcing steel.

Epoxy coat all rail reinforcement if slab bars are epoxy coated.

Deformed Welded Wire Reinforcement (WWR) (ASTM A1064) of equal size and spacing may be substituted for Bars U and WU unless noted otherwise. Deformed WWR (ASTM 1064) may be substituted for Bars R and S, as shown. Combinations of reinforcing steel and WWR or configurations of WWR other that shown are permitted if conditions in the table are satisfied. Provide the same laps as required for reinforcing bars.

Provide ASTM-A1085 or A500 Grade B or A53 Grade B for all HSS.

Anchor bolts must be ⅝" Dia ASTM A36 fully threaded rods with one hex nut and one hardened steel washer at each bolt. Embed threaded rods into parapet wall with a Type III, Class C, D, E, or F epoxy anchorage system. Minimum embedment depth is 3". Anchorage system chosen must be able to achieve an ultimate tensile resistance of 8.4 kips per bolt. The Contractor must provide evidence to the Engineer that this can be achieved. Evidence of adequate tensile resistance can be based on the manufacturer's published values of ultimate tensile strength (anchor spacing and edge distance must be accounted for). Anchor installation, including hole size, drilling, and clean-out, must be in accordance with the manufacturer's instructions.

Optional cast-in-place anchor bolts must be ⅝" Dia ASTM A307 Grade A bolts (or A36 threaded rods with one tack welded hex nut each) with one hex nut and one hardened steel washer at each bolt.

Provide bar laps, where required, as follows:

Uncoated ~ #4 = 1'-5"
Epoxy coated ~ #4 = 2'-1"

GENERAL NOTES:

This rail has been evaluated and accepted to be of equal strength to railings with like geometry, which have been crash tested to meet MASH TL-3 criteria. This rail can be used for speeds of 50 mph and greater when a TL-3 rated guard fence transition is used. When a TL-2 rated guard fence transition is used, this rail can only be used for speeds of 45 mph and less.

Do not use this railing on bridges with expansion joints providing more than 5" movement.

Rail anchorage details shown on this standard may require modification for select structure types. See appropriate details elsewhere in plans for these modifications.

Submit erection drawings showing panel lengths, rail post spacing, and anchor bolt setting to the Engineer for approval.

Average weight of railing with no overlay: 380 plf (total)
370 plf (Conc)
10 plf (Steel)

Cover dimensions are clear dimensions, unless noted otherwise.
Reinforcing bar dimensions shown are out-to-out of bar.

DISCLAIMER:
The use of this standard is governed by the "Texas Engineering Practice Act". No warranty of any kind is made by TxDOT for any purpose whatsoever. TxDOT assumes no responsibility for the conversion of this standard to other formats or for incorrect results or damages resulting from its use.

DATE:
FILE:

Texas Department of Transportation — Bridge Division Standard

COMBINATION RAIL

TYPE C221

FILE: rlstd018.dgn	DN: TxDOT	CK: TxDOT	DW: JTR	CK: JMH
©TxDOT July 2014	CONT	SECT	JOB	HIGHWAY
REVISIONS 03-16: Removed shop drawing note. Added MASH TL-3 in General Notes. Added additional epoxy classes.	0849	01	046	TALLEY ROAD
	DIST		COUNTY	SHEET NO.
			BEXAR	423

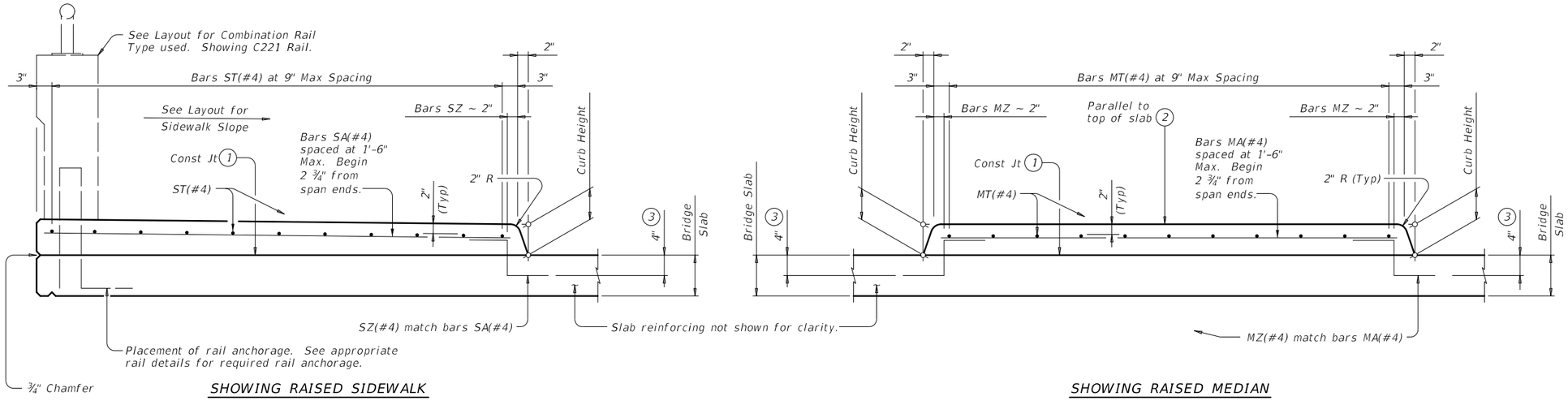

TYPICAL TRANSVERSE SECTIONS

See Span Details for dimensions not shown.

(1) Provide broom finish to top of bridge slab where raised sidewalk or raised median area is defined.

(2) Unless noted otherwise on the span details.

(3) Bars may rest on top of PCPs.

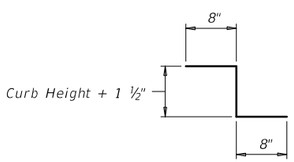

BARS SZ(#4) AND MZ(#4)

APPROVED SLIP RESISTANT PLATE	
Product	Manufacturer Website
Mebac® #3, Steel	www.harscoikg.com
Algrip™, Steel	www.algrip.com
SlipNOT® Grade 2, Steel	www.slipnot.com

Drain cover plates must be fabricated with a product from this list. No exceptions are permitted.

MATERIAL NOTES:

Provide the same concrete required for the bridge deck, Class S or Class S (HPC).

Provide Grade 60 reinforcement. Welded wire reinforcement (WWR) meeting ASTM A1064 of equivalent size and spacing may be substituted for bars SA, ST, MA, and MT.

Epoxy coat reinforcement if bridge deck reinforcement is required to be epoxy coated.

Hot-dip galvanize slip resistant steel plate after fabrication in accordance with Item 445, "Galvanizing". Chamfer or round edges approximately 1/16" prior to galvanizing.

GENERAL NOTES:

Designed according to AASHTO LRFD Specifications.

Provide the following bar or wire lap lengths when required:
- Uncoated, 1'-5" Min
- Coated, 2'-1" Min

Submittal and approval of drain cover plate shop drawings is not required if fabrication is accordance with these details.

Raised sidewalks will be paid under Item 422 by the SF of Bridge Sidewalk or Bridge Sidewalk (HPC). Raised medians will be paid under Item 422 by the SF of Bridge Median or Bridge Median (HPC).

Payment for drain cover plates will be by the pound of "Structural Steel (Misc Non-Bridge)" as per Item 442, "Metal for Structures". Weight of one drain cover plate is 48 plf.

DESIGNER NOTES:

These details do not apply for longitudinal grades exceeding 5 percent.

Cover dimensions are clear dimensions, unless noted otherwise.

Reinforcing bar dimensions shown are out-to-out of bar.

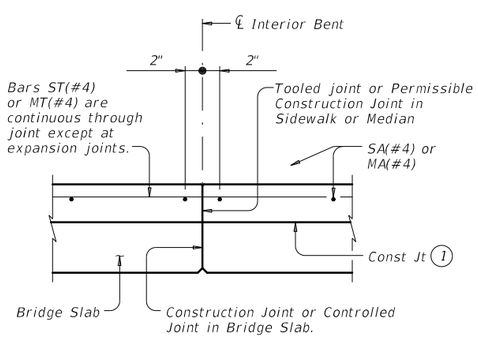

LONGITUDINAL SECTION AT INTERIOR BENT

At Bents with expansion joints, provide an open joint in the sidewalk/median matching the deck's joint width.

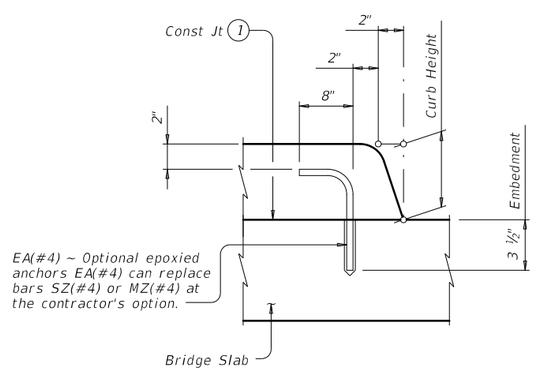

OPTIONAL EPOXY ANCHORS

Embed EA(#4) bar into concrete with a Type III (Class C) epoxy meeting the requirements of DMS-6100, "Epoxies and Adhesives". Follow manufacturer's directions for installing the epoxied anchor bars.

SHEET 1 OF 2

Texas Department of Transportation — Bridge Division Standard

BRIDGE RAISED SIDEWALK AND MEDIAN DETAILS

BRSM

FILE: brsmste1.dgn	DN: JMH	CK: TxDOT	DW: JTR	CK: TxDOT
©TxDOT January 2015	CONT	SECT	JOB	HIGHWAY
REVISIONS	0849	01	046	TALLEY ROAD
	DIST		COUNTY	SHEET NO.
			BEXAR	424

DISCLAIMER:
The use of this standard is governed by the "Texas Engineering Practice Act". No warranty of any kind is made by TxDOT for any purpose whatsoever. TxDOT assumes no responsibility for the conversion of this standard to other formats or for incorrect results or damages resulting from its use.

DATE:
FILE:

DISCLAIMER:
The use of this standard is governed by the "Texas Engineering Practice Act". No warranty of any kind is made by TxDOT for any purpose whatsoever. TxDOT assumes no responsibility for the conversion of this standard to other formats or for incorrect results or damages resulting from its use.

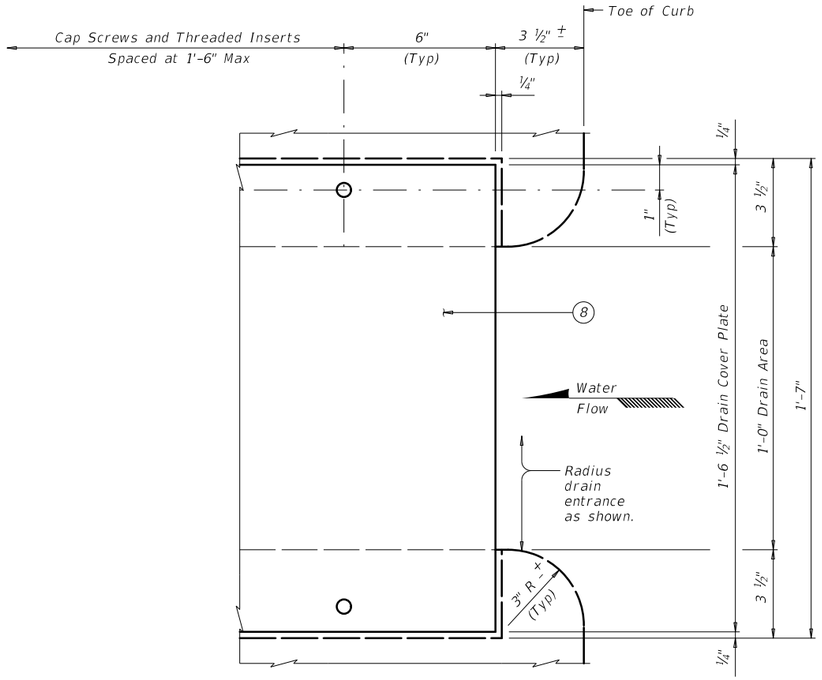

PARTIAL PLAN CURB DRAIN

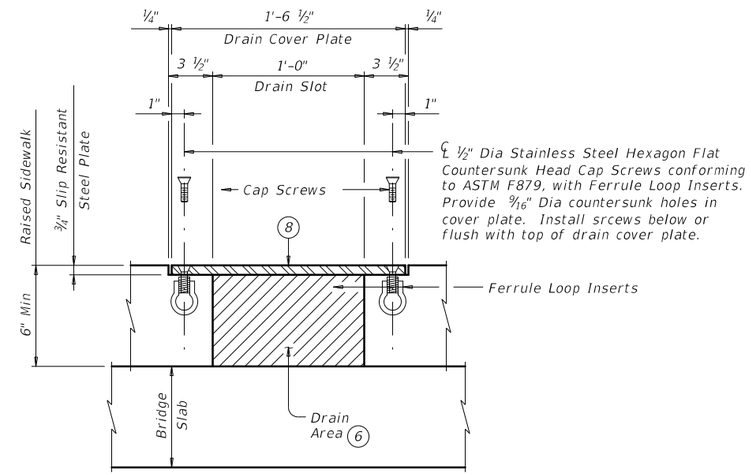

SECTION B-B

Reinforcing not shown for clarity.

1. Provide broom finish to top of bridge slab where raised sidewalk or raised median area is defined.
4. 3'-0" Min at Deck Expansion Joints, Deck Construction Joints or Controlled Joints, Rail Intermediate Wall Joints or from face of substructure.
5. For rail Type C1W, center drain slots between posts.
6. Steel trowel top surface of bridge deck in drain locations.
7. Provide sidewalk drains where shown elsewhere on the plans or as directed by the Engineer. Do not place drains over railroad tracks, lower roadways, or sidewalks. Place Drain and Cover Plate perpendicular to toe of rail.
8. Drain Cover Plate (PL ¾ x 18 ½ Slip Resistant Steel Plate). Install flush with top of sidewalk.

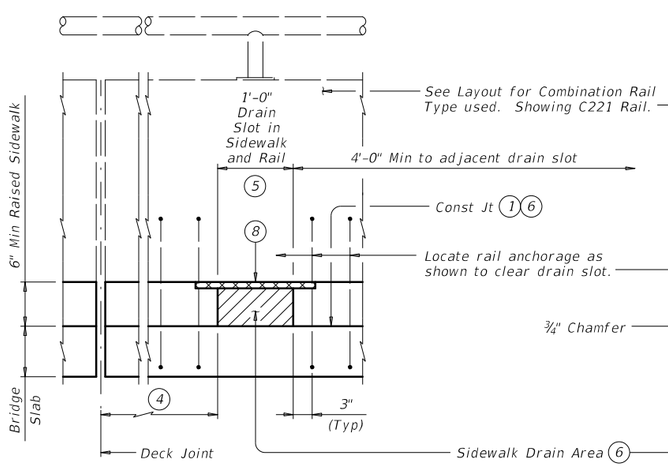

SECTION A-A

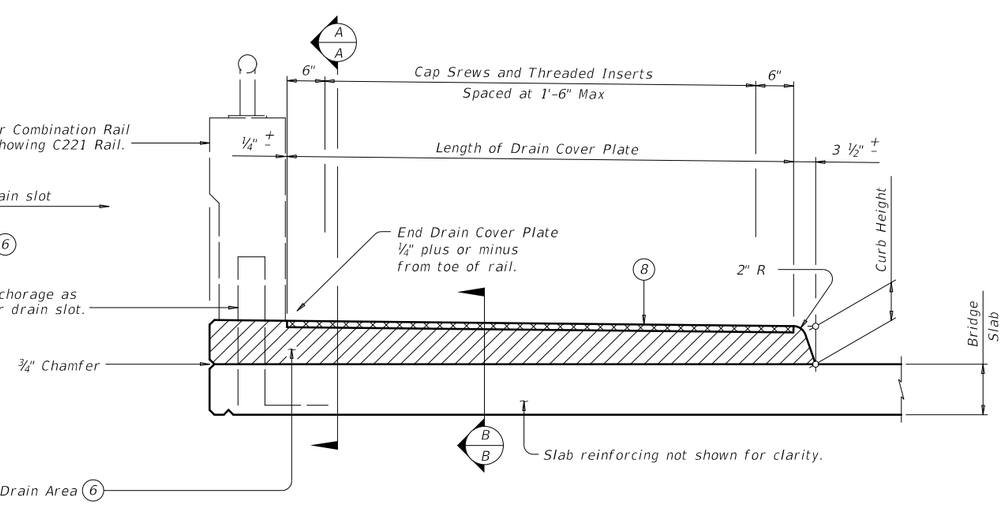

SHOWING RAISED SIDEWALK WITH DRAIN SLOT

OPTIONAL DRAIN DETAILS 7

SHEET 2 OF 2

Texas Department of Transportation — Bridge Division Standard

BRIDGE RAISED SIDEWALK AND MEDIAN DETAILS

BRSM

FILE: brsmstel.dgn	DN: JMH	CK: TxDOT	DW: JTR	CK: TxDOT	
©TxDOT January 2015	CONT	SECT	JOB	HIGHWAY	
REVISIONS	0849	01	046	TALLEY ROAD	
	DIST		COUNTY		SHEET NO.
			BEXAR		425

DATE:
FILE:

DISCLAIMER:
The use of this standard is governed by the "Texas Engineering Practice Act". No warranty of any kind is made by TxDOT for any purpose whatsoever. TxDOT assumes no responsibility for the conversion of this standard to other formats or for incorrect results or damages resulting from its use.

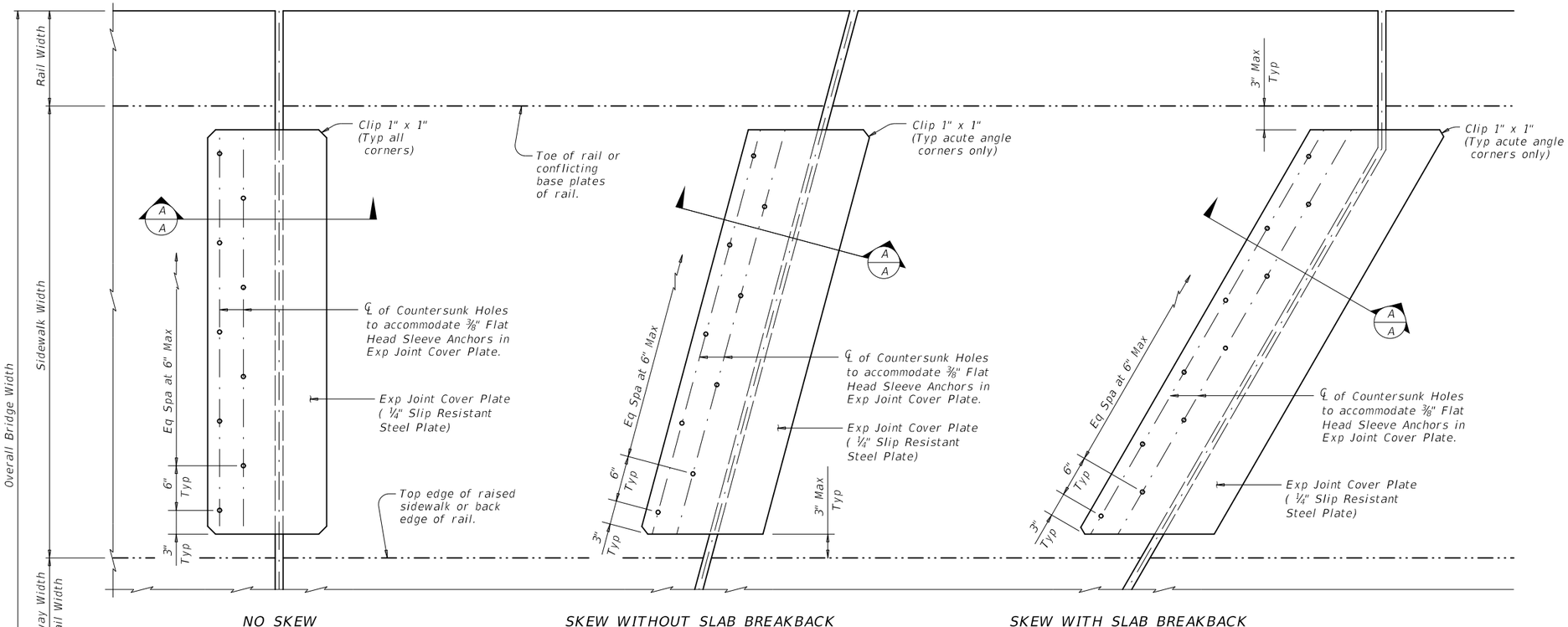

NO SKEW

SKEW WITHOUT SLAB BREAKBACK

SKEW WITH SLAB BREAKBACK

PLAN

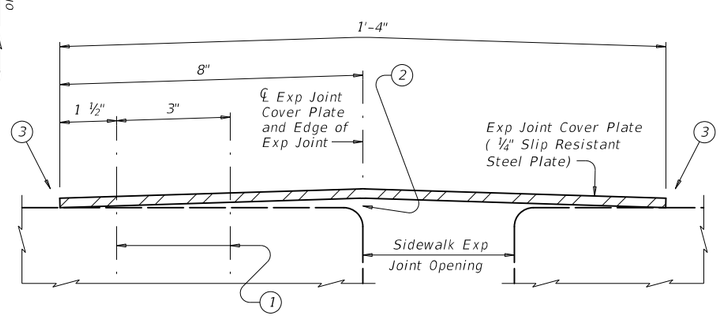

SHOWING LEVEL EXP JOINT

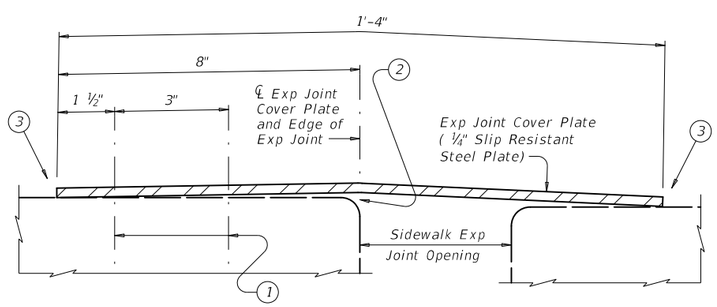

SHOWING UNLEVEL EXP JOINT

(Install Sleeve Anchors on high side of Exp Joint)

SECTION A-A

1. ℄ ⅜" x 2 ½" Min, Flat Head Sleeve Anchors, Stainless Steel. Countersink Flat Head Sleeve Anchors in ¼" Slip Resistant Steel Plate.
2. It is not necessary to remove plate crown provided the plate is firmly secured to the sidewalk.
3. Transverse edges must be in contact with sidewalk surface after installation.

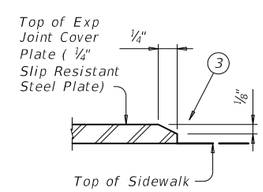

EXP JOINT COVER PLATE BEVEL DETAIL

Bevel all plate edges as shown.

APPROVED SLIP RESISTANT PLATE	
Product	Manufacturer Website
Mebac® #3, Steel	www.harscoikg.com
Algrip™, Steel	www.algrip.com
SlipNOT® Grade 2, Steel	www.slipnot.com

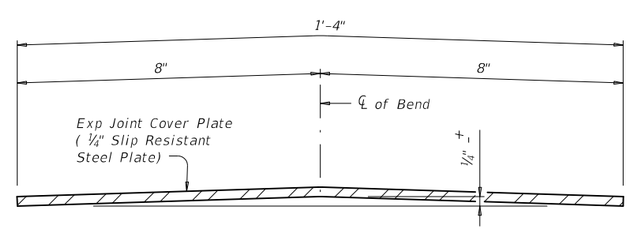

BENDING DIAGRAM OF EXP JOINT COVER PLATE

FABRICATION NOTES:

Shop drawings for the fabrication of Sidewalk Expansion Joint Cover Plate will not require the Engineer's approval if fabrication is in accordance with the details shown on this standard.

A Bridge Sidewalk Expansion Joint Cover Plate Layout which identifies location side of sleeve anchors and orientation of all cover plate sections must be developed by the fabricator. Mark each steel section in accordance with the Bridge Sidewalk Expansion Joint Cover Plate Layout. A copy of the Bridge Sidewalk Expansion Joint Cover Plate Layout is to be provided to the Engineer.

Sidewalk expansion joint cover plates must be hot-dipped galvanized ¼" slip resistant steel plate. Checker plate or diamond plate is not allowed nor are slip resistant tapes, films and non-metallic coatings.

Minimum required yield strength of steel plate is 36 ksi.

Hot-dip galvanize slip resistant steel plate after fabrication in accordance with Item 445, "Galvanizing".

Provide stainless steel flat head sleeve anchors meeting the requirements of ASTM F 593, Group 1, Alloy 304. Countersink holes in slip-resistant plate for sleeve anchors. Drill holes in sidewalk as per sleeve anchor manufacturer's recommendations. Install sleeve anchors flush with, or slightly recessed below, top surface of sidewalk expansion joint cover plate.

GENERAL NOTES:

Sidewalk expansion joint cover plates can only accommodate up to a 7" maximum expansion joint.

Details provided are applicable to concrete walkway surfaces only.

Payment for sidewalk expansion joint cover plates must be by the pound of "Structural Steel (Misc Non-Bridge)" as per Item 442, "Metal for Structures".

Estimated weight of one sidewalk expansion joint cover plate is 14 plf.

Texas Department of Transportation — Bridge Division Standard

BRIDGE SIDEWALK EXPANSION JOINT COVER PLATE (ALL SKEWS)

BS-EJCP

FILE: bsejste1.dgn	DN: TxDOT	CK: TxDOT	DW: TxDOT	CK: TxDOT
©TxDOT January 2015	CONT	SECT	JOB	HIGHWAY
REVISIONS	0849	01	046	TALLEY ROAD
	DIST		COUNTY	SHEET NO.
			BEXAR	426

DATE:
FILE:

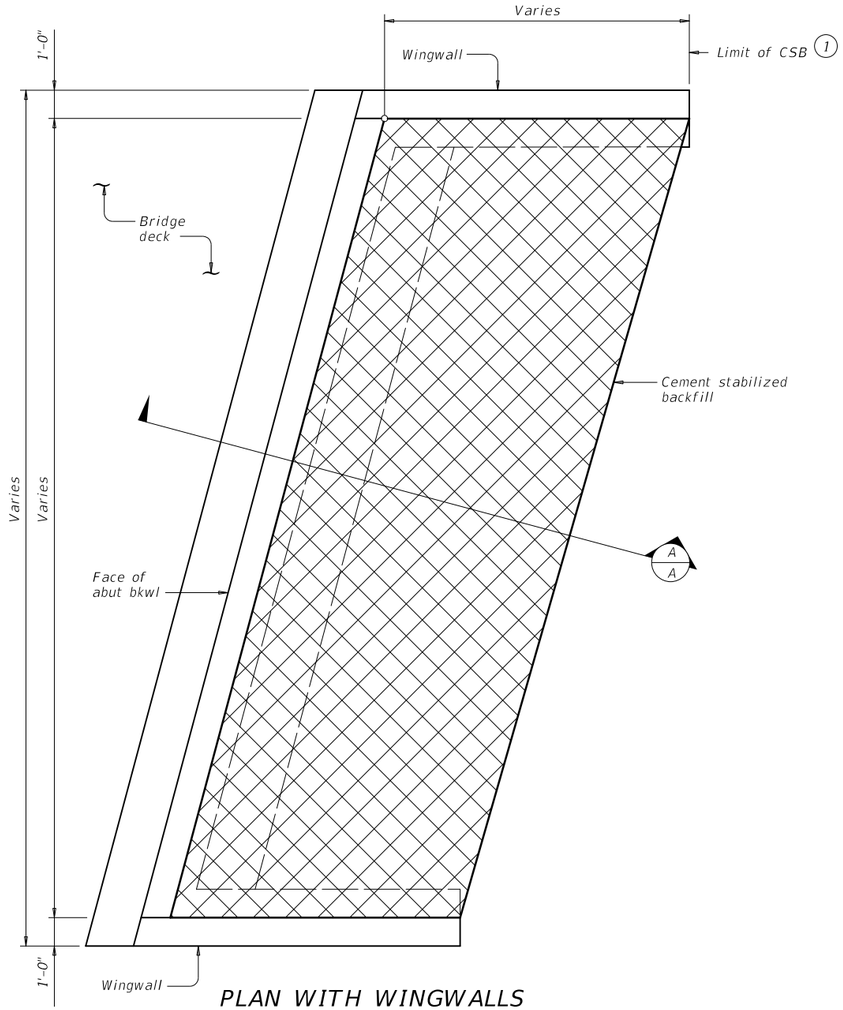

PLAN WITH WINGWALLS

Cast-in-place retaining walls similar.

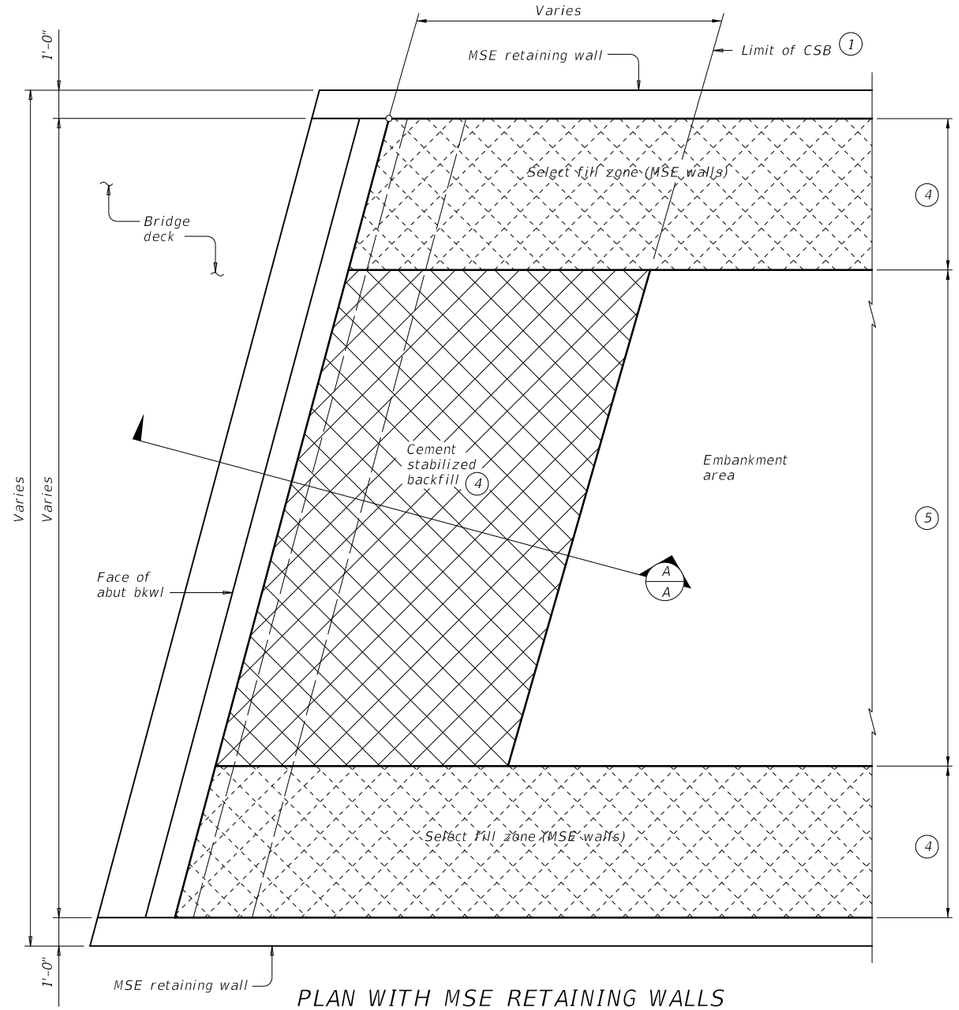

PLAN WITH MSE RETAINING WALLS

(1) Usual limit of Cement Stabilized Backfill is at end of wingwall. Extend CSB limits as required to maintain a slope no steeper than 1:1 at bottom of backfill.

(2) Bench backfill as shown with 12" (approximate) bench depths.

(3) Other materials can be used as a bond breaker if permitted by the Engineer. 2 layers of 30 Lb roofing felt or 2 layers of heavy mil polyethylene sheeting are examples.

(4) Where MSE retaining walls are present, adjust CSB limits to accommodate the select fill zone. See retaining wall details for additional information.

(5) When distance between select fill zones is less than 5'-0", MSE select fill may be substituted for cement stabilized backfill with approval from the Engineer.

GENERAL NOTES:

Provide Cement Stabilized Backfill (CSB) meeting the requirements of Item 400, "Excavation and Backfill for Structures", to the limits shown at bridge abutments.

Details are drawn showing left forward skew. See Bridge Layout for actual skew direction.

These details do not apply when Concrete Block retaining walls are used in lieu of wingwalls.

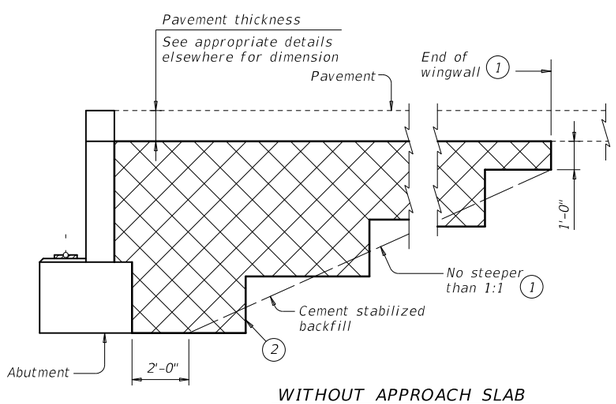

WITHOUT APPROACH SLAB

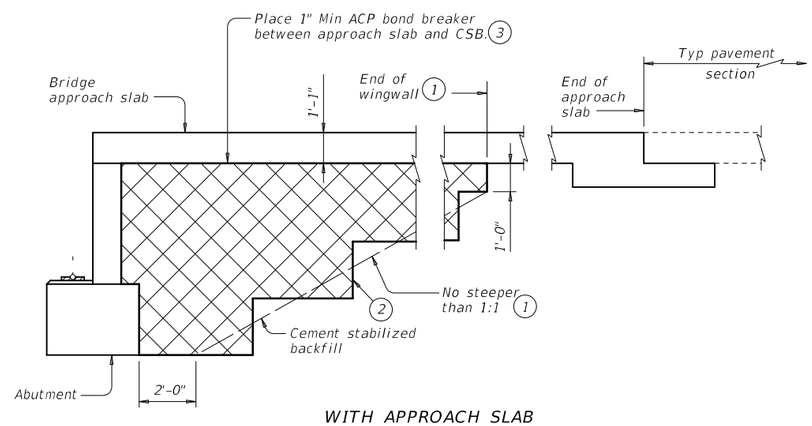

WITH APPROACH SLAB

SECTION A-A

Texas Department of Transportation — Bridge Division Standard

CEMENT STABILIZED ABUTMENT BACKFILL

BRIDGE ABUTMENT

CSAB

FILE: csabste1.dgn	DN: TxDOT	CK: TxDOT	DW: TxDOT	CK: TxDOT
©TxDOT January 2015	CONT	SECT	JOB	HIGHWAY
REVISIONS 01-16: Add MSE wall details.	0849	01	046	TALLEY ROAD
	DIST		COUNTY	SHEET NO.
			BEXAR	427

DISCLAIMER:
The use of this standard is governed by the "Texas Engineering Practice Act". No warranty of any kind is made by TxDOT for any purpose whatsoever. TxDOT assumes no responsibility for the conversion of this standard to other formats or for incorrect results or damages resulting from its use.

DATE:
FILE:

DISCLAIMER:
The use of this standard is governed by the "Texas Engineering Practice Act". No warranty of any kind is made by TxDOT for any purpose whatsoever. TxDOT assumes no responsibility for the conversion of this standard to other formats or for incorrect results or damages resulting from its use.

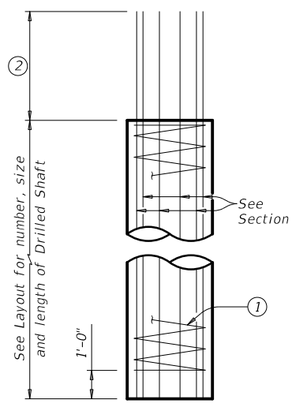

ABUTMENTS, WINGWALLS AND MULTI-DRILLED SHAFT FOOTINGS

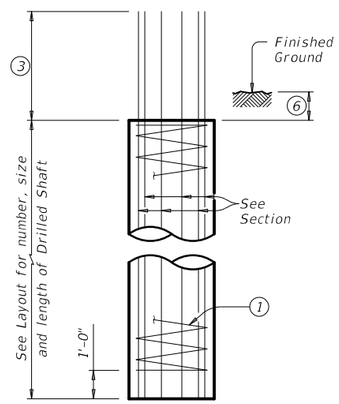

INTERIOR BENTS DRILLED SHAFT DIA EQUAL TO COLUMN DIA

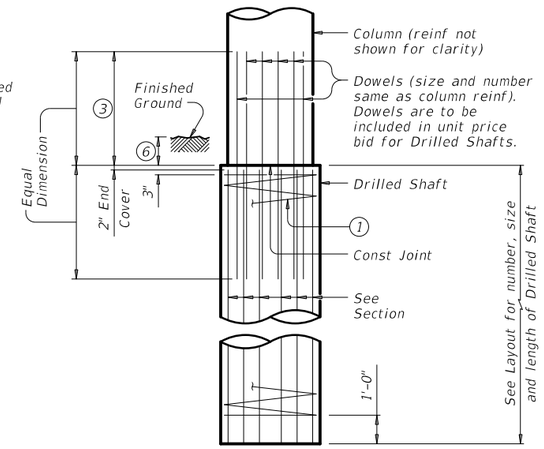

INTERIOR BENTS DRILLED SHAFT DIA GREATER THAN COLUMN DIA

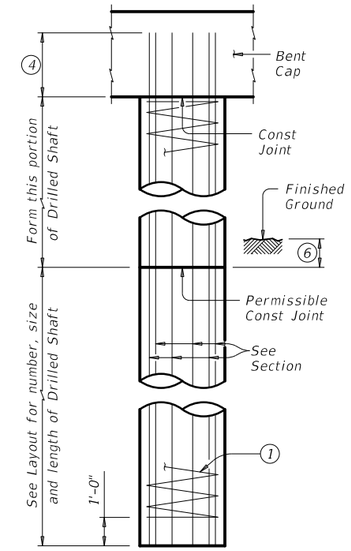

OPTIONAL INTERIOR BENT DRILLED SHAFT DETAIL 5

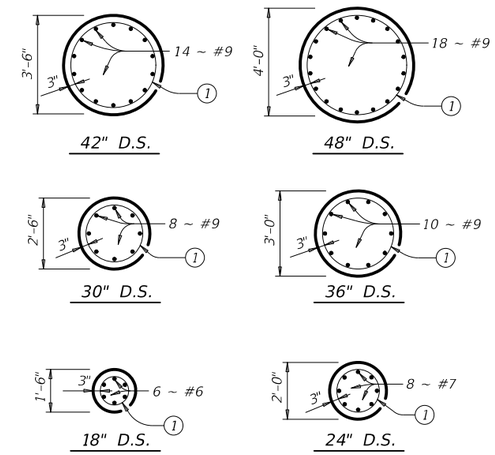

DRILLED SHAFT SECTIONS

DRILLED SHAFT DETAILS

1. #3 Spiral at 6" pitch (One and a half flat turns top & bottom).
2. Min extension into supported element:
   #6 Bars = 1'-6"
   #7 Bars = 1'-8"
   #9 Bars = 2'-3"
3. Min lap with Column reinf:
   #7 Bars = 2'-9"
   #9 Bars = 4'-6"
4. Min extension into supported element:
   #6 Bars = 1'-6"
   #7 Bars = 1'-8"
   #9 Bars = 2'-8"
5. Drilled Shafts may extend to the bottom of bent caps for "H" heights of 6 ft and less (as shown on the Bridge Layout), if approved. This option can only be used when the Drilled Shaft diameter equals the Column diameter. Obtain approval of the forming method above the ground line prior to construction. No adjustments in payment will be made if this option is used.
6. 1'-0" Min
7. Or as shown on plans.

TABLE OF PILE EMBEDMENT

Pile Type	Embedment Depth (Ft)
16" Sq Concrete 18" Sq Concrete HP14 Steel HP16 Steel	1'-0"
20" Sq Concrete 24" Sq Concrete HP18 Steel	1'-6"

See standard CP for additional details on concrete pile embedment.

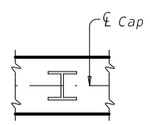

ORIENTATION OF STEEL H-PILING

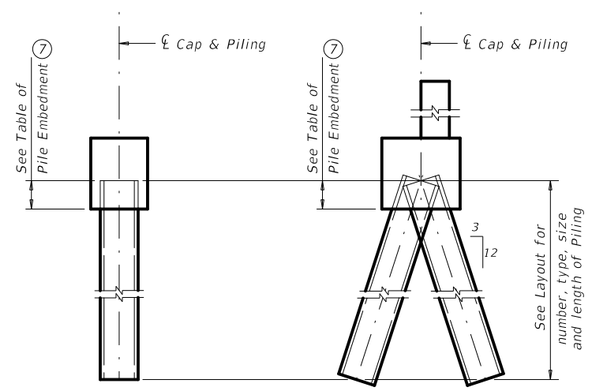

VERTICAL PILE BATTERED PILE

PILING DETAILS

(Concrete or Steel H)

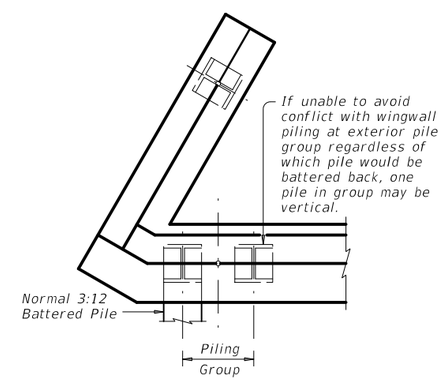

DETAIL "A"

(Showing Plan View of a 30° Skewed Abutment)

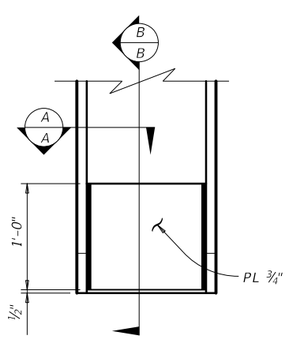

ELEVATION

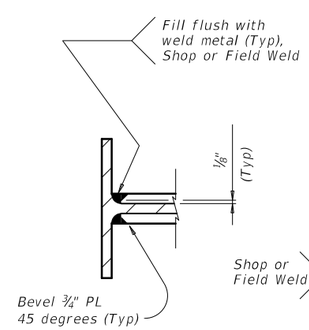

SECTION A-A

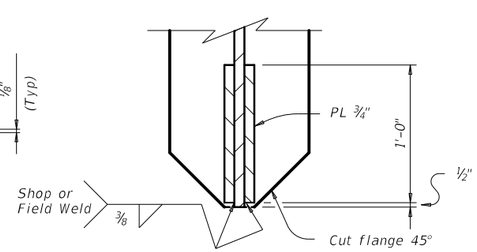

SECTION B-B

STEEL H-PILE TIP REINFORCEMENT

See Item 407 "Steel Piling" to determine when tip reinforcement is required and for options to the details shown.

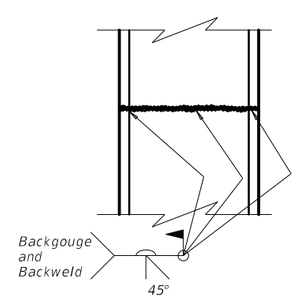

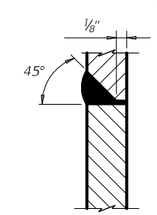

SECTION THRU FLANGE OR WEB

STEEL H-PILE SPLICE DETAIL

Use when required.

SHEET 1 OF 2

Texas Department of Transportation — Bridge Division Standard

COMMON FOUNDATION DETAILS

FD

FILE: fdstde01.dgn	DN: TxDOT	CK: TxDOT	DW: TxDOT	CK: TxDOT
©TxDOT January 2015	CONT	SECT	JOB	HIGHWAY
REVISIONS	0849	01	046	TALLEY ROAD
	DIST		COUNTY	SHEET NO.
			BEXAR	428

DATE:
FILE:

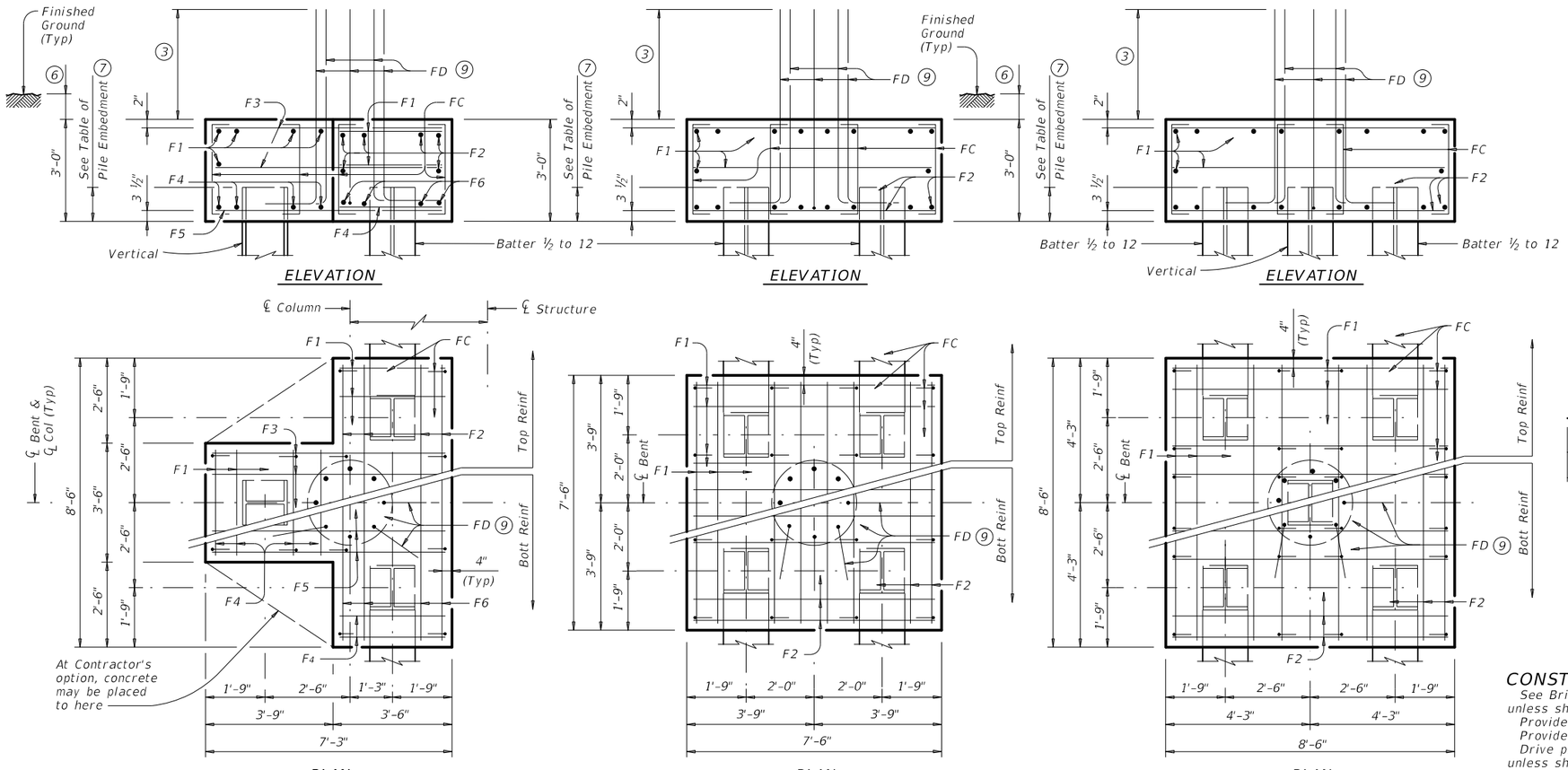

THREE PILE FOOTING (8)

For 36" Dia and smaller columns.

FOUR PILE FOOTING (8)

For 42" Dia and smaller columns.

FIVE PILE FOOTING (8)

For 42" Dia and smaller columns.

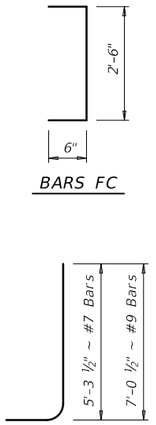

TABLE OF FOOTING QUANTITIES FOR 30" COLUMNS

ONE 3 PILE FOOTING				
Bar	No.	Size	Length	Weight
F1	11	#4	3'- 2"	23
F2	6	#4	8'- 2"	33
F3	6	#4	6'- 11"	28
F4	8	#9	3'- 2"	86
F5	4	#9	6'- 11"	94
F6	4	#9	8'- 2"	111
FC	12	#4	3'- 6"	28
FD (10)	8	#9	8'- 8"	236
Reinforcing Steel			Lb	639
Class "C" Concrete			CY	4.8

ONE 4 PILE FOOTING				
Bar	No.	Size	Length	Weight
F1	20	#4	7'- 2"	96
F2	16	#8	7'- 2"	306
FC	16	#4	3'- 6"	37
FD (11)	8	#9	8'- 8"	236
Reinforcing Steel			Lb	675
Class "C" Concrete			CY	6.3

ONE 5 PILE FOOTING				
Bar	No.	Size	Length	Weight
F1	20	#4	8'- 2"	109
F2	16	#9	8'- 2"	444
FC	24	#4	3'- 6"	56
FD (11)	8	#9	8'- 8"	236
Reinforcing Steel			Lb	845
Class "C" Concrete			CY	8.0

CONSTRUCTION NOTES:

See Bridge Layout for foundation type required. Use these foundation details unless shown otherwise.

Provide Class C Concrete (f'c = 3600 psi), unless shown otherwise.

Provide Grade 60 reinforcing steel.

Drive piling under abutment wingwalls to a minimum resistance of 10 Tons/Pile unless shown otherwise.

GENERAL NOTES:

Designed according to AASHTO LRFD Specifications.

Cover dimensions are clear dimensions, unless noted otherwise.
Reinforcing bar dimensions shown are out-to-out of bar.

DESIGNER NOTES:

Do not use the Drilled Shaft details shown on this standard for retaining wall, noise wall, barrier or sign foundations without structural evaluation.

Do not use the footings shown on this standard in direct contact with salt water or exposed to salt water spray.

Maximum allowable pile loads for the footings shown are :

72 Tons/Pile with 24" Dia Columns
80 Tons/Pile with 30" Dia Columns
100 Tons/Pile with 36" Dia Columns
120 Tons/Pile with 42" Dia Columns

(3) Min lap with Column reinf:
#7 Bars = 2'-9"
#9 Bars = 4'-6"

(6) 1'-0" Min

(7) Or as shown on plans.

(8) See Layout for Type, Size and length of Piling.

(9) Number and size of FD bars must match Column reinforcing. Tie FD bars to the top of the bottom reinforcing mat.

(10) For 24" Columns, use #7 FD bars (6'-6") in place of #9 bars and deduct 130 lbs.
For 36" Columns, add 2 FD bars (59 lbs).

(11) For 24" Columns, use #7 FD bars (6'-6") in place of #9 bars and deduct 130 lbs.
For 36" Columns, add 2 FD bars (59 lbs).
For 42" Columns, add 6 FD bars (177 lbs)
(42" Columns disallowed on 3 Pile Footings)

DISCLAIMER:
The use of this standard is governed by the "Texas Engineering Practice Act". No warranty of any kind is made by TxDOT for any purpose whatsoever. TxDOT assumes no responsibility for the conversion of this standard to other formats or for incorrect results or damages resulting from its use.

DATE:
FILE:

SHEET 2 OF 2

Texas Department of Transportation — Bridge Division Standard

COMMON FOUNDATION DETAILS

FD

FILE: fdstde01.dgn	DN: TxDOT	CK: TxDOT	DW: TxDOT	CK: TxDOT
©TxDOT January 2015	CONT	SECT	JOB	HIGHWAY
REVISIONS	0849	01	046	TALLEY ROAD
	DIST		COUNTY	SHEET NO.
			BEXAR	429

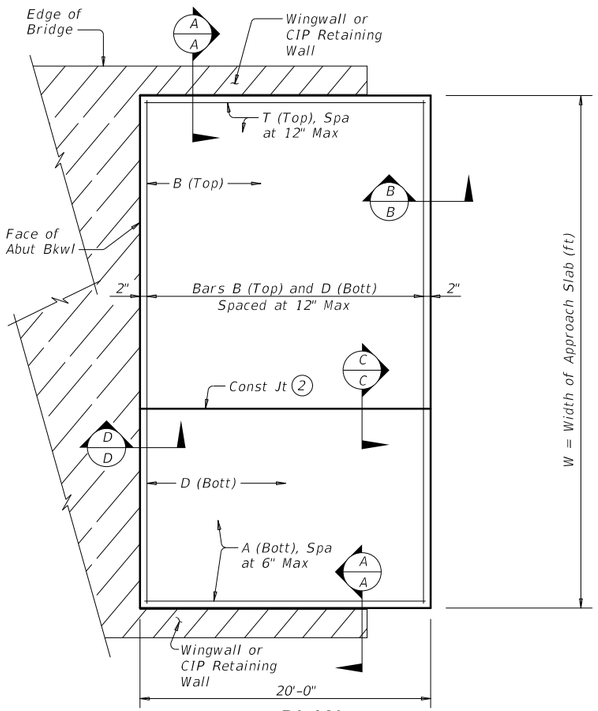

PLAN

(Showing Non-Skewed Approach Slab)

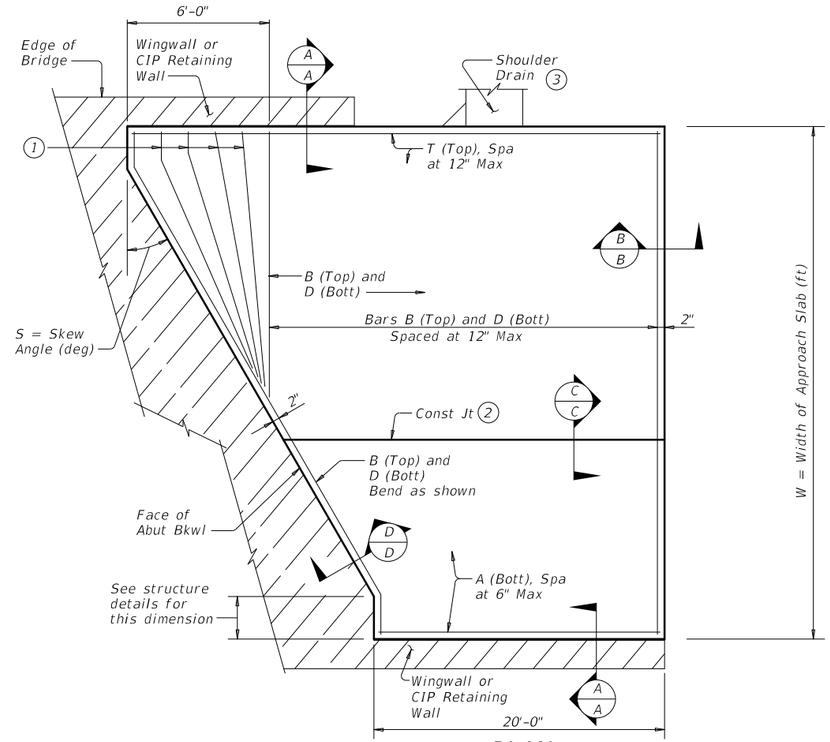

PLAN

(Showing Skewed Approach Slab)

BAR TABLE	
BAR	SIZE
A	#8
B	#5
D	#5
T	#5

APPROXIMATE QUANTITIES (4)

Reinf steel weight = 8.5 Lbs/SF of Approach Slab

Volume of Appr Slab Conc (CY) = $0.802W + 0.02W^2 \tan S$

W = Width of Approach Slab (ft)

S = Skew Angle (deg)

(1) Flare Bars B and D in this region (1'-6" Max Spa, 3" Min Spa). Minimum flared bar length = 2'-6". Bend bars as necessary.

(2) Provide longitudinal construction joints that align with longitudinal construction joints in the bridge slab with bridges built in stages. Other longitudinal construction joints must receive approval of the Engineer.

(3) See details elsewhere in plans for shoulder drain location and details.

(4) For Contractor's information only.

(5) Multiple piece tie bars are acceptable at longitudinal construction joints provided minimum laps shown are achieved.

(6) See details elsewhere in plans for required cross-slope.

(7) Place in accordance with Item 438.

(8) Backer rod shall be 25% larger than joint opening and shall be compatible with the sealant.

(9) Place ½" Preformed Bituminous Fiber Material between concrete railing and top of approach slab as shown when concrete railing projects over the approach slab.

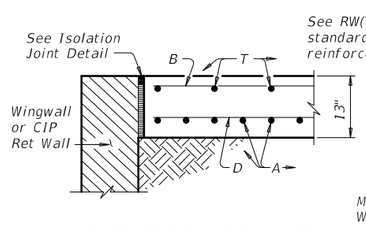

SHOWING WINGWALL OR CIP RETAINING WALL

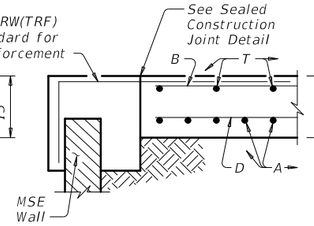

SHOWING MSE WALL

SECTION A-A

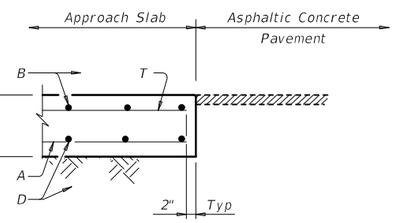

SECTION B-B

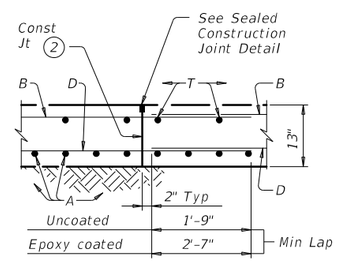

SECTION C-C (5)

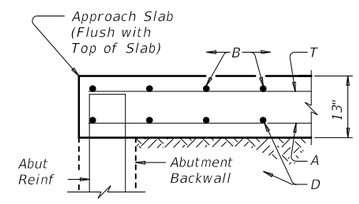

SECTION D-D

GENERAL NOTES:

Construct approach slab in accordance with Item 422.

Provide Class "S" concrete with a minimum compressive strength of 4,000 psi.

Provide Grade 60 reinforcing steel.

Construct the subgrade or subbase from the bridge for a minimum distance of 100 feet prior to the approach slab, unless otherwise indicated on the plans.

Compact and finish the subgrade or foundation for the approach slab to the typical cross-section and to the lines and grades shown on the plans.

Cure for 4 days using water or membrane curing per Item 422.

Sealant, backer rod and preformed bituminous fiber material are subsidiary to approach slab concrete.

Provide a 1" bondbreaker (asphaltic concrete pavement or asphalt stabilized base) between the approach slab and cement stabilized backfill or cement treated base. Other bondbreakers may be used if approved by the Engineer.

Cover dimensions are clear dimensions, unless noted otherwise.

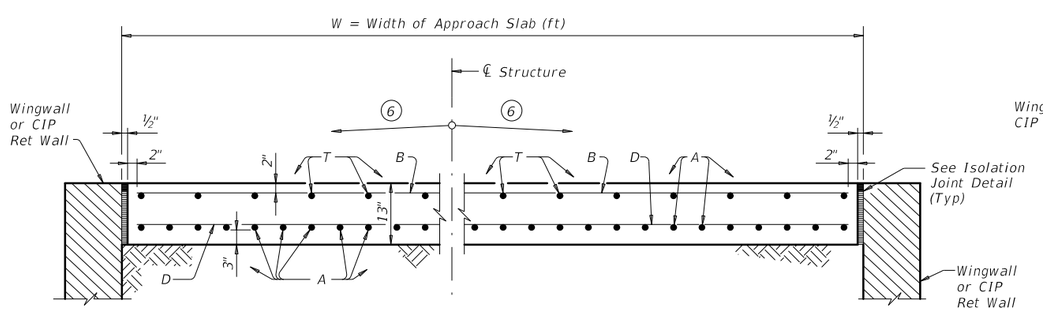

TYPICAL TRANSVERSE SECTION

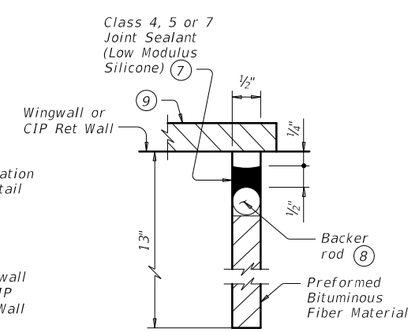

ISOLATION JOINT DETAIL

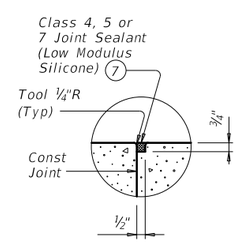

SEALED CONSTRUCTION JOINT DETAIL

Texas Department of Transportation

Bridge Division Standard

BRIDGE APPROACH SLAB

ASPHALTIC CONCRETE PAVEMENT

BAS-A

FILE: basaste1.dgn	DN: TxDOT	CK: TxDOT	DW: TxDOT	CK: TxDOT
©TxDOT January 2015	CONT	SECT	JOB	HIGHWAY
REVISIONS	0849	01	046	TALLEY ROAD
	DIST		COUNTY	SHEET NO.
			BEXAR	430

DISCLAIMER:
The use of this standard is governed by the "Texas Engineering Practice Act". No warranty of any kind is made by TxDOT for any purpose whatsoever. TxDOT assumes no responsibility for the conversion of this standard to other formats or for incorrect results or damages resulting from its use.

DATE:
FILE:

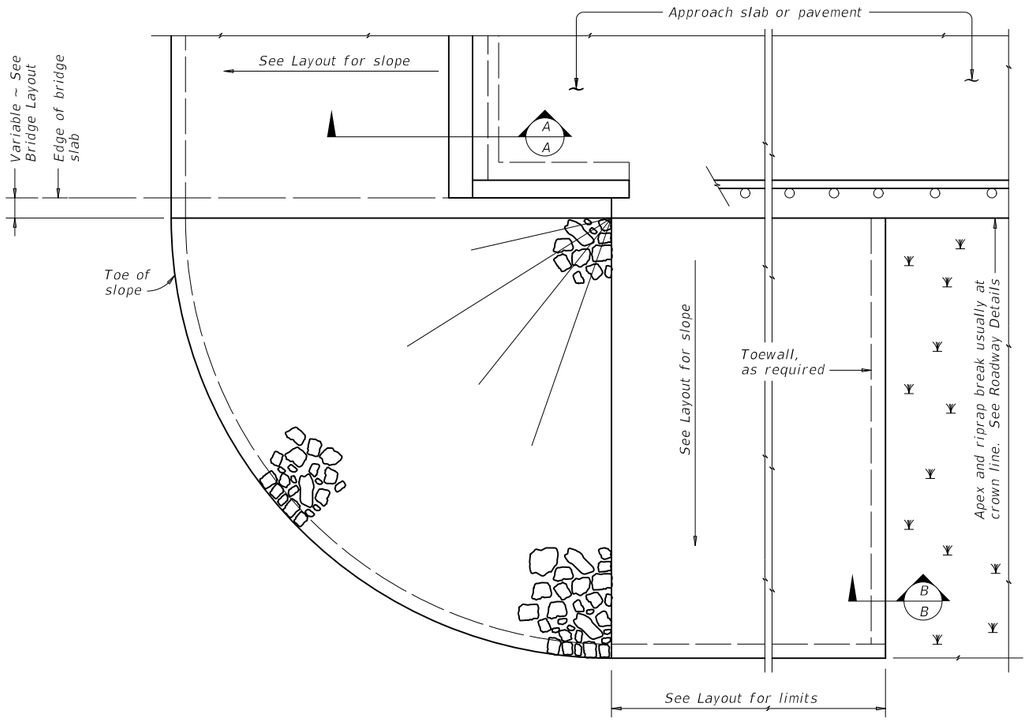

PLAN

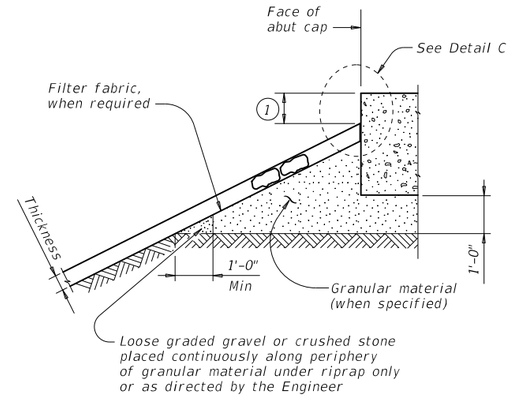

SECTION A-A AT CAP

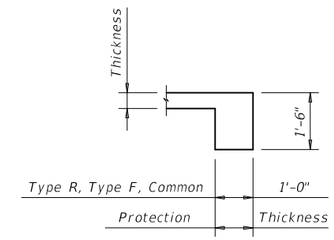

SECTION B-B

Provide toewall when shoulder drain is located adjacent to limits of stone riprap. Omit toewall when thickness of protection riprap is greater than 18".

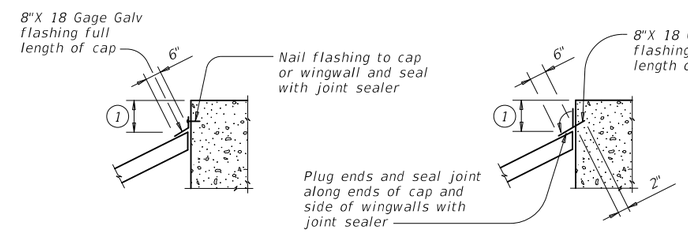

CAP OPTION A

CAP OPTION B

DETAIL C

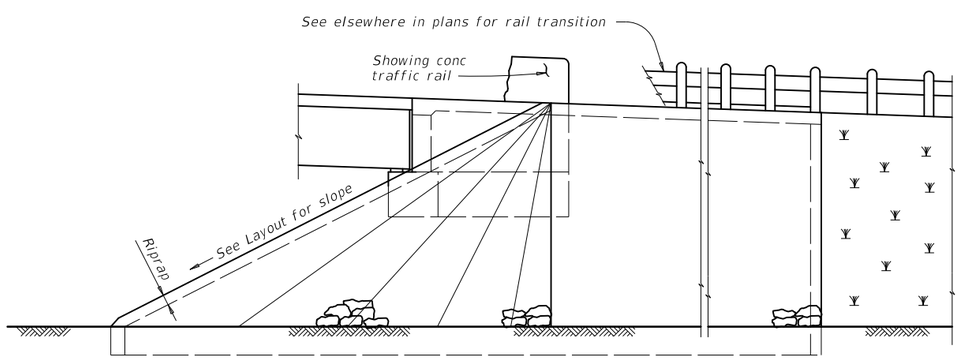

ELEVATION

(1) Top of cap to top of riprap dimension varies as directed by the Engineer. Provide 9" Min for beam/slab type bridges and 1'-6" for slab span, box beam, or slab beam bridges.

GENERAL NOTES:

Refer to Item 432, "Riprap" for stone size and gradation, and construction details. See Layout for limits and thickness of riprap specified.

See elsewhere in plans for locations and details of shoulder drains.

DISCLAIMER:
The use of this standard is governed by the "Texas Engineering Practice Act". No warranty of any kind is made by TxDOT for any purpose whatsoever. TxDOT assumes no responsibility for the conversion of this standard to other formats or for incorrect results or damages resulting from its use.

DATE:
FILE:

SHEET 1 OF 2

Texas Department of Transportation — Bridge Division Standard

STONE RIPRAP

SRR

FILE: srrstde1.dgn	DN: AES	CK: JGD	DW: BWH	CK: AES
©TxDOT January 2015	CONT	SECT	JOB	HIGHWAY
REVISIONS	0849	01	046	TALLEY ROAD
	DIST	COUNTY		SHEET NO.
		BEXAR		431

DISCLAIMER:
The use of this standard is governed by the "Texas Engineering Practice Act". No warranty of any kind is made by TxDOT for any purpose whatsoever. TxDOT assumes no responsibility for the conversion of this standard to other formats or for incorrect results or damages resulting from its use.

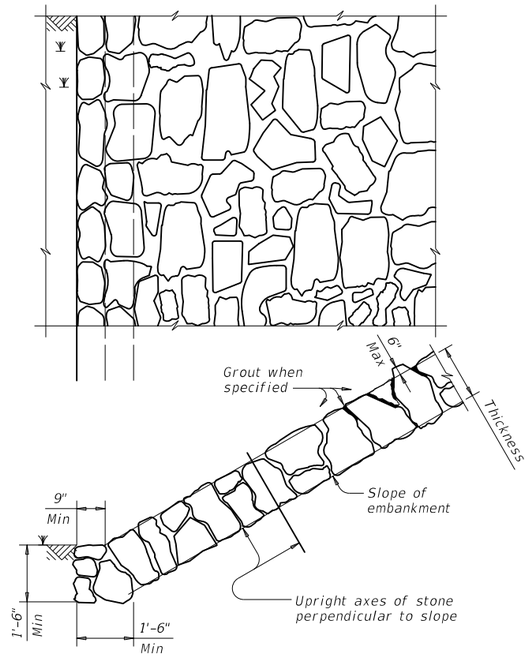

FIGURE 1 ~ TYPE R STONE RIPRAP

dry or grouted

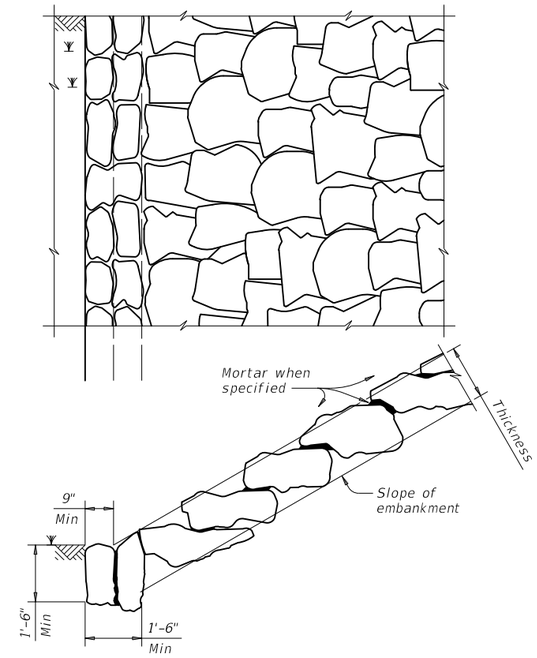

FIGURE 2 ~ TYPE F STONE RIPRAP

dry or mortared

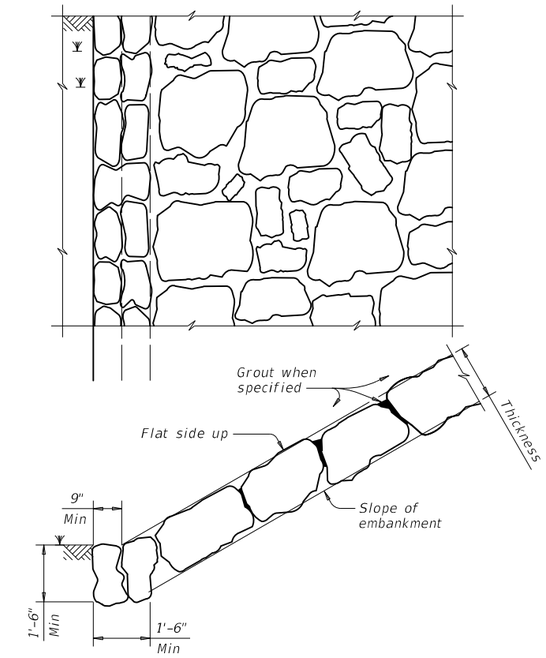

FIGURE 3 ~ TYPE F STONE RIPRAP

grouted

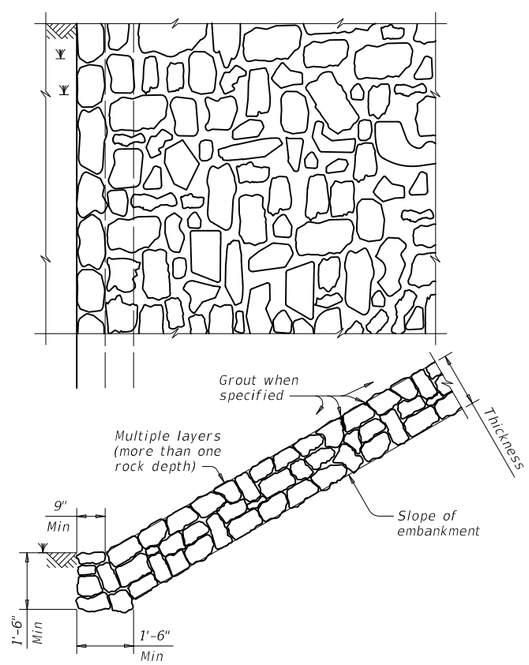

FIGURE 4 ~ COMMON STONE RIPRAP

dry or grouted

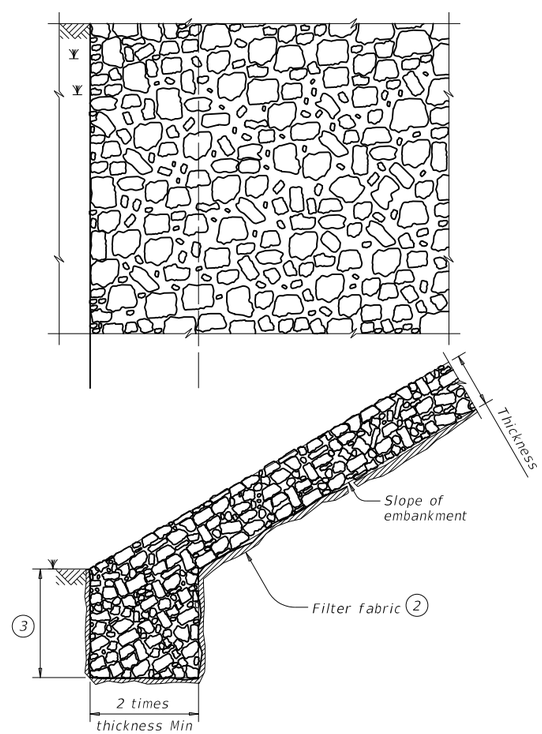

FIGURE 5 ~ PROTECTION STONE RIPRAP

(2) Provide bedding material instead of filter fabric if shown elsewhere in plans. See Layout for thickness of bedding material.

(3) Minimum toe depth is the larger of the maximum scour depth or 2 times the riprap thickness.

SHEET 2 OF 2

Texas Department of Transportation — Bridge Division Standard

STONE RIPRAP

SRR

FILE: srrstde1.dgn	DN: AES	CK: JGD	DW: BWH	CK: AES
©TxDOT January 2015	CONT	SECT	JOB	HIGHWAY
REVISIONS	0849	01	046	TALLEY ROAD
	DIST		COUNTY	SHEET NO.
			BEXAR	432

DATE:
FILE:

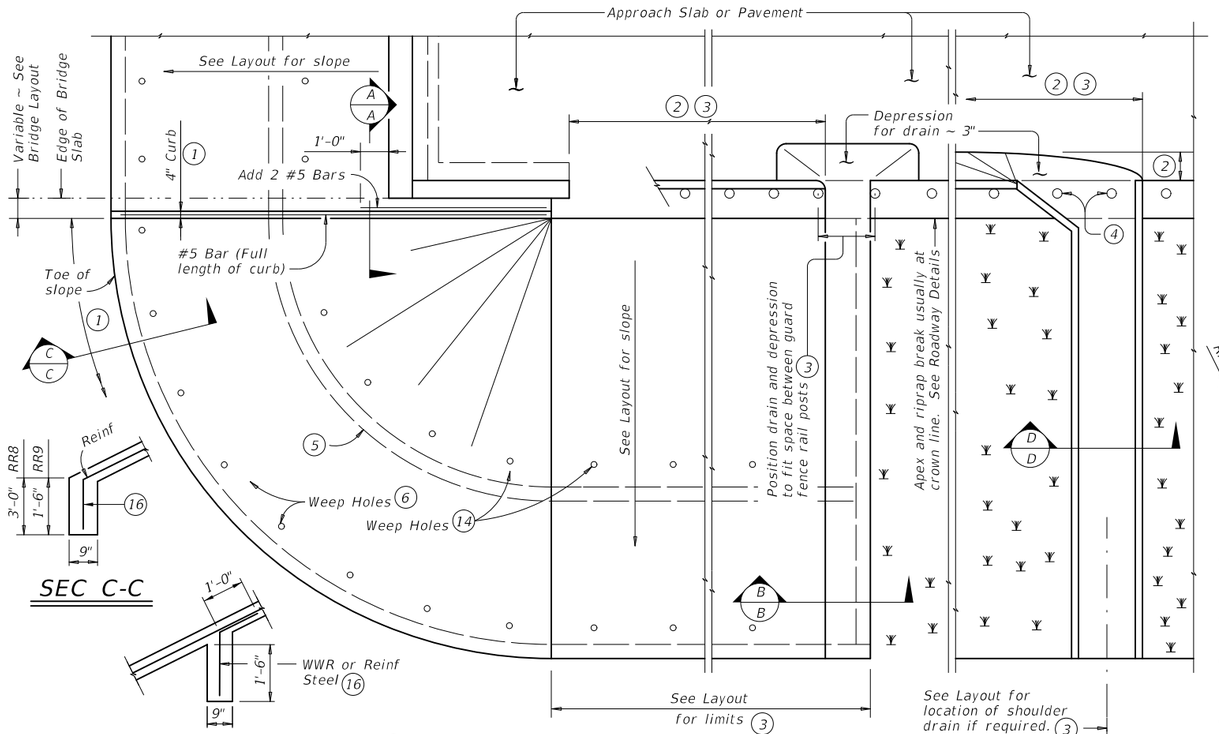

PLAN

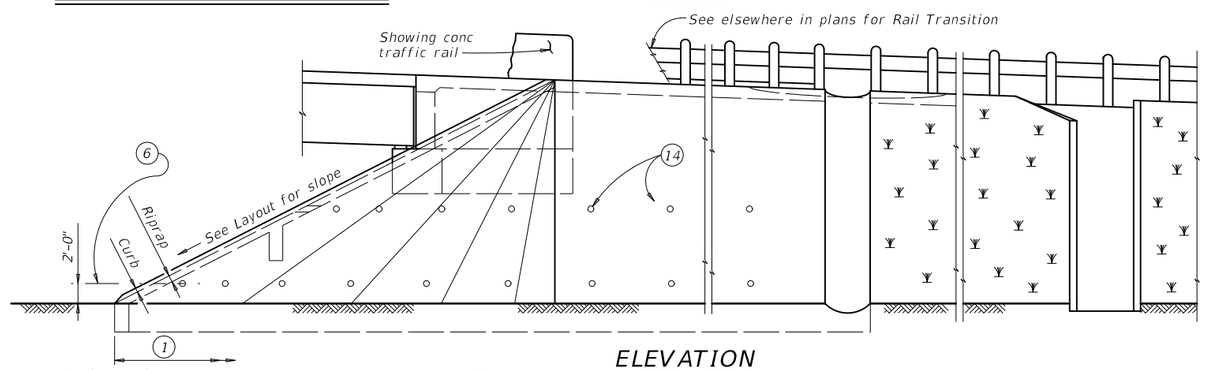

ELEVATION

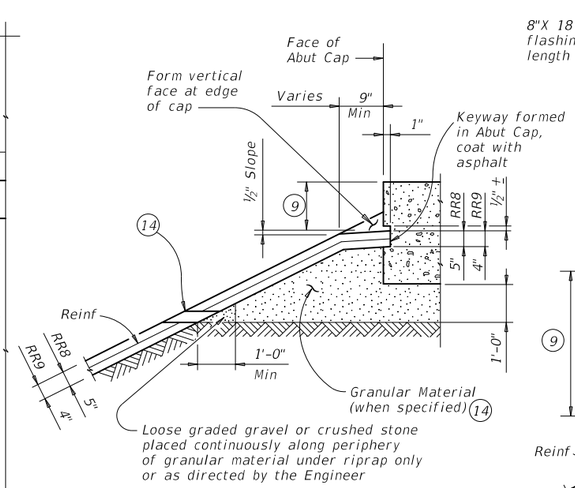

SHOWING KEYWAY OPTION

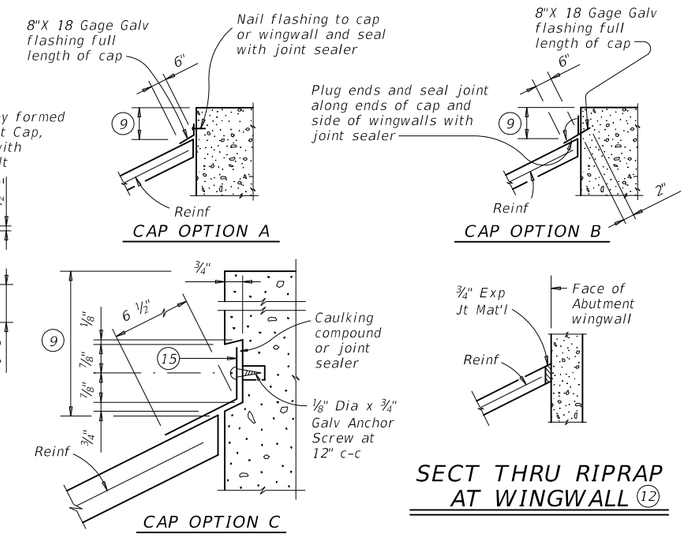

SECTIONS THRU RIPRAP AT CAP (11)

SECT THRU RIPRAP AT WINGWALL (12)

SEC C-C

INTERMEDIATE TOEWALL (5)

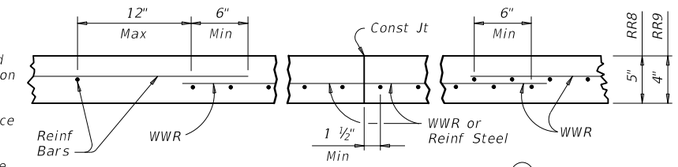

REINFORCEMENT DETAILS (13)

See General Notes for optional sythetic fiber reinforcement.

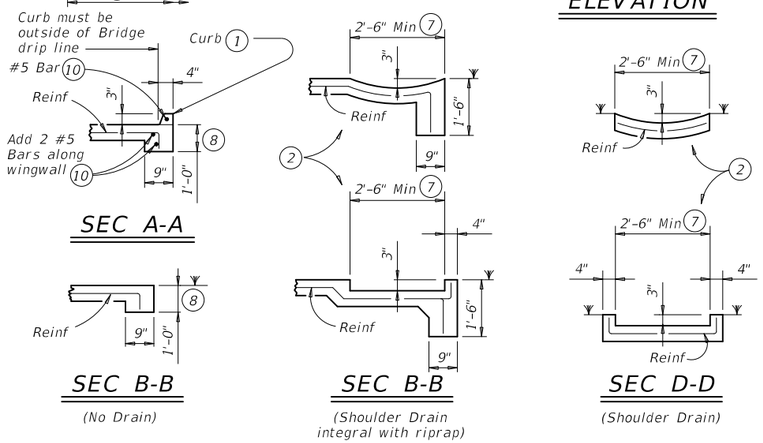

SEC A-A

SEC B-B (No Drain)

SEC B-B (Shoulder Drain integral with riprap)

SEC D-D (Shoulder Drain)

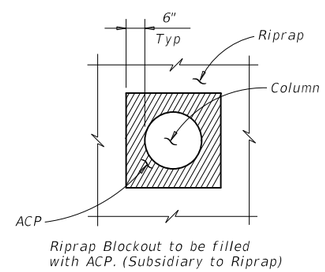

RIPRAP DETAIL AT COLUMNS

(As directed by the Engineer)

1. When riprap is shown extended around header on layout, extend slab and toewall as shown and eliminate 4" curb.
2. Limits and configuration of drains and depressions are as shown elsewhere in plans or as directed by the Engineer.
3. Location of shoulder drain must consider limitations imposed by rail transition. Do not locate shoulder drains at expansion joints between approach slab and concrete pavement.
4. See details elsewhere in plans for installation of guard fence posts through concrete riprap.
5. Provide intermediate toewall only when designated elsewhere in the plans or included in the specifications.
6. Provide lower level of 2" Dia weep holes at 10' c-c backed by 1 CF packet of gravel and galvanized hardware cloth at all locations unless directed by the Engineer to eliminate.
7. Use wider or other drain configurations if shown elsewhere in plans or if directed by the Engineer.
8. Wall extension may be reduced or modified if approved by the Engineer. Increase wall extension to 1'-6" whenever the optional intermediate toewall is called for in the plans.
9. Top of cap to top of riprap dimension varies as directed by the Engineer. Should be 9" Min for beam/slab type bridges and 1'-6" for slab span, box beam, or slab beam bridges.
10. #5 bars shown are required even when synthetic fiber reinforcing option is selected.
11. Provide sealing option for joint between the face of cap and riprap as designated by the Engineer or as shown elsewhere on plans.
12. Flashing (shown in Cap Option A) may be used at wingwall in addition to Exp Jt Mat'l if shown on plans or directed by the Engineer.
13. Provide #3 reinforcing bars at 18" Spa c-c. Provide Welded Wire Reinforcement (WWR) as 6x6-D3xD3. Combinations of WWR and reinforcing bars may be used if both are permitted. Use lap splices of a minimum 6 inches, measured from the transverse wire of WWR, and the ends of reinforcing bars.
14. If granular material is specified, provide upper level of 2" Dia weep holes at 10' c-c backed by galvanized hardware cloth.
15. 8" x 18 Gage Galv Sheet Metal
16. Provide WWR or #3 bars, with 1'-0" extension into slope.

FOR CONTRACTOR'S INFORMATION ONLY:
5" of RR8 = 0.015 CY/SF
4" of RR9 = 0.012 CY/SF
#3 Reinf at 18" c-c = 0.501 Lbs/SF
6x6-D3xD3 = 0.408 Lbs/SF

GENERAL NOTES:

Provide Class "B" concrete with a minimum compressive strength of 2,000 psi unless noted elsewhere in plans.

Provide Grade 60 reinforcing steel.

Provide synthetic fibers listed on the "Fibers for Concrete" Material Producer List (MPL) in lieu of steel reinforcing in riprap concrete unless noted otherwise.

Install construction joints or grooved joints extending the full slant slope height at intervals of approximately 20 feet unless otherwise directed by the Engineer.

Hardware cloth, loose grade stone behind weep holes, flashing, or other sealing material are subsidiary to the bid item "Riprap".

Use reinforcing bars, deformed Welded Wire Reinforcing (WWR), or any suitable combination of both types for riprap reinforcing, unless specified elsewhere in the plans.

See Layout for limits of riprap.

RR8 is to be used on stream crossings.

RR9 is to be used on other embankments.

DISCLAIMER:
The use of this standard is governed by the "Texas Engineering Practice Act". No warranty of any kind is made by TxDOT for any purpose whatsoever. TxDOT assumes no responsibility for the conversion of this standard to other formats or for incorrect results or damages resulting from its use.

DATE:
FILE:

Texas Department of Transportation — Bridge Division Standard

CONCRETE RIPRAP AND SHOULDER DRAINS
EMBANKMENTS AT BRIDGE ENDS (TYPES RR8 & RR9)

CRR

FILE: crrstde1.dgn	DN: TxDOT	CK: TxDOT	DW: TxDOT	CK: TxDOT
©TxDOT January 2015	CONT	SECT	JOB	HIGHWAY
REVISIONS	0849	01	046	TALLEY ROAD
	DIST		COUNTY	SHEET NO.
			BEXAR	433

CP&Y
CHECKPRINT

REVIEWER
Initial:
Date:
VERIFIED
Initial:
Date:
PROCESSED
Initial:
Date:
VERIFIED
Initial:
Date:

TEMPORARY SIGN SCHEDULE

S1 S2

S3

TEMPORARY SIGNAL HEAD SCHEDULE

SIGNALS
A, B, D, E, F, G
3-SECTION
12" VERTICAL
W/ BACKPLATE

SIGNAL
C
3-SECTION
12" VERTICAL
W/ BACKPLATE

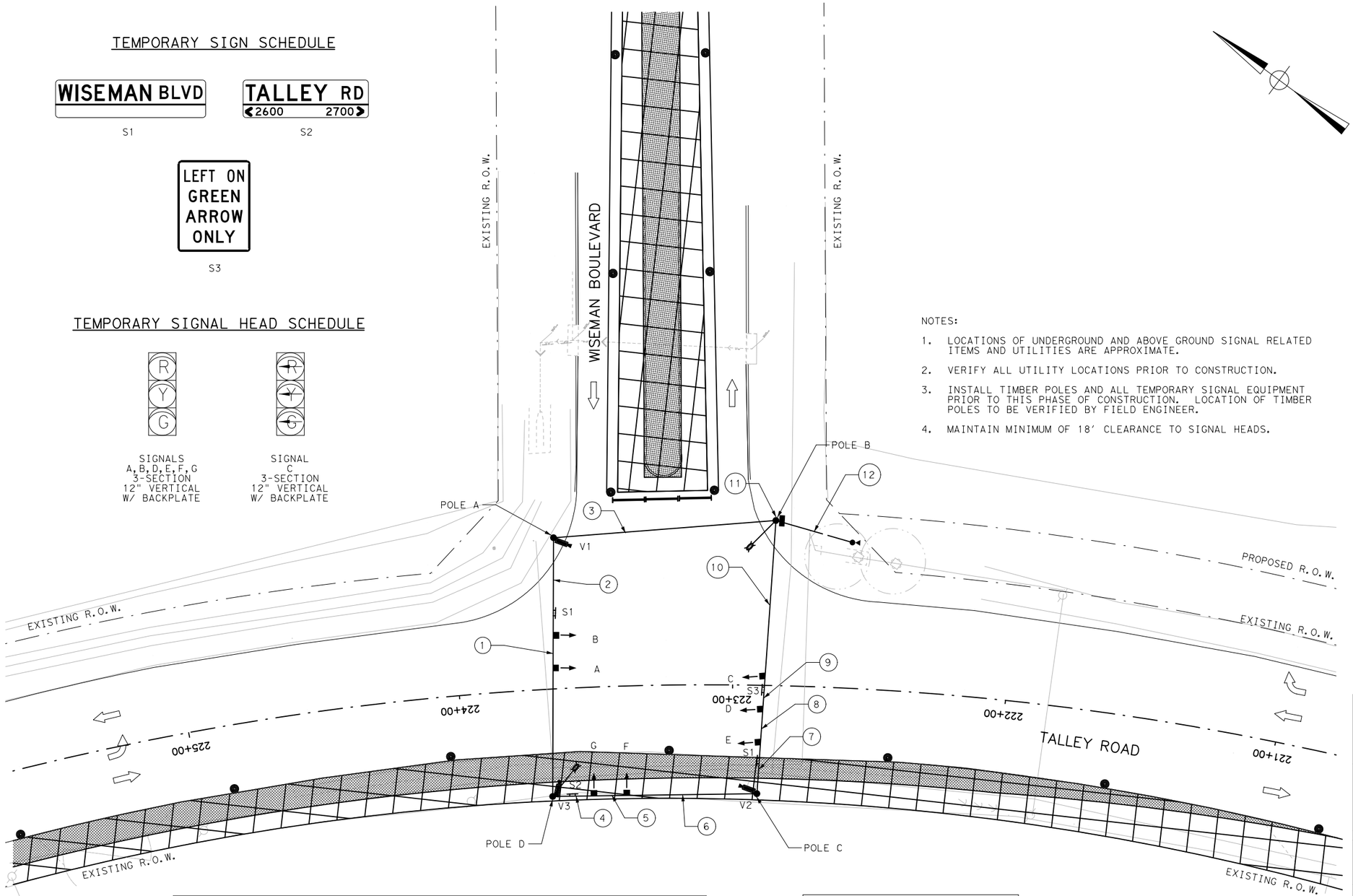

NOTES:

1. LOCATIONS OF UNDERGROUND AND ABOVE GROUND SIGNAL RELATED ITEMS AND UTILITIES ARE APPROXIMATE.
2. VERIFY ALL UTILITY LOCATIONS PRIOR TO CONSTRUCTION.
3. INSTALL TIMBER POLES AND ALL TEMPORARY SIGNAL EQUIPMENT PRIOR TO THIS PHASE OF CONSTRUCTION. LOCATION OF TIMBER POLES TO BE VERIFIED BY FIELD ENGINEER.
4. MAINTAIN MINIMUM OF 18' CLEARANCE TO SIGNAL HEADS.

LEGEND:

- TEMPORARY TIMBER POLE
- TEMPORARY VERTICAL SIGNAL HEAD W/ BACKPLATE
- TEMPORARY POLE MOUNTED CONTROLLER CABINET
- TEMPORARY ELECTRICAL SERVICE
- TEMPORARY LUMINAIRE
- CONDUIT
- TEMPORARY VIVDS CAMERA
- TEMPORARY OVERHEAD SIGN
- DIRECTION OF TRAFFIC FLOW
- CONSTRUCTION DRUM
- CONSTRUCTION AREA

20 10 0 20 40
SCALE FEET

90% SUBMITTAL

DOCUMENT IS FOR INTERIM REVIEW AND NOT INTENDED FOR CONSTRUCTION BIDDING, OR PERMIT PURPOSES.
SRIRAM NATARAJAN, PE
91090
TEXAS SERIAL NO.
2/21/2017
DATE

ELECTRICAL SCHEDULE

ITEM	RUN NUMBER	1	2	3	4	5	6	7	8	9	10	11*	12
POWER	1/C-#6 INSULATED												2
	1/C-#6 BARE												1
LUMINAIRE	2/C-#12 AWG			1	1	1	1	1	1	1	1		2
VEHICLE SIGNAL	4/C-#12 AWG	1	2	2		1	2	2	3	4	5	7	
VIVDS CABLE	3/C - #16 POWER			1	1	1	1	2	2	2	2	3	
	VIVDS COMM CABLE			1	1	1	1	2	2	2	2	3	
CONDUITS	2" PVC(SCHD.80)												1

*RUN DOWN THE POLE INTO THE POLE MOUNTED CONTROLLER

POLE SCHEDULE		
POLE	STATION	OFFSET
POLE A	223+62.68	55.2' R
POLE B	222+85.53	60.3' R
POLE C	222+90.41	39.7' L
POLE D	223+68.04	39.2' L

VIVDS CAMERA CHART	
CAMERA	DETECTION ZONE
V1	NORTHBOUND
V2	SOUTHBOUND
V3	WESTBOUND

BEXAR COUNTY
PUBLIC WORKS DEPARTMENT

NO	DATE	DESCRIPTION	DWG	CHK

REVISIONS

CP&Y
T.B.P.E. FIRM # 1741

RPS klotz associates
7550 IH-10, Northwest Center, Suite 300, San Antonio, Texas 78229
T 210.736.0425 • email@klotz.com • Texas PE Firm Reg. #F-929

TALLEY ROAD

TALLEY ROAD AT
WISEMAN BOULEVARD
TEMPORARY SIGNAL LAYOUT
PHASE 2

PROJECT NUMBER:		SHEET NO.
0849-01-046		434
DESIGNED BY: –	ROADWAY/HIGHWAY:	
CHECKED BY: –	TALLEY ROAD	
DRAWN BY: –	STATE	COUNTY
CHECKED BY: –	TEXAS	BEXAR

cpybw_ANSIB.tbl
cpypdf_ANSIB.pltcfg
pw:/Active Projects/BEXA14048.01/8.00 Plans and Drawings/8.30 Cut Sheets/8.3.11 Signals/14048TEMPSIG01.dgn
2/21/2017 3:46:09 PM amy.coxe

CP&Y CHECKPRINT

REVIEWER
Initial:
Date:
VERIFIED
Initial:
Date:
PROCESSED
Initial:
Date:
VERIFIED
Initial:
Date:

TEMPORARY SIGN SCHEDULE

S1 S2 S3

TEMPORARY SIGNAL HEAD SCHEDULE

SIGNALS A, B, D, E, F, G 3-SECTION 12" VERTICAL W/ BACKPLATE

SIGNAL C 3-SECTION 12" VERTICAL W/ BACKPLATE

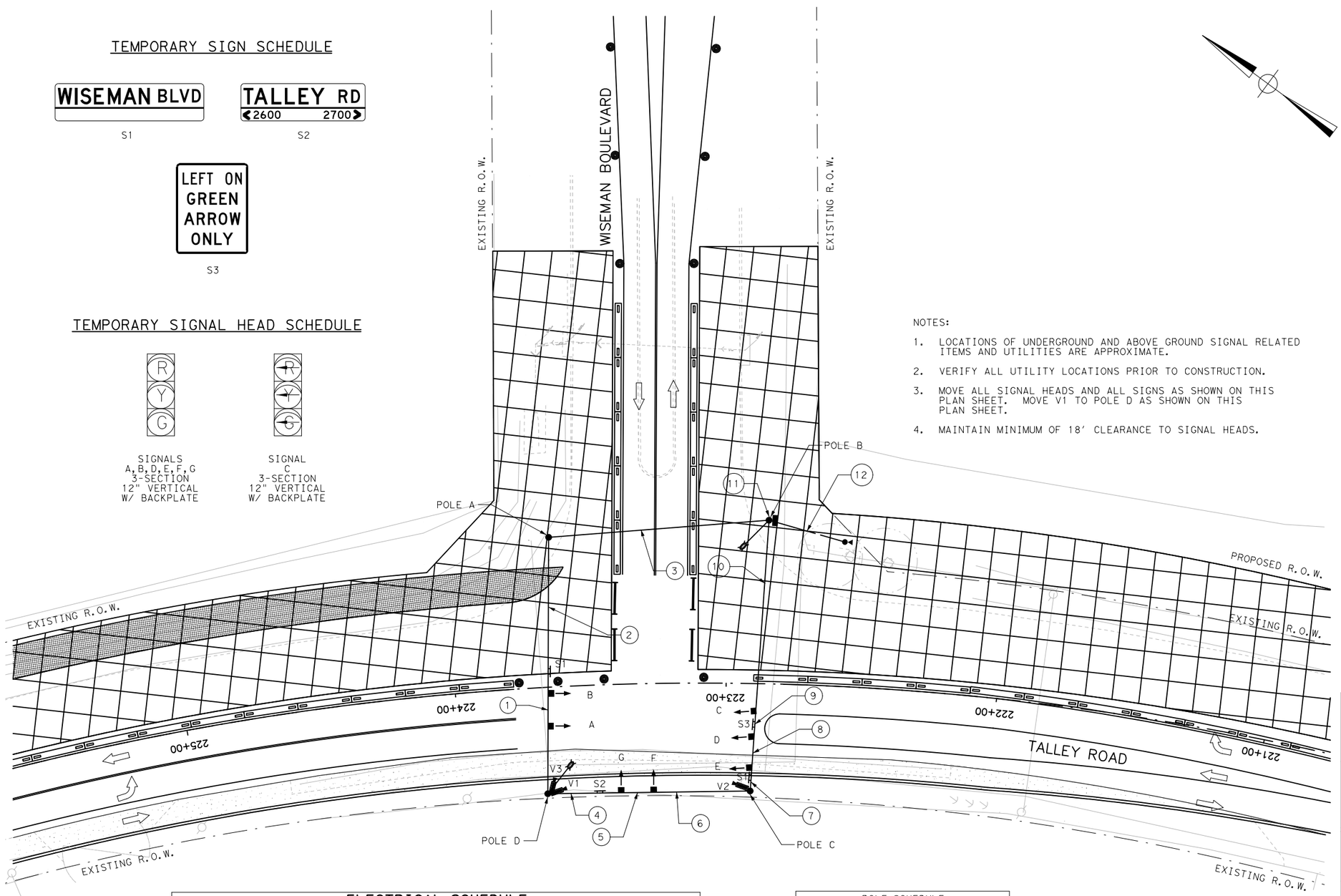

NOTES:

1. LOCATIONS OF UNDERGROUND AND ABOVE GROUND SIGNAL RELATED ITEMS AND UTILITIES ARE APPROXIMATE.
2. VERIFY ALL UTILITY LOCATIONS PRIOR TO CONSTRUCTION.
3. MOVE ALL SIGNAL HEADS AND ALL SIGNS AS SHOWN ON THIS PLAN SHEET. MOVE V1 TO POLE D AS SHOWN ON THIS PLAN SHEET.
4. MAINTAIN MINIMUM OF 18' CLEARANCE TO SIGNAL HEADS.

LEGEND:

- TEMPORARY TIMBER POLE
- TEMPORARY VERTICAL SIGNAL HEAD W/ BACKPLATE
- TEMPORARY POLE MOUNTED CONTROLLER CABINET
- TEMPORARY ELECTRICAL SERVICE
- TEMPORARY LUMINAIRE
- CONDUIT
- TEMPORARY VIDEO DETECTION
- TEMPORARY OVERHEAD SIGN
- DIRECTION OF TRAFFIC FLOW
- CONSTRUCTION DRUM
- CONSTRUCTION AREA

20 10 0 20 40
SCALE FEET

90% SUBMITTAL

DOCUMENT IS FOR INTERIM REVIEW AND NOT INTENDED FOR CONSTRUCTION BIDDING, OR PERMIT PURPOSES.

SRIRAM NATARAJAN, PE
91090
TEXAS SERIAL NO.
2/21/2017
DATE

ELECTRICAL SCHEDULE

ITEM	RUN NUMBER	1	2	3	4	5	6	7	8	9	10	11*	12
POWER	1/C-#6 INSULATED												2
	1/C-#6 BARE												1
LUMINAIRE	2/C-#12 AWG			1	1	1	1	1	1	1	1		2
VEHICLE SIGNAL	4/C-#12 AWG	1	2	2		1	2	2	3	4	5	7	
VIVDS CABLE	3/C - #16 POWER				2	2	2	3	3	3	3	3	
	VIVDS COMM CABLE				2	2	2	3	3	3	3	3	
CONDUITS	2" PVC(SCHD. 80)												1

*RUN DOWN THE POLE INTO THE POLE MOUNTED CONTROLLER

POLE SCHEDULE		
POLE	STATION	OFFSET
POLE A	223+62.68	55.2' R
POLE B	222+85.53	60.3' R
POLE C	222+90.41	39.7' L
POLE D	223+68.04	39.2' L

VIVDS CAMERA CHART	
CAMERA	DETECTION ZONE
V1	NORTHBOUND
V2	SOUTHBOUND
V3	WESTBOUND

BEXAR COUNTY
PUBLIC WORKS DEPARTMENT

NO	DATE	DESCRIPTION	DWG	CHK

REVISIONS

CP&Y
T.B.P.E. FIRM # 1741

RPS klotz associates
7550 IH-10, Northwest Center, Suite 300, San Antonio, Texas 78229
T 210.736.0425 • email@klotz.com • Texas PE Firm Reg. #F-929

TALLEY ROAD

TALLEY ROAD AT
WISEMAN BOULEVARD
TEMPORARY SIGNAL LAYOUT
PHASE 3A

PROJECT NUMBER:		SHEET NO.
0849-01-046		435
DESIGNED BY: –	ROADWAY/HIGHWAY:	
CHECKED BY: –	TALLEY ROAD	
DRAWN BY: –	STATE	COUNTY
CHECKED BY: –	TEXAS	BEXAR

CP&Y
CHECKPRINT

REVIEWER
Initial:
Date:
VERIFIED
Initial:
Date:
PROCESSED
Initial:
Date:
VERIFIED
Initial:
Date:

TEMPORARY SIGN SCHEDULE

S1 S2 S3

TEMPORARY SIGNAL HEAD SCHEDULE

SIGNALS A, B, D, E, F, G 3-SECTION 12" VERTICAL W/ BACKPLATE

SIGNAL C 3-SECTION 12" VERTICAL W/ BACKPLATE

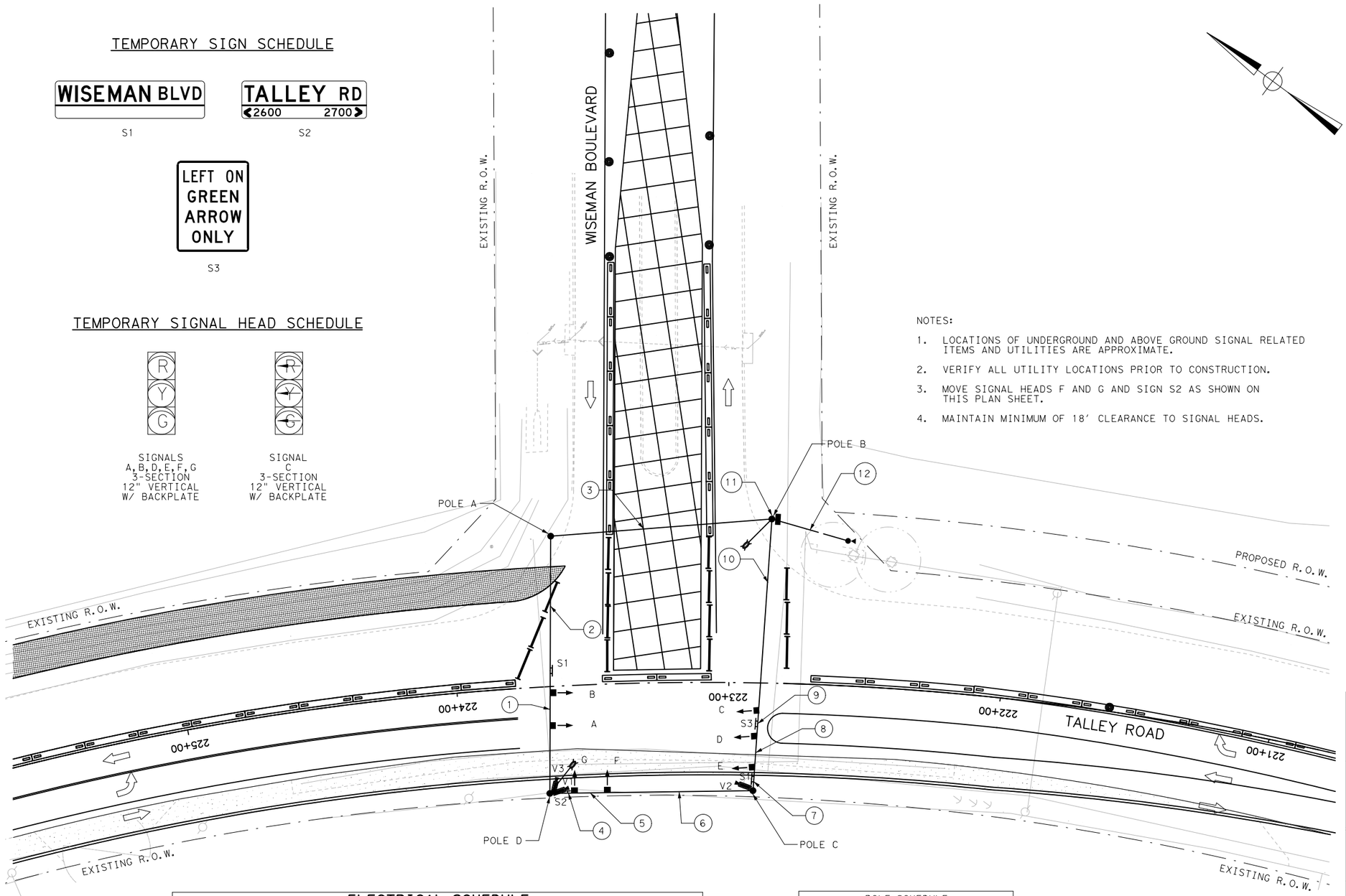

NOTES:

1. LOCATIONS OF UNDERGROUND AND ABOVE GROUND SIGNAL RELATED ITEMS AND UTILITIES ARE APPROXIMATE.
2. VERIFY ALL UTILITY LOCATIONS PRIOR TO CONSTRUCTION.
3. MOVE SIGNAL HEADS F AND G AND SIGN S2 AS SHOWN ON THIS PLAN SHEET.
4. MAINTAIN MINIMUM OF 18' CLEARANCE TO SIGNAL HEADS.

LEGEND:

- TEMPORARY TIMBER POLE
- TEMPORARY VERTICAL SIGNAL HEAD W/ BACKPLATE
- TEMPORARY POLE MOUNTED CONTROLLER CABINET
- TEMPORARY ELECTRICAL SERVICE
- TEMPORARY LUMINAIRE
- CONDUIT
- TEMPORARY VIDEO DETECTION
- TEMPORARY OVERHEAD SIGN
- DIRECTION OF TRAFFIC FLOW
- CONSTRUCTION DRUM
- CONSTRUCTION AREA

20 10 0 20 40
SCALE FEET

90% SUBMITTAL

DOCUMENT IS FOR INTERIM REVIEW AND NOT INTENDED FOR CONSTRUCTION BIDDING, OR PERMIT PURPOSES.

SRIRAM NATARAJAN, PE
91090
TEXAS SERIAL NO.
2/21/2017
DATE

ELECTRICAL SCHEDULE

ITEM	RUN NUMBER	1	2	3	4	5	6	7	8	9	10	11*	12
POWER	1/C-#6 INSULATED												2
	1/C-#6 BARE												1
LUMINAIRE	2/C-#12 AWG			1	1	1	1	1	1	1	1		2
VEHICLE SIGNAL	4/C-#12 AWG	1	2	2		1	2	2	3	4	5	7	
VIVDS CABLE	3/C - #16 POWER				2	2	2	3	3	3	3	3	
	VIVDS COMM CABLE				2	2	2	3	3	3	3	3	
CONDUITS	2" PVC(SCHD. 80)												1

*RUN DOWN THE POLE INTO THE POLE MOUNTED CONTROLLER

POLE SCHEDULE		
POLE	STATION	OFFSET
POLE A	223+62.68	55.2' R
POLE B	222+85.53	60.3' R
POLE C	222+90.41	39.7' L
POLE D	223+68.04	39.2' L

VIVDS CAMERA CHART	
CAMERA	DETECTION ZONE
V1	NORTHBOUND
V2	SOUTHBOUND
V3	WESTBOUND

BEXAR COUNTY
PUBLIC WORKS DEPARTMENT

NO	DATE	DESCRIPTION	DWG	CHK

REVISIONS

CP&Y
T.B.P.E. FIRM # 1741

RPS klotz associates
7550 IH-10, Northwest Center, Suite 300, San Antonio, Texas 78229
T 210.736.0425 • email@klotz.com • Texas PE Firm Reg. #F-929

TALLEY ROAD

TALLEY ROAD AT
WISEMAN BOULEVARD
TEMPORARY SIGNAL LAYOUT
PHASE 3B

PROJECT NUMBER:		SHEET NO.
0849-01-046		436
DESIGNED BY: –	ROADWAY/HIGHWAY:	
CHECKED BY: –	TALLEY ROAD	
DRAWN BY: –	STATE	COUNTY
CHECKED BY: –	TEXAS	BEXAR

2/21/2017 3:47:59 PM amy.coxe
cpybw_ANSIB.tbl
cpypdf_ANSIB.pltcfg
pw:/Active Projects/BEXA14048.01/8.00 Plans and Drawings/8.30 Cut Sheets/8.3.11 Signals/14048TEMPSIG03.dgn

CP&Y CHECKPRINT

REVIEWER
Initial:
Date:
VERIFIED
Initial:
Date:
PROCESSED
Initial:
Date:
VERIFIED
Initial:
Date:

TEMPORARY SIGN SCHEDULE

S1 S2 S3

TEMPORARY SIGNAL HEAD SCHEDULE

SIGNALS A, B, D, E, F, G 3-SECTION 12" VERTICAL W/ BACKPLATE

SIGNAL C 3-SECTION 12" VERTICAL W/ BACKPLATE

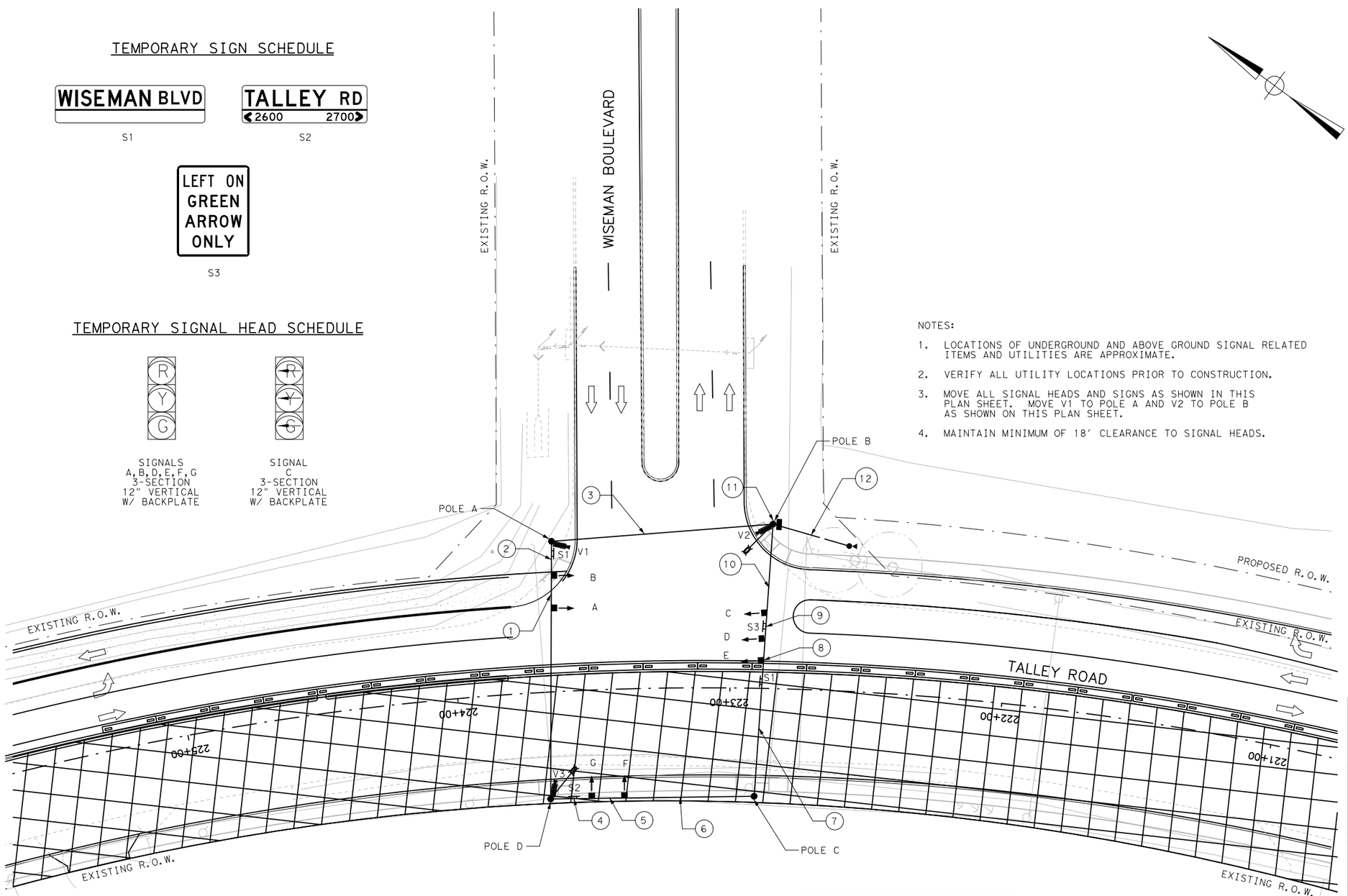

NOTES:

1. LOCATIONS OF UNDERGROUND AND ABOVE GROUND SIGNAL RELATED ITEMS AND UTILITIES ARE APPROXIMATE.
2. VERIFY ALL UTILITY LOCATIONS PRIOR TO CONSTRUCTION.
3. MOVE ALL SIGNAL HEADS AND SIGNS AS SHOWN IN THIS PLAN SHEET. MOVE V1 TO POLE A AND V2 TO POLE B AS SHOWN ON THIS PLAN SHEET.
4. MAINTAIN MINIMUM OF 18' CLEARANCE TO SIGNAL HEADS.

LEGEND:

- TEMPORARY TIMBER POLE
- TEMPORARY VERTICAL SIGNAL HEAD W/ BACKPLATE
- TEMPORARY POLE MOUNTED CONTROLLER CABINET
- TEMPORARY ELECTRICAL SERVICE
- TEMPORARY LUMINAIRE
- CONDUIT
- TEMPORARY VIDEO DETECTION
- TEMPORARY OVERHEAD SIGN
- DIRECTION OF TRAFFIC FLOW
- CONSTRUCTION DRUM
- CONSTRUCTION AREA

20 10 0 20 40
SCALE FEET

90% SUBMITTAL

DOCUMENT IS FOR INTERIM REVIEW AND NOT INTENDED FOR CONSTRUCTION BIDDING, OR PERMIT PURPOSES.

SRIRAM NATARAJAN, PE
91090
TEXAS SERIAL NO.
2/21/2017
DATE

ELECTRICAL SCHEDULE

ITEM	RUN NUMBER	1	2	3	4	5	6	7	8	9	10	11*	12
POWER	1/C-#6 INSULATED												2
	1/C-#6 BARE												1
LUMINAIRE	2/C-#12 AWG			1	1	1	1	1	1	1	1		2
VEHICLE SIGNAL	4/C-#12 AWG	1	2	2		1	2	2	3	4	5	7	
VIVDS CABLE	3/C - #16 POWER			1	1	1	1	1	1	1	1	3	
	VIVDS COMM CABLE			1	1	1	1	1	1	1	1	3	
CONDUITS	2" PVC(SCHD.80)												1

*RUN DOWN THE POLE INTO THE POLE MOUNTED CONTROLLER

POLE SCHEDULE		
POLE	STATION	OFFSET
POLE A	223+62.68	55.2' R
POLE B	222+85.53	60.3' R
POLE C	222+90.41	39.7' L
POLE D	223+68.04	39.2' L

VIVDS CAMERA CHART	
CAMERA	DETECTION ZONE
V1	NORTHBOUND
V2	SOUTHBOUND
V3	WESTBOUND

BEXAR COUNTY
PUBLIC WORKS DEPARTMENT

NO	DATE	DESCRIPTION	DWG	CHK

REVISIONS

CP&Y T.B.P.E. FIRM # 1741

RPS klotz associates
7550 IH-10, Northwest Center, Suite 300, San Antonio, Texas 78229
T 210.736.0425 • email@klotz.com • Texas PE Firm Reg. #F-929

TALLEY ROAD

TALLEY ROAD AT
WISEMAN BOULEVARD
TEMPORARY SIGNAL LAYOUT
PHASE 4

PROJECT NUMBER:		SHEET NO.
0849-01-046		437
DESIGNED BY: –	ROADWAY/HIGHWAY:	
CHECKED BY: –	TALLEY ROAD	
DRAWN BY: –	STATE	COUNTY
CHECKED BY: –	TEXAS	BEXAR

2/21/2017 3:48:32 PM amy.coxe
cpybw_ANSIB.tbl
cpypdf_ANSIB.pltcfg
pw:/Active Projects/BEXA14048.01/8.00 Plans and Drawings/8.30 Cut Sheets/8.3.11 Signals/14048TEMPSIG04.dgn

pw:/Active Projects/BEXA14048.01/8.00 Plans and Drawings/8.30 Cut Sheets/8.3.11 Signals/14048TEMPSIG04.dgn

CP&Y
CHECKPRINT

REVIEWER
Initial:
Date:
VERIFIED
Initial:
Date:
PROCESSED
Initial:
Date:
VERIFIED
Initial:
Date:

TEMPORARY SIGN SCHEDULE

Potranco Rd

S1

TEMPORARY SIGNAL HEAD SCHEDULE

SIGNALS
A,B
3-SECTION
12" VERTICAL
W/ BACKPLATE

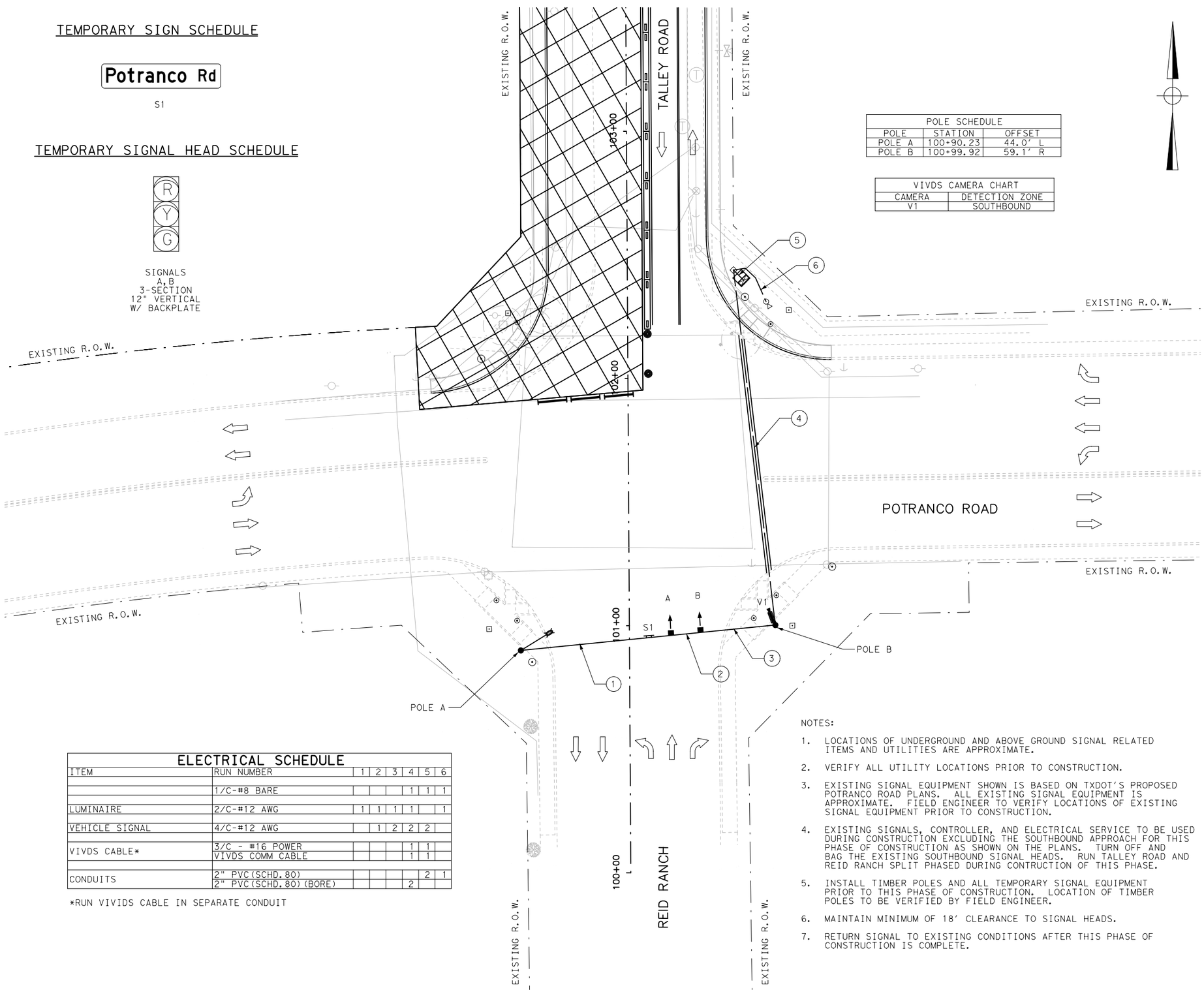

POLE SCHEDULE		
POLE	STATION	OFFSET
POLE A	100+90.23	44.0' L
POLE B	100+99.92	59.1' R

VIVDS CAMERA CHART	
CAMERA	DETECTION ZONE
V1	SOUTHBOUND

LEGEND:

- EXISTING SIGNAL POLE
- EXISTING PEDESTRIAN POLE
- EXISTING CONTROLLER
- EXISTING ELECTRICAL SERVICE
- EXISTING GROUND BOX
- TEMPORARY TIMBER POLE
- TEMPORARY VERTICAL SIGNAL HEAD W/ BACKPLATE
- TEMPORARY LUMINAIRE
- CONDUIT TRENCH
- CONDUIT BORE
- TEMPORARY VIDEO DETECTION
- TEMPORARY OVERHEAD SIGN
- DIRECTION OF TRAFFIC FLOW
- CONSTRUCTION DRUM
- CONSTRUCTION AREA

20 10 0 20 40
SCALE FEET

90% SUBMITTAL
DOCUMENT IS FOR INTERIM REVIEW AND NOT INTENDED FOR CONSTRUCTION BIDDING, OR PERMIT PURPOSES.
SRIRAM NATARAJAN, PE
91090
TEXAS SERIAL NO.
2/21/2017
DATE

ELECTRICAL SCHEDULE

ITEM	RUN NUMBER	1	2	3	4	5	6
	1/C-#8 BARE				1	1	1
LUMINAIRE	2/C-#12 AWG	1	1	1	1		1
VEHICLE SIGNAL	4/C-#12 AWG		1	2	2	2	
VIVDS CABLE*	3/C - #16 POWER				1	1	
	VIVDS COMM CABLE				1	1	
CONDUITS	2" PVC(SCHD.80)					2	1
	2" PVC(SCHD.80)(BORE)				2		

*RUN VIVIDS CABLE IN SEPARATE CONDUIT

NOTES:

1. LOCATIONS OF UNDERGROUND AND ABOVE GROUND SIGNAL RELATED ITEMS AND UTILITIES ARE APPROXIMATE.
2. VERIFY ALL UTILITY LOCATIONS PRIOR TO CONSTRUCTION.
3. EXISTING SIGNAL EQUIPMENT SHOWN IS BASED ON TXDOT'S PROPOSED POTRANCO ROAD PLANS. ALL EXISTING SIGNAL EQUIPMENT IS APPROXIMATE. FIELD ENGINEER TO VERIFY LOCATIONS OF EXISTING SIGNAL EQUIPMENT PRIOR TO CONSTRUCTION.
4. EXISTING SIGNALS, CONTROLLER, AND ELECTRICAL SERVICE TO BE USED DURING CONSTRUCTION EXCLUDING THE SOUTHBOUND APPROACH FOR THIS PHASE OF CONSTRUCTION AS SHOWN ON THE PLANS. TURN OFF AND BAG THE EXISTING SOUTHBOUND SIGNAL HEADS. RUN TALLEY ROAD AND REID RANCH SPLIT PHASED DURING CONTRUCTION OF THIS PHASE.
5. INSTALL TIMBER POLES AND ALL TEMPORARY SIGNAL EQUIPMENT PRIOR TO THIS PHASE OF CONSTRUCTION. LOCATION OF TIMBER POLES TO BE VERIFIED BY FIELD ENGINEER.
6. MAINTAIN MINIMUM OF 18' CLEARANCE TO SIGNAL HEADS.
7. RETURN SIGNAL TO EXISTING CONDITIONS AFTER THIS PHASE OF CONSTRUCTION IS COMPLETE.

BEXAR COUNTY
PUBLIC WORKS DEPARTMENT

NO	DATE	DESCRIPTION	DWG	CHK

REVISIONS

CP&Y
T.B.P.E. FIRM # 1741

RPS klotz associates
7550 IH-10, Northwest Center, Suite 300, San Antonio, Texas 78229
T 210.736.0425 • email@klotz.com • Texas PE Firm Reg. #F-929

TALLEY ROAD

TALLEY ROAD AT
POTRANCO ROAD
TEMPORARY SIGNAL LAYOUT
PHASE 4

PROJECT NUMBER:		SHEET NO.
0849-01-046		438
DESIGNED BY: –	ROADWAY/HIGHWAY:	
CHECKED BY: –	TALLEY ROAD	
DRAWN BY: –	STATE	COUNTY
CHECKED BY: –	TEXAS	BEXAR

cpybw_ANSIB.tbl
cpypdf_ANSIB.pltcfg
pw:/Active Projects/BEXA14048.01/8.00 Plans and Drawings/8.30 Cut Sheets/8.3.11 Signals/14048TEMPSIG05.dgn
2/21/2017 3:49:01 PM amy.coxe
pw:/Active Projects/BEXA14048.01/8.00 Plans and Drawings/8.30 Cut Sheets/8.3.11 Signals/14048TEMPSIG05.dgn

SUMMARY OF TRAFFIC SIGNAL QUANTITIES

				TALLEY ROAD AT WISEMAN BOULEVARD		TALLEY ROAD AT POTRANCO ROAD		TOTAL	
TXDOT 2014 SPECIFICATIONS									
ITEM NO.	DESC CODE	DESCRIPTION	UNIT	ESTIMATE	FINAL	ESTIMATE	FINAL	ESTIMATE	FINAL
416	6031	DRILL SHAFT (TRF SIG POLE) (30 IN)	LF	11		0		11	
416	6032	DRILL SHAFT (TRF SIG POLE) (36 IN)	LF	26		0		26	
618	6046	CONDT (PVC) (SCH 80) (2")	LF	100		0		100	
618	6047	CONDT (PVC) (SCH 80) (2") (BORE)	LF	210		0		210	
618	6053	CONDT (PVC) (SCH 80) (3")	LF	40		0		40	
618	6054	CONDT (PVC) (SCH 80) (3") (BORE)	LF	210		0		210	
618	6058	CONDT (PVC) (SCH 80) (4")	LF	10		0		10	
620	6007	ELEC CONDR (NO.8) BARE	LF	600		0		600	
620	6009	ELEC CONDR (NO.6) BARE	LF	25		0		25	
620	6010	ELEC CONDR (NO.6) INSULATED	LF	50		0		50	
624	6010	GROUND BOX TY D (162922)W/APRON	EA	3		0		3	
628	6241	ELC SRV TY D 120/240 100(NS)SS(E)SP(O)	EA	1		0		1	
680	6002	INSTALL HWY TRF SIG (ISOLATED)	EA	1		0		1	
	**	CITY OF SAN ANTONIO 332 CONTROLLER CABINET WITH FOUNDATION	EA	1		0		1	
	**	ROD, 5/8" X 10' COPPER GROUND (CONTROLLER ONLY)	EA	1		0		1	
	**	POWER SUPPLY	EA	1		0		1	
	**	BATTERY BACKUP SYSTEM (BBS)	EA	1		0		1	
	**	MAST ARM, 8' LUMINAIRE (HPS)	EA	2		0		2	
	**	CONTROL, PHOTOELECTRIC	EA	1		0		1	
	**	SIGN, "LEFT TURN ON GREEN ARROW ONLY" (30"X 36")(R10-12)	EA	1		0		1	
	**	SIGN, MANDATORY MOVEMENT LANE CONTROL, LEFT (30"X 36")(R3-5)	EA	1		0		1	
	**	SIGN, MANDATORY MOVEMENT LANE CONTROL, RIGHT (30"X 36")(R3-5a)	EA	1		0		1	
	**	SIGN, "TALLEY RD"	EA	1		0		1	
	**	SIGN, "WISEMAN BLVD"	EA	2		0		2	
681	6001	TEMP TRAF SIGNALS	EA	1		1		2	
682	6001	VEH SIG SEC (12")LED(GRN)	EA	7		0		7	
682	6002	VEH SIG SEC (12")LED(GRN ARW)	EA	1		0		1	
682	6003	VEH SIG SEC (12")LED(YEL)	EA	7		0		7	
682	6004	VEH SIG SEC (12")LED(YEL ARW)	EA	1		0		1	
682	6005	VEH SIG SEC (12")LED(RED)	EA	7		0		7	
682	6006	VEH SIG SEC (12")LED(RED ARW)	EA	1		0		1	
682	6018	PED SIG SEC (LED)(COUNTDOWN)	EA	6		0		6	
682	6023	BACK PLATE (12")(3 SEC)	EA	8		0		8	
684	6007	TRF SIG CBL (TY A)(12 AWG)(2 CONDR)	LF	400		0		400	
684	6009	TRF SIG CBL (TY A)(12 AWG)(4 CONDR)	LF	650		0		650	
684	6010	TRF SIG CBL (TY A)(12 AWG)(5 CONDR)	LF	730		0		730	
684	6025	TRF SIG CBL (TY A)(12 AWG)(20 CONDR)	LF	460		0		460	
686	6029	INS TRF SIG PL AM (S)1 ARM(28')	EA	1		0		1	
686	6039	INS TRF SIG PL AM(S)1 ARM(36')LUM	EA	1		0		1	
686	6043	INS TRF SIG PL AM(S)1 ARM(40')LUM	EA	1		0		1	
687	6001	PED POLE ASSEMBLY	EA	3		0		3	
	**	DRILL SHAFT (TRF SIG POLE) (24 IN)	LF	18		0		18	
688	6001	PED DETECT PUSH BUTTON (APS)	EA	6		0		6	
	**	SIGN, PEDESTRIAN PUSH BUTTON (9" X 15") (R10-3eL)	EA	3		0		3	
	**	SIGN, PEDESTRIAN PUSH BUTTON (9" X 15") (R10-3eR)	EA	3		0		3	
688	6003	PED DETECTOR CONTROLLER UNIT	EA	1		0		1	
BEXAR COUNTY SPECIFICATIONS									
ITEM NO.	DESC CODE	DESCRIPTION	UNIT	ESTIMATE	FINAL	ESTIMATE	FINAL	ESTIMATE	FINAL
1001	-	2070E CONTROLLER, FULL ACTUATED	EA	1		0		1	
1002	-	VIVDS SYSTEM	EA	1		0		1	
	**	VIVDS CAMERA ASSEMBLY	EA	5		0		5	
	**	VIVDS COMMUNICATION CABLE (COAXIAL)	LF	1100		0		1100	
	**	ETHERNET COMMUNICATION MODULE	EA	1		0		1	
	**	VIVDS PROCESSOR SYSTEM	EA	1		0		1	

** MATERIALS SUBSIDIARY TO PERTINENT ITEMS

90% SUBMITTAL

DOCUMENT IS FOR INTERIM REVIEW AND NOT INTENDED FOR CONSTRUCTION BIDDING, OR PERMIT PURPOSES.

SRIRAM NATARAJAN, PE
91090
TEXAS SERIAL NO.
2/21/2017
DATE

BEXAR COUNTY
PUBLIC WORKS DEPARTMENT

NO	DATE	DESCRIPTION	DWG	CHK

REVISIONS

CP&Y
T.B.P.E. FIRM # 1741

RPS klotz associates
7550 IH-10, Northwest Center, Suite 300, San Antonio, Texas 78229
T 210.736.0425 • email@klotz.com • Texas PE Firm Reg. #F-929

TALLEY ROAD

SUMMARY OF QUANTITIES
TRAFFIC SIGNALS

PROJECT NUMBER:	SHEET NO.
0849-01-046	439
DESIGNED BY:	ROADWAY/HIGHWAY:
CHECKED BY:	TALLEY ROAD
DRAWN BY:	STATE / COUNTY
CHECKED BY:	TEXAS / BEXAR

CP&Y CHECKPRINT
REVIEWER Initial: Date:
VERIFIED Initial: Date:
PROCESSED Initial: Date:
VERIFIED Initial: Date:

cpybw_ANSIB.tbl
cpypdf_ANSIB.pltcfg
pw:/Active Projects/BEXA14048.01/8.00 Plans and Drawings/8.30 Cut Sheets/8.3.11 Signals/14048SIGSUM.dgn
2/21/2017 3:45:34 PM amy.coxe

CP&Y
CHECKPRINT

REVIEWER
Initial:
Date:
VERIFIED
Initial:
Date:
PROCESSED
Initial:
Date:
VERIFIED
Initial:
Date:

TRAFFIC SIGNAL NOTES:

1. INSTALL SIGNALS VERTICALLY ON MAST ARM, 19 FT. ABOVE THE ROADWAY.
2. FURNISH YELLOW HOUSING FOR VEHICLE AND PEDESTRIAN SIGNALS. FURNISH BLACK VEHICLE SIGNAL HEAD BACK PLATES.
3. FURNISH VEHICLE AND PEDESTRIAN SIGNALS WITH LIGHT EMITTING DIODE (LED) SIGNAL LAMP UNITS.
4. FURNISH MOUNTING HARDWARE REQUIRED FOR ATTACHING VEHICLE SIGNAL HEADS TO THE TOP AND BOTTOM SWAY CABLES.
5. USE HIGH SPECIFIC INTENSITY REFLECTIVE SHEETING FOR SIGNS MOUNTED UNDER OR ADJACENT TO THE SIGNAL HEADS.
6. FURNISH SYMBOL TYPE PEDESTRIAN COUNTDOWN SIGNALS. INSTALL USING MOUNTING HEIGHT IN ACCORDANCE WITH THE LATESTTEXAS MANUAL ON UNIFORM TRAFFIC CONTROL DEVICES.
7. FURNISH MATERIALS NECESSARY TO INSTALL ACCESSIBLE PEDESTRIAN SIGNAL UNITS (APS) AND SIGNS AS SHOWN IN THE PLANS. INSTALL APS AT 3 FT. – 6 IN. TO 4 FT. – 0 IN. ABOVE THE SIDEWALK OR CONCRETE WALKWAY.
8. ROUTE CABLE FOR LUMINAIRES (#12/2C – TRAY CABLE) TO THE SERVICE ENCLOSURE. SEE ELECTRICAL DETAIL SHEETS.
9. LOCATE CONTROLLER(S), SIGNAL POLES, DETECTORS, ETC., AS APPROVED.
10. FURNISH AND INSTALL URETHANE FOAM TO ENCLOSE THE ENDS OF EACH CONDUIT IMMEDIATELY AFTER INSTALLATION OF ALL SIGNAL AND ELECTRICAL CONDUCTORS.
11. CAP SPARE CONDUITS INSTALLED IN POLE FOUNDATIONS AND GROUND BOXES USING APPROVED CAPPING DEVICES.
12. DO NOT PLACE SIGNAL HEADS OVER THE ROADWAY UNTIL ALL NECESSARY MATERIALS ARE ON HAND AS APPROVED.
13. INSTALL TWO SET SCREWS ON ALL VEHICLE SIGNAL HEAD MOUNTING HARDWARE FITTINGS.
14. INSTALL A 5/8–IN. (MINIMUM) EYE BOLT FOR THE POINT OF ATTACHMENT BELOW THE SERVICE ENTRANCE WEATHERHEAD FOR THE SERVICE DROP TO STEEL OR WOOD POLE.
15. AIM LUMINAIRE ARMS MOUNTED ON TRAFFIC SIGNAL POLES PERPENDICULAR TO THE CENTERLINE OF THE ROADWAY IT IS INTENDED TO COVER, TO DEVELOP THE PROPER ILLUMINATION PATTERN FOR THE INTERSECTION.
16. PROVIDE 250 WATTHIGH PRESSURE SODIUM VAPOR LAMP LUMINAIRES OPERATING AT 240 VOLTS.
17. WRAP SIGNAL HEADS WITH DARK PLASTIC OR SUITABLE MATERIAL TO CONCEAL THE SIGNAL FACES FROM THE TIME OF INSTALLATION UNTIL PLACING INTO OPERATION.
18. GROUND STEEL MAST ARM POLE ASSEMBLIES IN ACCORDANCE WITH REQUIREMENTS SHOWN ON THE LATEST TRAFFIC SIGNAL POLE FOUNDATION STANDARD. USE THE GROUNDING LUG ON THE POLE TO GROUND THE POLE TO THE GROUND CONDUCTORS FROM THE CONDUITS.
19. VERIFY THE CORRECT MAST ARM POLE LENGTHS FOR EACH SIGNALIZED INTERSECTION PRIOR TO ORDERING THE EQUIPMENT.
20. INSTALL A CLOSE NIPPLE WITH LOCK NUT AND BUSHING (SIZE AS REQUIRED) WHERE THE CABLE ENTERS THE UPPER PORTION OF THE SIGNAL POLE.
21. FURNISH VIDEO IMAGING VEHICLE DETECTION SYSTEM (VIVDS) CABLE RECOMMENDED BY MANUFACTURER OR PURCHASE CABLE FROM THE SAME MANUFACTURER THAT SUPPLIED/PROVIDED THE VIVDS EQUIPMENT.
22. THE LOCATION OF THE VIVDS DETECTION ZONE IS APPROXIMATE. THE EXACT LOCATION WILL BE DETERMINED BY THE ENGINEER AND/OR DEPARTMENT'S TRAFFIC OPERATIONS SECTION.
23. CLAMP ALL CONDUITS ATTACHED TO SIGNAL POLE FOUNDATIONS OR WOOD POLES WITH CONDUIT STRAPS AND CLAMPS BACKS (MALLEABLE IRON) AT A MAXIMUM SPACING OF 5 FT. CENTER TO CENTER.
24. THE CONTRACTOR SUPPLIED CONTROLLER WILL BE DELIVERED TO BEXAR COUNTY FOR PROGRAMMING THE CONTROLLER PRIOR TO INSTALLATION.
25. ELECTRICAL POWER TO OPERATE THE TRAFFIC SIGNAL INSTALLATION(S) WILL BE PLACED INBEXAR COUNTY'S NAME. THIS INCLUDES ALL POWER TO OPERATE THE SIGNAL(S) DURING THE VARIOUS PHASES OF CONSTRUCTION AND DURING THE TEST PERIOD PRIOR TO ACCEPTANCE OF THE WORK BYBEXAR COUNTY.

90% SUBMITTAL

DOCUMENT IS FOR INTERIM REVIEW AND NOT INTENDED FOR CONSTRUCTION BIDDING, OR PERMIT PURPOSES.

SRIRAM NATARAJAN, PE
91090
TEXAS SERIAL NO.
2/21/2017
DATE

BEXAR COUNTY
PUBLIC WORKS DEPARTMENT

NO	DATE	DESCRIPTION	DWG	CHK

REVISIONS

CP&Y
T.B.P.E. FIRM # 1741

RPS klotz associates
7550 IH-10, Northwest Center, Suite 300, San Antonio, Texas 78229
T 210.736.0425 • email@klotz.com • Texas PE Firm Reg. #F-929

TALLEY ROAD

TRAFFIC SIGNAL NOTES

PROJECT NUMBER:		SHEET NO.
0849–01–046		440
DESIGNED BY: –	ROADWAY/HIGHWAY:	
CHECKED BY: –	TALLEY ROAD	
DRAWN BY: –	STATE	COUNTY
CHECKED BY: –	TEXAS	BEXAR

2/21/2017 3:51:32 PM amy.coxe
cpybw_ANSIB.tbl
cpypdf_ANSIB.pltcfg
pw:/Active Projects/BEXA14048.01/8.00 Plans and Drawings/8.30 Cut Sheets/8.3.11 Signals/14048SIGNOTES.dgn

CP&Y CHECKPRINT

REVIEWER
Initial:
Date:
VERIFIED
Initial:
Date:
PROCESSED
Initial:
Date:
VERIFIED
Initial:
Date:

EXISTING SIGNAL HEAD SCHEDULE

SIGNALS A, B, C, E, F, G, H
3-SECTION
12" VERTICAL
W/ BACKPLATE

SIGNAL D
3-SECTION
12" VERTICAL
W/ BACKPLATE

EXISTING SIGN SCHEDULE

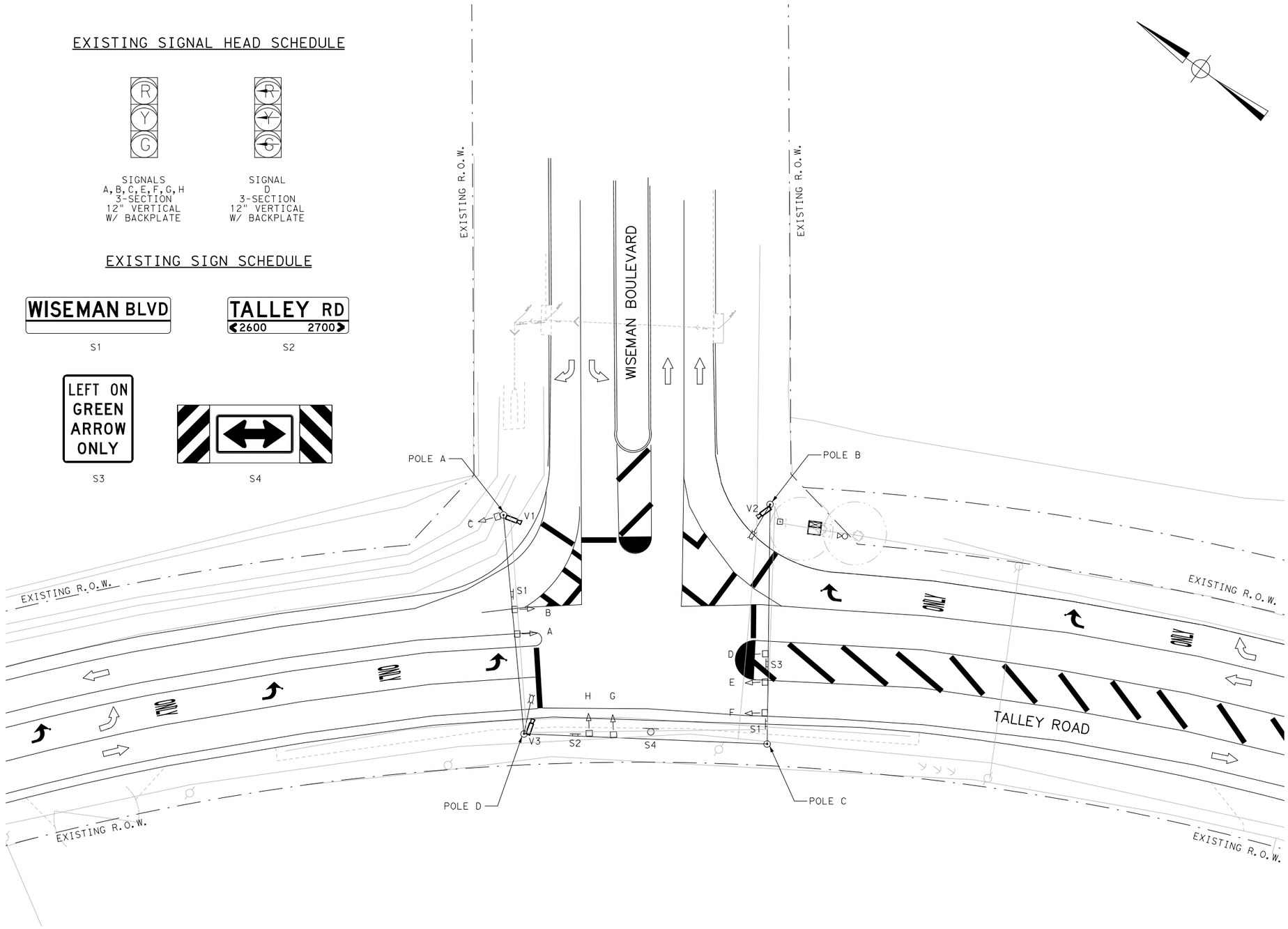

LEGEND:

- EXISTING TRAFFIC SIGNAL POLE
- EXISTING SPAN WIRE
- EXISTING VERTICAL SIGNAL HEAD
- EXISTING GROUND MOUNTED CONTROLLER CABINET
- EXISTING ELECTRICAL SERVICE
- EXISTING LUMINAIRE
- EXISTING VIDEO DETECTION (VIVDS)
- EXISTING GROUND BOX
- EXISTING OVERHEAD SIGN
- EXISTING SIGN ON POST
- DIRECTION OF TRAFFIC FLOW

20 10 0 20 40
SCALE FEET

90% SUBMITTAL

DOCUMENT IS FOR INTERIM REVIEW AND NOT INTENDED FOR CONSTRUCTION BIDDING, OR PERMIT PURPOSES.

SRIRAM NATARAJAN, PE
91090
TEXAS SERIAL NO.
2/21/2017
DATE

NOTES:

1. LOCATIONS OF UNDERGROUND AND ABOVE GROUND SIGNAL RELATED ITEMS AND UTILITIES ARE APPROXIMATE.
2. VERIFY ALL UTILITY LOCATIONS PRIOR TO CONSTRUCTION.
3. ALL EXISTING SIGNAL EQUIPMENT TO BE REMOVED AND RETURNED TO BEXAR COUNTY.

BEXAR COUNTY
PUBLIC WORKS DEPARTMENT

NO	DATE	DESCRIPTION	DWG	CHK

REVISIONS

CP&Y
T.B.P.E. FIRM # 1741

RPS klotz associates
7550 IH-10, Northwest Center, Suite 300, San Antonio, Texas 78229
T 210.736.0425 • email@klotz.com • Texas PE Firm Reg. #F-929

TALLEY ROAD

TALLEY ROAD AT
WISEMAN BOULEVARD
EXISTING SIGNAL LAYOUT

PROJECT NUMBER:		SHEET NO.
0849-01-046		441
DESIGNED BY: –	ROADWAY/HIGHWAY:	
CHECKED BY: –	TALLEY ROAD	
DRAWN BY: –	STATE	COUNTY
CHECKED BY: –	TEXAS	BEXAR

2/21/2017 3:49:34 PM amy.coxe
cpybw_ANSIB.tbl
cpypdf_ANSIB.pltcfg
pw:/Active Projects/BEXA14048.01/8.00 Plans and Drawings/8.30 Cut Sheets/8.3.11 Signals/14048SIG01.dgn
pw:/Active Projects/BEXA14048.01/8.00 Plans and Drawings/8.30 Cut Sheets/8.3.11 Signals/14048SIG01.dgn

CP&Y CHECKPRINT

REVIEWER
Initial:
Date:
VERIFIED
Initial:
Date:
PROCESSED
Initial:
Date:
VERIFIED
Initial:
Date:

PROPOSED SIGN SCHEDULE

EQUIPMENT DETAILS

- (A) PROPOSED TRAFFIC SIGNAL POLE W/ 36' MAST ARM, LUMINAIRE, PED HEAD, AND PED PUSH BUTTON.
- (B) PROPOSED PEDESTRIAN POLE W/ PROPOSED PED HEAD AND PED PUSH BUTTON.
- (C) PROPOSED PEDESTRIAN POLE W/ PROPOSED PED HEAD AND PED PUSH BUTTON.
- (D) PROPOSED TRAFFIC SIGNAL POLE W/ 40' MAST ARM, LUMINAIRE, PED HEAD, AND PED PUSH BUTTON.
- (E) PROPOSED TRAFFIC SIGNAL POLE W/ 28' MAST ARM, PED HEAD, AND PED PUSH BUTTON.
- (F) PROPOSED PEDESTRIAN POLE W/ PROPOSED PED HEAD AND PED PUSH BUTTON.

POLE SCHEDULE

POLE	STATION	OFFSET
ELECTRICAL SERVICE	222+62.62	57.4' R
POLE A	223+67.14	44.3' R
POLE B	222+87.22	61.5' R
POLE C	222+77.42	51.9' R
POLE D	222+87.17	39.7' L
POLE E	223+62.40	39.2' L
POLE F	223+75.21	39.2' L

LEGEND:

- PROPOSED MAST ARM AND POLE
- PROPOSED PEDESTRIAN POLE
- PROPOSED VERTICAL LED SIGNAL HEAD W/ BACKPLATE
- PROPOSED PEDESTRIAN LED SIGNAL HEAD
- PROPOSED PEDESTRIAN PUSHBUTTON AND SIGN
- PROPOSED GROUND MOUNTED COSA 332 CONTROLLER CABINET W/ FOUNDATION AND BBS
- PROPOSED ELECTRICAL SERVICE
- PROPOSED LUMINAIRE
- PROPOSED CONDUIT TRENCH
- PROPOSED CONDUIT BORE
- PROPOSED VIDEO DETECTION (VIVDS)
- PROPOSED GROUND BOX TY D W/APRON
- PROPOSED OVERHEAD SIGN
- PROPOSED VIVDS DETECTION ZONE
- DIRECTION OF TRAFFIC FLOW

20 10 0 20 40
SCALE FEET

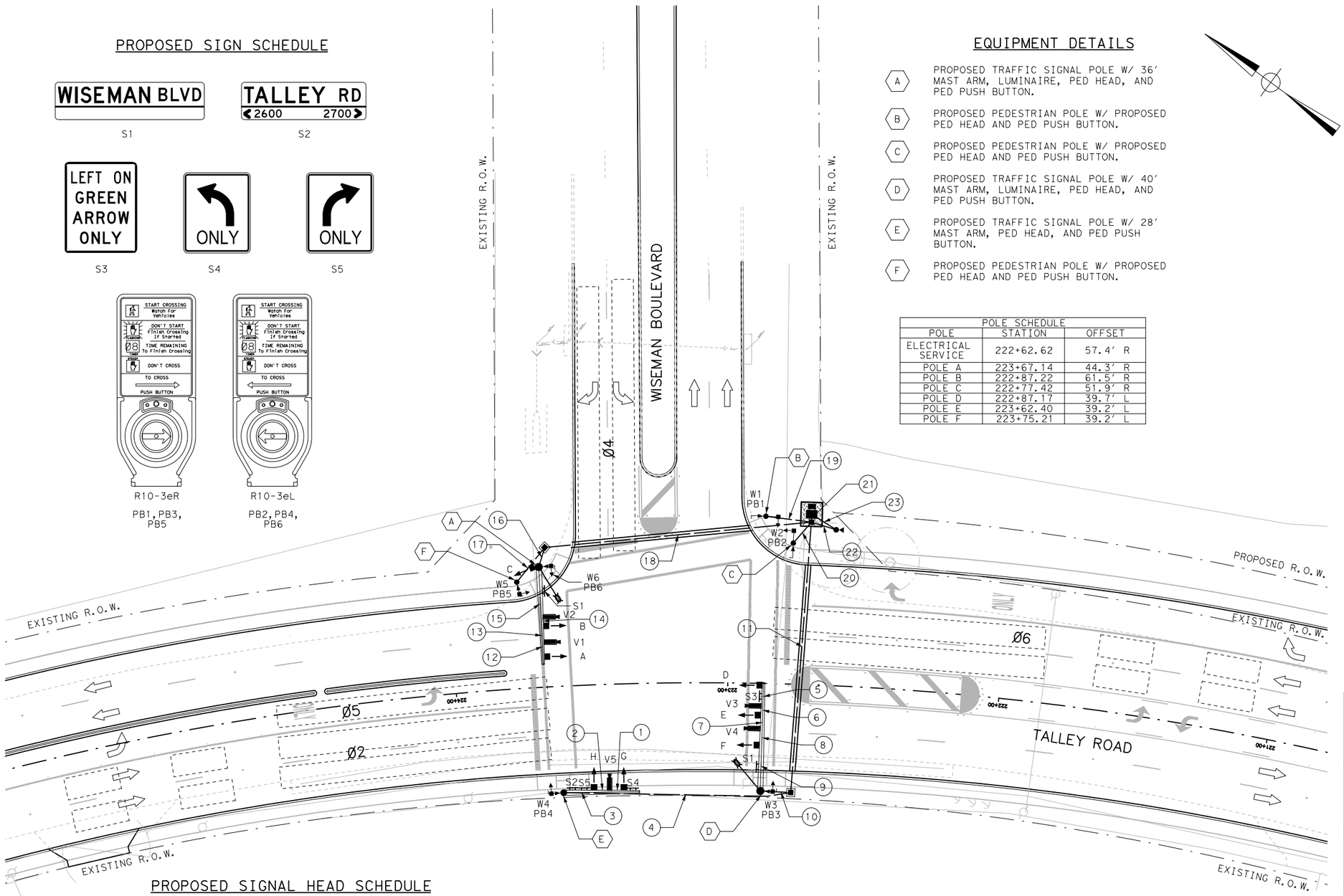

PROPOSED SIGNAL HEAD SCHEDULE

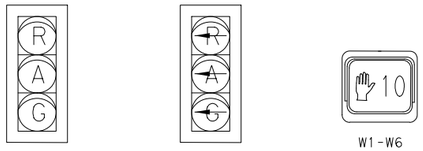

SIGNALS A, B, C, E, F, G, H
3-SECTION
12" VERTICAL
W/ BACKPLATE

SIGNAL D
3-SECTION
12" VERTICAL
W/ BACKPLATE

W1-W6

NOTES:

1. LOCATION OF UNDERGROUND AND ABOVE GROUND SIGNAL RELATED ITEMS AND UTILITIES ARE APPROXIMATE.
2. VERIFY ALL UTILITY LOCATIONS PRIOR TO CONSTRUCTION.
3. CONTRACTOR TO STAKE DRILL SHAFT LOCATIONS. ENGINEER TO FIELD VERIFY PRIOR TO DRILLING.

90% SUBMITTAL

DOCUMENT IS FOR INTERIM REVIEW AND NOT INTENDED FOR CONSTRUCTION BIDDING, OR PERMIT PURPOSES.

SRIRAM NATARAJAN, PE
91090
TEXAS SERIAL NO.
2/21/2017
DATE

BEXAR COUNTY
PUBLIC WORKS DEPARTMENT

NO	DATE	DESCRIPTION	DWG	CHK

REVISIONS

CP&Y T.B.P.E. FIRM # 1741

RPS klotz associates
7550 IH-10, Northwest Center, Suite 300, San Antonio, Texas 78229
T 210.736.0425 • email@klotz.com • Texas PE Firm Reg. #F-929

TALLEY ROAD

TALLEY ROAD AT
WISEMAN BOULEVARD
PROPOSED SIGNAL LAYOUT

PROJECT NUMBER:		SHEET NO.
0849-01-046		442
DESIGNED BY: –	ROADWAY/HIGHWAY:	
CHECKED BY: –	TALLEY ROAD	
DRAWN BY: –	STATE	COUNTY
CHECKED BY: –	TEXAS	BEXAR

cpybw_ANSIB.tbl
cpypdf_ANSIB.pltcfg
pw:/Active Projects/BEXA14048.01/8.00 Plans and Drawings/8.30 Cut Sheets/8.3.11 Signals/14048SIG02.dgn
2/21/2017 3:50:00 PM amy.coxe

CP&Y CHECKPRINT

REVIEWER
Initial:
Date:
VERIFIED
Initial:
Date:
PROCESSED
Initial:
Date:
VERIFIED
Initial:
Date:

ELECTRICAL SCHEDULE

ITEM	TOTAL QTY.	RUN NUMBER / RUN LENGTH (FT)	1 / 5	2 / 6	3 / 11	4 / 9	5 / 8	6 / 4	7 / 5	8 / 6	9 / 17	10 / 11	11 / 100	12 / 5	13 / 6	14 / 3	15 / 18	16 / 8	17 / 16	18 / 100	19 / 17	20 / 10	21 / 3	22 / 10	23 / 11
POWER	22	1/C–#6 INSULATED																							2
	11	1/C–#6 BARE																							1
	515	1/C–#8 BARE				2						2	2					2	1	2	1	1	2	1	
LUMINAIRE	239	2/C–#12 AWG										1	1					1		1				2	
PEDESTRIAN SIGNAL	489	5/C–#12 AWG				1						1	2					1	1	2	1	1	6		
VEHICLE SIGNAL	171	4/C–#12 AWG	1	1	2		1	1	2	2	3			1	1	2	2								
	337	20/C–#12 AWG				1						1	2					1		1			3		
VIVDS CABLE*	679	3/C – #16 POWER		1	1	1		1	1	2	2	2	3		1	1	2	2		2			5		
	679	VIVDS COMM CABLE		1	1	1		1	1	2	2	2	3		1	1	2	2		2			5		
CONDUITS	92	2" PVC(SCHD.80)				1						1						1	1		1	1		1	1
	200	2" PVC(SCHD.80)(BORE)											1							1					
	31	3" PVC(SCHD.80)				1						1						1					1		
	200	3" PVC(SCHD.80)(BORE)											1							1					
	6	4" PVC(SCHD.80)																					2		

* RUN VIVDS CABLES IN SEPARATE CONDUIT FROM ALL OTHER CABLES

INSIDE CABINET	12 AWG 5/C (FT)	12 AWG 20/C (FT)	VIVDS (FT)	#6 AWG (INS) (FT)	#6 AWG (BARE) (FT)
TOTAL	60	30	50	20	10

INSIDE POLES	12 AWG 2/C LUM (FT)	12 AWG 4/C (FT)	12 AWG 5/C (FT)	VIVDS (FT)
POLE A	35	80	10	40
POLE B			10	
POLE C			10	
POLE D	35	60	10	40
POLE E		40	10	20
POLE F			10	

INSIDE ARMS	12 AWG 4/C (FT)	VIVDS (FT)
POLE A	58	47
POLE D	85	55
POLE E	39	17

PHASING DIAGRAM

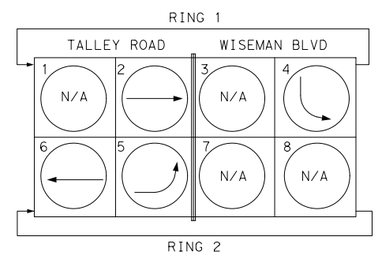

ORIENTATION VIEW

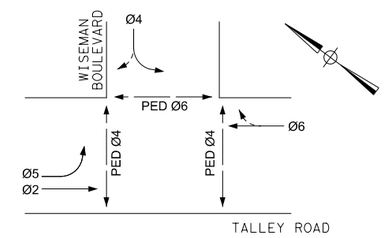

90% SUBMITTAL
DOCUMENT IS FOR INTERIM REVIEW AND NOT INTENDED FOR CONSTRUCTION BIDDING, OR PERMIT PURPOSES.
SRIRAM NATARAJAN, PE
91090
TEXAS SERIAL NO.
2/21/2017
DATE

ELECTRICAL SERVICE DATA

ELECTRICAL SERVICE ID	ELECTRICAL SERVICE DESCRIPTION(SEE ED(5)-14)	SERVICE CONDUIT SIZE	SERVICE CONDUCTORS NO./SIZE	SAFETY SWITCH AMPS	MAIN DISCONNECT CKT. BRK. POLE/AMP	TWO-POLE CONTACTOR AMPS	PANELBD./ LOADCENTER AMP RATING (MIN)	CIRCUIT NO.	BRANCH CKT. BRK. POLE/AMPS	KVA LOAD
TALLEY ROAD AT WISEMAN BLVD	TY D (120/240)100(NS)SS(E)SP(O)	1 1/4" SCH 80	3/#6	N/A	2P/100	30	100	T.S.	1P/50	<7.1
								Lighting	2P/20	

SIGNAL HEAD AND POLE PLACEMENT (FT)

POLE	A	B	C	D	E	F	G	NO. OF HEADS	8' LUM ARM	FND. TYPE	FND. DEPTH (FT)
POLE A	10	36	–	11	22	19	35	2	1	36–A	13
POLE D	8	40	11	11	17	19	35	3	1	36–A	13
POLE E	–	28	–	11	11	19	–	2	–	30–A	11

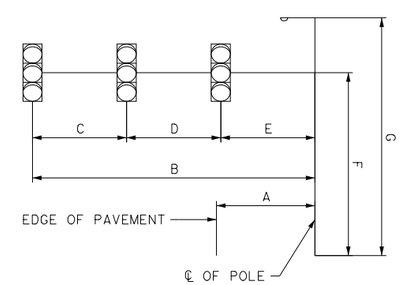

BEXAR COUNTY
PUBLIC WORKS DEPARTMENT

NO	DATE	DESCRIPTION	DWG	CHK

REVISIONS

CP&Y T.B.P.E. FIRM # 1741

RPS klotz associates
7550 IH-10, Northwest Center, Suite 300, San Antonio, Texas 78229
T 210.736.0425 • email@klotz.com • Texas PE Firm Reg. #F-929

TALLEY ROAD

TALLEY ROAD AT
WISEMAN BOULEVARD
TRAFFIC SIGNAL SCHEDULE
AND DETAILS

PROJECT NUMBER:		SHEET NO.
0849–01–046		443
DESIGNED BY: –	ROADWAY/HIGHWAY:	
CHECKED BY: –	TALLEY ROAD	
DRAWN BY: –	STATE	COUNTY
CHECKED BY: –	TEXAS	BEXAR

cpybw_ANSIB.tbl
cpypdf_ANSIB.pltcfg
pw:/Active Projects/BEXA14048.01/8.00 Plans and Drawings/8.30 Cut Sheets/8.3.11 Signals/14048SIG03.dgn
2/21/2017 3:50:31 PM amy.coxe

CP&Y
CHECKPRINT

REVIEWER
Initial:
Date:
VERIFIED
Initial:
Date:
PROCESSED
Initial:
Date:
VERIFIED
Initial:
Date:

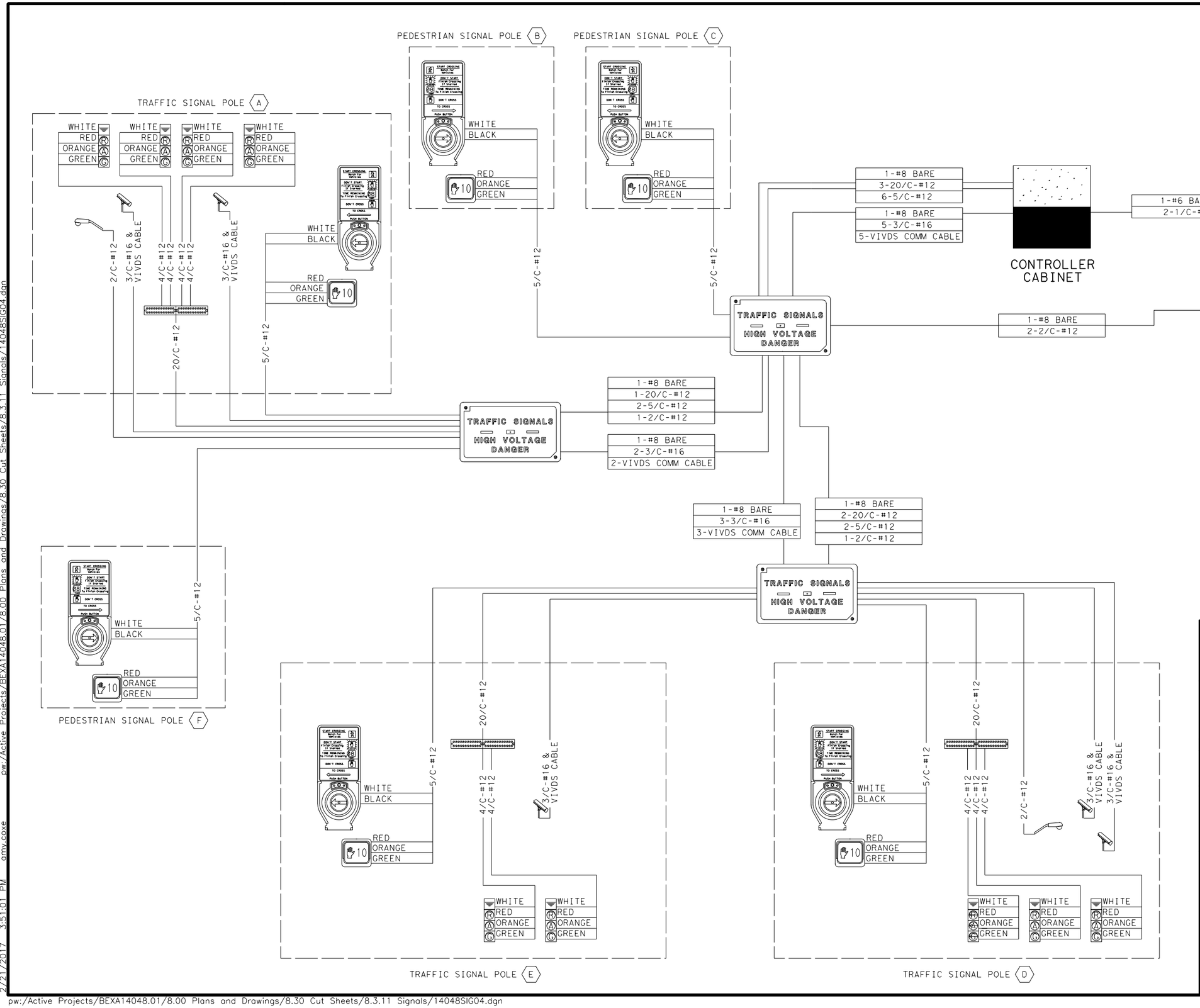

90% SUBMITTAL
DOCUMENT IS FOR INTERIM REVIEW AND NOT INTENDED FOR CONSTRUCTION BIDDING, OR PERMIT PURPOSES.
SRIRAM NATARAJAN, PE
91090
TEXAS SERIAL NO.
2/21/2017
DATE

BEXAR COUNTY
PUBLIC WORKS DEPARTMENT

NO	DATE	DESCRIPTION	DWG	CHK

REVISIONS

CP&Y
T.B.P.E. FIRM # 1741

RPS klotz associates
7550 IH-10, Northwest Center, Suite 300, San Antonio, Texas 78229
T 210.736.0425 • email@klotz.com • Texas PE Firm Reg. #F-929

TALLEY ROAD

TALLEY ROAD AT
WISEMAN BOULEVARD
WIRING DIAGRAM LAYOUT

PROJECT NUMBER:		SHEET NO.
0849-01-046		444
DESIGNED BY: –	ROADWAY/HIGHWAY:	
CHECKED BY: –	TALLEY ROAD	
DRAWN BY: –	STATE	COUNTY
CHECKED BY: –	TEXAS	BEXAR

2/21/2017 3:51:01 PM amy.coxe
cpybw_ANSIB.tbl
cpypdf_ANSIB.pltcfg
pw:/Active Projects/BEXA14048.01/8.00 Plans and Drawings/8.30 Cut Sheets/8.3.11 Signals/14048SIG04.dgn

pw:/Active Projects/BEXA14048.01/8.00 Plans and Drawings/8.30 Cut Sheets/8.3.11 Signals/14048SIG04.dgn

CP&Y
CHECKPRINT

REVIEWER
Initial:
Date:
VERIFIED
Initial:
Date:
PROCESSED
Initial:
Date:
VERIFIED
Initial:
Date:

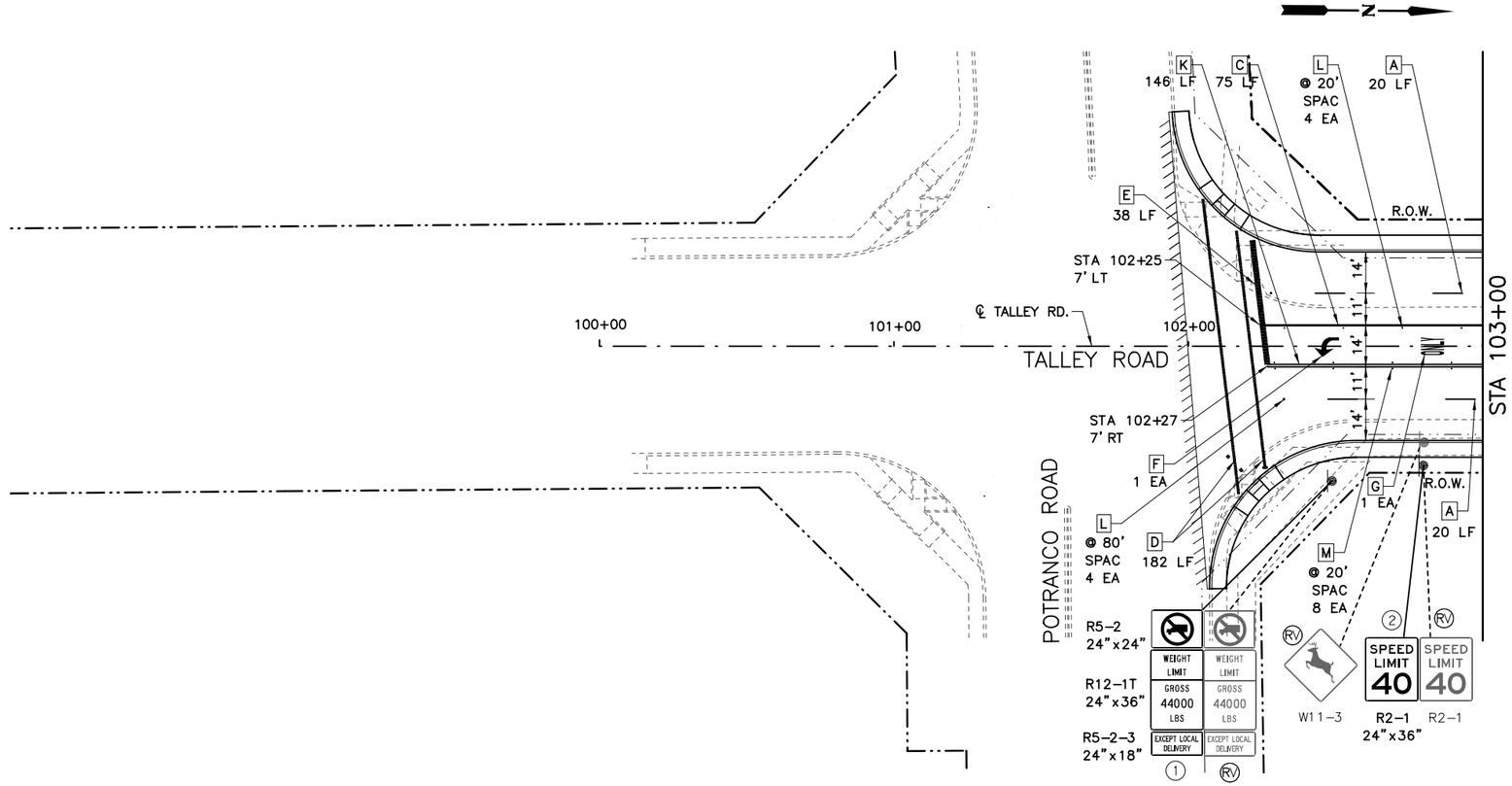

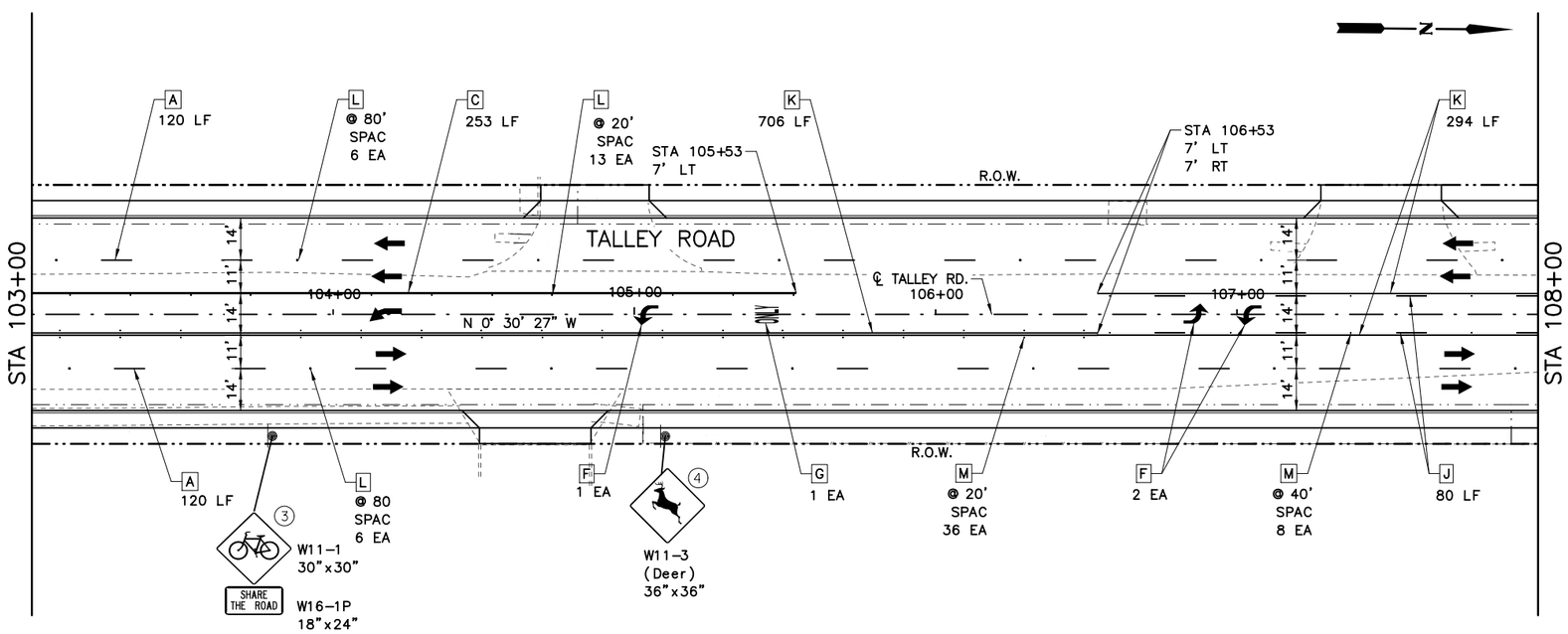

25 12.5 0 25 50
SCALE FEET

LEGEND:

- A RE PM W/RET REQ TY I (W)4"(BRK)(100MIL)
- B RE PM W/RET REQ TY I (W)4"(SLD)(100MIL)
- C REFL PAV MRK TY I (W)8"(SLD)(100MIL)
- D REFL PAV MRK TY I (W)12"(SLD)(100MIL)
- E REFL PAV MRK TY I (W)24"(SLD)(100MIL)
- F REFL PAV MRK TY I (W)(ARROW)(100MIL)
- G REFL PAV MRK TY I (W)(WORD)(100MIL)
- H REFL PAV MRK TY I (W)(BIKE ARW)(100MIL)
- I REFL PAV MRK TY I (W)(BIKE SYML)(100MIL)
- J RE PM W/RET REQ TY I (Y)4"(BRK)(100MIL)
- K RE PM W/RET REQ TY I (Y)4"(SLD)(100MIL)
- L REFL PAV MRKR TY I-C
- M REFL PAV MRKR TY II-A-A
- N REFL PAV MRKR TY I (Y)24")(SLD)(100MIL)
- O REFL PAV MRKR TY I (Y)MED NOSE(100MIL)

OBJECT MARKER — DELINEATOR
DIRECTION OF TRAFFIC — SIGN POST
(1) PROPOSED SIGN
(RV) EXISTING SIGN TO BE REMOVED
(RM) EXISTING SIGN TO REMAIN
(RL) EXISTING SIGN TO BE RELOCATED

90% SUBMITTAL

DOCUMENT IS FOR INTERIM REVIEW AND NOT INTENDED FOR CONSTRUCTION BIDDING, OR PERMIT PURPOSES.
MARTIN PALACIOS, PE
111619
TEXAS SERIAL NO.
2/22/2017
DATE

BEXAR COUNTY
PUBLIC WORKS DEPARTMENT

CP&Y
T.B.P.E. FIRM # 1741

RPS klotz associates
7550 IH-10, Northwest Center, Suite 300, San Antonio, Texas 78229
T 210.736.0425 • email@klotz.com • Texas PE Firm Reg. #F-929

TALLEY ROAD

SIGNING AND PAVEMENT MARKING LAYOUTS

PROJECT NUMBER:			SHEET NO.
0849-01-046			445
DESIGNED BY:	MP	ROADWAY/HIGHWAY:	
CHECKED BY:	SN	TALLEY ROAD	
DRAWN BY:	MP	STATE	COUNTY
CHECKED BY:	SN	TEXAS	BEXAR

SHEET 1 OF 14

cpybw_ANSIB.tbl
cpypdf_ANSIB.pltcfg
pw:/Active Projects/BEXA14048.01/8.00 Plans and Drawings/8.30 Cut Sheets/8.3.12 Signing and Striping/14048SIGN01.dgn
2/22/2017 10:03:05 AM martin.palacios

CP&Y
CHECKPRINT

REVIEWER
Initial:
Date:
VERIFIED
Initial:
Date:
PROCESSED
Initial:
Date:
VERIFIED
Initial:
Date:

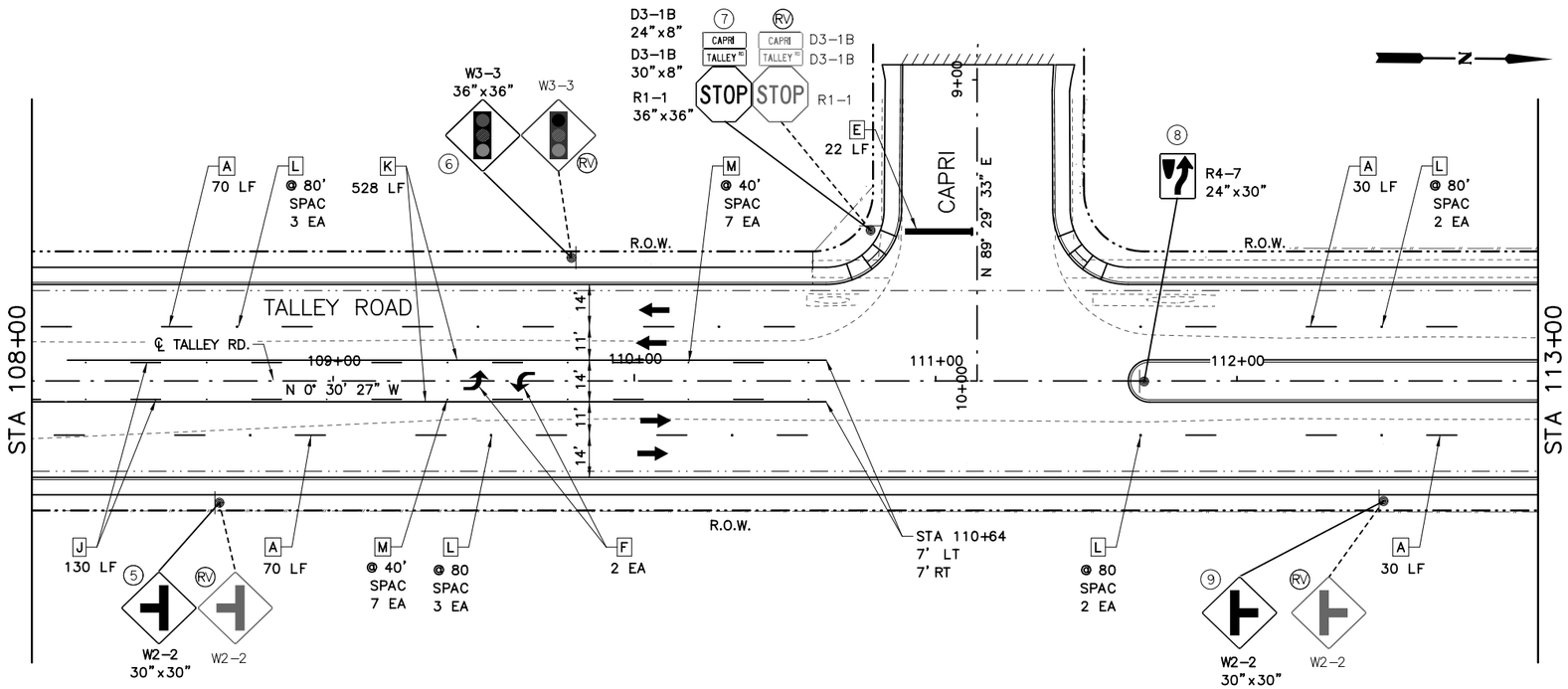

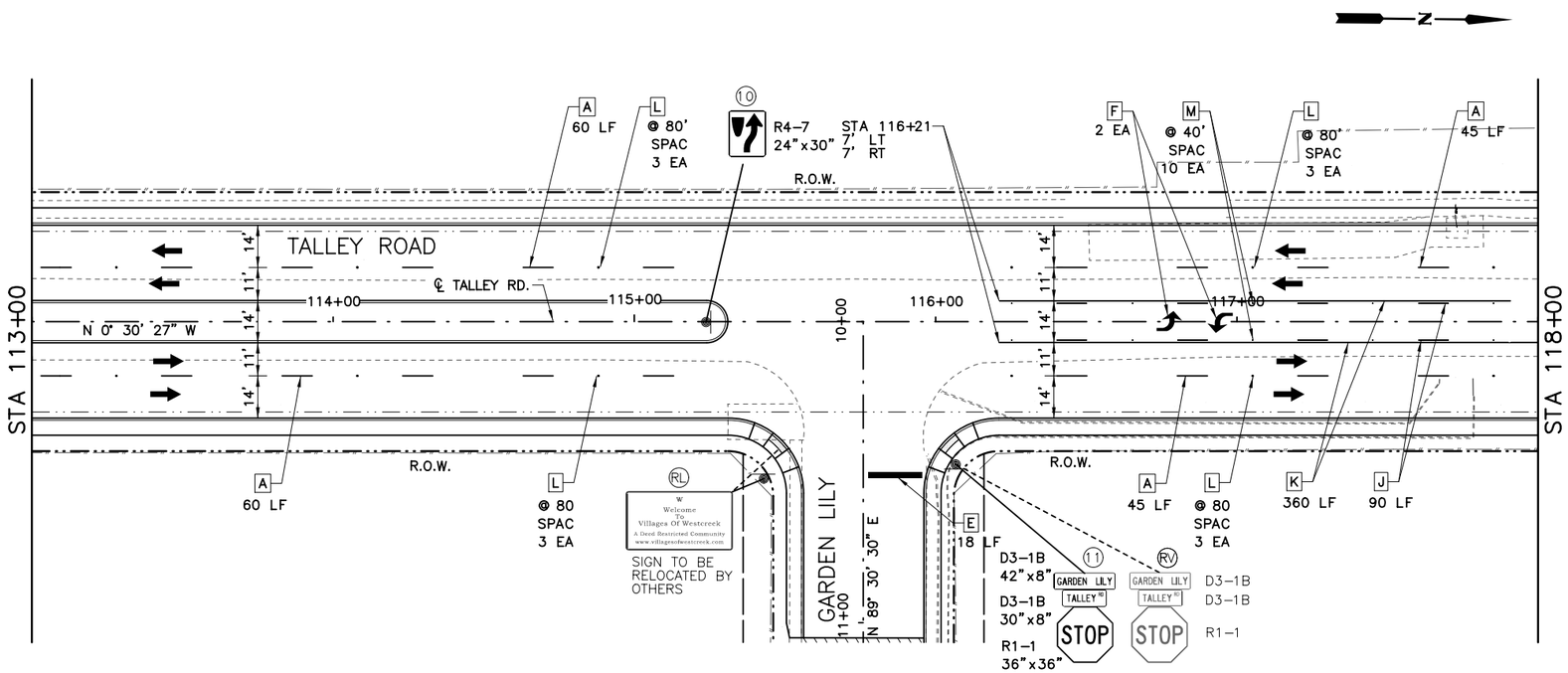

25 12.5 0 25 50
SCALE FEET

LEGEND:

- A RE PM W/RET REQ TY I (W)4"(BRK)(100MIL)
- B RE PM W/RET REQ TY I (W)4"(SLD)(100MIL)
- C REFL PAV MRK TY I (W)8"(SLD)(100MIL)
- D REFL PAV MRK TY I (W)12"(SLD)(100MIL)
- E REFL PAV MRK TY I (W)24"(SLD)(100MIL)
- F REFL PAV MRK TY I (W)(ARROW)(100MIL)
- G REFL PAV MRK TY I (W)(WORD)(100MIL)
- H REFL PAV MRK TY I (W)(BIKE ARW)(100MIL)
- I REFL PAV MRK TY I (W)(BIKE SYML)(100MIL)
- J RE PM W/RET REQ TY I (Y)4"(BRK)(100MIL)
- K RE PM W/RET REQ TY I (Y)4"(SLD)(100MIL)
- L REFL PAV MRKR TY I-C
- M REFL PAV MRKR TY II-A-A
- N REFL PAV MRKR TY I (Y)24")(SLD)(100MIL)
- O REFL PAV MRKR TY I (Y)MED NOSE(100MIL)

OBJECT MARKER — DELINEATOR
DIRECTION OF TRAFFIC — SIGN POST
(1) PROPOSED SIGN
(RV) EXISTING SIGN TO BE REMOVED
(RM) EXISTING SIGN TO REMAIN
(RL) EXISTING SIGN TO BE RELOCATED

90% SUBMITTAL

DOCUMENT IS FOR INTERIM REVIEW AND NOT INTENDED FOR CONSTRUCTION BIDDING, OR PERMIT PURPOSES.
MARTIN PALACIOS, PE
111619
TEXAS SERIAL NO.
2/22/2017
DATE

BEXAR COUNTY
PUBLIC WORKS DEPARTMENT

CP&Y
T.B.P.E. FIRM # 1741

RPS klotz associates
7550 IH-10, Northwest Center, Suite 300, San Antonio, Texas 78229
T 210.736.0425 • email@klotz.com • Texas PE Firm Reg. #F-929

TALLEY ROAD

SIGNING AND PAVEMENT MARKING LAYOUTS

PROJECT NUMBER:			SHEET NO.
0849-01-046			446
DESIGNED BY:	MP	ROADWAY/HIGHWAY:	
CHECKED BY:	SN	TALLEY ROAD	
DRAWN BY:	MP	STATE	COUNTY
CHECKED BY:	SN	TEXAS	BEXAR

SHEET 2 OF 14

cpybw_ANSIB.tbl
cpypdf_ANSIB.pltcfg
pw:/Active Projects/BEXA14048.01/8.00 Plans and Drawings/8.30 Cut Sheets/8.3.12 Signing and Striping/14048SIGN02.dgn
2/22/2017 10:03:10 AM martin.palacios

CP&Y
CHECKPRINT

REVIEWER
Initial:
Date:
VERIFIED
Initial:
Date:
PROCESSED
Initial:
Date:
VERIFIED
Initial:
Date:

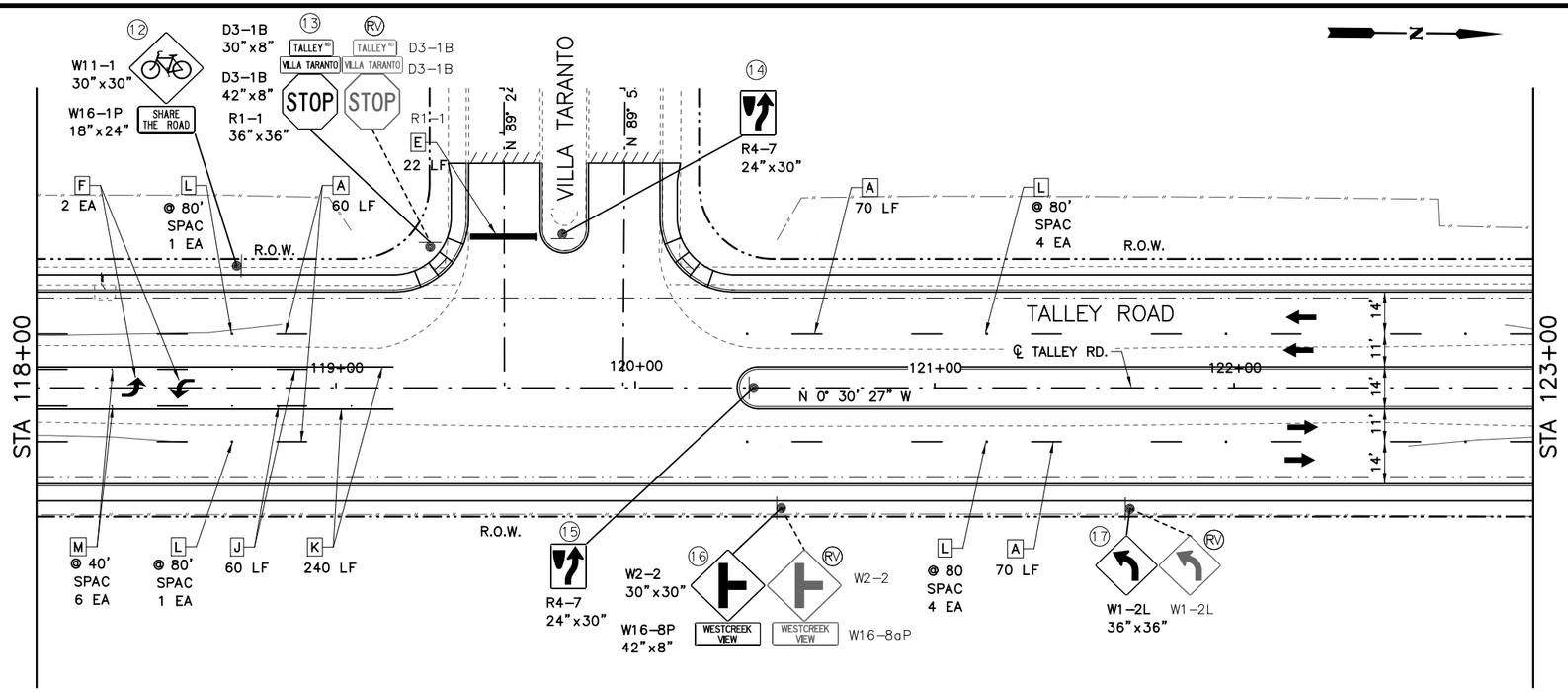

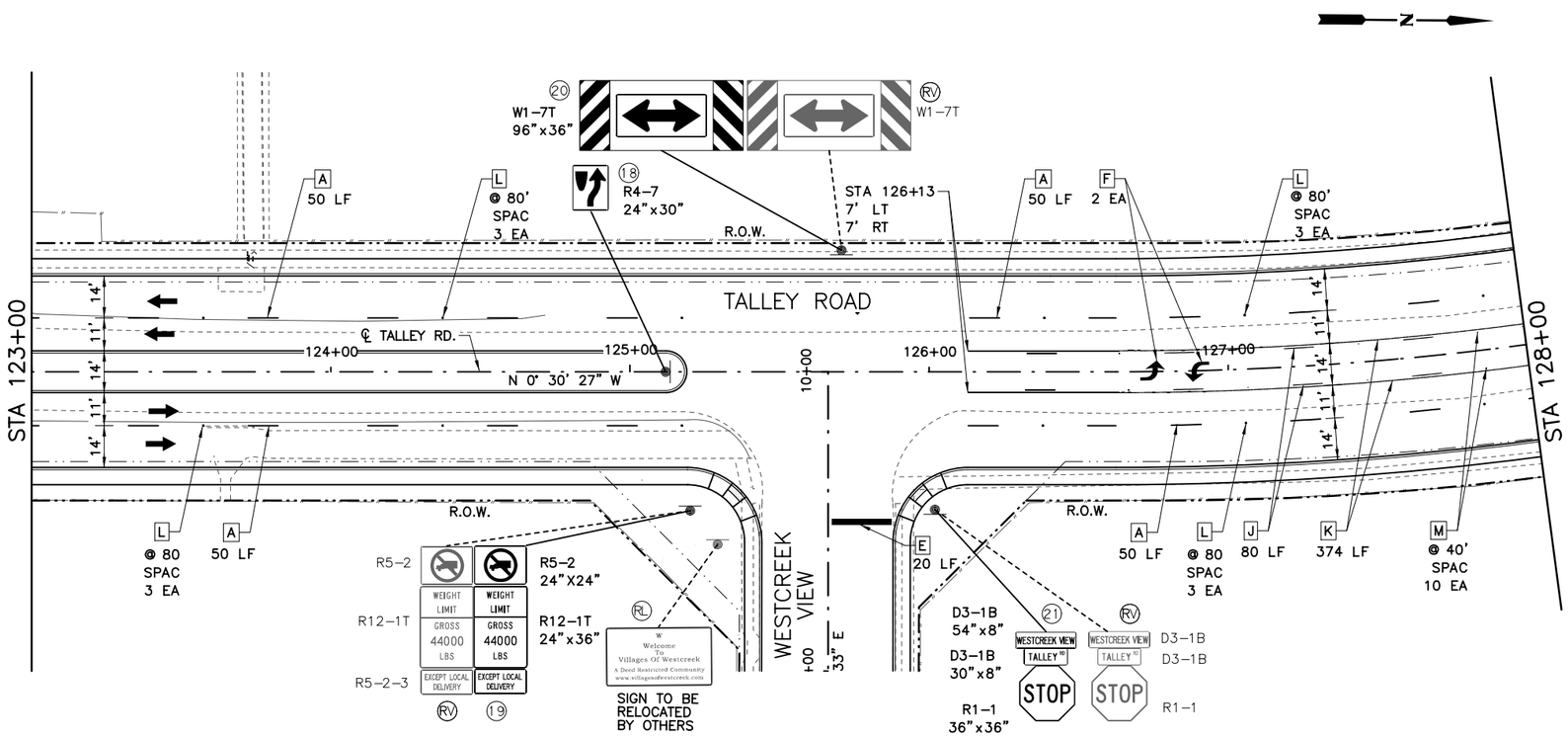

25 12.5 0 25 50
SCALE FEET

LEGEND:

A	RE PM W/RET REQ TY I (W)4"(BRK)(100MIL)
B	RE PM W/RET REQ TY I (W)4"(SLD)(100MIL)
C	REFL PAV MRK TY I (W)8"(SLD)(100MIL)
D	REFL PAV MRK TY I (W)12"(SLD)(100MIL)
E	REFL PAV MRK TY I (W)24"(SLD)(100MIL)
F	REFL PAV MRK TY I (W)(ARROW)(100MIL)
G	REFL PAV MRK TY I (W)(WORD)(100MIL)
H	REFL PAV MRK TY I (W)(BIKE ARW)(100MIL)
I	REFL PAV MRK TY I (W)(BIKE SYML)(100MIL)
J	RE PM W/RET REQ TY I (Y)4"(BRK)(100MIL)
K	RE PM W/RET REQ TY I (Y)4"(SLD)(100MIL)
L	REFL PAV MRKR TY I-C
M	REFL PAV MRKR TY II-A-A
N	REFL PAV MRKR TY I (Y)24")(SLD)(100MIL)
O	REFL PAV MRKR TY I (Y)MED NOSE(100MIL)

OBJECT MARKER — DELINEATOR
DIRECTION OF TRAFFIC — SIGN POST
(1) PROPOSED SIGN
(RV) EXISTING SIGN TO BE REMOVED
(RM) EXISTING SIGN TO REMAIN
(RL) EXISTING SIGN TO BE RELOCATED

90% SUBMITTAL

DOCUMENT IS FOR INTERIM REVIEW AND NOT INTENDED FOR CONSTRUCTION BIDDING, OR PERMIT PURPOSES.
MARTIN PALACIOS, PE
111619
TEXAS SERIAL NO.
2/22/2017
DATE

BEXAR COUNTY
PUBLIC WORKS DEPARTMENT

CP&Y
T.B.P.E. FIRM # 1741

RPS klotz associates
7550 IH-10, Northwest Center, Suite 300, San Antonio, Texas 78229
T 210.736.0425 • email@klotz.com • Texas PE Firm Reg. #F-929

TALLEY ROAD

SIGNING AND PAVEMENT MARKING LAYOUTS

PROJECT NUMBER:			SHEET NO.
0849-01-046			447
DESIGNED BY:	MP	ROADWAY/HIGHWAY:	
CHECKED BY:	SN	TALLEY ROAD	
DRAWN BY:	MP	STATE	COUNTY
CHECKED BY:	SN	TEXAS	BEXAR

SHEET 3 OF 14

cpybw_ANSIB.tbl
cpypdf_ANSIB.pltcfg
pw:/Active Projects/BEXA14048.01/8.00 Plans and Drawings/8.30 Cut Sheets/8.3.12 Signing and Striping/14048SIGN03.dgn
2/22/2017 10:03:22 AM martin.palacios

CP&Y
CHECKPRINT

REVIEWER
Initial:
Date:
VERIFIED
Initial:
Date:
PROCESSED
Initial:
Date:
VERIFIED
Initial:
Date:

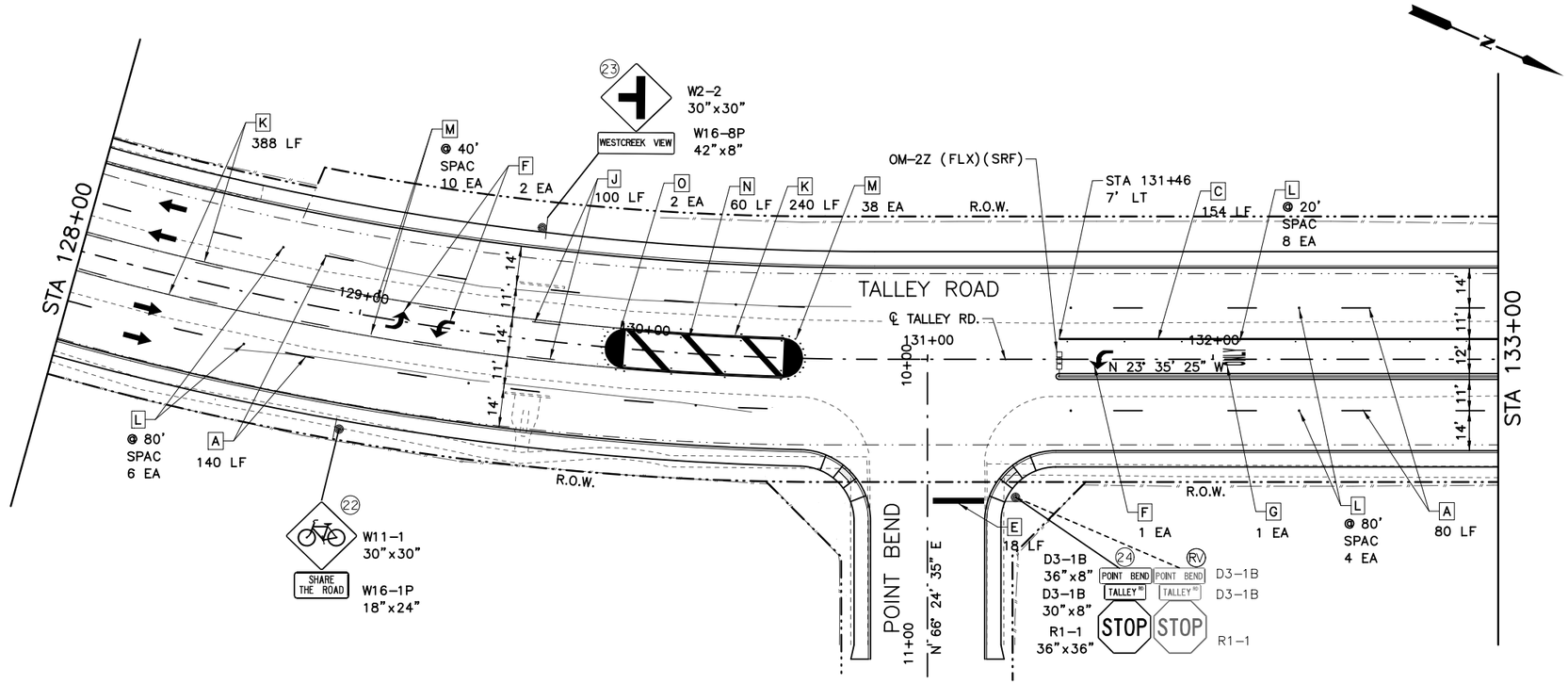

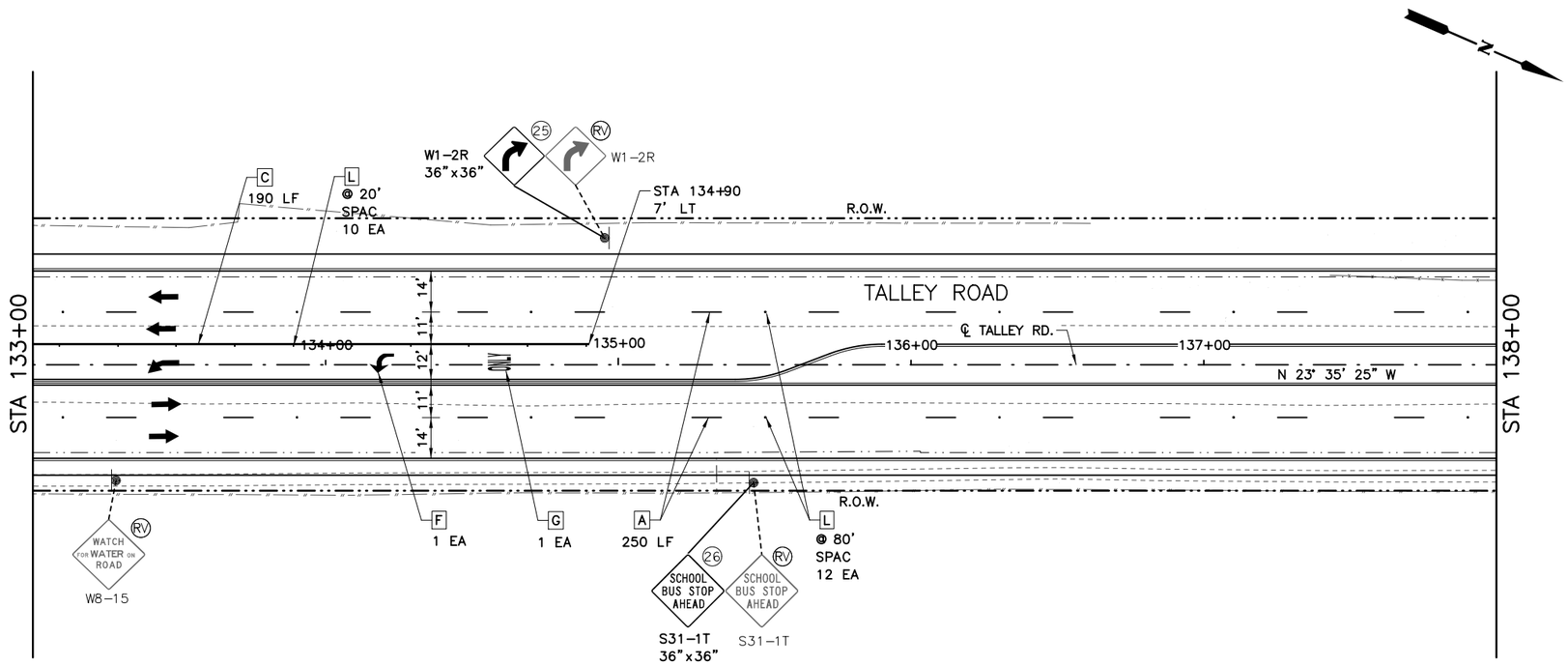

25 12.5 0 25 50
SCALE FEET

LEGEND:

- A RE PM W/RET REQ TY I (W)4"(BRK)(100MIL)
- B RE PM W/RET REQ TY I (W)4"(SLD)(100MIL)
- C REFL PAV MRK TY I (W)8"(SLD)(100MIL)
- D REFL PAV MRK TY I (W)12"(SLD)(100MIL)
- E REFL PAV MRK TY I (W)24"(SLD)(100MIL)
- F REFL PAV MRK TY I (W)(ARROW)(100MIL)
- G REFL PAV MRK TY I (W)(WORD)(100MIL)
- H REFL PAV MRK TY I (W)(BIKE ARW)(100MIL)
- I REFL PAV MRK TY I (W)(BIKE SYML)(100MIL)
- J RE PM W/RET REQ TY I (Y)4"(BRK)(100MIL)
- K RE PM W/RET REQ TY I (Y)4"(SLD)(100MIL)
- L REFL PAV MRKR TY I-C
- M REFL PAV MRKR TY II-A-A
- N REFL PAV MRKR TY I (Y)24")(SLD)(100MIL)
- O REFL PAV MRKR TY I (Y)MED NOSE(100MIL)
- OBJECT MARKER
- DELINEATOR
- DIRECTION OF TRAFFIC
- SIGN POST
- (1) PROPOSED SIGN
- (RV) EXISTING SIGN TO BE REMOVED
- (RM) EXISTING SIGN TO REMAIN
- (RL) EXISTING SIGN TO BE RELOCATED

90% SUBMITTAL

DOCUMENT IS FOR INTERIM REVIEW AND NOT INTENDED FOR CONSTRUCTION BIDDING, OR PERMIT PURPOSES.

MARTIN PALACIOS, PE
111619
TEXAS SERIAL NO.
2/22/2017
DATE

BEXAR COUNTY
PUBLIC WORKS DEPARTMENT

CP&Y
T.B.P.E. FIRM # 1741

RPS klotz associates
7550 IH-10, Northwest Center, Suite 300, San Antonio, Texas 78229
T 210.736.0425 • email@klotz.com • Texas PE Firm Reg. #F-929

TALLEY ROAD

SIGNING AND PAVEMENT MARKING LAYOUTS

PROJECT NUMBER:			SHEET NO.
0849-01-046			448
DESIGNED BY:	MP	ROADWAY/HIGHWAY:	
CHECKED BY:	SN	TALLEY ROAD	
DRAWN BY:	MP	STATE	COUNTY
CHECKED BY:	SN	TEXAS	BEXAR

SHEET 4 OF 14

cpybw_ANSIB.tbl
cpypdf_ANSIB.pltcfg
pw:/Active Projects/BEXA14048.01/8.00 Plans and Drawings/8.30 Cut Sheets/8.3.12 Signing and Striping/14048SIGN04.dgn
2/22/2017 10:03:27 AM martin.palacios

CP&Y CHECKPRINT

REVIEWER
Initial:
Date:
VERIFIED
Initial:
Date:
PROCESSED
Initial:
Date:
VERIFIED
Initial:
Date:

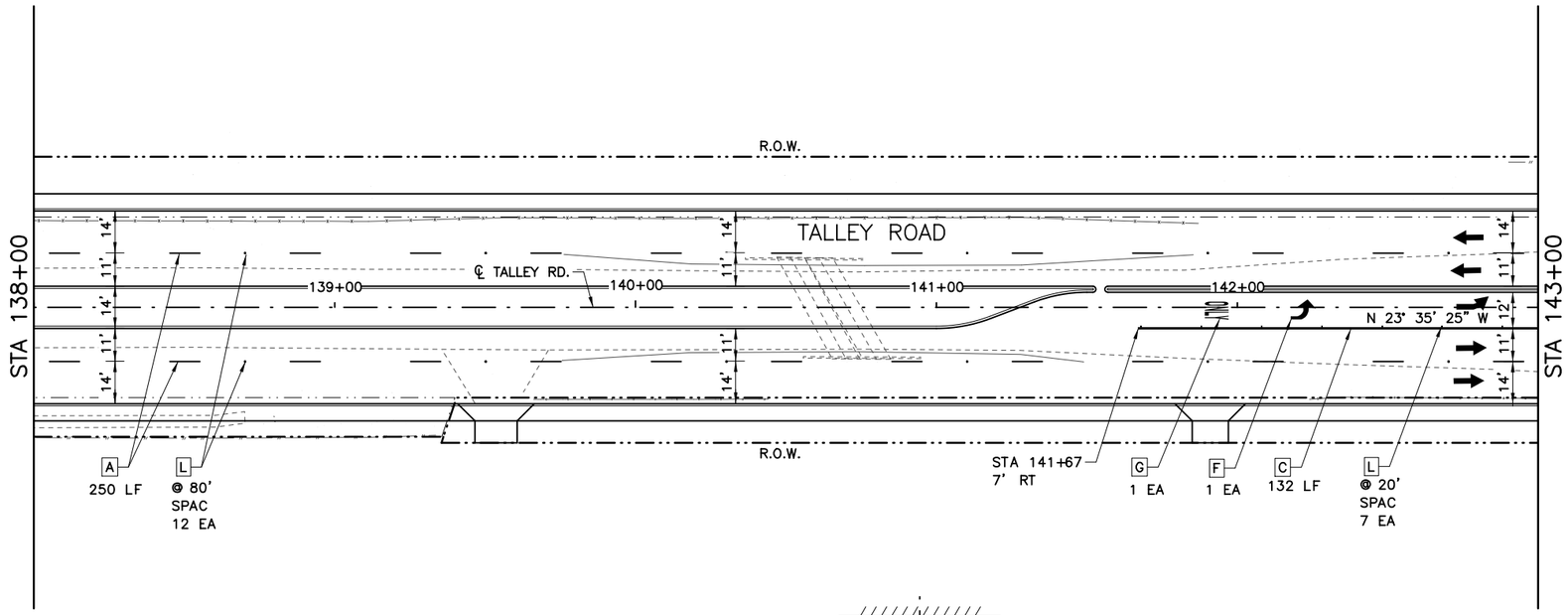

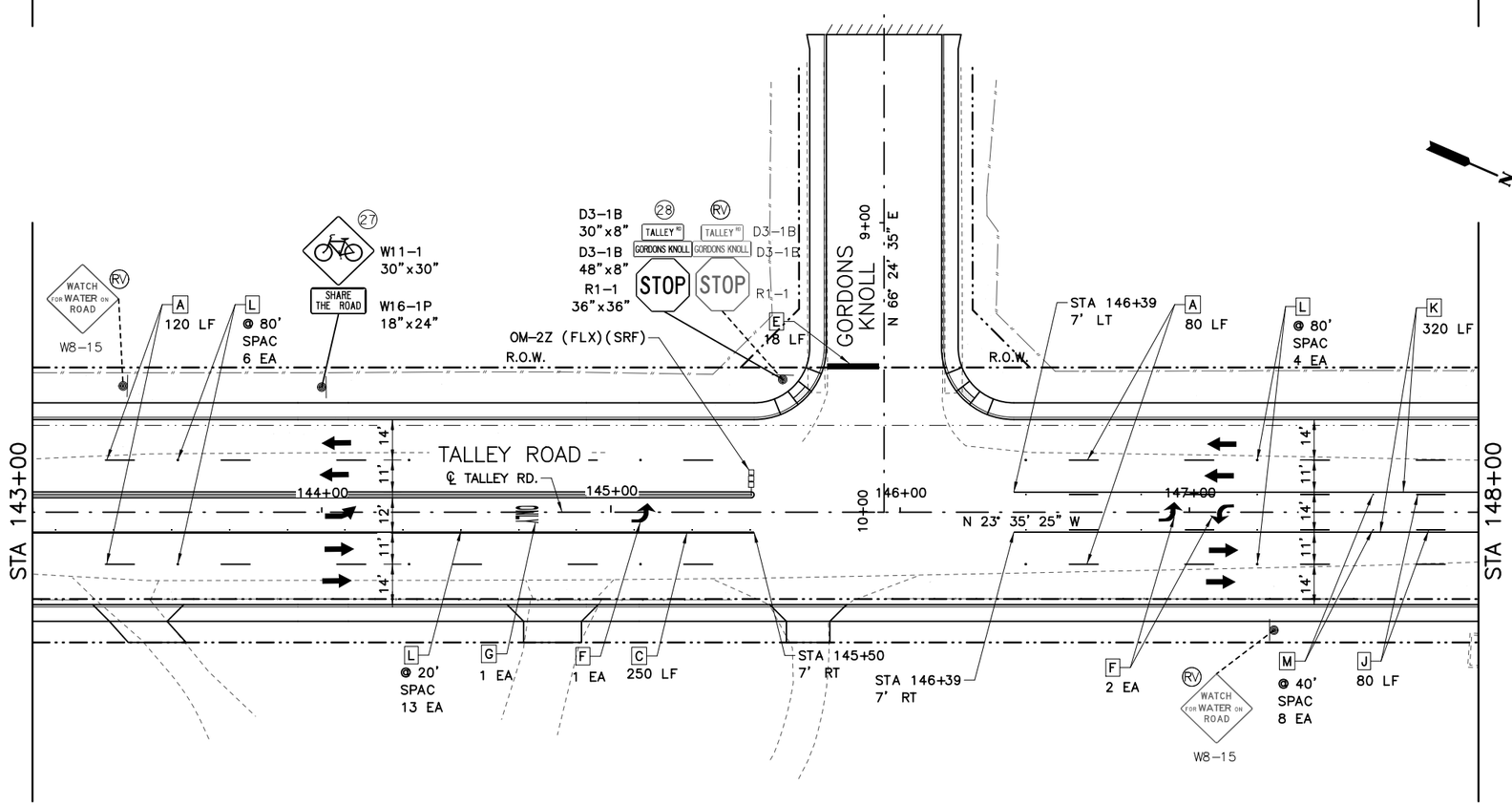

25 12.5 0 25 50
SCALE FEET

LEGEND:

- A RE PM W/RET REQ TY I (W)4"(BRK)(100MIL)
- B RE PM W/RET REQ TY I (W)4"(SLD)(100MIL)
- C REFL PAV MRK TY I (W)8"(SLD)(100MIL)
- D REFL PAV MRK TY I (W)12"(SLD)(100MIL)
- E REFL PAV MRK TY I (W)24"(SLD)(100MIL)
- F REFL PAV MRK TY I (W)(ARROW)(100MIL)
- G REFL PAV MRK TY I (W)(WORD)(100MIL)
- H REFL PAV MRK TY I (W)(BIKE ARW)(100MIL)
- I REFL PAV MRK TY I (W)(BIKE SYML)(100MIL)
- J RE PM W/RET REQ TY I (Y)4"(BRK)(100MIL)
- K RE PM W/RET REQ TY I (Y)4"(SLD)(100MIL)
- L REFL PAV MRKR TY I-C
- M REFL PAV MRKR TY II-A-A
- N REFL PAV MRKR TY I (Y)24")(SLD)(100MIL)
- O REFL PAV MRKR TY I (Y)MED NOSE(100MIL)

OBJECT MARKER — DELINEATOR
DIRECTION OF TRAFFIC — SIGN POST
(1) PROPOSED SIGN
(RV) EXISTING SIGN TO BE REMOVED
(RM) EXISTING SIGN TO REMAIN
(RL) EXISTING SIGN TO BE RELOCATED

90% SUBMITTAL

DOCUMENT IS FOR INTERIM REVIEW AND NOT INTENDED FOR CONSTRUCTION BIDDING, OR PERMIT PURPOSES.

MARTIN PALACIOS, PE
111619
TEXAS SERIAL NO.
2/22/2017
DATE

BEXAR COUNTY
PUBLIC WORKS DEPARTMENT

CP&Y
T.B.P.E. FIRM # 1741

RPS klotz associates
7550 IH-10, Northwest Center, Suite 300, San Antonio, Texas 78229
T 210.736.0425 • email@klotz.com • Texas PE Firm Reg. #F-929

TALLEY ROAD

SIGNING AND PAVEMENT MARKING LAYOUTS

PROJECT NUMBER:		SHEET NO.
0849-01-046		449
DESIGNED BY: MP	ROADWAY/HIGHWAY:	
CHECKED BY: SN	TALLEY ROAD	
DRAWN BY: MP	STATE	COUNTY
CHECKED BY: SN	TEXAS	BEXAR

SHEET 5 OF 14

2/22/2017 10:03:31 AM martin.palacios cpybw_ANSIB.tbl cpypdf_ANSIB.pltcfg pw:/Active Projects/BEXA14048.01/8.00 Plans and Drawings/8.30 Cut Sheets/8.3.12 Signing and Striping/14048SIGN05.dgn

CP&Y
CHECKPRINT

REVIEWER
Initial:
Date:
VERIFIED
Initial:
Date:
PROCESSED
Initial:
Date:
VERIFIED
Initial:
Date:

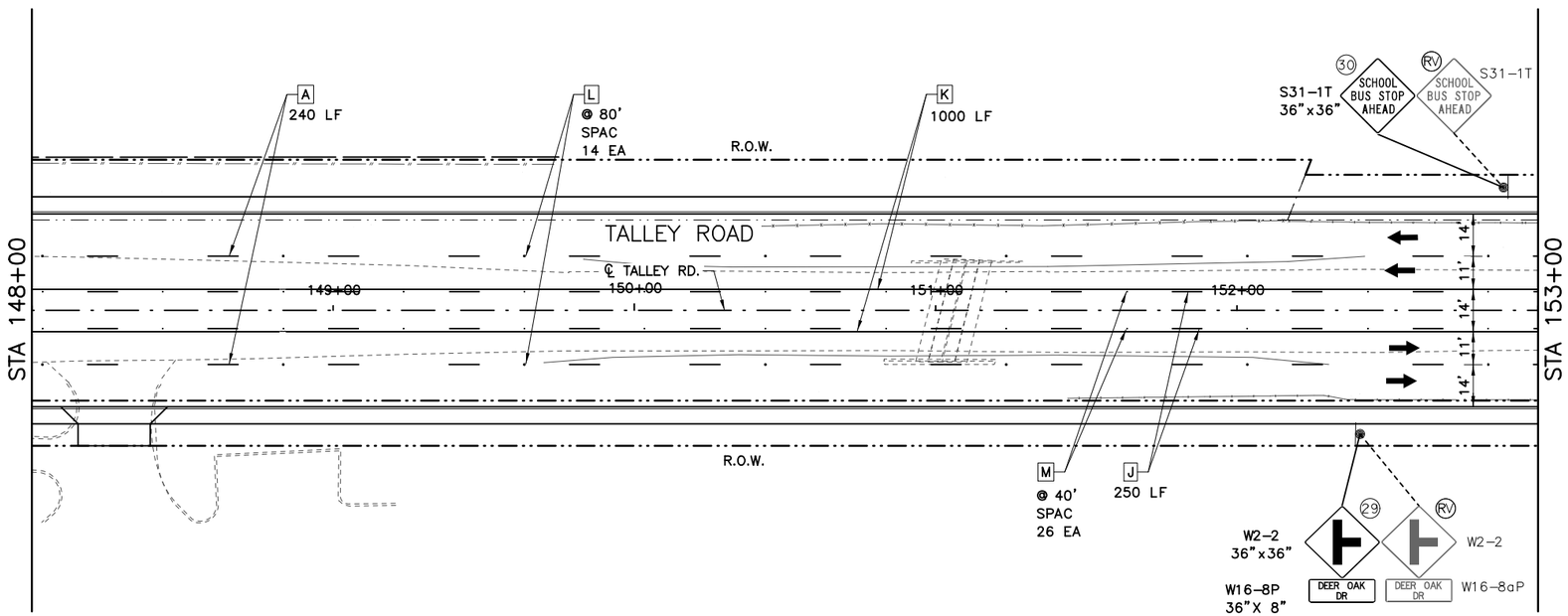

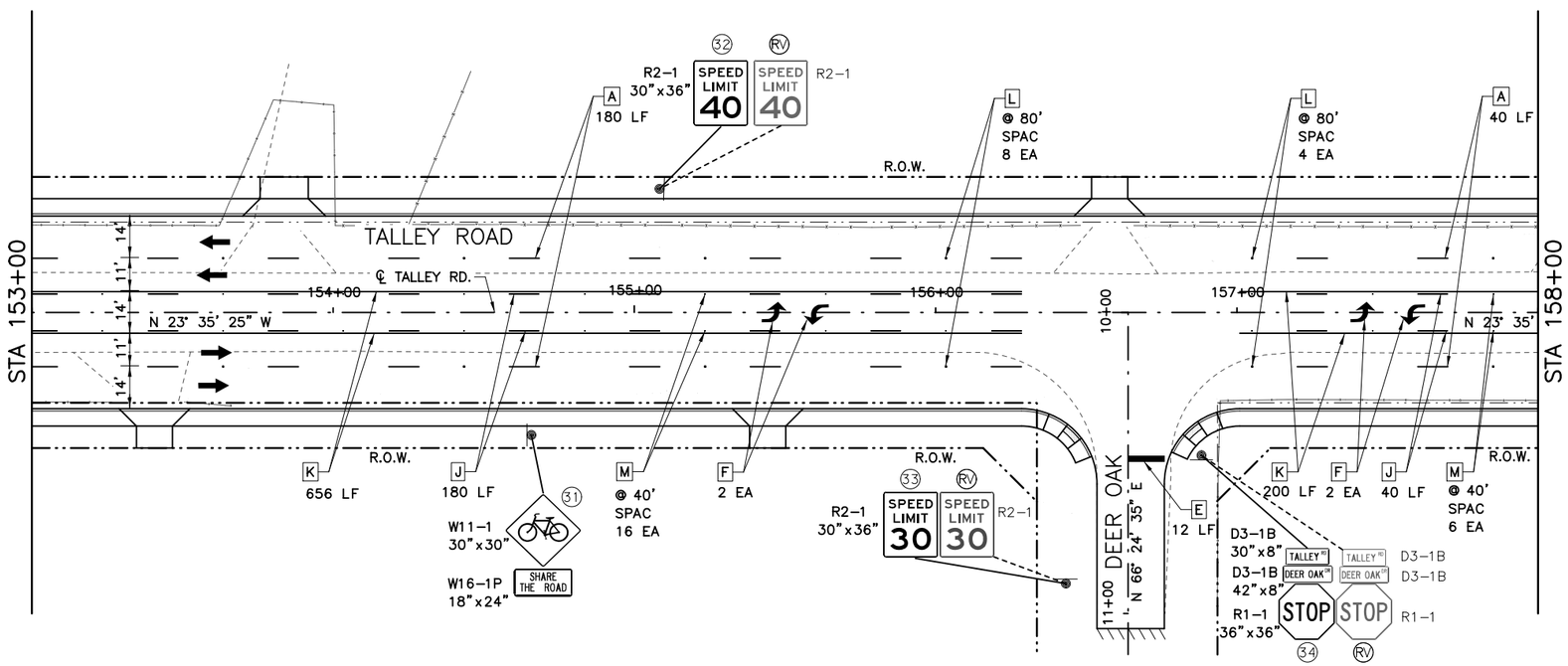

25 12.5 0 25 50
SCALE FEET

LEGEND:

- A RE PM W/RET REQ TY I (W)4"(BRK)(100MIL)
- B RE PM W/RET REQ TY I (W)4"(SLD)(100MIL)
- C REFL PAV MRK TY I (W)8"(SLD)(100MIL)
- D REFL PAV MRK TY I (W)12"(SLD)(100MIL)
- E REFL PAV MRK TY I (W)24"(SLD)(100MIL)
- F REFL PAV MRK TY I (W)(ARROW)(100MIL)
- G REFL PAV MRK TY I (W)(WORD)(100MIL)
- H REFL PAV MRK TY I (W)(BIKE ARW)(100MIL)
- I REFL PAV MRK TY I (W)(BIKE SYML)(100MIL)
- J RE PM W/RET REQ TY I (Y)4"(BRK)(100MIL)
- K RE PM W/RET REQ TY I (Y)4"(SLD)(100MIL)
- L REFL PAV MRKR TY I-C
- M REFL PAV MRKR TY II-A-A
- N REFL PAV MRKR TY I (Y)24")(SLD)(100MIL)
- O REFL PAV MRKR TY I (Y)MED NOSE(100MIL)

OBJECT MARKER — DELINEATOR
DIRECTION OF TRAFFIC — SIGN POST
(1) PROPOSED SIGN
(RV) EXISTING SIGN TO BE REMOVED
(RM) EXISTING SIGN TO REMAIN
(RL) EXISTING SIGN TO BE RELOCATED

90% SUBMITTAL

DOCUMENT IS FOR INTERIM REVIEW AND NOT INTENDED FOR CONSTRUCTION BIDDING, OR PERMIT PURPOSES.
MARTIN PALACIOS, PE
111619
TEXAS SERIAL NO.
2/22/2017
DATE

BEXAR COUNTY
PUBLIC WORKS DEPARTMENT

CP&Y
T.B.P.E. FIRM # 1741

RPS klotz associates
7550 IH-10, Northwest Center, Suite 300, San Antonio, Texas 78229
T 210.736.0425 • email@klotz.com • Texas PE Firm Reg. #F-929

TALLEY ROAD

SIGNING AND PAVEMENT MARKING LAYOUTS

PROJECT NUMBER:			SHEET NO.
0849-01-046			450
DESIGNED BY:	MP	ROADWAY/HIGHWAY:	
CHECKED BY:	SN	TALLEY ROAD	
DRAWN BY:	MP	STATE	COUNTY
CHECKED BY:	SN	TEXAS	BEXAR

SHEET 6 OF 14

cpybw_ANSIB.tbl
cpypdf_ANSIB.pltcfg
pw:/Active Projects/BEXA14048.01/8.00 Plans and Drawings/8.30 Cut Sheets/8.3.12 Signing and Striping/14048SIGN06.dgn
2/22/2017 10:03:36 AM martin.palacios

CP&Y
CHECKPRINT

REVIEWER
Initial:
Date:
VERIFIED
Initial:
Date:
PROCESSED
Initial:
Date:
VERIFIED
Initial:
Date:

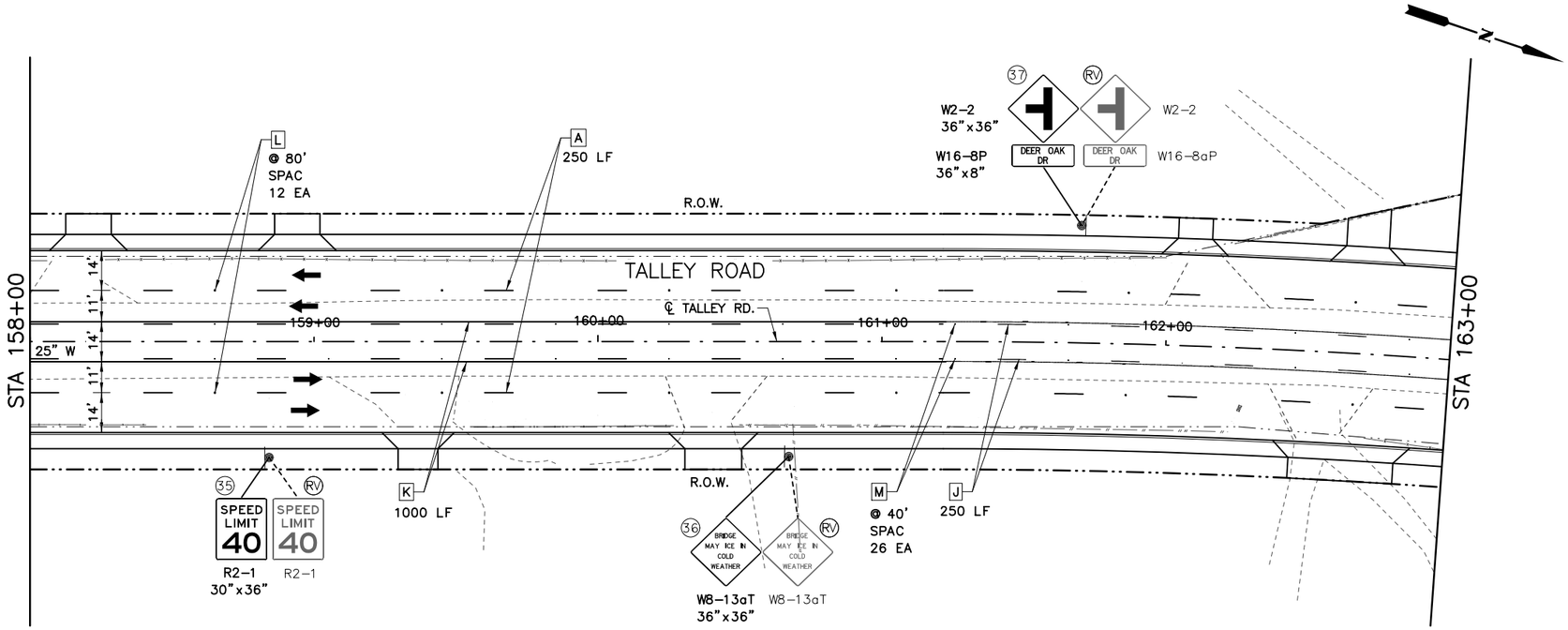

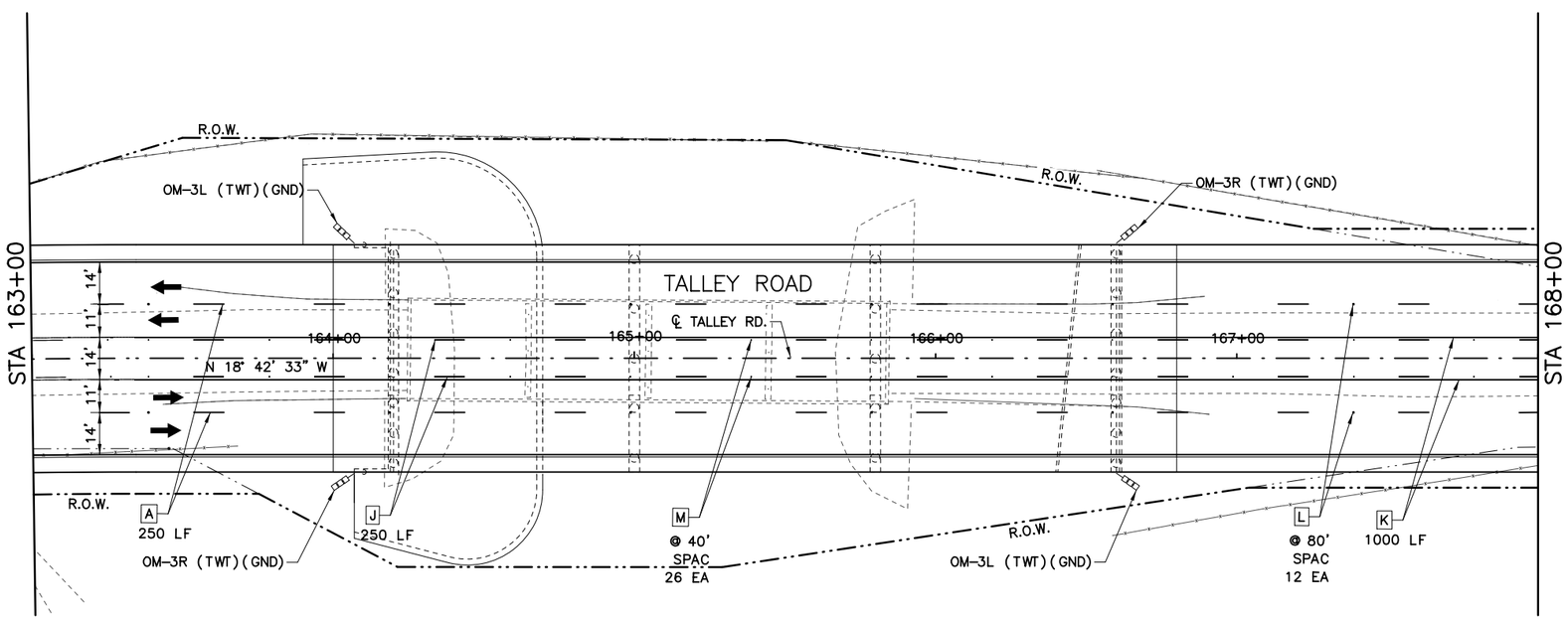

25 12.5 0 25 50
SCALE FEET

LEGEND:

- A RE PM W/RET REQ TY I (W)4"(BRK)(100MIL)
- B RE PM W/RET REQ TY I (W)4"(SLD)(100MIL)
- C REFL PAV MRK TY I (W)8"(SLD)(100MIL)
- D REFL PAV MRK TY I (W)12"(SLD)(100MIL)
- E REFL PAV MRK TY I (W)24"(SLD)(100MIL)
- F REFL PAV MRK TY I (W)(ARROW)(100MIL)
- G REFL PAV MRK TY I (W)(WORD)(100MIL)
- H REFL PAV MRK TY I (W)(BIKE ARW)(100MIL)
- I REFL PAV MRK TY I (W)(BIKE SYML)(100MIL)
- J RE PM W/RET REQ TY I (Y)4"(BRK)(100MIL)
- K RE PM W/RET REQ TY I (Y)4"(SLD)(100MIL)
- L REFL PAV MRKR TY I-C
- M REFL PAV MRKR TY II-A-A
- N REFL PAV MRKR TY I (Y)24")(SLD)(100MIL)
- O REFL PAV MRKR TY I (Y)MED NOSE(100MIL)
- OBJECT MARKER
- DELINEATOR
- DIRECTION OF TRAFFIC
- SIGN POST
- (1) PROPOSED SIGN
- (RV) EXISTING SIGN TO BE REMOVED
- (RM) EXISTING SIGN TO REMAIN
- (RL) EXISTING SIGN TO BE RELOCATED

90% SUBMITTAL

DOCUMENT IS FOR INTERIM REVIEW AND NOT INTENDED FOR CONSTRUCTION BIDDING, OR PERMIT PURPOSES.

MARTIN PALACIOS, PE
111619
TEXAS SERIAL NO.
2/22/2017
DATE

BEXAR COUNTY
PUBLIC WORKS DEPARTMENT

CP&Y
T.B.P.E. FIRM # 1741

RPS klotz associates
7550 IH-10, Northwest Center, Suite 300, San Antonio, Texas 78229
T 210.736.0425 • email@klotz.com • Texas PE Firm Reg. #F-929

TALLEY ROAD

SIGNING AND PAVEMENT MARKING LAYOUTS

PROJECT NUMBER:			SHEET NO.
0849-01-046			451
DESIGNED BY:	MP	ROADWAY/HIGHWAY:	
CHECKED BY:	SN	TALLEY ROAD	
DRAWN BY:	MP	STATE	COUNTY
CHECKED BY:	SN	TEXAS	BEXAR

SHEET 7 OF 14

cpybw_ANSIB.tbl
cpypdf_ANSIB.pltcfg
pw:/Active Projects/BEXA14048.01/8.00 Plans and Drawings/8.30 Cut Sheets/8.3.12 Signing and Striping/14048SIGN07.dgn
2/22/2017 10:03:40 AM martin.palacios

CP&Y
CHECKPRINT

REVIEWER
Initial:
Date:
VERIFIED
Initial:
Date:
PROCESSED
Initial:
Date:
VERIFIED
Initial:
Date:

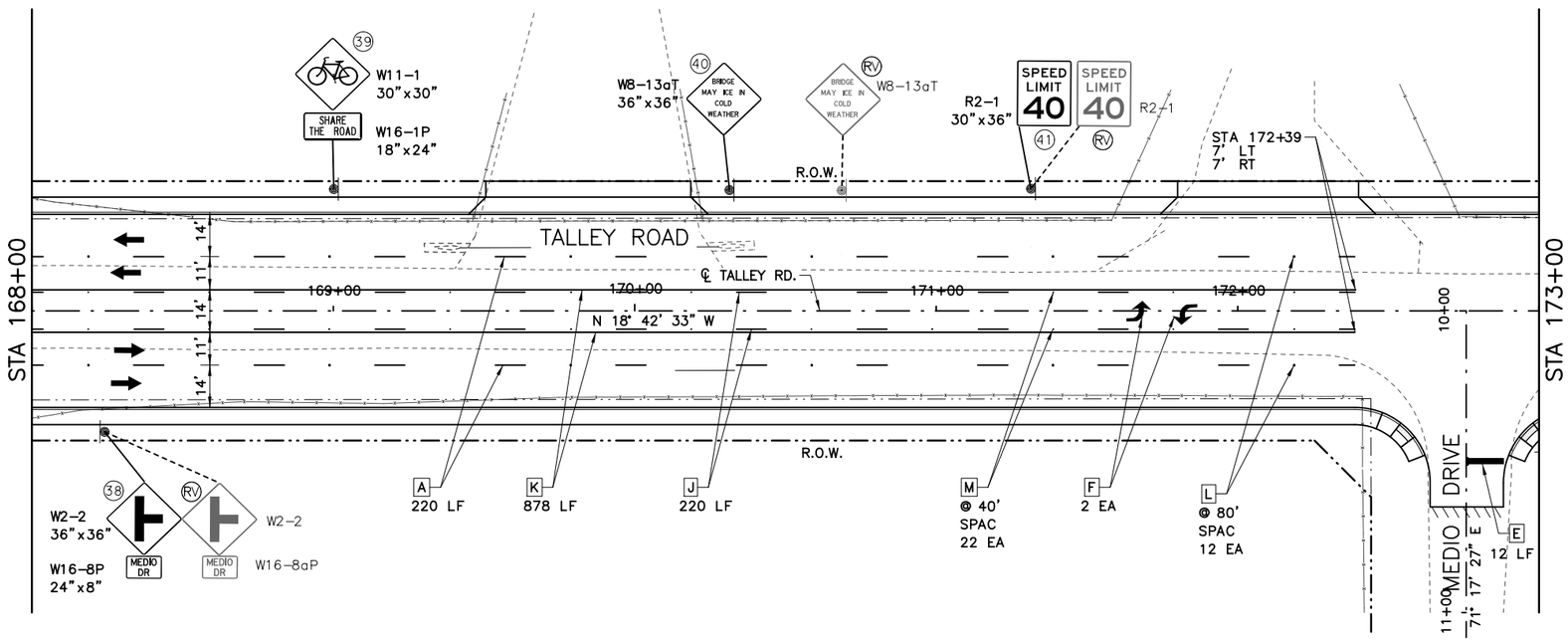

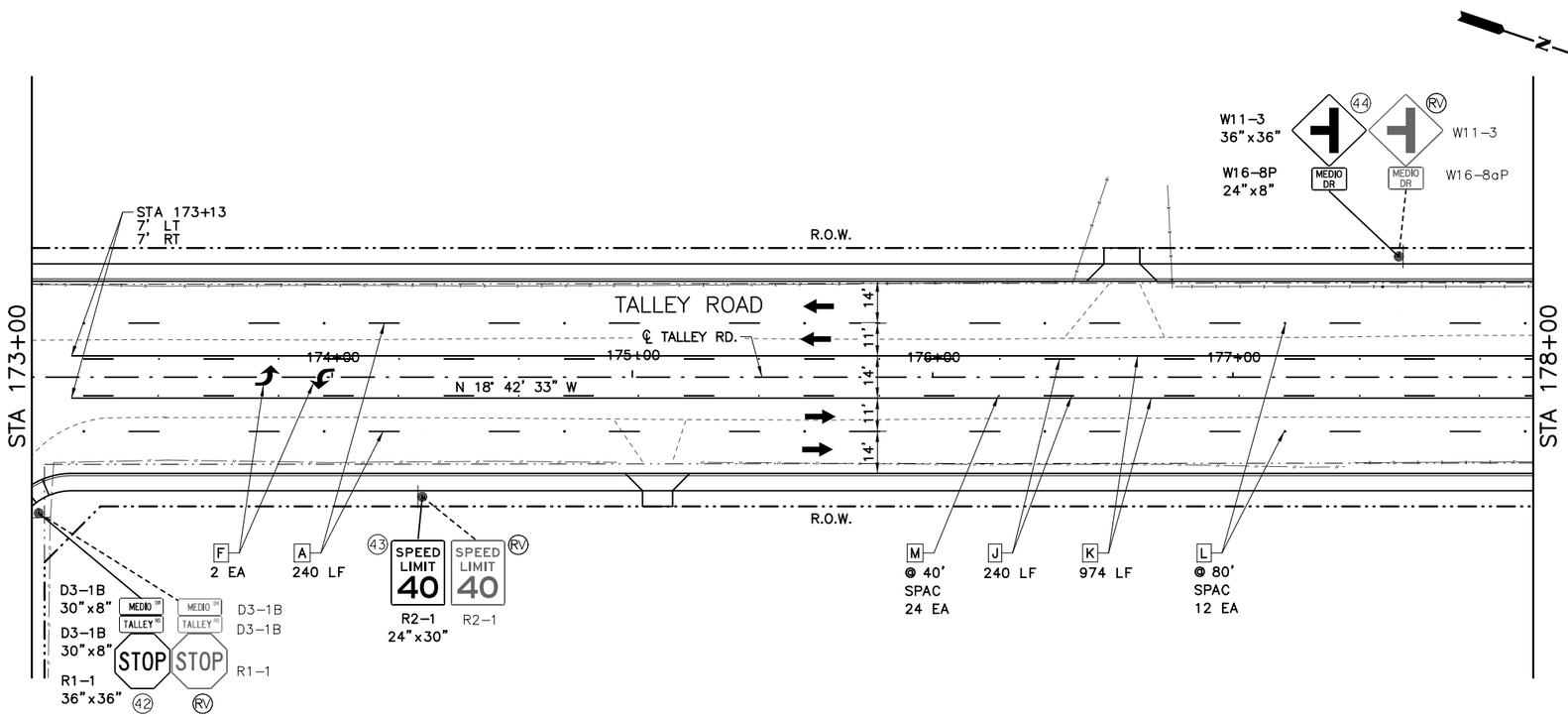

25 12.5 0 25 50
SCALE FEET

LEGEND:

- A RE PM W/RET REQ TY I (W)4"(BRK)(100MIL)
- B RE PM W/RET REQ TY I (W)4"(SLD)(100MIL)
- C REFL PAV MRK TY I (W)8"(SLD)(100MIL)
- D REFL PAV MRK TY I (W)12"(SLD)(100MIL)
- E REFL PAV MRK TY I (W)24"(SLD)(100MIL)
- F REFL PAV MRK TY I (W)(ARROW)(100MIL)
- G REFL PAV MRK TY I (W)(WORD)(100MIL)
- H REFL PAV MRK TY I (W)(BIKE ARW)(100MIL)
- I REFL PAV MRK TY I (W)(BIKE SYML)(100MIL)
- J RE PM W/RET REQ TY I (Y)4"(BRK)(100MIL)
- K RE PM W/RET REQ TY I (Y)4"(SLD)(100MIL)
- L REFL PAV MRKR TY I-C
- M REFL PAV MRKR TY II-A-A
- N REFL PAV MRKR TY I (Y)24")(SLD)(100MIL)
- O REFL PAV MRKR TY I (Y)MED NOSE(100MIL)
- OBJECT MARKER
- DELINEATOR
- DIRECTION OF TRAFFIC
- SIGN POST
- (1) PROPOSED SIGN
- (RV) EXISTING SIGN TO BE REMOVED
- (RM) EXISTING SIGN TO REMAIN
- (RL) EXISTING SIGN TO BE RELOCATED

90% SUBMITTAL

DOCUMENT IS FOR INTERIM REVIEW AND NOT INTENDED FOR CONSTRUCTION BIDDING, OR PERMIT PURPOSES.

MARTIN PALACIOS, PE
111619
TEXAS SERIAL NO.
2/22/2017
DATE

BEXAR COUNTY
PUBLIC WORKS DEPARTMENT

CP&Y
T.B.P.E. FIRM # 1741

RPS klotz associates
7550 IH-10, Northwest Center, Suite 300, San Antonio, Texas 78229
T 210.736.0425 • email@klotz.com • Texas PE Firm Reg. #F-929

TALLEY ROAD

SIGNING AND PAVEMENT MARKING LAYOUTS

PROJECT NUMBER:			SHEET NO.
0849-01-046			452
DESIGNED BY:	MP	ROADWAY/HIGHWAY:	
CHECKED BY:	SN	TALLEY ROAD	
DRAWN BY:	MP	STATE	COUNTY
CHECKED BY:	SN	TEXAS	BEXAR

SHEET 8 OF 14

cpybw_ANSIB.tbl
cpypdf_ANSIB.pltcfg
pw:/Active Projects/BEXA14048.01/8.00 Plans and Drawings/8.30 Cut Sheets/8.3.12 Signing and Striping/14048SIGN08.dgn
2/22/2017 10:03:47 AM martin.palacios

CP&Y
CHECKPRINT

REVIEWER
Initial:
Date:
VERIFIED
Initial:
Date:
PROCESSED
Initial:
Date:
VERIFIED
Initial:
Date:

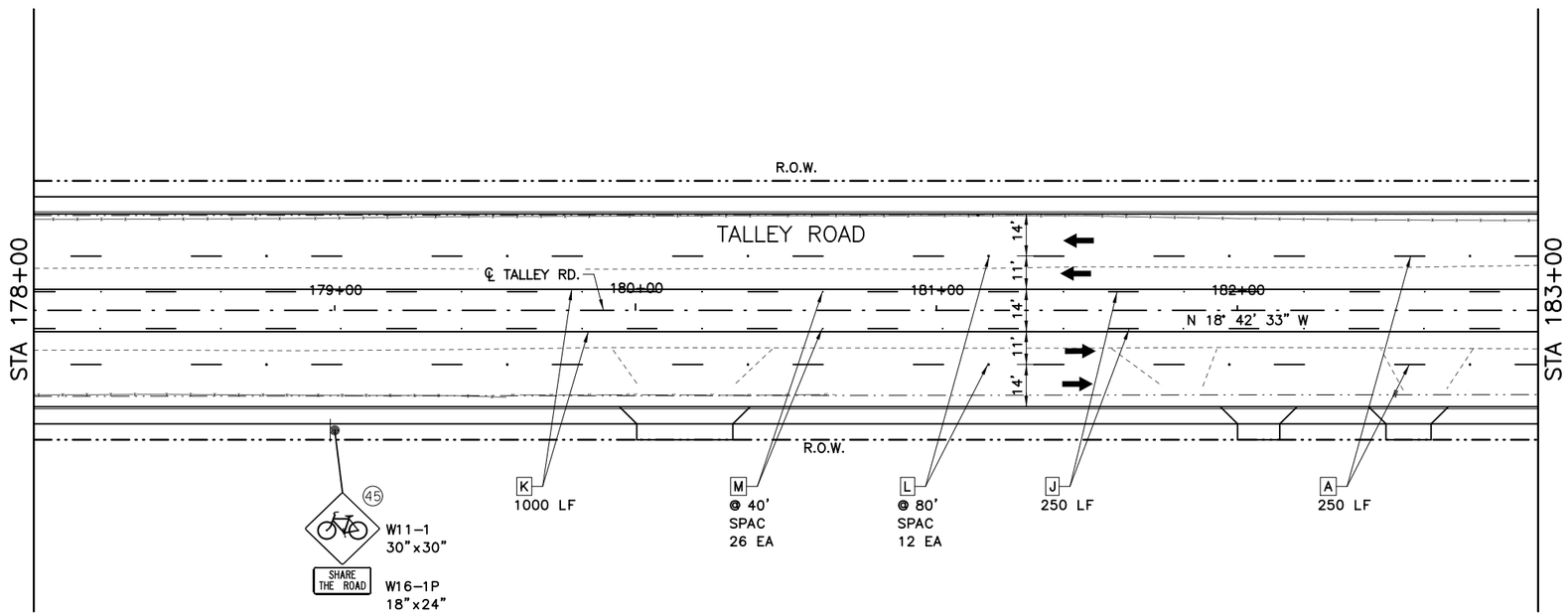

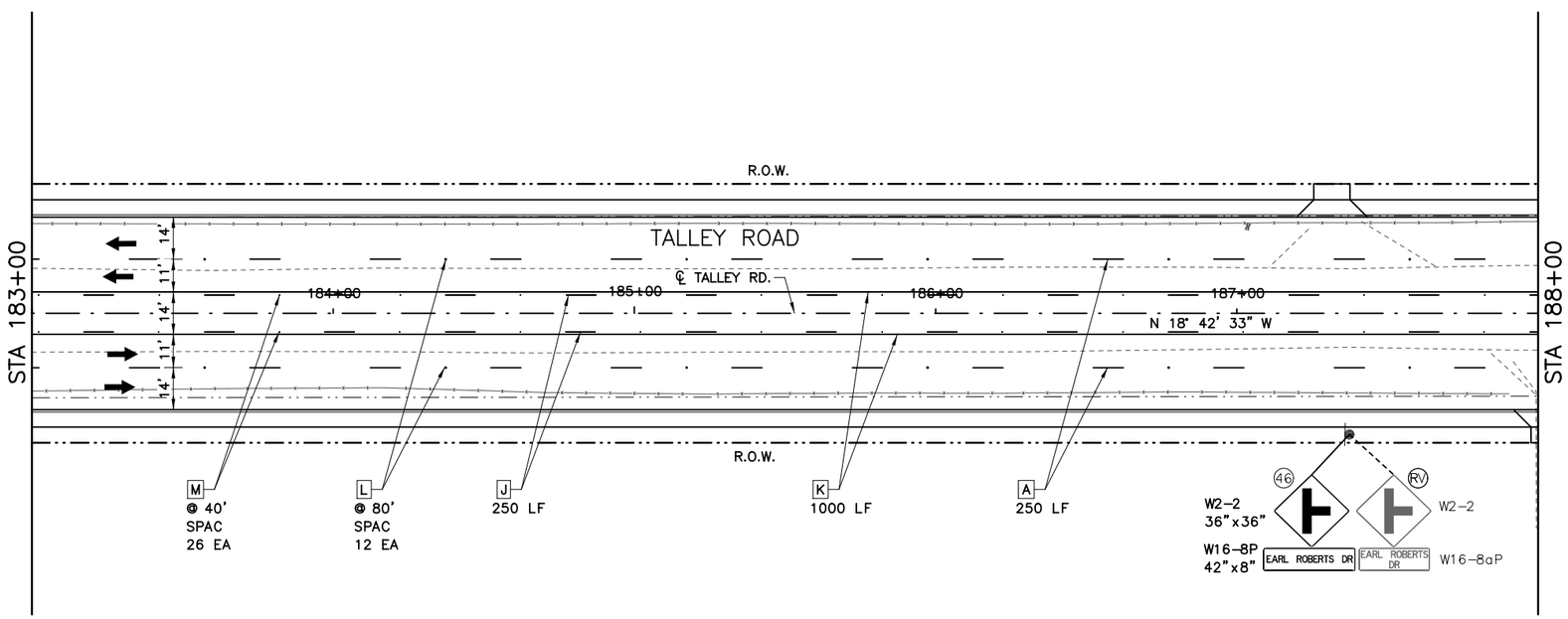

25 12.5 0 25 50
SCALE FEET

LEGEND:

- A RE PM W/RET REQ TY I (W)4"(BRK)(100MIL)
- B RE PM W/RET REQ TY I (W)4"(SLD)(100MIL)
- C REFL PAV MRK TY I (W)8"(SLD)(100MIL)
- D REFL PAV MRK TY I (W)12"(SLD)(100MIL)
- E REFL PAV MRK TY I (W)24"(SLD)(100MIL)
- F REFL PAV MRK TY I (W)(ARROW)(100MIL)
- G REFL PAV MRK TY I (W)(WORD)(100MIL)
- H REFL PAV MRK TY I (W)(BIKE ARW)(100MIL)
- I REFL PAV MRK TY I (W)(BIKE SYML)(100MIL)
- J RE PM W/RET REQ TY I (Y)4"(BRK)(100MIL)
- K RE PM W/RET REQ TY I (Y)4"(SLD)(100MIL)
- L REFL PAV MRKR TY I-C
- M REFL PAV MRKR TY II-A-A
- N REFL PAV MRKR TY I (Y)24")(SLD)(100MIL)
- O REFL PAV MRKR TY I (Y)MED NOSE(100MIL)

OBJECT MARKER — DELINEATOR
DIRECTION OF TRAFFIC — SIGN POST
(1) PROPOSED SIGN
(RV) EXISTING SIGN TO BE REMOVED
(RM) EXISTING SIGN TO REMAIN
(RL) EXISTING SIGN TO BE RELOCATED

90% SUBMITTAL

DOCUMENT IS FOR INTERIM REVIEW AND NOT INTENDED FOR CONSTRUCTION BIDDING, OR PERMIT PURPOSES.

MARTIN PALACIOS, PE
111619
TEXAS SERIAL NO.
2/22/2017
DATE

BEXAR COUNTY
PUBLIC WORKS DEPARTMENT

CP&Y
T.B.P.E. FIRM # 1741

RPS klotz associates
7550 IH-10, Northwest Center, Suite 300, San Antonio, Texas 78229
T 210.736.0425 • email@klotz.com • Texas PE Firm Reg. #F-929

TALLEY ROAD

SIGNING AND PAVEMENT MARKING LAYOUTS

PROJECT NUMBER:			SHEET NO.
0849-01-046			453
DESIGNED BY:	MP	ROADWAY/HIGHWAY:	
CHECKED BY:	SN	TALLEY ROAD	
DRAWN BY:	MP	STATE	COUNTY
CHECKED BY:	SN	TEXAS	BEXAR

SHEET 9 OF 14

cpybw_ANSIB.tbl
cpypdf_ANSIB.pltcfg
pw:/Active Projects/BEXA14048.01/8.00 Plans and Drawings/8.30 Cut Sheets/8.3.12 Signing and Striping/14048SIGN09.dgn
2/22/2017 10:03:55 AM martin.palacios

CP&Y
CHECKPRINT

REVIEWER
Initial:
Date:
VERIFIED
Initial:
Date:
PROCESSED
Initial:
Date:
VERIFIED
Initial:
Date:

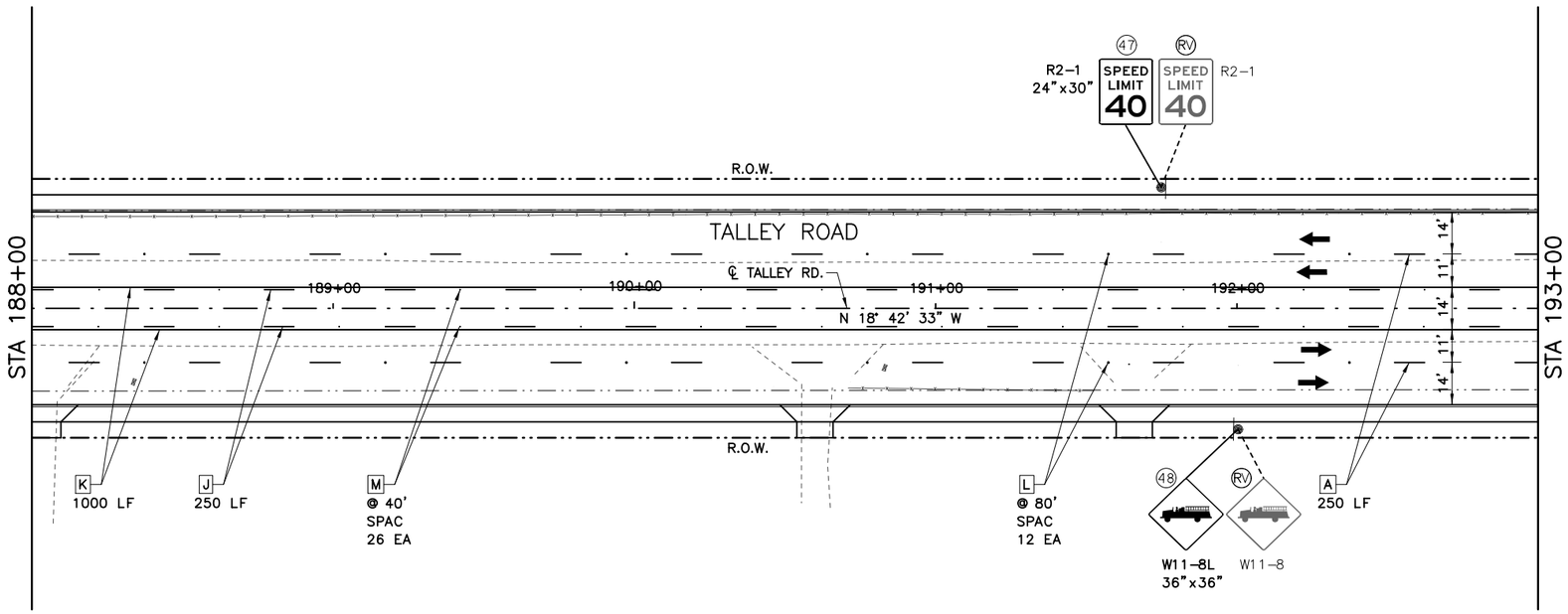

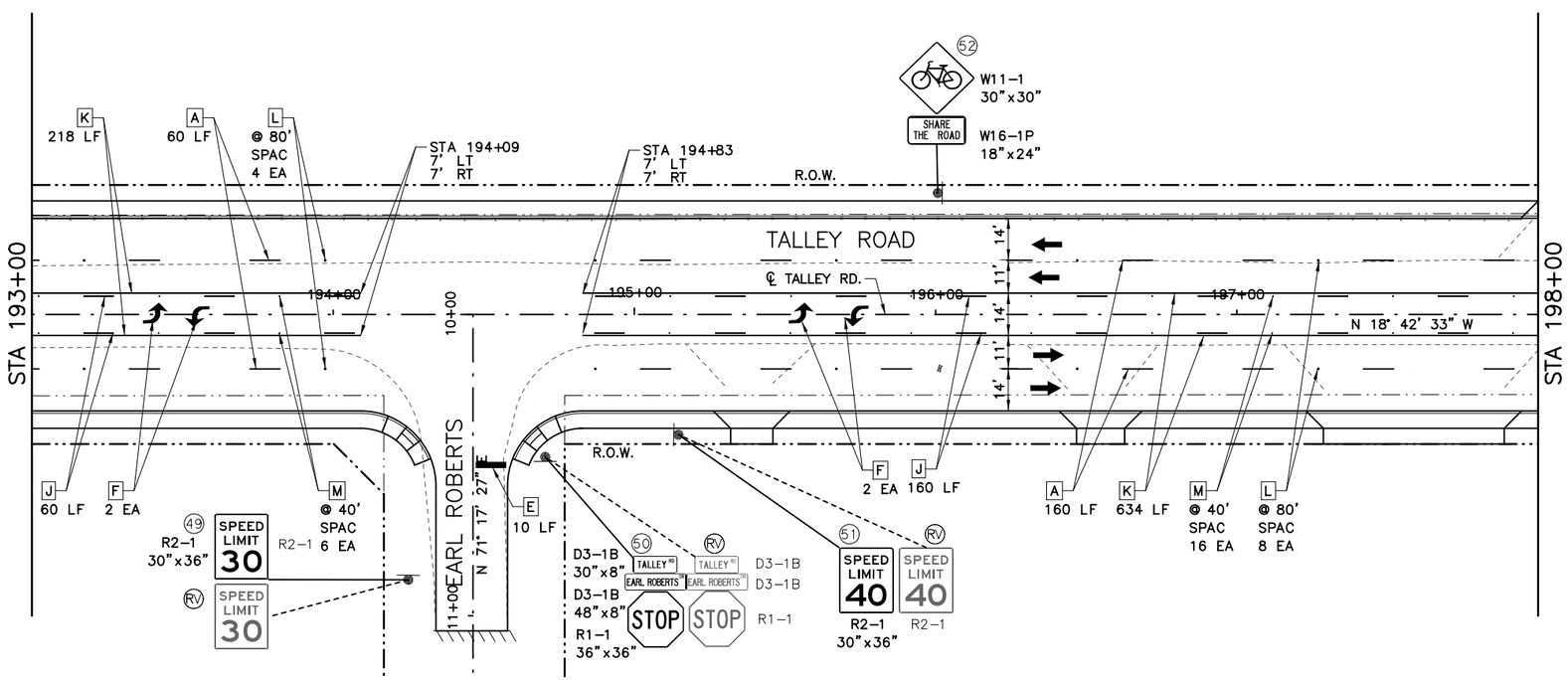

25 12.5 0 25 50
SCALE FEET

LEGEND:

- A RE PM W/RET REQ TY I (W)4"(BRK)(100MIL)
- B RE PM W/RET REQ TY I (W)4"(SLD)(100MIL)
- C REFL PAV MRK TY I (W)8"(SLD)(100MIL)
- D REFL PAV MRK TY I (W)12"(SLD)(100MIL)
- E REFL PAV MRK TY I (W)24"(SLD)(100MIL)
- F REFL PAV MRK TY I (W)(ARROW)(100MIL)
- G REFL PAV MRK TY I (W)(WORD)(100MIL)
- H REFL PAV MRK TY I (W)(BIKE ARW)(100MIL)
- I REFL PAV MRK TY I (W)(BIKE SYML)(100MIL)
- J RE PM W/RET REQ TY I (Y)4"(BRK)(100MIL)
- K RE PM W/RET REQ TY I (Y)4"(SLD)(100MIL)
- L REFL PAV MRKR TY I-C
- M REFL PAV MRKR TY II-A-A
- N REFL PAV MRKR TY I (Y)24")(SLD)(100MIL)
- O REFL PAV MRKR TY I (Y)MED NOSE(100MIL)

OBJECT MARKER — DELINEATOR
DIRECTION OF TRAFFIC — SIGN POST
(1) PROPOSED SIGN
(RV) EXISTING SIGN TO BE REMOVED
(RM) EXISTING SIGN TO REMAIN
(RL) EXISTING SIGN TO BE RELOCATED

90% SUBMITTAL

DOCUMENT IS FOR INTERIM REVIEW AND NOT INTENDED FOR CONSTRUCTION BIDDING, OR PERMIT PURPOSES.

MARTIN PALACIOS, PE
111619
TEXAS SERIAL NO.
2/22/2017
DATE

BEXAR COUNTY
PUBLIC WORKS DEPARTMENT

CP&Y
T.B.P.E. FIRM # 1741

RPS klotz associates
7550 IH-10, Northwest Center, Suite 300, San Antonio, Texas 78229
T 210.736.0425 • email@klotz.com • Texas PE Firm Reg. #F-929

TALLEY ROAD

SIGNING AND PAVEMENT MARKING LAYOUTS

PROJECT NUMBER:			SHEET NO.
0849-01-046			454
DESIGNED BY:	MP	ROADWAY/HIGHWAY:	
CHECKED BY:	SN	TALLEY ROAD	
DRAWN BY:	MP	STATE	COUNTY
CHECKED BY:	SN	TEXAS	BEXAR

SHEET 10 OF 14

cpybw_ANSIB.tbl
cpypdf_ANSIB.pltcfg
pw:/Active Projects/BEXA14048.01/8.00 Plans and Drawings/8.30 Cut Sheets/8.3.12 Signing and Striping/14048SIGN10.dgn
2/22/2017 10:03:59 AM martin.palacios

CP&Y
CHECKPRINT

REVIEWER
Initial:
Date:
VERIFIED
Initial:
Date:
PROCESSED
Initial:
Date:
VERIFIED
Initial:
Date:

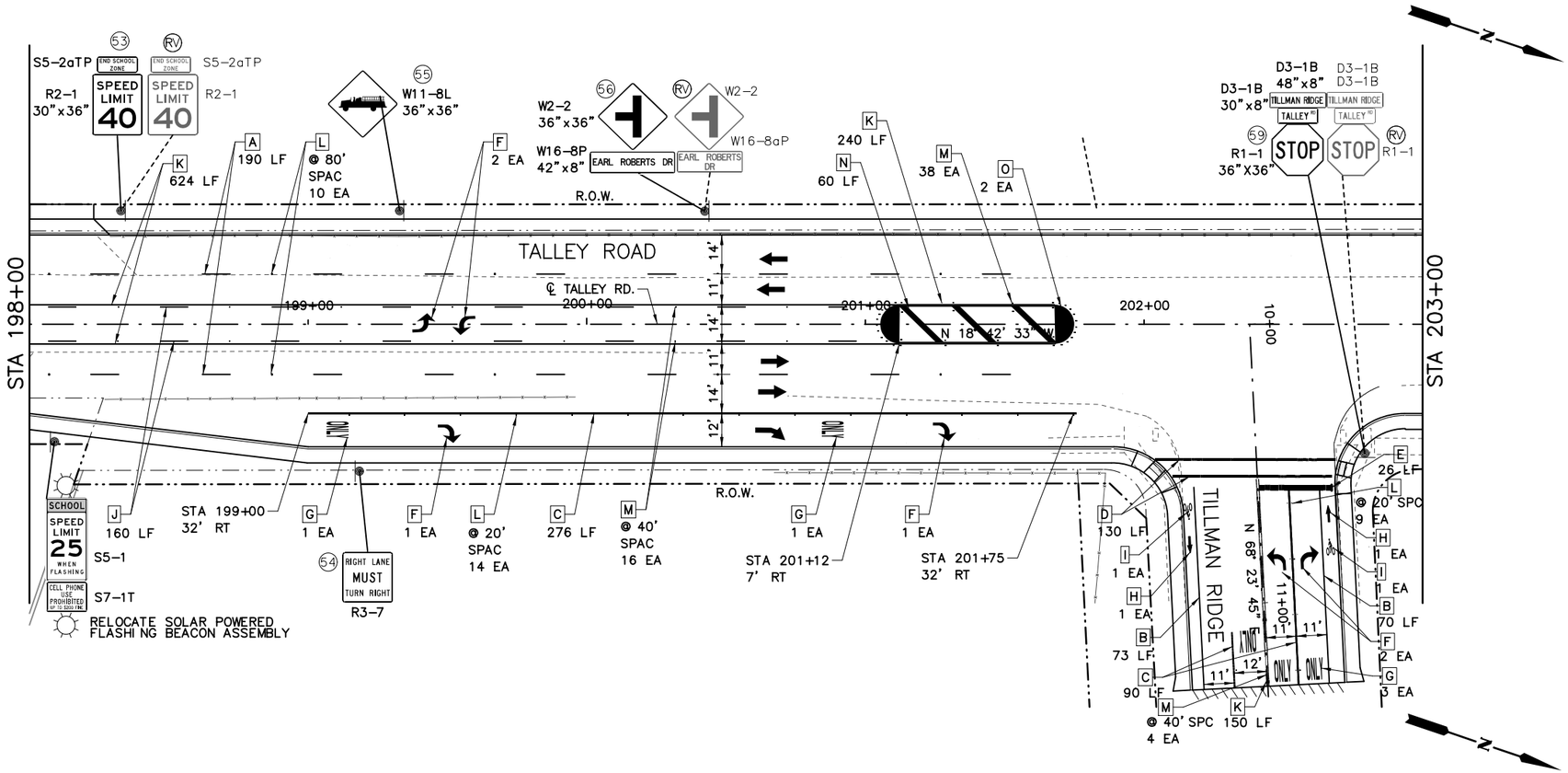

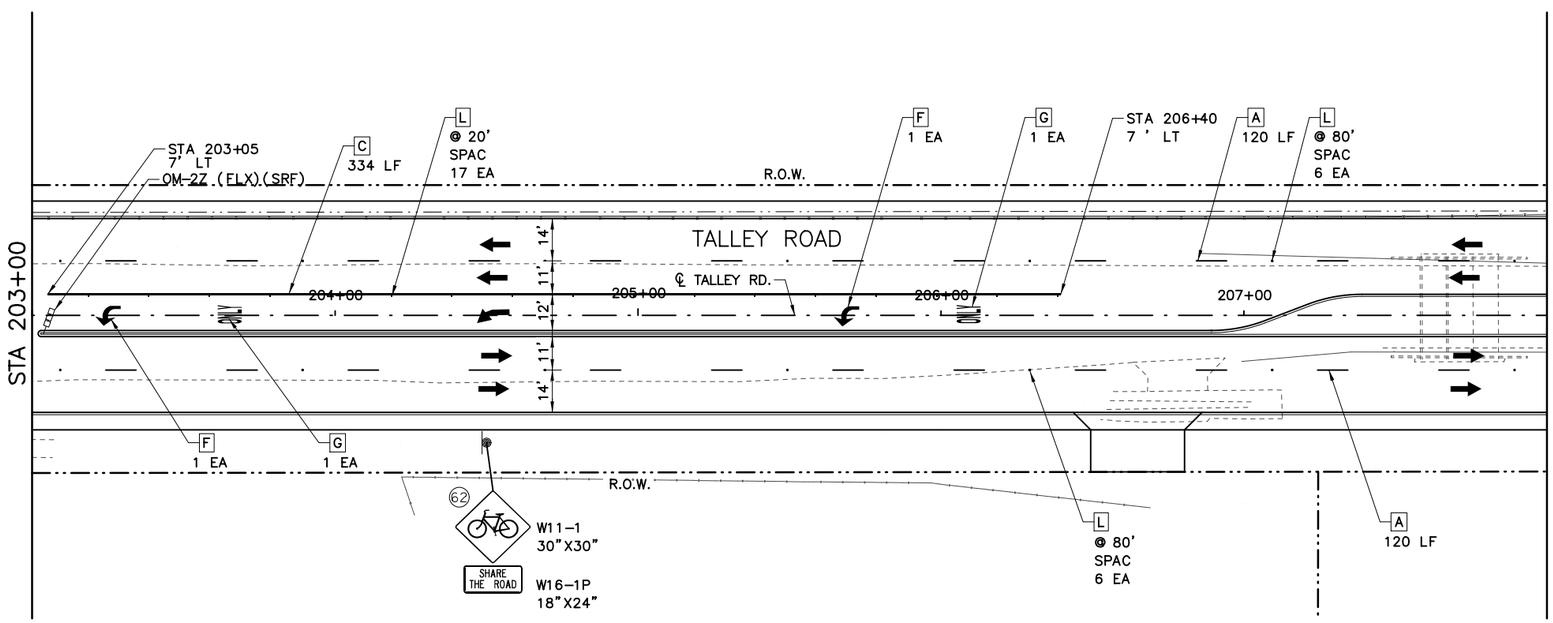

HORIZ.

25 12.5 0 25 50

SCALE FEET

LEGEND:

- A RE PM W/RET REQ TY I (W)4"(BRK)(100MIL)
- B RE PM W/RET REQ TY I (W)4"(SLD)(100MIL)
- C REFL PAV MRK TY I (W)8"(SLD)(100MIL)
- D REFL PAV MRK TY I (W)12"(SLD)(100MIL)
- E REFL PAV MRK TY I (W)24"(SLD)(100MIL)
- F REFL PAV MRK TY I (W)(ARROW)(100MIL)
- G REFL PAV MRK TY I (W)(WORD)(100MIL)
- H REFL PAV MRK TY I (W)(BIKE ARW)(100MIL)
- I REFL PAV MRK TY I (W)(BIKE SYML)(100MIL)
- J RE PM W/RET REQ TY I (Y)4"(BRK)(100MIL)
- K RE PM W/RET REQ TY I (Y)4"(SLD)(100MIL)
- L REFL PAV MRKR TY I-C
- M REFL PAV MRKR TY II-A-A
- N REFL PAV MRKR TY I (Y)24")(SLD)(100MIL)
- O REFL PAV MRKR TY I (Y)MED NOSE(100MIL)

OBJECT MARKER — DELINEATOR
DIRECTION OF TRAFFIC — SIGN POST
(1) PROPOSED SIGN
(RV) EXISTING SIGN TO BE REMOVED
(RM) EXISTING SIGN TO REMAIN
(RL) EXISTING SIGN TO BE RELOCATED

90% SUBMITTAL
DOCUMENT IS FOR INTERIM REVIEW AND NOT INTENDED FOR CONSTRUCTION BIDDING, OR PERMIT PURPOSES.
MARTIN PALACIOS, PE
111619
TEXAS SERIAL NO.
2/23/2017
DATE

BEXAR COUNTY
PUBLIC WORKS DEPARTMENT

CP&Y
T.B.P.E. FIRM # 1741

RPS klotz associates
7550 IH-10, Northwest Center, Suite 300, San Antonio, Texas 78229
T 210.736.0425 • email@klotz.com • Texas PE Firm Reg. #F-929

TALLEY ROAD

SIGNING AND PAVEMENT MARKING LAYOUTS

PROJECT NUMBER:			SHEET NO.
0849-01-046			455
DESIGNED BY:	MP	ROADWAY/HIGHWAY:	
CHECKED BY:	SN	TALLEY ROAD	
DRAWN BY:	MP	STATE	COUNTY
CHECKED BY:	SN	TEXAS	BEXAR

SHEET 11 OF 14

cpybw_ANSIB.tbl
cpypdf_ANSIB.pltcfg
pw:/Active Projects/BEXA14048.01/8.00 Plans and Drawings/8.30 Cut Sheets/8.3.12 Signing and Striping/14048SIGN11.dgn
2/23/2017 3:38:43 PM martin.palacios

CP&Y
CHECKPRINT

REVIEWER
Initial:
Date:
VERIFIED
Initial:
Date:
PROCESSED
Initial:
Date:
VERIFIED
Initial:
Date:

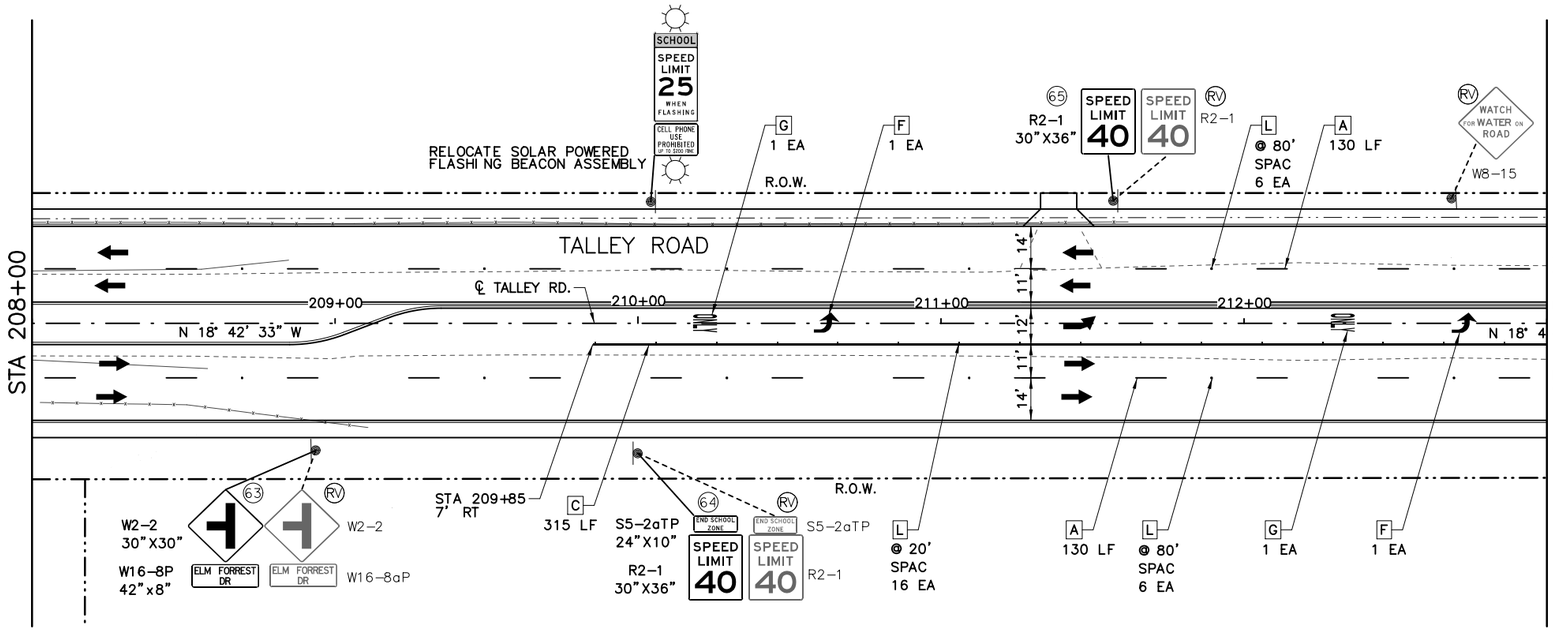

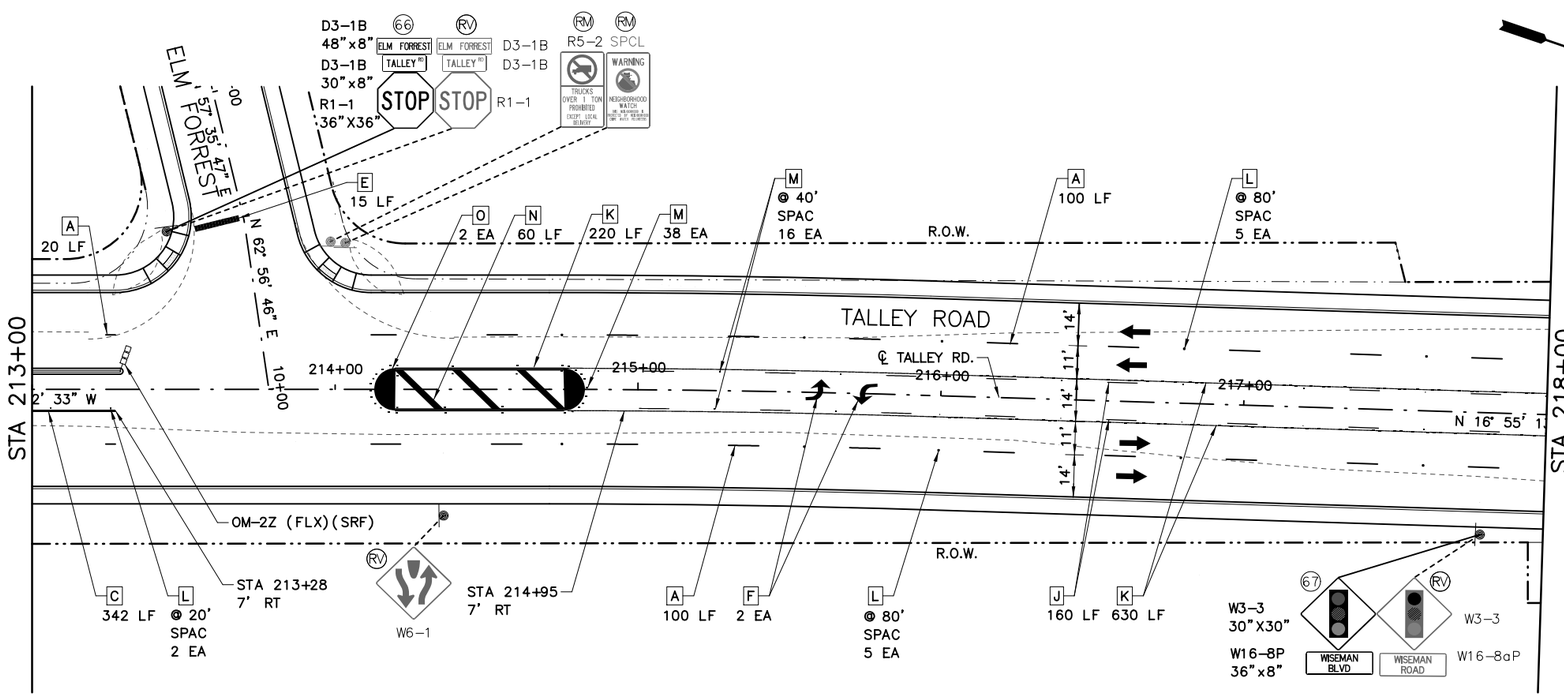

25 12.5 0 25 50
SCALE FEET

LEGEND:

- A RE PM W/RET REQ TY I (W)4"(BRK)(100MIL)
- B RE PM W/RET REQ TY I (W)4"(SLD)(100MIL)
- C REFL PAV MRK TY I (W)8"(SLD)(100MIL)
- D REFL PAV MRK TY I (W)12"(SLD)(100MIL)
- E REFL PAV MRK TY I (W)24"(SLD)(100MIL)
- F REFL PAV MRK TY I (W)(ARROW)(100MIL)
- G REFL PAV MRK TY I (W)(WORD)(100MIL)
- H REFL PAV MRK TY I (W)(BIKE ARW)(100MIL)
- I REFL PAV MRK TY I (W)(BIKE SYML)(100MIL)
- J RE PM W/RET REQ TY I (Y)4"(BRK)(100MIL)
- K RE PM W/RET REQ TY I (Y)4"(SLD)(100MIL)
- L REFL PAV MRKR TY I-C
- M REFL PAV MRKR TY II-A-A
- N REFL PAV MRKR TY I (Y)24")(SLD)(100MIL)
- O REFL PAV MRKR TY I (Y)MED NOSE(100MIL)

OBJECT MARKER — DELINEATOR
DIRECTION OF TRAFFIC — SIGN POST
(1) PROPOSED SIGN
(RV) EXISTING SIGN TO BE REMOVED
(RM) EXISTING SIGN TO REMAIN
(RL) EXISTING SIGN TO BE RELOCATED

90% SUBMITTAL

DOCUMENT IS FOR INTERIM REVIEW AND NOT INTENDED FOR CONSTRUCTION BIDDING, OR PERMIT PURPOSES.
MARTIN PALACIOS, PE
111619
TEXAS SERIAL NO.
2/22/2017
DATE

BEXAR COUNTY
PUBLIC WORKS DEPARTMENT

CP&Y
T.B.P.E. FIRM # 1741

RPS klotz associates
7550 IH-10, Northwest Center, Suite 300, San Antonio, Texas 78229
T 210.736.0425 • email@klotz.com • Texas PE Firm Reg. #F-929

TALLEY ROAD

SIGNING AND PAVEMENT MARKING LAYOUTS

PROJECT NUMBER:			SHEET NO.
0849-01-046			456
DESIGNED BY:	MP	ROADWAY/HIGHWAY:	
CHECKED BY:	SN	TALLEY ROAD	
DRAWN BY:	MP	STATE	COUNTY
CHECKED BY:	SN	TEXAS	BEXAR

SHEET 12 OF 14

cpybw_ANSIB.tbl
cpypdf_ANSIB.pltcfg
pw:/Active Projects/BEXA14048.01/8.00 Plans and Drawings/8.30 Cut Sheets/8.3.12 Signing and Striping/14048SIGN12.dgn
2/22/2017 10:04:11 AM martin.palacios

CP&Y CHECKPRINT

REVIEWER
Initial:
Date:
VERIFIED
Initial:
Date:
PROCESSED
Initial:
Date:
VERIFIED
Initial:
Date:

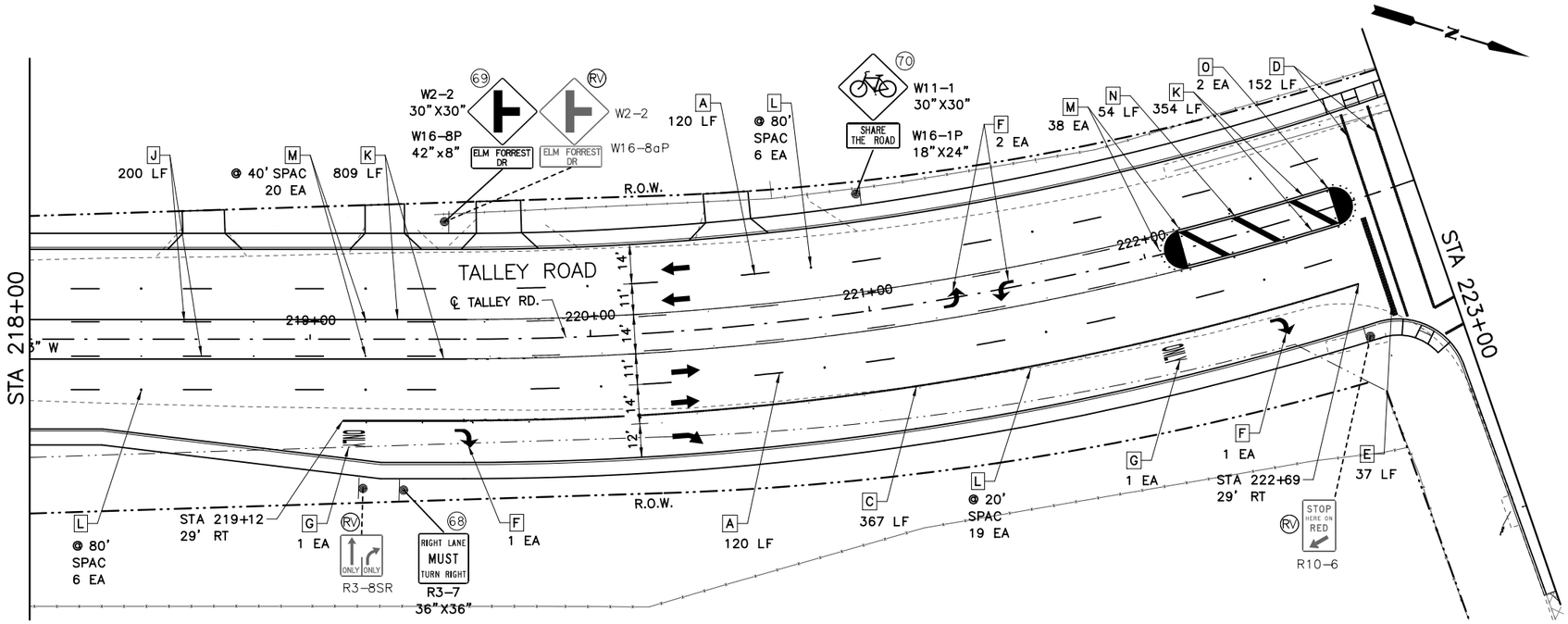

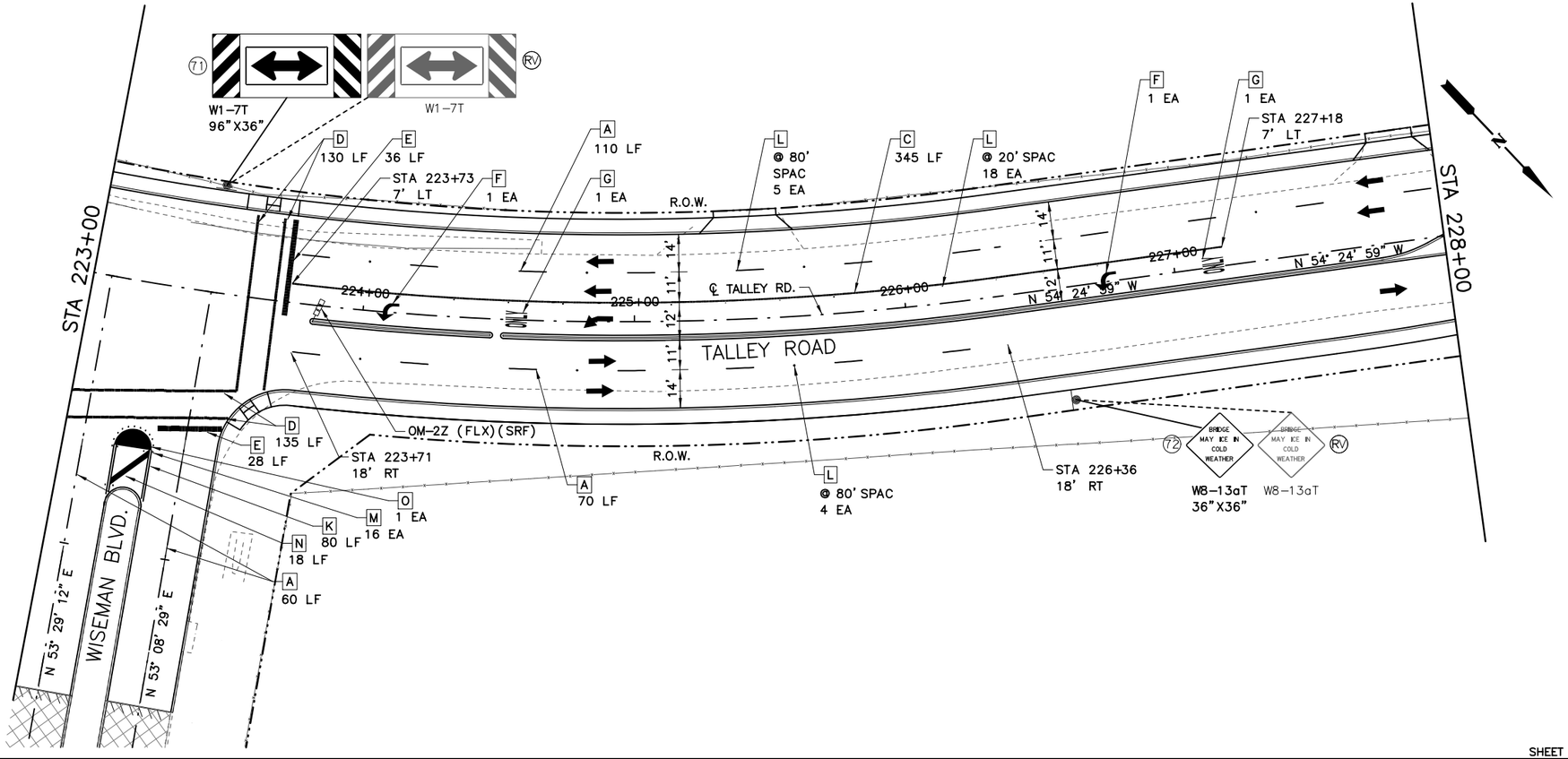

25 12.5 0 25 50
SCALE FEET

LEGEND:

- A RE PM W/RET REQ TY I (W)4"(BRK)(100MIL)
- B RE PM W/RET REQ TY I (W)4"(SLD)(100MIL)
- C REFL PAV MRK TY I (W)8"(SLD)(100MIL)
- D REFL PAV MRK TY I (W)12"(SLD)(100MIL)
- E REFL PAV MRK TY I (W)24"(SLD)(100MIL)
- F REFL PAV MRK TY I (W)(ARROW)(100MIL)
- G REFL PAV MRK TY I (W)(WORD)(100MIL)
- H REFL PAV MRK TY I (W)(BIKE ARW)(100MIL)
- I REFL PAV MRK TY I (W)(BIKE SYML)(100MIL)
- J RE PM W/RET REQ TY I (Y)4"(BRK)(100MIL)
- K RE PM W/RET REQ TY I (Y)4"(SLD)(100MIL)
- L REFL PAV MRKR TY I-C
- M REFL PAV MRKR TY II-A-A
- N REFL PAV MRKR TY I (Y)24")(SLD)(100MIL)
- O REFL PAV MRKR TY I (Y)MED NOSE(100MIL)

OBJECT MARKER — DELINEATOR
DIRECTION OF TRAFFIC — SIGN POST
(1) PROPOSED SIGN
(RV) EXISTING SIGN TO BE REMOVED
(RM) EXISTING SIGN TO REMAIN
(RL) EXISTING SIGN TO BE RELOCATED

90% SUBMITTAL

DOCUMENT IS FOR INTERIM REVIEW AND NOT INTENDED FOR CONSTRUCTION BIDDING, OR PERMIT PURPOSES.
MARTIN PALACIOS, PE
111619
TEXAS SERIAL NO.
2/22/2017
DATE

BEXAR COUNTY
PUBLIC WORKS DEPARTMENT

CP&Y
T.B.P.E. FIRM # 1741

RPS klotz associates
7550 IH-10, Northwest Center, Suite 300, San Antonio, Texas 78229
T 210.736.0425 • email@klotz.com • Texas PE Firm Reg. #F-929

TALLEY ROAD

SIGNING AND PAVEMENT MARKING LAYOUTS

PROJECT NUMBER:		SHEET NO.
0849-01-046		457
DESIGNED BY: MP	ROADWAY/HIGHWAY:	
CHECKED BY: SN	TALLEY ROAD	
DRAWN BY: MP	STATE	COUNTY
CHECKED BY: SN	TEXAS	BEXAR

SHEET 13 OF 14

cpybw_ANSIB.tbl
cpypdf_ANSIB.pltcfg
pw:/Active Projects/BEXA14048.01/8.00 Plans and Drawings/8.30 Cut Sheets/8.3.12 Signing and Striping/14048SIGN13.dgn
2/22/2017 10:04:17 AM martin.palacios

CP&Y
CHECKPRINT

REVIEWER
Initial:
Date:
VERIFIED
Initial:
Date:
PROCESSED
Initial:
Date:
VERIFIED
Initial:
Date:

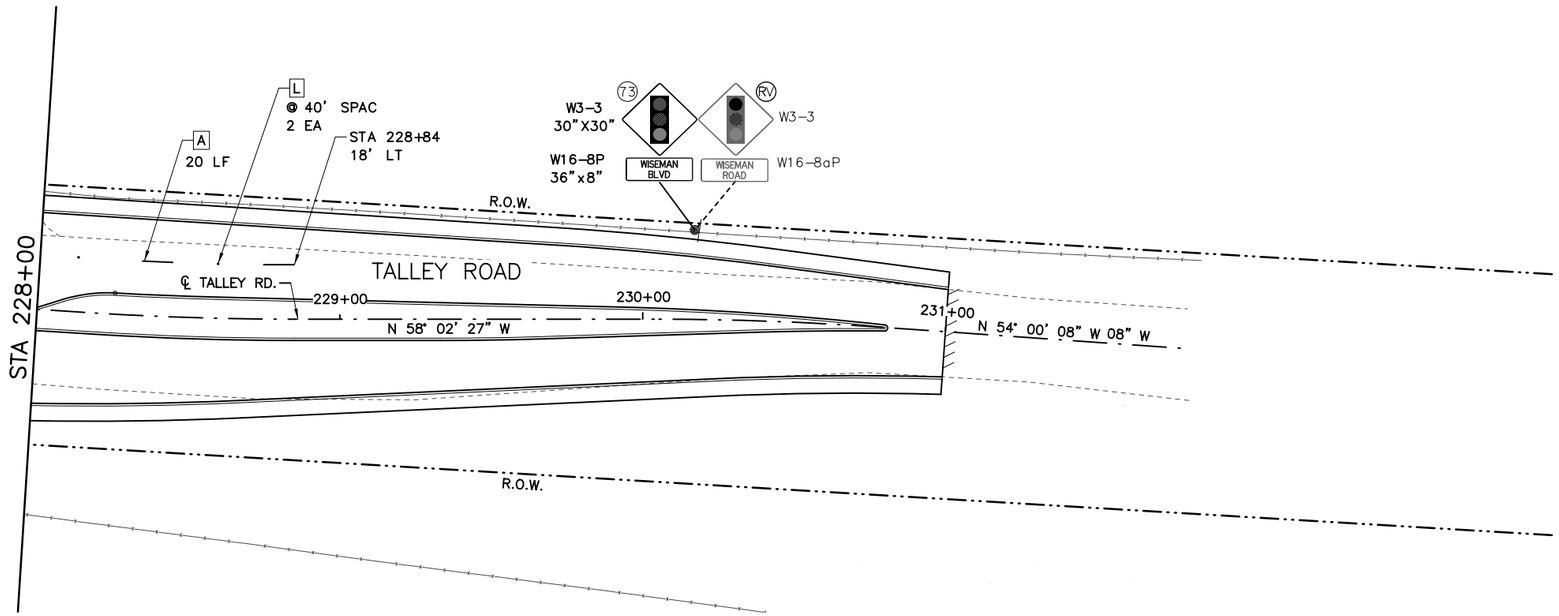

N

25 12.5 0 25 50
SCALE FEET

LEGEND:

- A RE PM W/RET REQ TY I (W)4"(BRK)(100MIL)
- B RE PM W/RET REQ TY I (W)4"(SLD)(100MIL)
- C REFL PAV MRK TY I (W)8"(SLD)(100MIL)
- D REFL PAV MRK TY I (W)12"(SLD)(100MIL)
- E REFL PAV MRK TY I (W)24"(SLD)(100MIL)
- F REFL PAV MRK TY I (W)(ARROW)(100MIL)
- G REFL PAV MRK TY I (W)(WORD)(100MIL)
- H REFL PAV MRK TY I (W)(BIKE ARW)(100MIL)
- I REFL PAV MRK TY I (W)(BIKE SYML)(100MIL)
- J RE PM W/RET REQ TY I (Y)4"(BRK)(100MIL)
- K RE PM W/RET REQ TY I (Y)4"(SLD)(100MIL)
- L REFL PAV MRKR TY I-C
- M REFL PAV MRKR TY II-A-A
- N REFL PAV MRKR TY I (Y)24")(SLD)(100MIL)
- O REFL PAV MRKR TY I (Y)MED NOSE(100MIL)

OBJECT MARKER — DELINEATOR
DIRECTION OF TRAFFIC — SIGN POST
(1) PROPOSED SIGN
(RV) EXISTING SIGN TO BE REMOVED
(RM) EXISTING SIGN TO REMAIN
(RL) EXISTING SIGN TO BE RELOCATED

90% SUBMITTAL

DOCUMENT IS FOR INTERIM REVIEW AND NOT INTENDED FOR CONSTRUCTION BIDDING, OR PERMIT PURPOSES.
MARTIN PALACIOS, PE
111619
TEXAS SERIAL NO.
2/22/2017
DATE

BEXAR COUNTY
PUBLIC WORKS DEPARTMENT

CP&Y
T.B.P.E. FIRM # 1741

RPS klotz associates
7550 IH-10, Northwest Center, Suite 300, San Antonio, Texas 78229
T 210.736.0425 • email@klotz.com • Texas PE Firm Reg. #F-929

TALLEY ROAD

SIGNING AND PAVEMENT MARKING LAYOUTS

PROJECT NUMBER:			SHEET NO.
0849-01-046			458
DESIGNED BY:	MP	ROADWAY/HIGHWAY:	
CHECKED BY:	SN	TALLEY ROAD	
DRAWN BY:	MP	STATE	COUNTY
CHECKED BY:	SN	TEXAS	BEXAR

SHEET 14 OF 14

2/22/2017 10:04:22 AM martin.palacios
cpybw_ANSIB.tbl
cpypdf_ANSIB.pltcfg
pw:/Active Projects/BEXA14048.01/8.00 Plans and Drawings/8.30 Cut Sheets/8.3.12 Signing and Striping/14048SIGN14.dgn

CP&Y CHECKPRINT

REVIEWER
Initial:
Date:
VERIFIED
Initial:
Date:
PROCESSED
Initial:
Date:
VERIFIED
Initial:
Date:

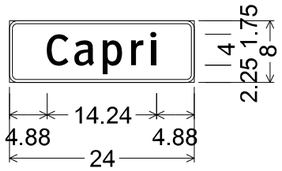

1.00" Radius, 0.375" Border, White on Blue;
[Capri] ClearviewHwy-3-W;
Table of letter and object lefts.

C 4.88	a 8.45	p 12.16	r 15.80	i 18.26

7

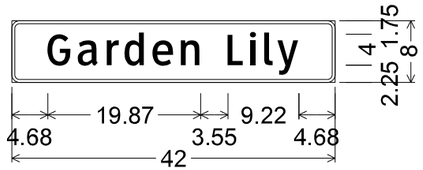

1.00" Radius, 0.375" Border, White on Blue;
[Garden Lily] ClearviewHwy-3-W;
Table of letter and object lefts.

G 4.68	a 8.62	r 12.32	d 14.69	e 18.33	n 22.02
L 28.10	i 30.92	l 32.86	y 34.54		

11

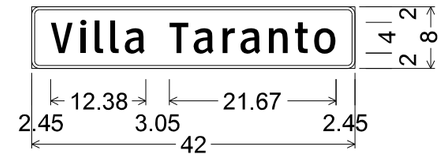

1.00" Radius, 0.375" Border, White on Blue;
[Villa Taranto] ClearviewHwy-3-W;
Table of letter and object lefts.

V 2.45	i 6.29	l 8.23	l 10.27	a 12.14		
T 17.88	a 21.09	r 24.80	a 27.17	n 30.88	t 34.22	o 36.75

13

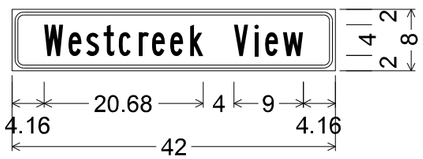

1.50" Radius, 0.375" Border, 0.375" Indent, Black on Yellow;
[Westcreek View] B;
Table of letter and object lefts.

W 4.16	e 7.33	s 9.63	t 11.89	c 13.86	r 16.47	e 18.18	e 20.54	k 23.15
V 28.84	i 31.49	e 32.89	w 35.21					

16 23

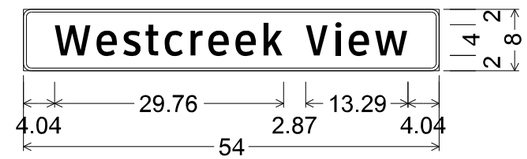

1.00" Radius, 0.375" Border, White on Blue;
[Westcreek View] ClearviewHwy-3-W;
Table of letter and object lefts.

W 4.04	e 9.53	s 12.94	t 15.86	c 18.39	r 21.69	e 24.06	e 27.59	k 31.27
V 36.67	i 40.51	e 42.30	w 45.71					

21

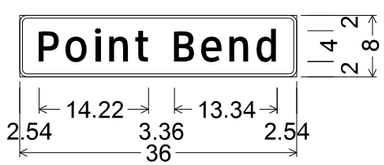

1.00" Radius, 0.375" Border, White on Blue;
[Point Bend] ClearviewHwy-3-W;
Table of letter and object lefts.

P 2.54	o 6.00	i 9.75	n 11.69	t 15.04
B 20.12	e 23.63	n 27.31	d 30.84	

24

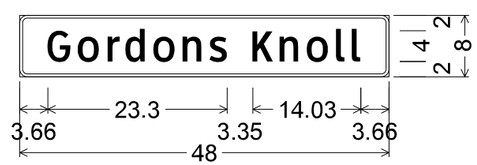

1.00" Radius, 0.375" Border, White on Blue;
[Gordons Knoll] ClearviewHwy-3-W;
Table of letter and object lefts.

G 3.66	o 7.59	r 11.41	d 13.79	o 17.42	n 21.24	s 24.66
K 30.31	n 33.83	o 37.36	l 41.18	l 43.21		

28

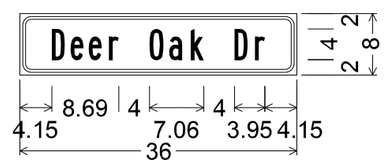

1.50" Radius, 0.375" Border, 0.375" Indent, Black on Yellow;
[Deer Oak Dr] B;
Table of letter and object lefts.

D 4.15	e 6.59	e 8.96	r 11.56
O 16.84	a 19.41	k 22.21	
D 27.90	r 30.56		

29 37

NOTE:

1. ALL STREET NAME SIGNS (D3-1) SHALL HAVE TEXT PRINTED ON BOTH SIDES AND SHALL BE MOUNTED WITH THEIR FACES PARALLEL TO THE STREETS THEY NAME.

90% SUBMITTAL

DOCUMENT IS FOR INTERIM REVIEW AND NOT INTENDED FOR CONSTRUCTION BIDDING, OR PERMIT PURPOSES.
MARTIN PALACIOS, PE
111619
TEXAS SERIAL NO.
2/22/2017
DATE

BEXAR COUNTY
PUBLIC WORKS DEPARTMENT

CP&Y
T.B.P.E. FIRM # 1741

RPS klotz associates
7550 IH-10, Northwest Center, Suite 300, San Antonio, Texas 78229
T 210.736.0425 • email@klotz.com • Texas PE Firm Reg. #F-929

TALLEY ROAD

SIGN DETAILS

PROJECT NUMBER:			SHEET NO.
0849-01-046			459
DESIGNED BY:	MP	ROADWAY/HIGHWAY:	
CHECKED BY:	SN	TALLEY ROAD	
DRAWN BY:	MP	STATE	COUNTY
CHECKED BY:	SN	TEXAS	BEXAR

SHEET 1 OF 3

CP&Y CHECKPRINT

REVIEWER
Initial:
Date:
VERIFIED
Initial:
Date:
PROCESSED
Initial:
Date:
VERIFIED
Initial:
Date:

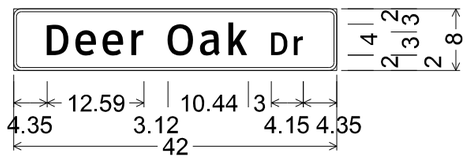

1.00" Radius, 0.375" Border, White on Blue;
[Deer Oak] ClearviewHwy-3-W;
[Dr] ClearviewHwy-3-W;
Table of letter and object lefts.

D 4.35	e 8.08	e 11.60	r 15.29
O 20.06	a 24.26	k 27.97	
D 33.50	r 36.41		

34

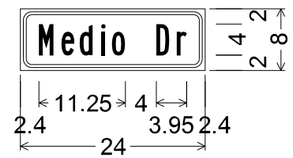

1.50" Radius, 0.375" Border, 0.375" Indent, Black on Yellow;
[Medio Dr] B;
Table of letter and object lefts.

M 2.40	e 5.33	d 7.70	i 10.50	o 11.89
D 17.65	r 20.32			

38 44

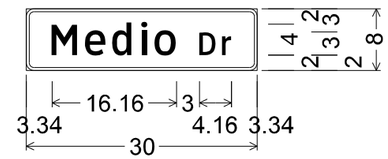

1.00" Radius, 0.375" Border, White on Blue;
[Medio] ClearviewHwy-3-W;
[Dr] ClearviewHwy-3-W;
Table of letter and object lefts.

M 3.34	e 7.66	d 11.19	i 14.92	o 16.70
D 22.50	r 25.42			

42

NOTE:

1. ALL STREET NAME SIGNS (D3-1) SHALL HAVE TEXT PRINTED ON BOTH SIDES AND SHALL BE MOUNTED WITH THEIR FACES PARALLEL TO THE STREETS THEY NAME.

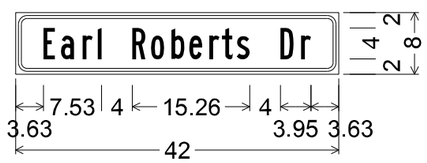

1.50" Radius, 0.375" Border, 0.375" Indent, Black on Yellow;
[Earl Roberts Dr] B;
Table of letter and object lefts.

E 3.63	a 5.90	r 8.70	l 10.66				
R 15.16	o 17.60	b 20.25	e 22.57	r 25.18	t 26.83	s 28.73	
D 34.42	r 37.09						

46 56

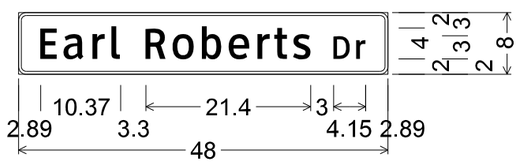

1.00" Radius, 0.375" Border, White on Blue;
[Earl Roberts] ClearviewHwy-3-W;
[Dr] ClearviewHwy-3-W;
Table of letter and object lefts.

E 2.89	a 5.89	r 9.60	l 12.13				
R 16.56	o 20.06	b 23.88	e 27.36	r 31.05	t 33.24	s 35.66	
D 40.96	r 43.88						

50

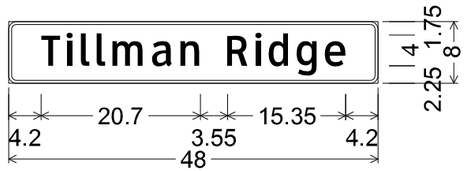

1.00" Radius, 0.375" Border, White on Blue;
[Tillman Ridge] ClearviewHwy-3-W;
Table of letter and object lefts.

T 4.20	i 7.50	l 9.45	l 11.48	m 13.54	a 18.67	n 22.37
R 28.45	i 32.05	d 33.83	g 37.47	e 41.13		

59

90% SUBMITTAL

DOCUMENT IS FOR INTERIM REVIEW AND NOT INTENDED FOR CONSTRUCTION BIDDING, OR PERMIT PURPOSES.
MARTIN PALACIOS, PE
111619
TEXAS SERIAL NO.
2/22/2017
DATE

BEXAR COUNTY
PUBLIC WORKS DEPARTMENT

CP&Y T.B.P.E. FIRM # 1741

RPS klotz associates
7550 IH-10, Northwest Center, Suite 300, San Antonio, Texas 78229
T 210.736.0425 • email@klotz.com • Texas PE Firm Reg. #F-929

TALLEY ROAD

SIGN DETAILS

PROJECT NUMBER:			SHEET NO.
0849-01-046			460
DESIGNED BY:	MP	ROADWAY/HIGHWAY:	
CHECKED BY:	SN	TALLEY ROAD	
DRAWN BY:	MP	STATE	COUNTY
CHECKED BY:	SN	TEXAS	BEXAR

SHEET 2 OF 3

CP&Y
CHECKPRINT

REVIEWER
Initial:
Date:
VERIFIED
Initial:
Date:
PROCESSED
Initial:
Date:
VERIFIED
Initial:
Date:

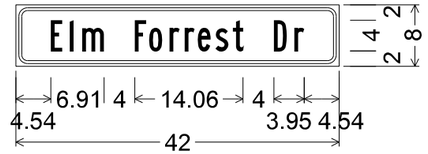

1.50" Radius, 0.375" Border, 0.375" Indent, Black on Yellow;
[Elm Forrest Dr] B;
Table of letter and object lefts.

E	l	m							
4.54	6.99	8.61							
	F	o	r	r	e	s	t		
	15.45	17.31	19.96	21.92	23.63	25.93	28.19		
	D	r							
	33.51	36.17							

63 69

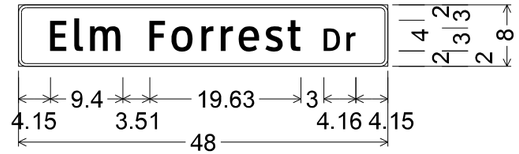

1.00" Radius, 0.375" Border, White on Blue;
[Elm Forrest] ClearviewHwy-3-W;
[Dr] ClearviewHwy-3-W;
Table of letter and object lefts.

E	l	m					
4.15	7.32	9.37					
	F	o	r	r	e	s	t
	17.06	19.93	23.75	26.28	28.65	32.06	34.98
	D	r					
	39.69	42.61					

66

NOTE:

1. ALL STREET NAME SIGNS (D3-1) SHALL HAVE TEXT PRINTED ON BOTH SIDES AND SHALL BE MOUNTED WITH THEIR FACES PARALLEL TO THE STREETS THEY NAME.

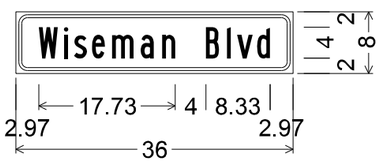

1.50" Radius, 0.375" Border, 0.375" Indent, Black on Yellow;
[Wiseman Blvd] B;
Table of letter and object lefts.

W	i	s	e	m	a	n
2.97	6.24	7.55	9.88	12.48	16.21	19.01
	B	l	v	d		
	24.70	27.43	28.74	31.34		

67 73

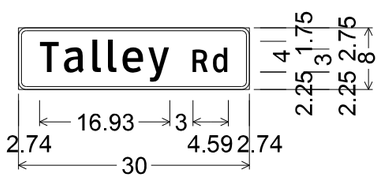

1.00" Radius, 0.375" Border, White on Blue;
[Talley] ClearviewHwy-3-W;
[Rd] ClearviewHwy-3-W;
Table of letter and object lefts.

T	a	l	l	e	y
2.74	5.95	9.66	11.69	13.56	16.89
	R	d			
	22.67	25.29			

8 12 14 22 24 28

34 42 50 59 66

90% SUBMITTAL

DOCUMENT IS FOR INTERIM REVIEW AND NOT INTENDED FOR CONSTRUCTION BIDDING, OR PERMIT PURPOSES.
MARTIN PALACIOS, PE
111619
TEXAS SERIAL NO.
2/22/2017
DATE

BEXAR COUNTY
PUBLIC WORKS DEPARTMENT

CP&Y
T.B.P.E. FIRM # 1741

RPS klotz associates
7550 IH-10, Northwest Center, Suite 300, San Antonio, Texas 78229
T 210.736.0425 • email@klotz.com • Texas PE Firm Reg. #F-929

TALLEY ROAD

SIGN DETAILS

PROJECT NUMBER:			SHEET NO.
0849-01-046			461
DESIGNED BY:	MP	ROADWAY/HIGHWAY:	
CHECKED BY:	SN	TALLEY ROAD	
DRAWN BY:	MP	STATE	COUNTY
CHECKED BY:	SN	TEXAS	BEXAR

SHEET 3 OF 3

cpybw ANSIB.tbl
cpypdf_ANSIB.pltcfg
pw:/Active Projects/BEXA14048.01/8.00 Plans and Drawings/8.30 Cut Sheets/8.3.12 Signing and Striping/14048SIGNDET03.dgn
2/22/2017 10:04:34 AM martin.palacios

DISCLAIMER: The use of this standard is governed by the "Texas Engineering Practice Act". No warranty of any kind is made by TxDOT for any purpose whatsoever. TxDOT assumes no responsibility for the conversion of this standard to other formats or for incorrect results or damages resulting from its use.

Arm Length	ROUND POLES					POLYGONAL POLES					Foundation Type
	D_B	D_{19}	D_{24}	D_{30}	① thk	D_B	D_{19}	D_{24}	D_{30}	① thk	
ft.	in.	in.	in.	in.	in.	in.	in.	in.	in.	in.	
20	10.5	7.8	7.1	6.3	.179	11.5	8.5	7.7	6.8	.179	30-A
24	11.0	8.3	7.6	6.8	.179	12.0	9.0	8.2	7.3	.179	30-A
28	11.5	8.8	8.1	7.3	.179	12.5	9.5	8.7	7.8	.179	30-A
32	12.5	9.8	9.1	8.3	.179	12.0	9.0	8.2	7.3	.239	30-A
36	12.0	9.3	8.6	7.8	.239	12.5	9.5	8.7	7.8	.239	36-A
40	12.0	9.3	8.6	7.8	.239	13.5	10.5	9.7	8.8	.239	36-A
44	12.5	9.8	9.1	8.3	.239	14.0	11.0	10.2	9.3	.239	36-A
48	13.0	10.3	9.6	8.8	.239	15.0	12.0	11.2	10.3	.239	36-A

Arm Length	ROUND ARMS					POLYGONAL ARMS				
	L_1	D_1	D_2	① thk	Rise	L_1	D_1	② D_2	① thk	Rise
ft.	ft.	in.	in.	in.		ft.	in.	in.	in.	
20	19.1	6.5	3.8	.179	1′-9"	19.1	7.0	3.5	.179	1′-8"
24	23.1	7.5	4.3	.179	1′-10"	23.1	7.5	3.5	.179	1′-9"
28	27.1	8.0	4.2	.179	1′-11"	27.1	8.0	3.5	.179	1′-10"
32	31.0	9.0	4.7	.179	2′-1"	31.0	9.0	3.5	.179	2′-0"
36	35.0	9.5	4.6	.179	2′-4"	35.0	10.0	3.5	.179	2′-1"
40	39.0	9.5	4.1	.239	2′-8"	39.0	9.5	3.5	.239	2′-3"
44	43.0	10.0	4.1	.239	2′-11"	43.0	10.0	3.5	.239	2′-6"
48	47.0	10.5	4.1	.239	3′-4"	47.0	11.0	3.5	.239	2′-9"

D_B = Pole Base O.D.
D_{19} = Pole Top O.D. with no Luminaire and no ILSN
D_{24} = Pole Top O.D. with ILSN w/out Luminaire
D_{30} = Pole Top O.D. with Luminaire
D_1 = Arm Base O.D.
D_2 = Arm End O.D.
L_1 = Shaft Length
L = Nominal Arm Length

① Thickness shown are minimums, thicker materials may be used.

② D_2 may be increased by up to 1" for polygonal arms.

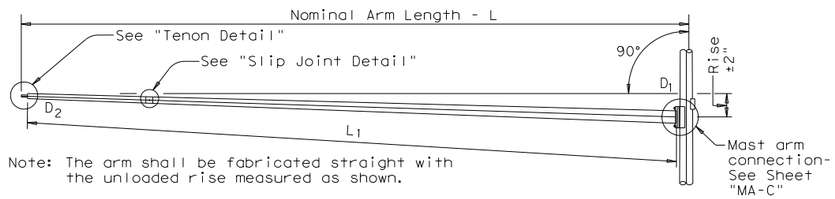

Note: The arm shall be fabricated straight with the unloaded rise measured as shown.

TRAFFIC SIGNAL ARM

(Fixed Mount)

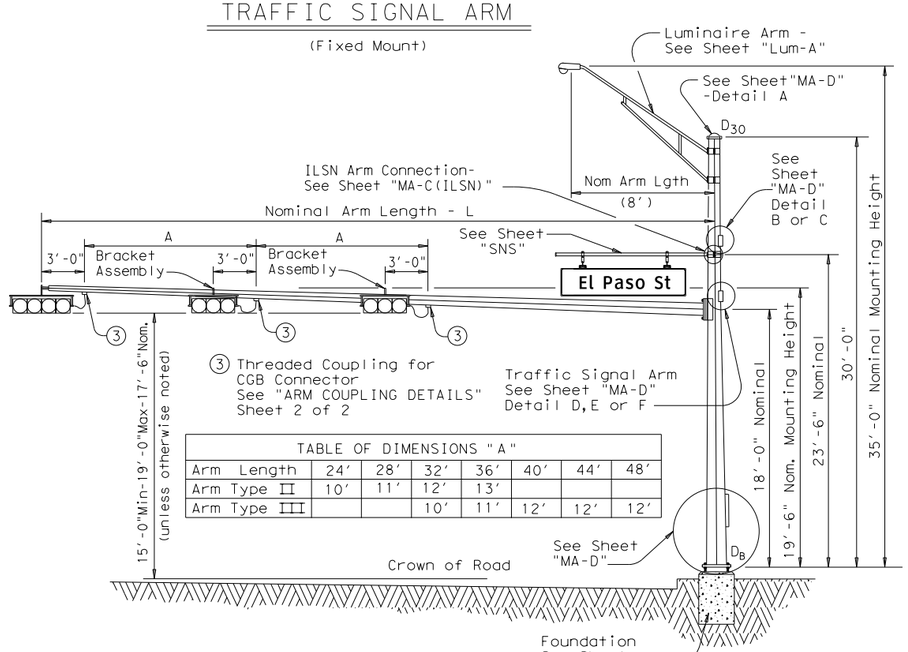

TABLE OF DIMENSIONS "A"							
Arm Length	24′	28′	32′	36′	40′	44′	48′
Arm Type II	10′	11′	12′	13′			
Arm Type III			10′	11′	12′	12′	12′

STRUCTURE ASSEMBLY

SHIPPING PARTS LIST

Ship each pole with the following attached: enlarged hand hole, pole cap, fixed-arm connection bolts and washers and any additional hardware listed in the table.

Nominal Arm Length	30′ Poles With Luminaire		24′ Poles With ILSN		19′ Poles With No Luminaire and No ILSN	
	Above hardware plus: One (or two if ILSN attached) small hand hole, clamp-on simplex		Above hardware plus one small hand hole		See note above	
ft	Designation	Quantity	Designation	Quantity	Designation	Quantity
20	20L-80		20S-80		20-80	
24	24L-80		24S-80		24-80	
28	28L-80		28S-80		28-80	1
32	32L-80		32S-80		32-80	
36	36L-80	1	36S-80		36-80	
40	40L-80	1	40S-80		40-80	
44	44L-80		44S-80		44-80	
48	48L-80		48S-80		48-80	

Traffic Signal Arms (1 per Pole) Ship each arm with the listed equipment attached

Nominal Arm Length	Type I Arm (1 Signal)		Type II Arm (2 Signals)		Type III Arm (3 Signals)	
	1 CGB connector		1 Bracket Assembly and 2 CGB Connectors		2 Bracket Assemblies and 3 CGB Connectors	
ft	Designation	Quantity	Designation	Quantity	Designation	Quantity
20	20I-80					
24	24I-80		24II-80			
28	28I-80		28II-80	1		
32			32II-80		32III-80	
36			36II-80		36III-80	1
40					40III-80	1
44					44III-80	
48					48III-80	

Luminaire Arms (1 per 30′ pole)

Nominal Arm Length	Quantity
8′ Arm	2

ILSN Arm (Max. 2 per pole) Ship with clamps, bolts and washers

Nominal Arm Length	Quantity
7′ Arm	
9′ Arm	

Anchor Bolt Assemblies (1 per pole)

Anchor Bolt Diameter	Anchor Bolt Length	Quantity
1 ½"	3′-4"	1
1 ¾"	3′-10"	2

Each anchor bolt assembly consists of the following: Top and Bottom templates, 4 anchor bolts, 8 nuts, 8 flat washers, and 4 nut anchor devices (Type 2) per Standard Drawing "TS-FD".

Templates may be removed for shipment.

SHEET 1 OF 2

PRELIMINARY - 90%

SUBMITTED FOR INTERIM REVIEW
Under the authority of:

SRIRAM NATARAJAN, P.E. No. 91090
DATE: FEBRUARY, 2017 IT IS NOT TO BE USED FOR CONSTRUCTION, BIDDING OR PERMIT PURPOSES

Texas Department of Transportation
Traffic Operations Division

TRAFFIC SIGNAL SUPPORT STRUCTURES

SINGLE MAST ARM ASSEMBLY

(80 MPH WIND ZONE)

SMA-80(1)-12

© TxDOT August 1995

DN: MS	CK: JSY	DW: MWF	CK: JSY
CONT	SECT	JOB	HIGHWAY
DIST		COUNTY	SHEET NO. 462

REVISIONS
5-96
11-99
1-12

122A

DATE:
FILE:

DISCLAIMER: The use of this standard is governed by the "Texas Engineering Practice Act". No warranty of any kind is made by TxDOT for any purpose whatsoever. TxDOT assumes no responsibility for the conversion of this standard to other formats or for incorrect results or damages resulting from its use.

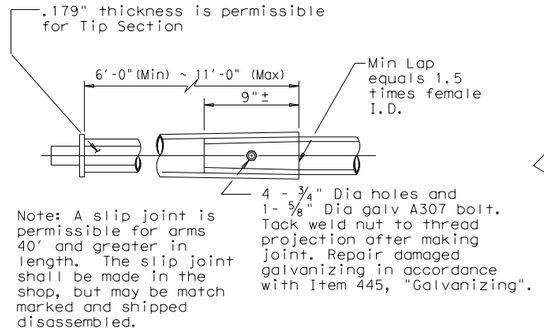

SLIP JOINT DETAIL

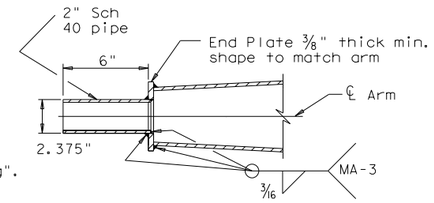

TENON DETAIL

VIBRATION WARNING

Mast Arms of SMA and DMA structures and clamp-on Arms of LMA structures of approximately 40 ft or longer are subject to harmonic vertical vibrations in light wind conditions due to the aeroelastic characteristics of a few of the myriads of possible combinations of the following: signal numbers, weights and positions; existence/solidity of backplates; presence of additional attachments to the arm, such as signs and cameras; arm-wind orientation; and arm-pole stiffness.

Such vibrations may cause fatigue damage to the structure and may lead to galloping in moderate wind conditions which may further damage the structure and alarm the public. Tests have indicated that when wind is blowing toward the back side of signal heads having un-vented backplates attached the probability of unacceptable harmonic vibration and/or galloping is rather high.

If backplates are not required for improved visibility they should not be applied to the signal heads or, if they must be applied, they should be vented as a first and inexpensive measure to mitigate vibrations.

The traffic signal mast arms shall be visually inspected in 5 to 20 mph wind conditions after installation of signal heads and any attachments, including any required backpates. If vertical movements with a total excursion (maximum upward excursion to maximum downward excursion) of more than approximately 8" are observed at the arm tip, a damping plate shall be fitted to the arm. See "Damping Plate Mounting Details" on standard sheet, MA-DPD-10.

This visual inspection shall be repeated after each modification of the structure that could affect its aeroelastic response. Excessive vibrations shall not be allowed to continue for more than two days.

Stainless steel bands (or Cables) and cast bracket as in "Astro-Brac", "Sky Bracket" or "Easy Bracket" with 1 ½" Dia Threaded Coupling.

BRACKET ASSEMBLY

GENERAL NOTES:

Design conforms to 1994 AASHTO Standard Specifications for Structural Supports for Highway Signs, Luminaires, and Traffic Signals and Interim Specifications thereto. Design Wind Speed equals 80 mph plus a 1.3 gust factor.

Poles are designed to support one 8'-0" luminaire arm, one 9'-0" internally lighted street name sign and one traffic signal arm with a length as tabulated. The specified luminaire load applied at the end of the luminaire arm equals 60 lbs vertical dead load plus the horizontal wind load on an effective projected area of 1.6 sq ft. The specified internally lighted street name sign load applied 4.5 ft from the centerline of the pole equals 85 lbs vertical dead load plus horizontal wind load on an effective projected area of 11.5 sq ft. The specified signal load applied at the end of the traffic signal arm equals 180 lbs vertical dead load plus the horizontal wind load on an effective projected area of 32.4 sq ft (actual area times drag coefficient).

See Standard Sheet "MA-D" for pole details, "MA-C" for traffic signal arm connection details, "MA-C (ILSN)" for internally lighted street name sign arm connection details, "LUM-A" for luminaire arm and connection details, "SNS" for internally lighted street name sign details, and "TS-FD" for anchor bolt and foundation details. See "MA-C" for material specifications.

Fabrication shall be in accordance with Item 686, "Traffic Signal Pole Assemblies (Steel)" and with the details, dimensions, and weld procedures shown herein. Weld references call for preapproved weld procedures which the Fabricator must obtain prior to fabrication. Materials, fabrication tolerances, and shipping practices shall meet the requirements of this sheet and Item 686, "Traffic Signal Pole Assemblies (Steel)".

Unless otherwise noted, all parts shall be galvanized in accordance with Item 445, "Galvanizing", after fabrication.

Deviation from the details and dimensions shown herein require submission of shop drawings in accordance with Item 441, "Steel Structures". Alternate designs are not acceptable.

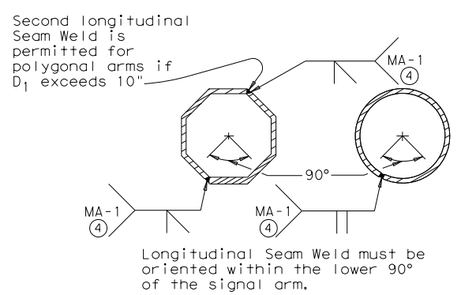

ARM WELD DETAIL

(4) 60% Min. penetration 100% pemetration within 6" of circumferential base welds.

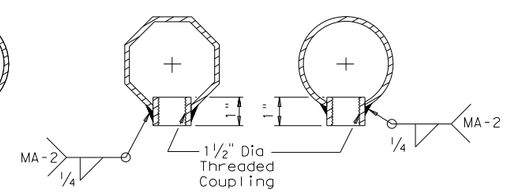

ARM COUPLING DETAILS

Texas Department of Transportation
Traffic Operations Division

TRAFFIC SIGNAL SUPPORT STRUCTURES

SINGLE MAST ARM ASSEMBLY

(80 MPH WIND ZONE)

SMA-80(2)-12

© TxDOT August 1995	DN: MS	CK: JSY	DW: MMF	CK: JSY
REVISIONS	CONT	SECT	JOB	HIGHWAY
5-96 1-12				
	DIST	COUNTY		SHEET NO.
				463

122B

DATE:
FILE:

DISCLAIMER: The use of this standard is governed by the "Texas Engineering Practice Act". No warranty of any kind is made by TxDOT for any purpose whatsoever. TxDOT assumes no responsibility for the conversion of this standard to other formats or for incorrect results or damages resulting from its use.

ARM SIZE D_1	ǂ	A	B	C	D	E	CONN BOLT DIA
in.	in.	in.	in.	in.	in.	in.	in.
6.5	.179	12	9	9	6	1 ¾	1
7.5	.179	13	9	10	6	1 ¾	1
8.0	.179	14	10	11	7	2	1 ¼
9.0	.179	16	11	13	8	2	1 ¼
9.5	.179	17	12	14	9	2	1 ¼
9.5	.239	18	12	15	9	2	1 ¼
10.0	.239	18	12	15	9	2	1 ¼
10.5	.239	18	13	15	10	3	1 ½
11.0	.239	18	13	15	10	3	1 ½

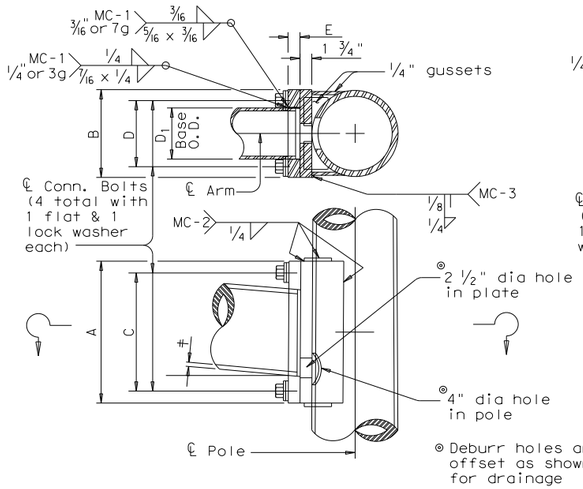

FIXED MOUNT DETAIL 1

ARM SIZE D_1	ǂ	A	F	CONN. BOLTS No.	CONN. BOLTS Dia	PIN BOLTS No.	PIN BOLTS Dia
in.	in.	in.	in.	ea.	in.	ea.	in.
6.5	.179	12	6	4	1	2	5/8
7.5	.179	14	8	4	1	2	5/8
8.0	.179	14	8	4	1	2	5/8
9.0	.179	16	10	4	1	2	5/8
9.5	.179	18	12	4	1 1/4	3	5/8
9.5	.239	18	12	4	1 1/4	3	5/8
10.0	.239	18	12	4	1 1/4	3	5/8

ARM SIZE D_1	ǂ	A	B	C	D	E	CONN BOLT DIA
in.	in.	in.	in.	in.	in.	in.	in.
7.0	.179	11	11	8	8	1 ¾	1 ¼
7.5	.179	11	11	8	8	1 ¾	1 ¼
8.0	.179	11	11	8	8	2	1 ¼
9.0	.179	13	13	10	10	2	1 ¼
10.0	.179	13	13	10	10	2	1 ¼
9.5	.239	13	13	10	10	2	1 ¼
10.0	.239	14	14	11	11	2	1 ½
11.0	.239	14	14	11	11	3	1 ½
11.5	.239	14	14	11	11	3	1 ½

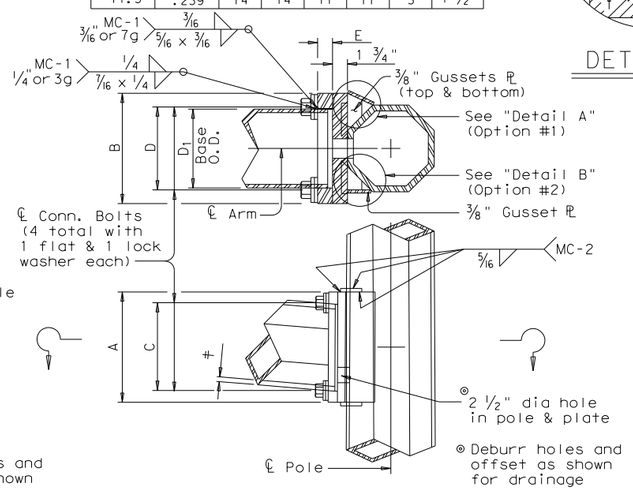

FIXED MOUNT DETAIL 2

ARM SIZE D_1	ǂ	A	F	T	CONN. BOLTS No.	CONN. BOLTS Dia	PIN BOLTS No.	PIN BOLTS Dia
in.	in.	in.	in.	in.	ea.	in.	ea.	in.
7.0	.179	12	6	3/4	4	3/4	2	5/8
7.5	.179	14	8	3/4	4	3/4	2	5/8
8.0	.179	14	8	3/4	4	3/4	2	5/8
9.0	.179	16	10	7/8	4	1	2	5/8
10.0	.179	18	10	7/8	4	1	2	5/8
9.5	.239	18	10	1	6	1	3	5/8
10.0	.239	18	10	1	6	1	3	5/8

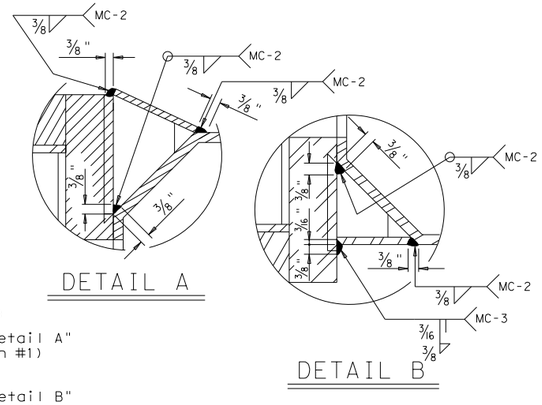

DETAIL A

DETAIL B

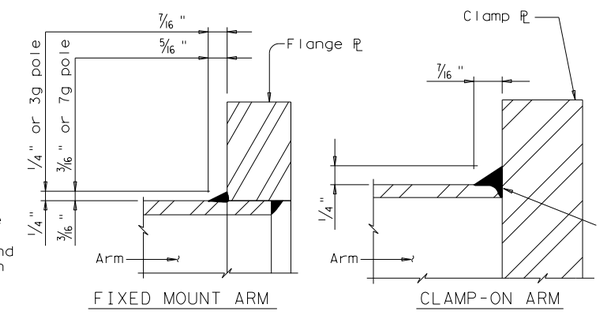

FIXED MOUNT ARM

CLAMP-ON ARM

ARM BASE WELD DETAILS

ARM SIZE D_1	ǂ	A	F	CONN. BOLTS No.	CONN. BOLTS Dia	PIN BOLTS No.	PIN BOLTS Dia
in.	in.	in.	in.	ea.	in.	ea.	in.
6.5	.179	12	6	4	1	2	5/8
7.5	.179	14	8	4	1	2	5/8
8.0	.179	14	8	4	1	2	5/8
9.0	.179	16	10	4	1	2	5/8
9.5	.179	18	12	6	1	3	5/8
9.5	.239	18	12	6	1	3	5/8
10.0	.239	18	12	6	1	3	5/8

MATERIALS	
Round Shafts or Polygonal Shafts ①	ASTM A595 Gr.A, A588, A1008 HSLAS Gr.50 Class 2, A1011 HSLAS Gr.50 Class 2, A572 Gr.50 or A1011 SS Gr.50 ②
Plates ①	ASTM A36, A588, or A572 Gr.50
Connection Bolts	ASTM A325 or A449, except where noted
Pin Bolts	ASTM A325
Pipe ①	ASTM A53 Gr.B, A501, A1008 HSLAS-F Gr.50, A1011 HSLAS-F Gr.50
Misc. Hardware	Galvanized steel or stainless steel or as noted

① ASTM A572, A1008 HSLAS, A1011 HSLAS, A1008 HSLAS-F, A1011 HSLAS-F or A1011 SS may have higher yield strengths but shall not have less elongation than the grade indicated.

② ASTM A1011 SS Gr.50 material shall also have a minimum elongation of 18 percent in 8 inches or 23 percent in 2 inches. Material thickness in excess of those stipulated under A1011 SS will be acceptable providing the material meets all other A1011 SS requirements and the requirements of this item.

GENERAL NOTES:

Clamp-on details are used for the second arm on dual mast arm assemblies. A Maximum 1 ½" wide vertical slotted hole shall be cut in the front clamp plate to facilitate drainage during galvanizing. The slot shall be centered behind the arm and shall be no longer than the arm diameter minus 1"

Fixed mount details are used for single mast arm assemblies and for the first arm on dual mast arm assemblies.

Where duplicate parts occur on a detail, welds shown for one part shall apply to all similar parts on the detail.

Pin bolts are required to prevent rotation of clamp-on arms under design wind forces.

NOTE:

Pin bolts shall be A325 with threads excluded from the shear plane. Pin bolt and ¾" dia pipe shall have 5/16" dia holes for a 1/8" dia galvanized cotter pin. Back clamp plate shall be furnished with a ¾" dia hole for each pin bolt. An 11/16" dia hole for each pin bolt shall be field drilled through the pole after arm orientations have been approved by the Engineer.

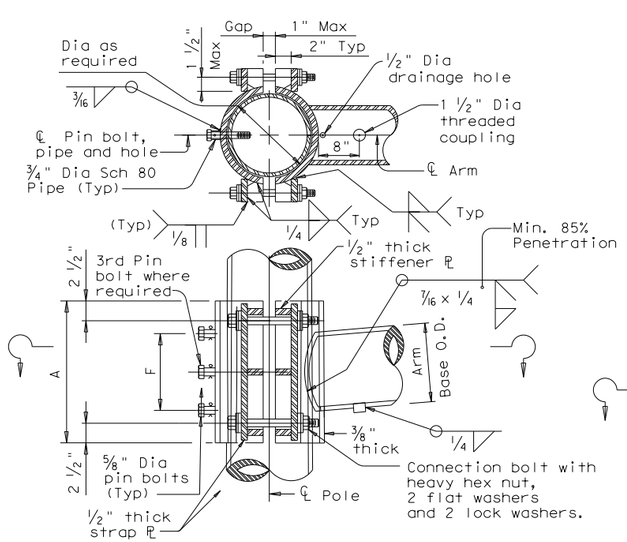

CLAMP-ON DETAIL 1

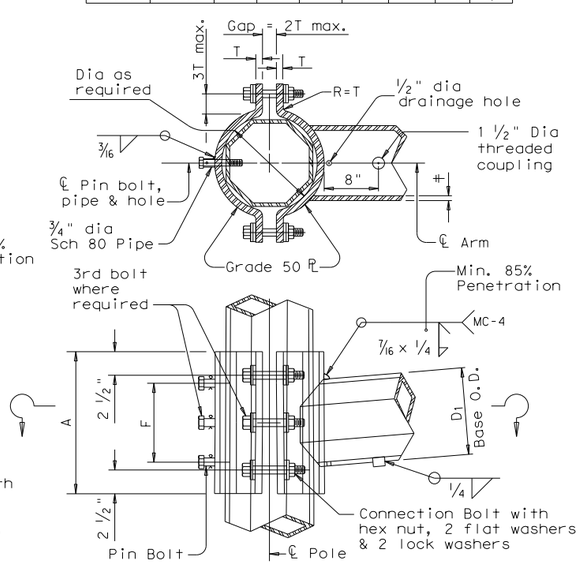

CLAMP-ON DETAIL 2

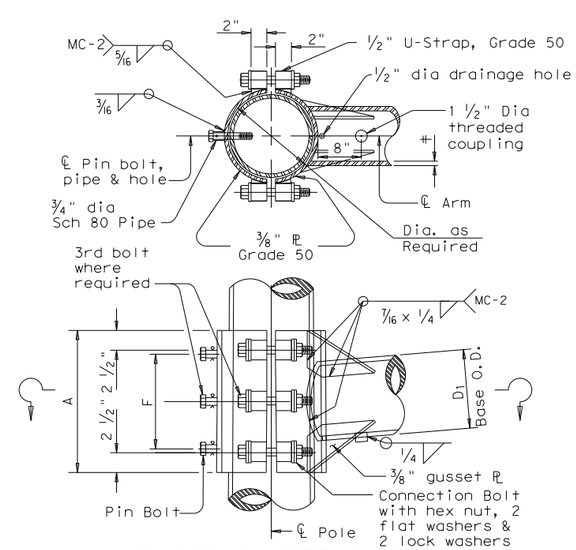

CLAMP-ON DETAIL 3

Texas Department of Transportation
Traffic Operations Division

STANDARD ASSEMBLY FOR TRAFFIC SIGNAL SUPPORT STRUCTURES

MAST ARM CONNECTIONS

MA-C-12

©TxDOT August 1995

DN: MS	CK: JSY	DW: MMF	CK: JSY
CONT	SECT	JOB	HIGHWAY
DIST	COUNTY		SHEET NO.
			464

REVISIONS
5-96
5-09
1-12

126A

DATE:
FILE:

DISCLAIMER: The use of this standard is governed by the "Texas Engineering Practice Act". No warranty of any kind is made by TxDOT for any purpose whatsoever. TxDOT assumes no responsibility for the conversion of this standard to other formats or for incorrect results or damages resulting from its use.

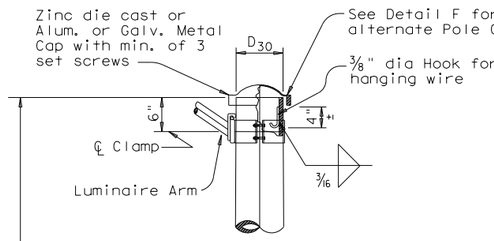

DETAIL A

(for pole with luminaire)

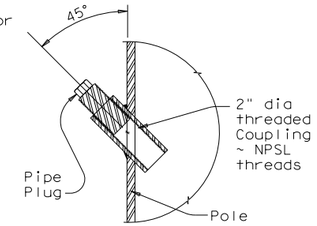

POLE COUPLING DETAIL

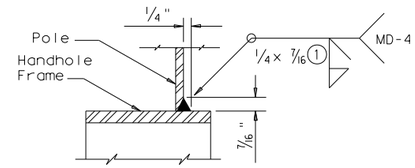

DETAIL G

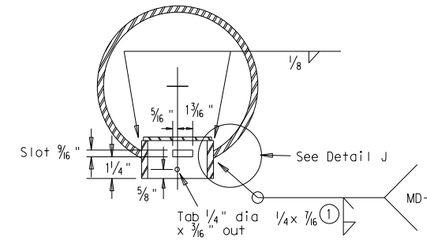

SECTION X-X

Opening for access compartment shall be no more than 1/16 inch wider than the access compartment itself.

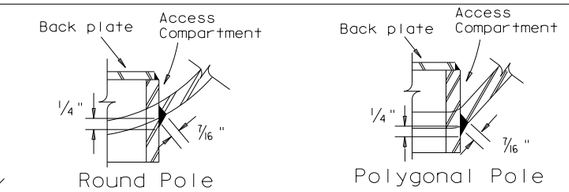

DETAIL J

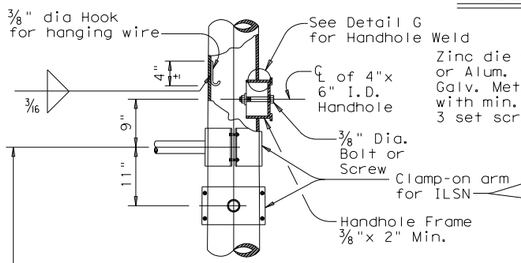

DETAIL B

(If ILSN applied)

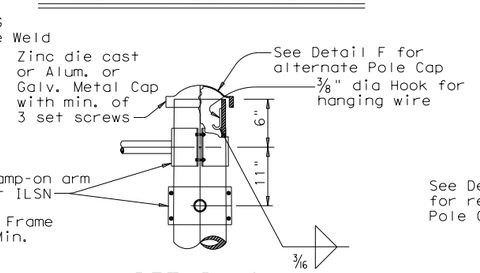

DETAIL C

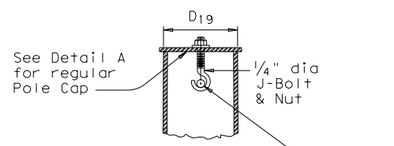

SECTION Y-Y

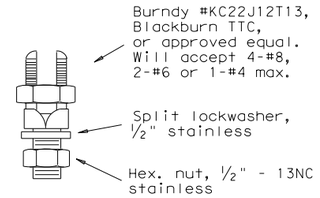

COPPER GROUND CONNECTOR

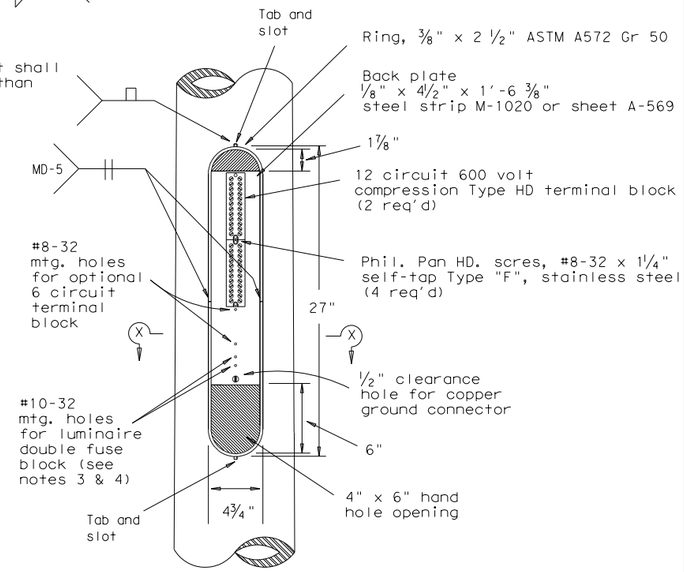

ACCESS COMPARTMENT

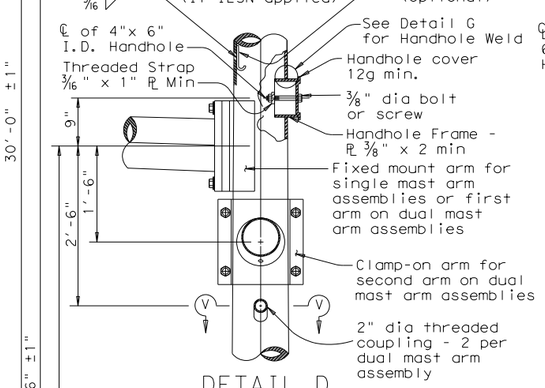

DETAIL D

(for 30' pole with luminaire and ILSN sign)

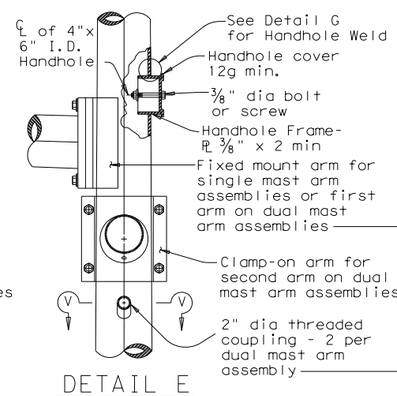

DETAIL E

(for 24' pole with ILSN sign and no luminaire)

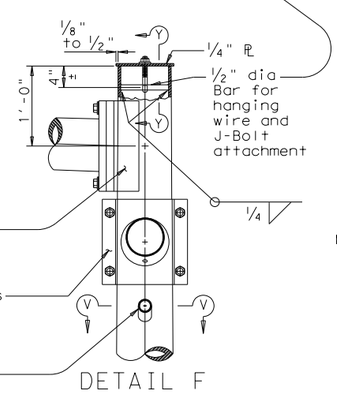

DETAIL F

(for 19' pole with no ILSN sign and no luminaire)

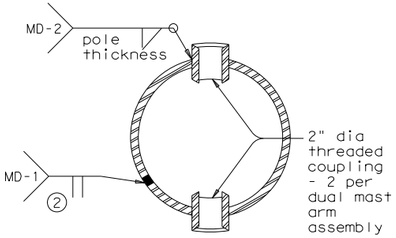

SECTION V-V

NOTES:

1. The cover shall be one piece formed from ABS plastic, shall be a pearl gray color, and shall be suitable for exposure to harsh sunlight and extreme weather. Cover shall latch with two screw latches and shall fit tightly to the enclosure ring to create a rainproof seal. Latch screws shall be 1/4-20 stainless flat socket head screws with tamper proof feature.

2. The pole manufacturer shall provide with each pole a separate kit consisting of: one cover with two latching assemblies, two terminal strips (Marathon #985GP12CU or approved equal), four #8-32 x 1 1/4" self tapping type "F" stainless steel pan head screws, and one ground connector (Blackburn TTC, Burndy KC22J12T13, or Ilsco SSS-5). The traffic signal contractor shall install the kit items in the field.

3. The screw hole spacing on the enclosure back plate shall be for two Marathon #985GP12 terminal strips, one Marathon #985GP06CU terminal strip, and one Bussmann #BM6032B fuse block.

4. Install one Bussmann #BM6032B, Littelfuse #L60030M-2C, or Ferraz-Shawmut #30352 fuse block for poles where luminaires are to be installed.

Anchor Bolt Diameter	Bolt Hole Diameter	Slot Length	Bolt Circle Diameter	Base PL Dim. L x T	Adjust. Range
1 1/2"	1 3/4"	3 1/2"	17"	18" x 1 1/2"	13.4°
1 3/4"	2"	4"	19"	20" x 1 3/4"	13.5°
2"	2 1/4"	4 1/2"	21"	22" x 2"	13.6°
2 1/4"	2 1/2"	5"	23"	24" x 2 1/4"	13.7°

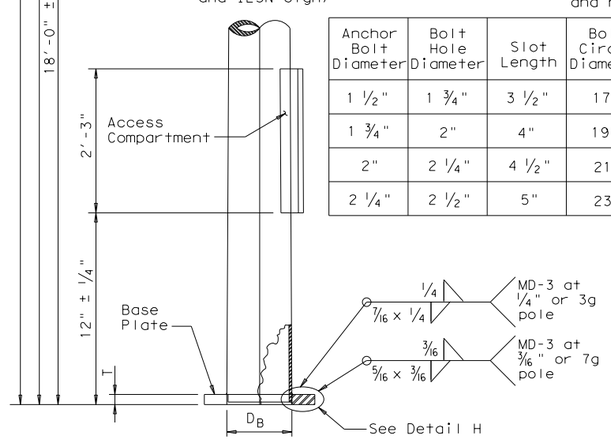

POLE ELEVATION

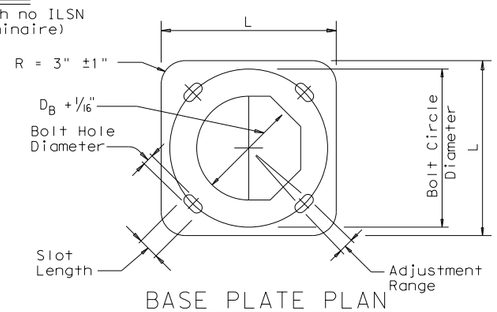

BASE PLATE PLAN

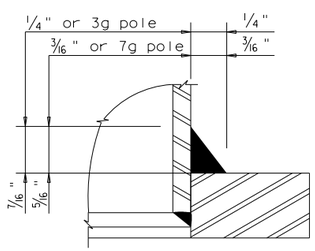

DETAIL H

(1) 85% Min. penetration

(2) 60% Min. penetration 100% pemetration within 6" of circumferential base welds.

Texas Department of Transportation
Traffic Operations Division

TRAFFIC SIGNAL SUPPORT STRUCTURES MAST ARM POLE DETAILS

MA-D-12

© TxDOT August 1995

DN: MS	CK: JSY	DW: FDN	CK: CAL
CONT	SECT	JOB	HIGHWAY
DIST	COUNTY		SHEET NO.
			465

REVISIONS
8-99
1-12

DATE:
FILE:

DISCLAIMER: The use of this standard is governed by the "Texas Engineering Practice Act". No warranty of any kind is made by TxDOT for any purpose whatsoever. TxDOT assumes no responsibility for the conversion of this standard to other formats or for incorrect results or damages resulting from its use.

FOUNDATION DESIGN TABLE

FDN TYPE	DRILLED SHAFT DIA	REINFORCING STEEL: VERT BARS	REINFORCING STEEL: SPIRAL & PITCH	EMBEDDED DRILLED SHAFT LENGTH-ft (4), (5), (6): TEXAS CONE PENETROMETER N blows/ft: 10	15	40	ANCHOR BOLT DESIGN (1): ANCHOR BOLT DIA	Fy (ksi)	BOLT CIR DIA	ANCHOR TYPE	FOUNDATION DESIGN LOAD (2): MOMENT K-ft	SHEAR Kips	TYPICAL APPLICATION
24-A	24"	4- #5	#2 at 12"	5.7	5.3	4.5	¾"	36	12 ¾"	1	10	1	Pedestal pole, pedestal mounted controller.
30-A	30"	8- #9	#3 at 6"	11.3	10.3	8.0	1 ½"	55	17"	2	87	3	Mast arm assembly. (see Selection Table)
36-A	36"	10- #9	#3 at 6"	13.2	12.0	9.4	1 ¾"	55	19"	2	131	5	Mast arm assembly. (see Selection Table) 30' strain pole with or without luminaire.
36-B	36"	12- #9	#3 at 6"	15.2	13.6	10.4	2"	55	21"	2	190	7	Mast arm assembly. (see Selection Table) Strain pole taller than 30' & strain pole with mast arm
42-A	42"	14- #9	#3 at 6"	17.4	15.6	11.9	2 ¼"	55	23"	2	271	9	Mast arm assembly. (see Selection Table)

NOTES:

(1) Anchor bolt design develops the foundation capacity given under Foundation Design Loads.

(2) Foundation Design Loads are the allowable moments and shears at the base of the structure.

(3) Foundations may be listed separately or grouped according to similarity of location and type. Quantities are for the Contractor's information only.

(4) Field Penetrometer readings at a depth of approximately 3 to 5 feet may be used to adjust shaft lengths.

(5) If rock is encountered, the Drilled Shaft shall extend a minimum of two diameters into solid rock.

(6) Decimal lengths in Design Table are to allow interpolation for other penetrometer values. Round to nearest foot for entry into Summary Table.

FOUNDATION SUMMARY TABLE (3)

LOCATION IDENTIFICATION	AVG. N BLOW /ft.	FDN TYPE	NO. EA	DRILLED SHAFT LENGTH (6) (FEET): 24-A	30-A	36-A	36-B	42-A
TALLEY ROAD AT WISEMAN BOULEVARD								
POLES B,C,F	*	24-A	3	18				
POLES E	*	30-A	1		11			
POLES A,D	*	36-A	2			26		
TOTAL DRILLED SHAFT LENGTHS				18	11	26		

*ASSUMED N VALUE OF 10. CONTRACTOR TO FIELD VERIFY.

FOUNDATION SELECTION TABLE FOR STANDARD MAST ARM PLUS ILSN SUPPORT ASSEMBLIES (ft)

		FDN 30-A	FDN 36-A	FDN 36-B	FDN 42-A
80 MPH DESIGN WIND SPEED	MAX SINGLE ARM LENGTH	32'	48'		
	MAXIMUM DOUBLE ARM LENGTH COMBINATIONS	24' X 24'			
		28' X 28'			
		32' X 28'	32' X 32'		
			36' X 36'		
			40' X 36'		
			44' X 28'	44' X 36'	
100 MPH DESIGN WIND SPEED	MAX SINGLE ARM LENGTH		36'	44'	
	MAXIMUM DOUBLE ARM LENGTH COMBINATIONS		24' X 24'		
			28' X 28'		
			32' X 24'	32' X 32'	
				36' X 36'	
				40' x24'	40' X 36'
					44' x 36'

EXAMPLE:
1. For 80mph design wind speed, foundation 30-A can support up to a 32' arm with another arm up to 28'
2. For 100mph design wind speed, foundation 36-A can support a single 36' mast arm.

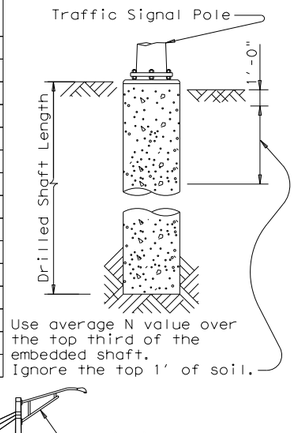

ANCHOR BOLT & TEMPLATE SIZES

BOLT DIA IN.	(7) BOLT LENGTH	TOP THREAD	BOTTOM THREAD	BOLT CIRCLE	R2	R1
¾"	1'-6"	3"	—	12 ¾"	7 ⅛"	5 ⅝"
1 ½"	3'-4"	6"	4"	17"	10"	7"
1 ¾"	3'-10"	7"	4 ½"	19"	11 ¼"	7 ¾"
2"	4'-3"	8"	5"	21"	12 ½"	8 ½"
2 ¼"	4'-9"	9"	5 ½"	23"	13 ¾"	9 ¼"

(7) Min dimensions given, longer bolts are acceptable.

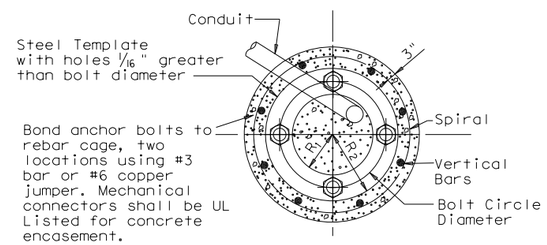

TOP VIEW

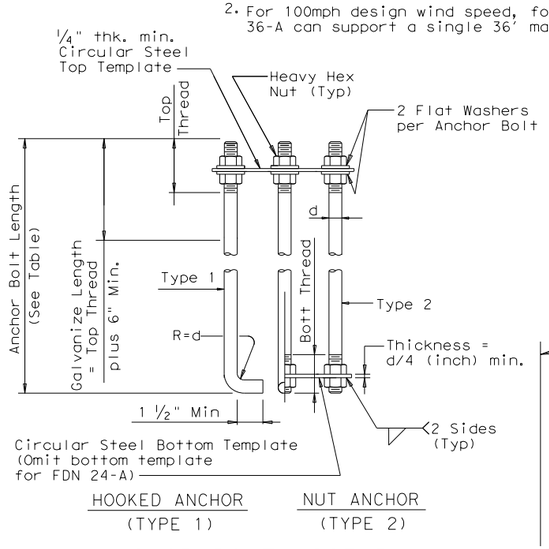

ANCHOR BOLT ASSEMBLY

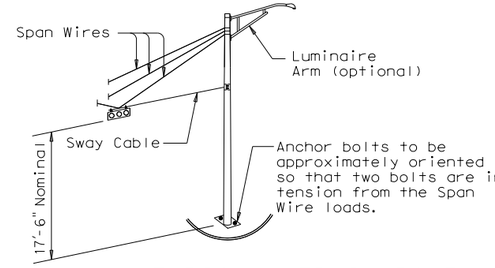

TYPICAL STRAIN POLE ASSEMBLY

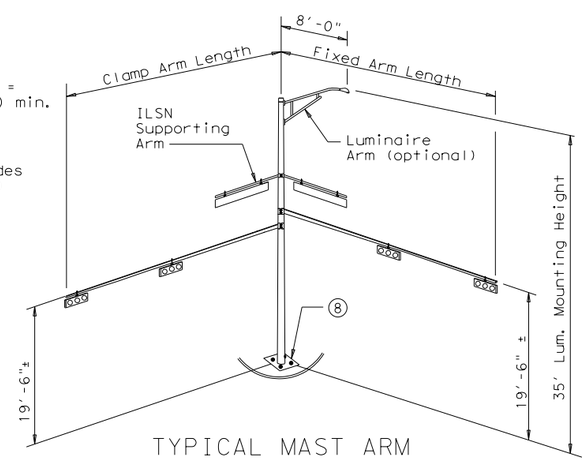

(8) Orient anchor bolts orthogonal with the fixed arm direction to ensure that two bolts are in tension under dead load.

TYPICAL MAST ARM ASSEMBLY

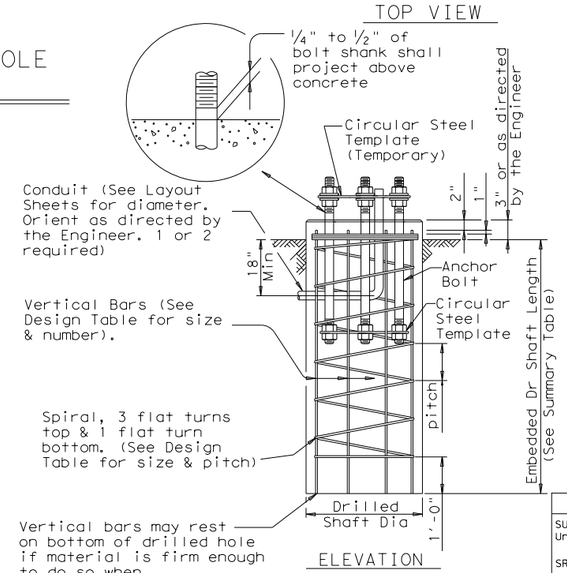

ELEVATION

FOUNDATION DETAILS

GENERAL NOTES:

Design conforms to 1994 AASHTO Standard Specifications for Structural Supports for Highway Signs, Luminaires and Traffic Signals and interim revisions thereto.

Reinforcing steel shall conform to Item 440, "Reinforcing Steel".

Concrete shall be Class "C".

Threads for anchor bolts and nuts shall be rolled or cut threads of 8UN series up to 2" in diameter or UNC series for all sizes. Bolts and nuts shall have Class 2A and 2B fit tolerances. Galvanized nuts shall be tapped after galvanizing.

Anchor bolts that are larger than 1" in diameter shall conform to "alloy steel" or "medium-strength mild steel" per Item 449, "Anchor Bolts". Anchor bolts that are 1" in diameter or less shall conform to ASTM A36. Galvanize a minimum of the top end thread length plus 6" for all anchor bolts unless otherwise noted. Exposed washers and exposed nuts shall be galvanized. All galvanizing shall be in accordance with Item 445, "Galvanizing".

Templates and embedded nuts need not be galvanized. Lubricate and tighten anchor bolts when erecting the structure in accordance with Item 449, "Anchor Bolts".

PRELIMINARY - 90%
SUBMITTED FOR INTERIM REVIEW
Under the authority of:
SRIRAM NATARAJAN, P.E. No. 91090
DATE: FEBRUARY, 2017 IT IS NOT TO BE USED FOR CONSTRUCTION, BIDDING OR PERMIT PURPOSES

Texas Department of Transportation
Traffic Operations Division

TRAFFIC SIGNAL POLE FOUNDATION

TS-FD-12

©TxDOT August 1995

DN: MS	CK: JSY	DW: MAO/MMF	CK: JSY/TEB
CONT	SECT	JOB	HIGHWAY
DIST	COUNTY		SHEET NO. 466

REVISIONS: 5-96, 11-99, 1-12

DATE:
FILE:

DISCLAIMER: The use of this standard is governed by the "Texas Engineering Practice Act". No warranty of any kind is made by TxDOT for any purpose whatsoever. TxDOT assumes no responsibility for the conversion of this standard to other formats or for incorrect results or damages resulting from its use.

MATERIALS	
Pole or Arm Simplex	ASTM A27 Gr.65-35 or A148 Gr.80-50, A576 Gr.1021 ③, or A36 (Arm only)
Arm Pipes	ASTM A53 Gr.B, A501, A1008 HSLAS-F Gr.50 ④, or A1011 HSLAS-F Gr.50 ④
Arm Strut Plates ②	ASTM A36, A572 Gr.50 ④, or A588
Misc.	ASTM designations as noted

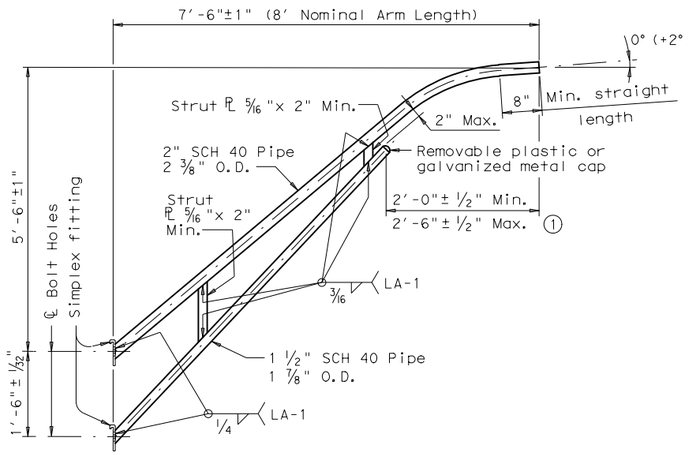

8-FOOT LUMINAIRE ARM

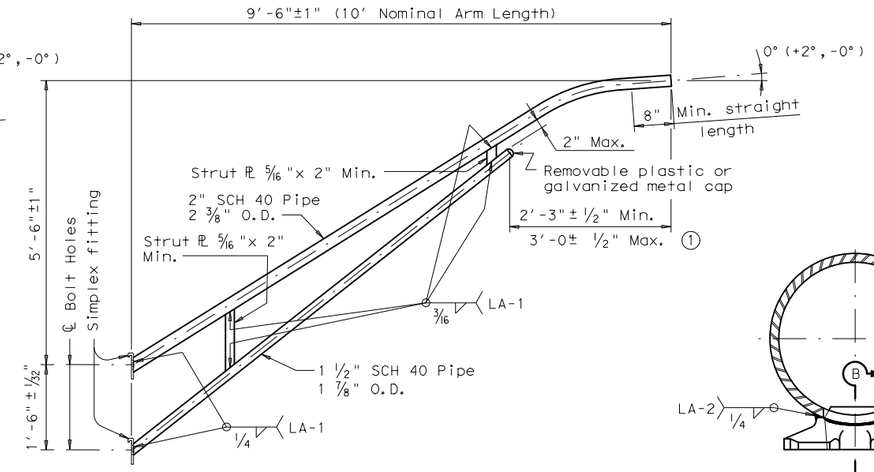

10-FOOT LUMINAIRE ARM

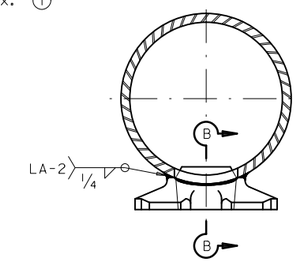

DIRECT ATTACHMENT DETAIL

① Dimensional limits are given to show acceptable variation in design. All of a Fabricator's production of a particular arm length shall have the same dimensions within specified tolerances.

② Any of the materials listed for plates may be used where the drawings do not specify a particular ASTM designation.

③ A576 must be suitable for forging and also meet minimum tensile strength of 65 ksi, minimum yield of 35 ksi, and elongation in 2 inches of 22 percent.

④ ASTM A572, A1008 HSLAS-F, and A1011 HSLAS-F may have higher yield strengths but shall not have less elongation than the grade indicated.

GENERAL NOTES:

Design conforms to 1994 AASHTO Standard Specifications for Structural Supports for Highway Signs, Luminaires, and Traffic Signals and Interim Revisions thereto. Design Wind Speed equals 90 mph plus a 1.3 gust factor. Arms are designed to support a 60 lb. luminaire having an effective projected area (actual area times drag coefficient) of 1.6 sq. ft.

Materials and fabrication shall be in accordance with Item 686, "Traffic Signal Pole Assemblies (Steel)" and with the details, dimensions, and weld procedures shown herein. Weld references call for preapproved weld procedures which the Fabricator must obtain prior to fabrication. In the absense of specified Fabricaton tolerances, dimensions shall be within the tolerances generally obtainable in normal fabrication practice.

Unless otherwise noted, all parts shall be galvanized after fabrication in accordance with Item 445, "Galvanizing".

Deviation from the details and dimensions shown herein require submission of shop drawings in accordance with Item 441, "Steel Structures". Alternate designs are not acceptable.

Each pole simplex fitting shall be supplied with 2 ASTM A325 bolts and 2 lock washers of the size specified. The bolts and lock washers shall be secured to the pole with the other hardware items called for in the plans. When clamp attachment is specified, the Fabricator shall ship the clamp assembly securely attached to the pole at the location shown on the plans.

If clamp assemblies are ordered without poles, the Fabricator shall ship one upper and one lower clamp assembly together in a single package, including all nuts and washers required for the clamps and simplex fittings.

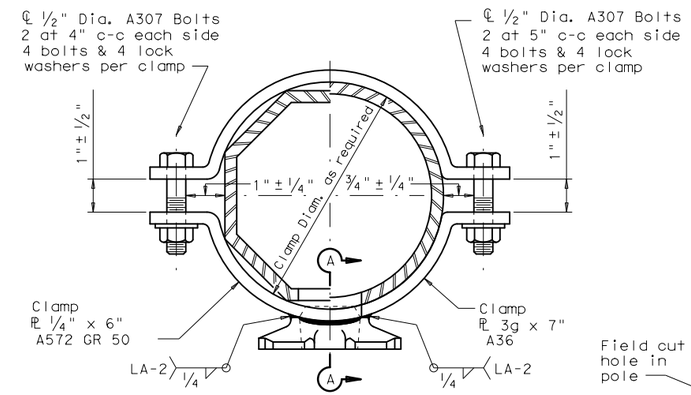

CLAMP ATTACHMENT DETAIL NO. 1 (HALF SECTION)

CLAMP ATTACHMENT DETAIL NO. 2 (HALF SECTION)

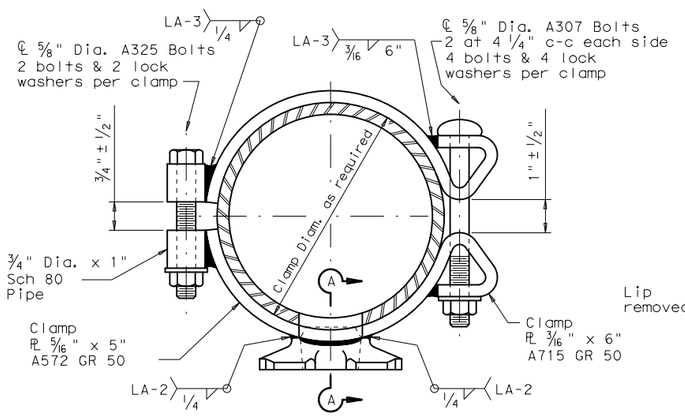

CLAMP ATTACHMENT DETAIL NO. 3 (HALF SECTION)

CLAMP ATTACHMENT DETAIL NO. 4 (HALF SECTION)

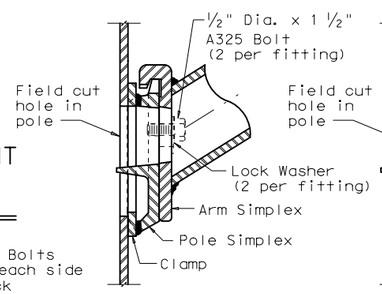

UPPER SIMPLEX FITTING

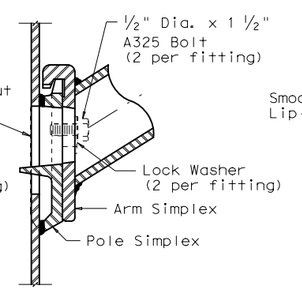

UPPER SIMPLEX FITTING

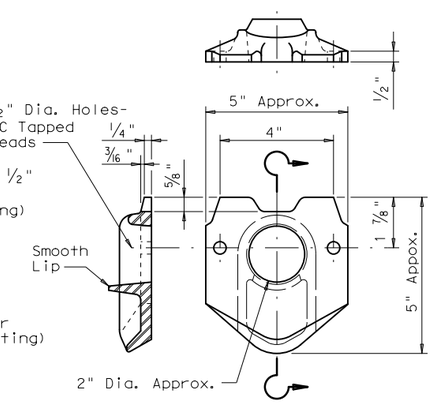

POLE SIMPLEX DETAIL

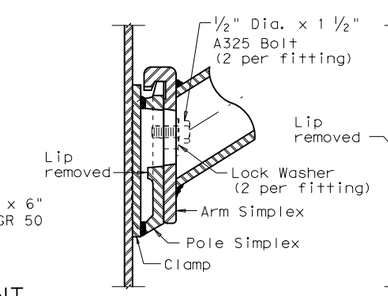

LOWER SIMPLEX FITTING

SECTON A-A

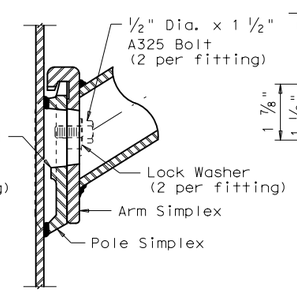

LOWER SIMPLEX FITTING

SECTON B-B

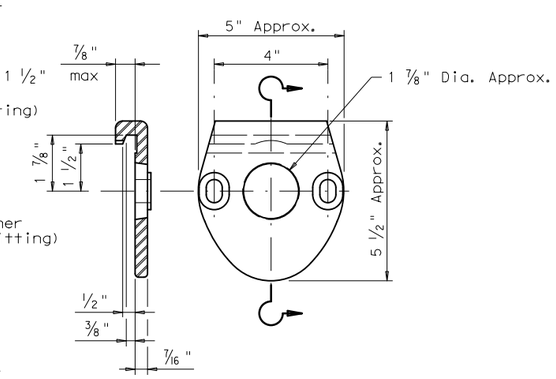

ARM SIMPLEX DETAIL

Texas Department of Transportation
Traffic Operations Division

STANDARD ASSEMBLY DRAWINGS FOR LUMINAIRE SUPPORT STRUCTURES

ARM DETAILS

LUM-A-12

© TxDOT August 1995

DN: LEH	CK: JSY	DW: LTT	CK: TEB
CONT	SECT	JOB	HIGHWAY
DIST	COUNTY		SHEET NO.
			467

REVISIONS
5-96
1-99
1-12

DATE:
FILE:

DISCLAIMER: The use of this standard is governed by the "Texas Engineering Practice Act". No warranty of any kind is made by TxDOT for any purpose whatsoever. TxDOT assumes no responsibility for the conversion of this standard to other formats or for incorrect results or damages resulting from its use.

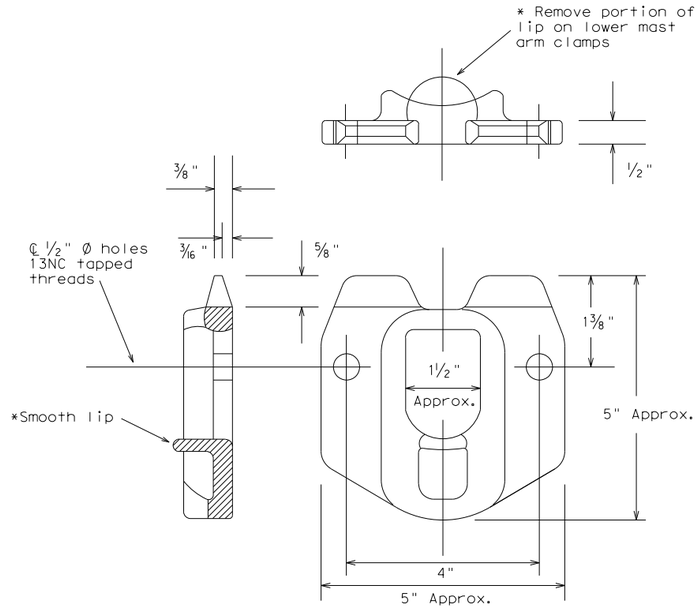

POLE SIMPLEX DETAILS

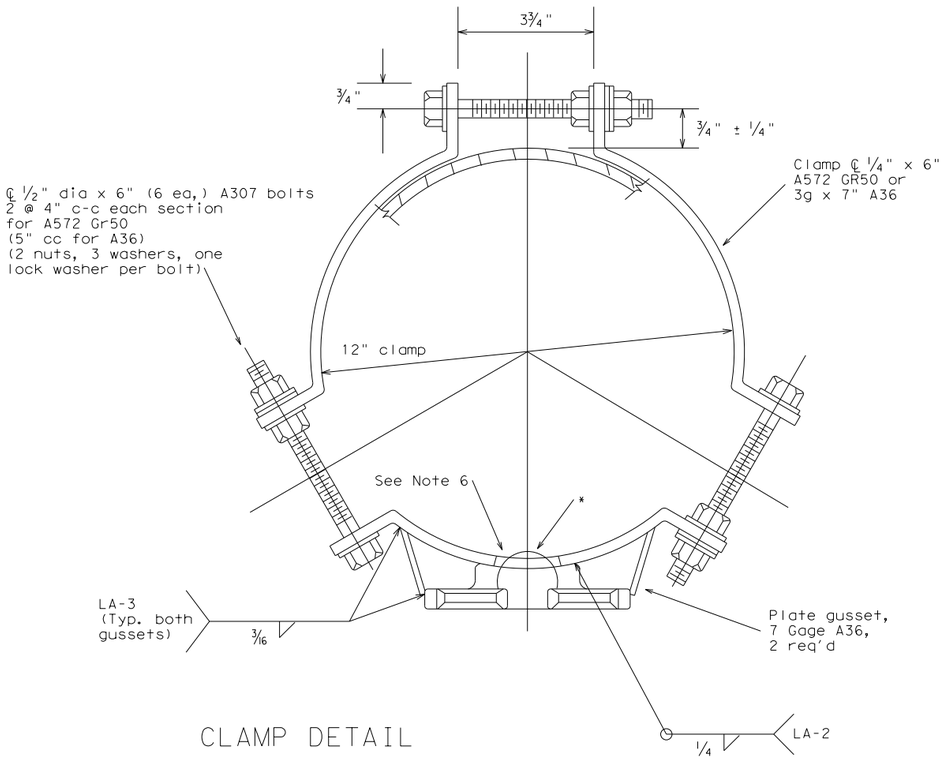

CLAMP DETAIL

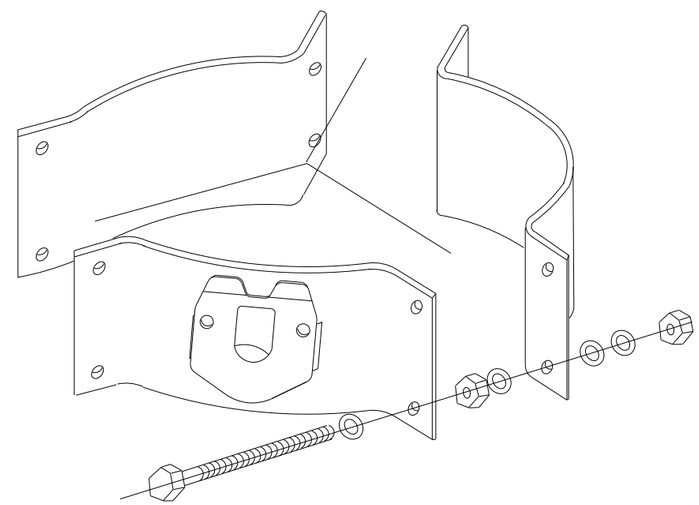

PROJECTION

OTHER MATERIALS:

1. Pole simplex shall be ASTM A27 GR65-35 or A148 GR80-50 or A576 GR1021. ASTM A576 must be suitable for forging and also meet minimum tensile of 65ksi, minimum yield of 35ksi, and a minimum elongation of 22 percent in 2 inches.
2. Welded tabs and backplates shall be ASTM A-36 steel or better.
3. Nylon insert locknuts shall conform to ASTM A563.

GENERAL NOTES:

1. Materials and fabrication shall be in accordance with Standard Sheet "MA-C" and with the details, dimensions, and weld procedures shown herein. Weld references call for preapproved weld procedures which the Fabricator must obtain prior to fabrication. In the absence of specified fabrication tolerances, dimensions shall be within the tolerances generally obtainable in normal fabrication practice.
2. All parts shall be galvanized after fabrication in accordance with Item 445, "Galvanizing". The throat of the Simplex shall be made free of all rough or sharp edges resulting from the galvanizing process.
3. Each simplex fitting shall be supplied with 2 ASTM A325 bolts, 1/2in. X 1 1/2in. and 2 lock washers. The bolts and lock washers shall be secured to the clamp with the other hardware items. The Fabricator shall ship clamp assembly together in a single package, including all bolts, nuts, and washers required for the clamp and simplex fitting.
4. Design conforms to 1994 AASHTO "Standard Specifications for Structural Supports for Highway Signs, Luminaires, and Traffic Signals" and interim revisions thereto. Design Wind Speed equals 80 mph plus a 1.3 gust factor. Clamps are designed to support a 60 lb. luminaire having an effective projected area (actual area times drag coefficient) of 1.6 sq.ft.,12 ft. maximum arm length.
5. Each assembly shall consist of one upper piece simplex fitting having a smooth lip and one lower piece simplex fitting with the lip removed.
6. Approximately 2 in. diameter hole in upper mast arm clamp.

For 8.9 - 12 inch diameter Signal Poles
(Two req'd for each mast arm)

Texas Department of Transportation
Traffic Operations Division

CLAMP ON
FITTING ASSEMBLY FOR
LUMINAIRE MAST ARM

CFA-12

© TxDOT	DN: KAB	CK: RES	DW: FDN	CK: CAL
REVISIONS	CONT	SECT	JOB	HIGHWAY
11-99 1-12				
	DIST	COUNTY		SHEET NO.
				468

DATE:
FILE:

DISCLAIMER:
The use of this standard is governed by the "Texas Engineering Practice Act". No warranty of any kind is made by TxDOT for any purpose whatsoever. TxDOT assumes no responsibility for the conversion of this standard to other formats or for incorrect results or damages resulting from its use.

GENERAL NOTES FOR ALL ELECTRICAL WORK

1. The location of all conduits, junction boxes, ground boxes, and electrical services is diagrammatic and may be shifted to accommodate field conditions.

2. Provide new and unused materials. Ensure that all materials and installations comply with the applicable articles of the National Electrical Code (NEC), TxDOT standards and specifications, National Electrical Manufacturers Association (NEMA), and are listed by Underwriters Laboratories (UL) or a Nationally Recognized Testing Lab (NRTL). NRTLs such as Canadian Standard Association (CSA), Intertek Testing Services NA Inc., or FM Approvals LLC can be considered equivalent to UL. Where reference is made to NEMA listed devices, International Electrotechnical Commission (IEC) listed devices will not be considered an acceptable equal to a NEMA listed device. Acceptable devices may have both a NEMA and IEC listing. Faulty fabrication or poor workmanship in any material, equipment, or installation is justification for rejection. Replace or reinstall rejected material or equipment at no additional cost to the Department.

3. Miscellaneous nuts, bolts and hardware, except for high strength bolts, may be stainless steel when plans specify galvanized, provided the bolt size is ½ in. or less in diameter.

4. Provide the following test equipment as required by the Engineer to confirm compliance with the contract and the NEC: voltmeter, ammeter, megohm meter (1000 volt DC), ground resistance tester, torque wrenches, and torque screwdrivers. Ensure all equipment has been properly calibrated within the last year. Provide calibration certification to the Engineer upon request. Operate test equipment during inspection as requested by the Engineer.

5. Install grounding as shown on the plans and in accordance with the NEC. Ensure all metallic conduits; metal poles; luminaires; and metal enclosures are bonded to the equipment grounding conductor. Provide stranded bare copper or green insulated grounding conductors. Ground rods, connectors, and bonding jumpers are subsidiary to the various bid items.

6. When required by the Engineer, notify the Department in writing of materials from the Material Producers List (MPL) intended for use on each project. Prequalified materials are listed on the MPL on TxDOT's website under "Roadway Illumination and Electrical Supplies." No substitutions will be allowed for materials on this list.

CONDUIT

A. MATERIALS

1. Provide conduit, junction boxes, fittings, and hardware as per TxDOT Departmental Material Specification (DMS) 11030 "Conduit" and Item 618 "Conduit" of TxDOT's "Standard Specifications For Construction And Maintenance Of Highways, Streets, And Bridges," latest edition. Provide conduits listed under Item 618 on the MPL under "Roadway Illumination and Electrical Supplies." Provide conduit types according to the descriptive code or as shown on the plans. Do not substitute other types of conduits for those shown. Provide liquidtight flexible metal conduit (LFMC) when flexible conduit is called for on galvanized steel rigid metallic conduit (RMC) systems. Provide liquidtight flexible nonmetallic conduit (LFNC) when flexible conduit is called for on polyvinyl chloride (PVC) systems.

2. Provide galvanized steel RMC for all exposed conduits, unless otherwise shown on the plans. Properly bond all metal conduits.

3. Unless otherwise shown on the plans, provide junction boxes with a minimum size as shown in the following table, which applies to the greatest number of conductors entering the box through one conduit with no more than four conduits per box. When a mixture of conductor sizes is present, count the conductors as if all are of the larger size. For situations not applicable to the table, size junction boxes in accordance with NEC.

AWG	3 CONDUCTORS	5 CONDUCTORS	7 CONDUCTORS
#1	10" x 10" x 4"	12" x 12" x 4"	16" x 16" x 4"
#2	8" x 8" x 4"	10" x 10" x 4"	12" x 12" x 4"
#4	8" x 8" x 4"	10" x 10" x 4"	10" x 10" x 4"
#6	8" x 8" x 4"	8" x 8" x 4"	10" x 10" x 4"
#8	8" x 8" x 4"	8" x 8" x 4"	8" x 8" x 4"

4. Junction boxes with an internal volume of less than 100 cu. in. and supported by entering raceways must have threaded entries or hubs identified for the intended purpose and supported by connection of two or more rigid metal conduits. Secure conduit within 3 ft. of the enclosure or within 18 in. of the enclosure if all conduit entries are on the same side. Mechanically secure all junction boxes with an internal volume greater than 100 cu. inches.

5. Provide hot dipped galvanized cast iron or sand cast aluminum outlet boxes for junction boxes containing only 10 AWG or 12 AWG conductors. Do not use die cast aluminum boxes. Size outlet boxes according to the NEC.

6. Do not use intermediate metal conduit (IMC) or electrical metallic tubing (EMT) unless specifically required by the plan sheets. When EMT is called for, provide junction boxes made from galvanized steel sheeting, listed and approved for outdoor use, unless otherwise noted on the plans. Size all galvanized steel junction boxes in accordance with the NEC. Provide junction boxes for IMC conduit systems that meet the same requirements for junction boxes used with RMC systems.

7. Provide PVC junction boxes intended for outdoor use on PVC conduit systems, unless otherwise noted on the plans.

8. Provide PVC elbows in PVC conduit systems, unless otherwise shown on the plans. Use only a flat, high tensile strength polyester fiber pull tape for pulling conductors through the PVC conduit system. When galvanized steel RMC elbows are specifically called for in the plans and any portion of the RMC elbow is buried less than 18 in., ground the RMC elbow by means of a grounding bushing on a rigid metal extension. Grounding of the rigid metal elbow is not required if the entire RMC elbow is encased in a minimum of 2 in. of concrete. PVC extensions are allowed on these concrete encased rigid metal elbows. RMC or PVC elbows are subsidiary to various bid items.

9. When required, provide High-Density Polyethylene (HDPE) conduit with factory installed internal conductors according to Item 622 "Duct Cable." At the Contractor's request and with approval by the Engineer, substitute HDPE conduit with no conductors for bored schedule 40 or schedule 80 PVC conduit bid under Item 618. Ensure bored HDPE substituted for PVC is schedule 40 and of the same size PVC called for in the plans. Ensure the substituted HDPE meets the requirements of Item 622, except that the conduit is supplied without factory-installed conductors. Make the transition of the HDPE conduit to PVC (or RMC elbow when required) at the bore pit. Provide conduit of the size and schedule as shown on the plans. Do not extend substituted conduit into ground boxes or foundations. Provide PVC or galvanized steel RMC elbows as called for at all ground boxes and foundations.

10. Use two-hole straps when supporting 2 in. and larger conduits. On electrical service poles, properly sized stainless steel or hot dipped galvanized one-hole standoff straps are allowed on the service riser conduit.

B. CONSTRUCTION METHODS

1. Provide and install expansion joint conduit fittings on all structure-mounted conduits at the structure's expansion joints to allow for movement of the conduit. In addition, provide and install expansion joint fittings on all continuous runs of galvanized steel RMC conduit externally exposed on structures such as bridges at maximum intervals of 150 ft. When requested by the project Engineer, supply manufacturer's specification sheet for expansion joint conduit fittings. Repair or replace expansion joint fittings that do not allow for movement at no additional cost to the Department. Provide the method of determining the amount of expansion to the Engineer upon request. Do not use LFMC or LFNC as a substitute for the required expansion conduit fittings.

2. Space all conduit supports at maximum intervals of 5 ft. Install conduit spacers when attaching metal conduit to surface of concrete structures. See "Conduit Mounting Options" on ED(2). Install conduit support within 3 ft. of all enclosures and conduit terminations.

3. Do not attach conduit supports directly to pre-stressed concrete beams except as shown specifically in the plans or as approved by the Engineer.

4. Unless otherwise shown on the plans, jack or bore conduit placed beneath existing roadways, driveways, sidewalks, or after the base or surfacing operation has begun. Backfill and compact the bore pits below the conduit per Item 476 "Jacking, Boring, or Tunneling Pipe or Box" prior to installing conduit or duct cable to prevent bending of the connections.

5. When placing conduit in the sub-grade of new roadways, backfill all trenches with excavated material unless otherwise noted on the plans. When placing conduit in the sub-base of new roadways, backfill all trenches with cement-stabilized base as per requirements of Items 110 "Excavation", 400 "Excavation and Backfill for Structures", 401 "Flowable Backfill", 402 "Trench Excavation Protection", and 403 "Temporary Special Shoring."

6. Provide and place warning tape approximately 10 in. above all trenched conduit as per Item 618.

7. During construction, temporarily cap or plug open ends of all conduit and raceways immediately after installation to prevent entry of dirt, debris and animals. Temporary caps constructed of durable duct tape are allowed. Tightly fix the tape to the conduit opening. Clean out the conduit and prove it clear in accordance with Item 618 prior to installing any conductors.

8. Ensure conduit entry into the top of any enclosure is waterproof by installing conduit sealing hubs or using boxes with threaded bosses. This includes surface mounted safety switches, meter cans, service enclosures, auxiliary enclosures and junction boxes. Grounding bushings on water tight sealing hubs are not required.

9. Fit the ends of all PVC conduit terminations with bushings or bell end fittings. Provide and install a grounding type bushing on all metal conduit terminations.

10. Install a bonding jumper from each grounding bushing to the nearest ground rod, grounding lug, or equipment grounding conductor. Ensure all bonding jumpers are the same size as the equipment grounding conductor. Bonding of conduit used as a casing under roadways for duct cable is not required, if the duct extends the full length through the casing.

11. At all electrical services, install a 6 AWG solid copper grounding electrode conductor.

12. Place conduits entering ground boxes so that the conduit openings are between 3 in. and 6 in. from the bottom of the box. See the ground box detail on sheet ED(4).

13. Seal ends of all conduits with duct seal, expandable foam, or by other methods approved by the Engineer. Seal conduit immediately after completion of conductor installation and pull tests. Do not use duct tape as a permanent conduit sealant. Do not use silicone caulk as a conduit sealant.

14. File smooth the cut ends of all mounting strut and conduit. Before installing, paint the field cut ends of all mounting strut and RMC (threaded or non-threaded) with zinc rich paint (94% or more zinc content) to alleviate overspray. Use zinc rich paint to touch up galvanized material as allowed under Item 445 "Galvanizing." Do not paint non-galvanized material with a zinc rich paint as an alternative for materials required to be galvanized.

Texas Department of Transportation

Traffic Operations Division Standard

ELECTRICAL DETAILS CONDUITS & NOTES

ED(1)-14

FILE:	ed1-14.dgn	DN:	CK:	DW:	CK:
© TxDOT	October 2014	CONT	SECT	JOB	HIGHWAY
	REVISIONS				
		DIST	COUNTY		SHEET NO.
					469

71A

DATE:
FILE:

DISCLAIMER:
The use of this standard is governed by the "Texas Engineering Practice Act". No warranty of any kind is made by TxDOT for any purpose whatsoever. TxDOT assumes no responsibility for the conversion of this standard to other formats or for incorrect results or damages resulting from its use.

ELECTRICAL CONDUCTORS

A. MATERIAL INFORMATION

1. Provide Type XHHW insulated conductors in accordance with Departmental Material Specification (DMS)11040 "Conductors" and Item 620 "Electrical Conductors." Provide conductors as listed on the Material Producers List (MPL) on the Department web site under "Roadway Illumination and Electrical Supplies" Item 620. Color code insulated conductors in conformance with the NEC. Identify grounded (neutral) conductors with white insulation. Identify grounding conductors (ground wires) with green insulation or bare conductors. Identify ungrounded (hot) conductors with any color insulation except green, white, or gray. Keep color scheme consistent throughout the wiring system. Identify conductors 6 American Wire Gauge (AWG) and smaller by continuous color jacket. Identify electrical conductors 4 AWG and larger by continuous color jacket or by colored tape. When identifying conductors with colored tape, mark at least 6 in. of the conductor's insulation with half laps of tape.

2. Provide a solid copper 6 AWG grounding electrode conductor to bond the electrical service equipment to the concrete encased grounding electrode or the ground rod at the service location. Connect the grounding electrode conductor to the ground rod with a UL listed connector in accordance with DMS 11040. Connect the grounding electrode conductor to the concrete encased grounding electrode as shown in the plans.

3. Where two or more circuits are present in one conduit or enclosure, permanently identify the conductors of each branch circuit by attaching a non-metallic tag around both circuit conductors at each accessible location. Provide tags with two straps, large enough to indicate circuit number, letter, or other identification as shown in the plans. Print circuit identification on the tag with a permanent marker.

4. Use listed compression or screw type pressure connectors, terminal blocks, or split bolt connectors for splicing as specified in DMS 11040. Use hot melt adhesive tape to fill the gap and seal the ends of heat shrink tubing. Provide UL listed gel-filled insulating splice covers. Splicing materials, insulating materials, breakaway disconnects, splice covers, and fuse holders are subsidiary to various bid items.

B. CONSTRUCTION METHODS

1. Use only a flat, high tensile strength polyester fiber pull tape for pulling conductors through the conduit system. After installing conductors in conduit, perform conductor pull test. If a conductor cannot be freely pulled, make any needed alterations or repairs at no additional cost to the department. Perform insulation resistance tests in accordance with Item 620. Coordinate with the Engineer to witness the tests.

2. Leave 2 ft. minimum, 3 ft. maximum length for each conductor up to the splice in ground boxes. Leave 3 ft. minimum, 4 ft. maximum length of conductor in ground boxes when pulled through with no splice. Leave 1 ft. minimum, 1.5 ft. maximum length of conductor at enclosures, weatherheads and pole bases.

3. Make splices only in junction boxes, ground boxes, pole bases, or electrical enclosures and use only listed compression or screw type pressure connectors, terminal blocks, or split bolt connectors. Insulate splices with heavy wall heat shrink tubing or gel-filled insulating splice covers to provide a watertight splice. Overlap conductor insulation with heat shrink tubing a minimum of 2 in. past both sides of the splice. Where heat shrink tubing may not shrink sufficiently to provide a watertight seal around the individual conductors, prior to heating the tubing, increase the diameter of the conductor insulation using hot melt adhesive tape to provide a watertight seal between the individual conductors and the heat shrink tubing. Ensure the tape extends past the heat shrink tubing. Use hot melt adhesive tape to fill the gap and seal the ends of heat shrink tubing. Heat shrink tubing that appears to have been burned, or overheated, is considered defective and must be replaced.

4. Size and install gel-filled insulating splice covers according to manufacturer's specifications when used in place of heat shrink tubing.

5. Wire nuts with factory applied waterproof sealant may be used for 8 AWG or smaller conductors in above ground junction boxes, but not in pole bases or ground boxes. Install wire nuts in an upright position to prevent the accumulation of water.

6. Support conductors in illumination poles with a J-hook at the top of the pole.

7. When terminating conductors, remove the insulation and jacketing material without nicking the individual strands of the conductor. Conductors with nicked individual conductor strands or removed strands will be considered damaged.

8. Replace conductors and cables that are damaged beyond repair or that fail an insulation resistance test at no additional cost to the department.

9. Do not repair damaged conductors with duct tape, electrical tape, or wire nuts. Use only approved splicing methods.

10. Do not terminate more than one conductor under a single connector, unless the connector is rated for multiple conductors. Do not exceed the pressure connector's listing for maximum number and size of conductors allowed.

11. Install breakaway connectors on conductors bid under Item 620 whenever those conductors pass through a breakaway support device. Follow manufacturer's instructions when terminating conductors to breakaway connectors. Properly torque threaded connections. Proper terminations are critical to the safe operation of breakaway devices. Trim waterproofing boots on breakaway connectors to fit snugly around the conductor to ensure waterproof connection. Only one conductor may enter a single opening in a boot. Provide waterproof boots with the correct number of openings. Leave unused openings factory sealed. Use prequalified breakaway connectors as shown on the MPL.

12. Provide and install a separate stranded equipment grounding conductor (EGC) in all conduits that contain circuit wiring of 50 volts or more. Unless shown elsewhere, size the EGC to be the same size as the largest current carrying conductor contained in the conduit. Ensure all EGCs are bonded together at every accessible location. For traffic signal installations, provide a minimum size 8 AWG EGC. The EGC is paid for under Item 620.

C. TEMPORARY WIRING

1. Install temporary conductors and electrical equipment in accordance with the NEC article "Temporary Installations" and Department standard sheets.

2. Provide a ground fault circuit interrupter (GFCI) for power outlets for portable electrical equipment, power tools, ice machines, ice storage bins and refrigerators located outdoors at grade. GFCI may be any one of the following: molded cord and plug set, receptacle, or circuit breaker type.

3. Use listed wire nuts with factory applied sealant for temporary wiring where approved.

4. Enclose conductor splices within a listed enclosure or ground box, or ensure the splices are more than 10 ft. above grade vertically and more than 5 ft. horizontally from any metal structure. Where installing temporary conductors in areas subject to vehicle traffic or mobile construction equipment, ensure the vertical clearance to ground is at least 18 ft. when measured at the lowest point. Ground messenger wires that support power conductors in conformance with the NEC.

5. Protect and when necessary repair any existing electrical conduits uncovered during the construction process in a timely manner and in conformance with the NEC.

GROUND RODS & GROUNDING ELECTRODES

A. MATERIAL INFORMATION

1. Provide and install a grounding electrode at electrical services. Provide ground rods according to DMS 11040 and the plans. Larger diameter or longer length rods may be called for in some specific locations, see the individual plans sheets. Concrete encased grounding electrodes may be called for in specific locations including electrical service, see individual plan sheets.

B. CONSTRUCTION METHODS

1. Furnish auxiliary ground rods for lightning protection and install in soil, concrete, or both, as called for in the plans. For ground rods installed in concrete, ensure the connection of the conductor to the ground rod is readily accessible for inspection or repairs. For ground rods installed in soil, ensure that the upper end is between 2 to 4 in. below finished grade.

2. Do not place ground rods in the same drilled hole as a timber pole.

3. Install ground rods so the imprinted part number is at the upper end of the rod.

4. Remove all non-conductive coatings such as concrete splatter from the rod at the clamp location.

5. Route all conductors as short and straight as possible for connection to lightning protection ground rods. When a bend is required, ensure a minimum radius bend of four inches for these conductors.

6. Unless otherwise called for in the plans, protect grounding electrode conductors with non-metallic conduit. When protecting grounding electrode conductors with metal conduit, provide and install a grounding type bushing and properly sized bonding jumper on each end of the metal conduit.

7. Written authorization is required before installing a ground rod in a horizontal trench for rocky soil or a solid rock bottom.

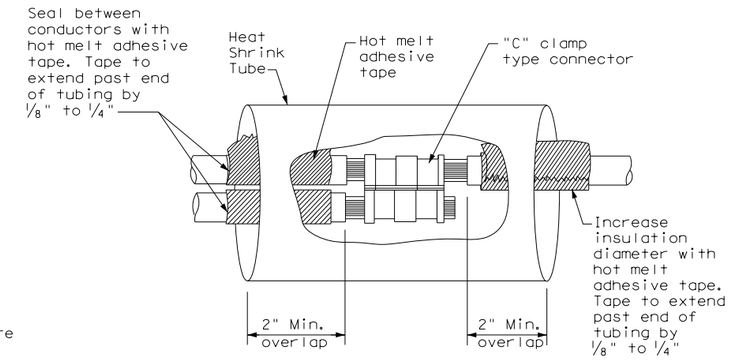

SPLICE OPTION 1
Compression Type

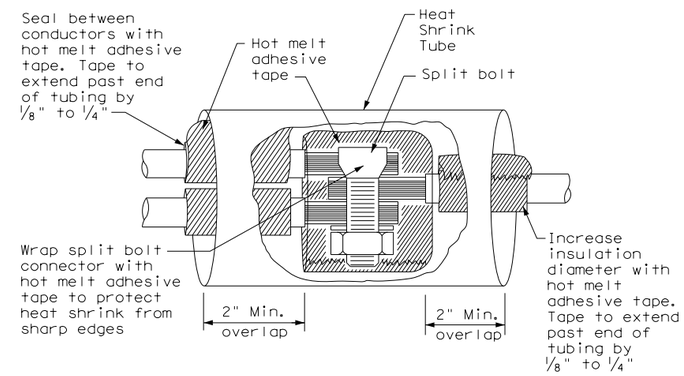

SPLICE OPTION 2
Split Bolt Type

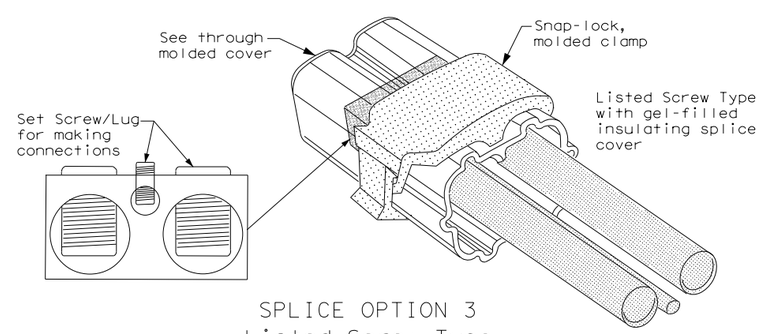

SPLICE OPTION 3
Listed Screw Type

Texas Department of Transportation
Traffic Operations Division Standard

ELECTRICAL DETAILS CONDUCTORS

ED(3)-14

FILE: ed3-14.dgn	DN: TxDOT	CK: TxDOT	DW: TxDOT	CK: TxDOT
© TxDOT October 2014	CONT	SECT	JOB	HIGHWAY
REVISIONS				
	DIST	COUNTY		SHEET NO.
				470

71C

DATE:
FILE:

DISCLAIMER:
The use of this standard is governed by the "Texas Engineering Practice Act". No warranty of any kind is made by TxDOT for any purpose whatsoever. TxDOT assumes no responsibility for the conversion of this standard to other formats or for incorrect results or damages resulting from its use.

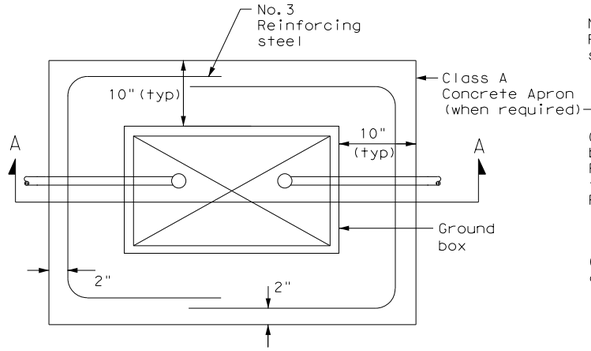

PLAN VIEW

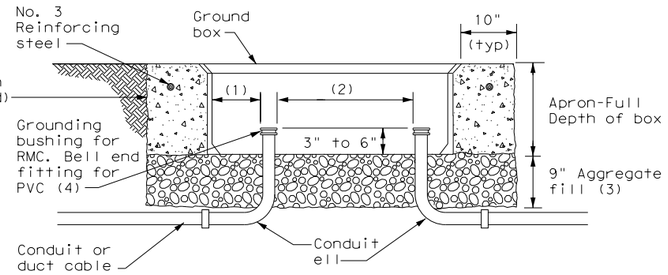

SECTION A - A

APRON FOR GROUND BOX

(1) Uniformly space ends of conduits within the ground box. Position ends of conduits so that ground box walls do not interfere with the installation of grounding bushings or bell end fittings.

(2) Maintain sufficient space between conduits to allow for proper installation of bushing.

(3) Place aggregate under the box, not in the box. Aggregate should not encroach on the interior volume of the box.

(4) Install a grounding bushing on the upper end of all RMC terminating in a ground box. Ground RMC elbows when any part of the elbow is less than 18 in. below the bottom of the ground box. Install a PVC bushing or bell end fitting on the upper end of all PVC conduits terminating in a ground box.

GROUND BOX DIMENSIONS	
TYPE	OUTSIDE DIMENSIONS (INCHES) (Width x Length X Depth)
A	12 X 23 X 11
B	12 X 23 X 22
C	16 X 29 X 11
D	16 X 29 X 22
E	12 X 23 X 17

GROUND BOX COVER DIMENSIONS								
TYPE	DIMENSIONS (INCHES)							
	H	I	J	K	L	M	N	P
A, B & E	23 1/4	23	13 3/4	13 1/2	9 7/8	5 1/8	1 3/8	2
C & D	30 1/2	30 1/4	17 1/2	17 1/4	13 1/4	6 3/4	1 3/8	2

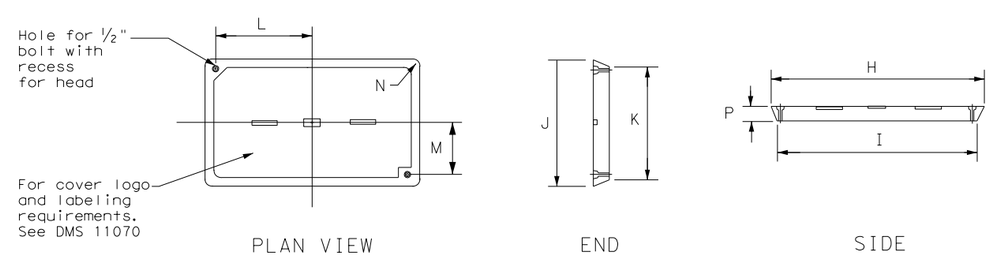

PLAN VIEW END SIDE

GROUND BOX COVER

GROUND BOXES

A. MATERIALS

1. Provide polymer concrete ground boxes measuring 16x30x24 in. (WxLxD) or smaller in accordance with Departmental Material Specification (DMS) 11070 "Ground Boxes" and Item 624 "Ground Boxes."

2. Provide Type A, B, C, D, and E ground boxes as shown in the plans, and as listed on the Material Producers List (MPL) on the Department web site under "Roadway Illumination and Electrical Supplies," Item 624.

3. Ensure ground box cover is correctly labeled in accordance with DMS 11070.

4. Provide larger ground boxes in accordance with Item 624 and as shown in the plans.

B. CONSTRUCTION METHODS

1. Remove all gravel and dirt from conduit. Cap all conduits prior to placing aggregate and setting ground box. Provide Grade 3 or 4 coarse aggregate as shown on Table 2 of Item 302 "Aggregates for Surface Treatments." Ensure aggregate bed is in place and at least 9 inches deep, prior to setting the ground box. Install ground box on top of aggregate.

2. Cast ground box aprons in place. Reinforcing steel may be field bent. Ensure the depth of concrete for the apron extends from finished grade to the top of the aggregate bed under the box. Ground box aprons, including concrete and reinforcing steel, are subsidiary to ground boxes when called for by descriptive code.

3. Keep bolt holes in the box clear of dirt. Bolt covers down when not working in ground boxes.

4. Install all conduits and ells in a neat and workmanlike manner. Uniformly space conduits so grounding bushings and bell end fittings can easily be installed.

5. Temporarily seal all conduits in the ground box until conductors are installed.

6. Permanently seal conduits immediately after the completion of conductor installation and pull tests. Permanently seal the ends of all conduits with duct seal, expandable foam, or other method as approved. Do not use duct tape as a permanent conduit sealant. Do not use silicone caulk as a sealant.

7. When a ground rod is present in a ground box, bond all equipment grounding conductors together and to the ground rod with listed connectors.

8. When a type B or D ground box is stacked to meet volume requirements, it is allowable to cut an appropriately sized hole for conduit entry in the side wall at least 18 inches below grade.

9. If an existing ground box in the contract has a metal cover, bond the cover to the equipment grounding conductor with a 3 ft. long stranded bonding jumper the same size as the grounding conductor. The bonding jumper is subsidiary to various bid items. Verify existing ground boxes with metal covers are shown on the plans, with notes fully describing the work required.

10. If other ground boxes with metal covers are within the project limits but are not part of the contract, the Engineer may direct the Contractor to bond the metal covers, identifying the specific boxes in writing. This work will be paid for separately.

11. Bond metal ground box covers to the grounding conductor with a tank ground type lug.

Texas Department of Transportation

Traffic Operations Division Standard

ELECTRICAL DETAILS GROUND BOXES

ED(4)-14

FILE: ed4-14.dgn	DN: TxDOT	CK: TxDOT	DW: TxDOT	CK: TxDOT
©TxDOT October 2014	CONT	SECT	JOB	HIGHWAY
REVISIONS				
	DIST	COUNTY		SHEET NO.
				471

71D

DATE:
FILE:

DISCLAIMER:
The use of this standard is governed by the "Texas Engineering Practice Act". No warranty of any kind is made by TxDOT for any purpose whatsoever. TxDOT assumes no responsibility for the conversion of this standard to other formats or for incorrect results or damages resulting from its use.

ELECTRICAL SERVICES NOTES

1. Provide new materials. Ensure installation and materials comply with the applicable provisions of the National Electrical Code (NEC) and National Electrical Manufacturers Association (NEMA) standards. Ensure material is Underwriters Laboratories (UL) listed. Provide and install electrical service conduits, conductors, disconnects, contactors, circuit breaker panels, and branch circuit breakers as shown on the Electrical Service Data chart in the plans. Faulty fabrication or poor workmanship in material, equipment, or installation is justification for rejection. Where manufacturers provide warranties and guarantees as a customary trade practice, furnish these to the State.

2. Provide electrical services in accordance with Electrical Details standard sheets, Departmental Material Specification (DMS) 11080 "Electrical Services,"DMS 11081 "Electrical Services-Type A," DMS 11082 "Electrical Services-Type C," DMS 11083 "Electrical Services-Type D," DMS 11084 "Electrical Services-Type T," DMS 11085 "Electrical Services-Pedestal (PS)", and Item 628 "Electrical Services" of the Standard Specifications. Provide electrical service types A, C, and D, as listed on the Material Producers List (MPL) on the Department web site under "Roadway Illumination and Electrical Supplies," Item 628. Provide other service types as detailed on the plans.

3. Provide all work, materials, services, and any incidentals needed to install a complete electrical service as specified in the plans.

4. Coordinate with the Engineer and the utility provider for metering and compliance with utility requirements. Primary line extensions, connection charges, meter charges, and other charges by the utility company to provide power to the location are paid for in accordance with Item 628. Get approval for the costs associated with these charges prior to engaging the utility company to do the work. Consult with the utility provider to determine costs and requirements, and coordinate the work as approved.

5. The enclosure manufacturer will provide Master Lock Type 2 with brass tumblers keyed #2195 for all custom electrical enclosures. Installing Contractor is to provide Master Lock #2195 Type 2 with brass tumblers for "off the shelf" enclosures. Master Lock #2195 keys and locks become property of the State. Unless otherwise approved, do not energize electrical service equipment until locks are installed.

6. Enclosures with external disconnects that de-energize all equipment inside the enclosure do not need a dead front trim. Protect incoming line terminations from incidental contact as required by the NEC.

7. When galvanized is specified for nuts, screws, bolts or miscellaneous hardware, stainless steel may be used.

8. Provide wiring and electrical components rated for 75°C. Provide red, black, and white colored XHHW service entrance conductors of minimum size 6 American Wire Gauge (AWG). Identify size 6 AWG conductors by continuous color jacket. Identify electrical conductors sized 4 AWG and larger by continuous color jacket or by colored tape. Mark at least 6 inches of the conductor's insulation with half laps of colored tape, when identifying conductors. Ensure each service entrance conductor exits through a separately bushed non-metallic opening in the weatherhead. The lengths of the conductors outside the weatherhead are to be 12 inches minimum, 18 inches maximum, or as required by utility.

9. All electrical service conduit and conductors attached to the electrical service including the riser or the elbow below ground are subsidiary to the electrical service. For an underground utility feed, all service conduit and conductors after the elbow, including service conduit and conductors for the utility pole riser when furnished by the Contractor, will be paid for separately.

10. Provide rigid metal conduit (RMC) for all conduits on service, except for the ½ in. PVC conduit containing the electrical service grounding electrode conductor. Size the service entrance conduit as shown in the plans. Ensure conduit for branch circuit entry to enclosure is the same size as that shown on the layout sheets for branch circuit conduit. Extend all rigid metal conduits a minimum of 6 inches underground and then couple to the type and schedule of the conduit shown on the layout for that particular branch circuit. Install a grounding bushing on the RMC where it terminates in the service enclosure.

11. Use of liquidtight flexible metal conduit (LFMC) is allowed between the meter and service enclosure when they are mounted 90 to 180 degrees to each other. Size the LFMC the same size as service entrance conduit. LFMC must not exceed 3 feet in length. Strap LFMC within 1 foot of each end. LFMC less than 12 inches in length need not be strapped. Each end of LFMC must have a grounding bushing or be terminated with a grounding fitting. The LFMC must contain a grounded (neutral) conductor. Ensure any bend in LFMC never exceeds 180 degrees. A pull test is required on all installed conductors, with at least six inches of free conductor movement demonstrated to the satisfaction of the Engineer.

12. Ensure all mounting hardware and installation details of services conform to utility company specifications.

13. For all electrical service enclosures listed under Item 628 on the MPL, the UL 508 enclosure manufacturers will prepare and submit a schematic drawing unique to each service. Before shipment to the job site, place the applicable laminated schematic drawings and the laminated plan sheet showing the electrical service data chart used to build the enclosure in the enclosure's data pocket. The installing contractor will copy and laminate the actual project plan sheets detailing all equipment and branch circuits supplied by that service. The laminated plan sheets are to be placed in the service enclosure's document pocket. Reduce 11 in. x 17 in. plan sheets to 8 ½ in. x 11 in. before laminating. If the installation differs from the plan sheets, the installing contractor is to redline plan sheets before laminating.

14. When providing an "Off The Shelf" Type D or Type T service, provide laminated plan sheets detailing equipment and branch circuits supplied by that service. Reduce 11 in. x 17 in. plan sheets to 8 ½ in. x 11 in before laminating. Deliver these drawings before completion of the work to the Engineer, instead of placing in enclosure that has no door pocket.

15. Do not install conduit in the back wall of a service enclosure where it would penetrate the equipment mounting panel inside the enclosure. Provide grounding bushings on all metal conduits, and terminate bonding jumpers to grounding bus. Grounding bushings are not required when the end of the metal conduit is fitted with a conduit sealing hub or threaded boss, such as a meter base hub.

SERVICE ASSEMBLY ENCLOSURE

1. Provide threaded hub for all conduit entries into the top of enclosure.

2. Type galvanized steel (GS) enclosures may be used for Type C panelboards and for Type D and T services that do not use an enclosure mounted photocell or lighting contactor. Provide GS enclosures in accordance with DMS 11080, 11082, 11083, and 11084.

3. Provide aluminum (AL) and stainless steel (SS) enclosures for Types A, C, and D in accordance with DMS 11080, 11081, 11082, 11083, and 11084. Do not paint stainless steel.

4. Provide pedestal service (PS) enclosures in accordance with ED(9) and DMS 11080 and 11085. Do not provide GS pedestal services. If GS is shown in the PS descriptive code, provide an AL enclosure.

MAIN DISCONNECT & BRANCH CIRCUIT BREAKERS

1. Field drill flange-mounted remote operator handle if needed, to ensure handle is lockable in both the "On" and "Off" positions.

2. When the utility company provides a transformer larger than 50 KVA, verify that the available fault current is less than the circuit breaker's ampere interrupting capacity (AIC) rating and provide documentation from the electric utility provider to the Engineer.

PHOTOELECTRIC CONTROL

1. Provide photocell as listed on the MPL. Move, adjust, or shield the photocell from stray or ambient night time light to ensure proper operation. Mount photocell facing north when practical. Mount top of pole photocells as shown on Top Mounted Photocell Detail.

* ELECTRICAL SERVICE DATA

Elec. Service ID	Plan Sheet Number	Electrical Service Description	Service Conduit **Size	Service Conductors No./Size	Safety Switch Amps	Main Ckt. Bkr. Pole/Amps	Two-Pole Contractor Amps	Panelbd/ Loadcenter Amp Rating	Branch Circuit ID	Branch Ckt. Bkr. Pole/Amps	Branch Circuit Amps	KVA Load
SB 183	289	ELC SRV TY A 240/480 100(SS)AL(E)SF(U)	2"	3/#2	100	2P/100	100	N/A	Lighting NB	2P/40	26	28.1
									Lighting SB	2P/40	25	
									Underpass	1P/20	15	
NB Access	30	ELC SRV TY D 120/240 060(NS)SS(E)TS(O)	1 ¼"	3/#6	N/A	2P/60		100	Sig. Controller	1P/30	23	5.3
							30		Luminaires	2P/20	9	
									CCTV	1P/20	3	
2nd & Main	58	ELC SRV TY T 120/240 000(NS)GS(N)SP(O)	1 ¼"	3/#6	N/A	N/A	N/A	70	Flashing Beacon 1	1P/20	4	1.0
									Flashing Beacon 2	1P/20	4	

* Example only, not for construction. All new electrical services must have electrical service data chart specific to that service as shown in the plans.

** Verify service conduit size with utility. Size may change due to utility meter requirements. Ensure conduit size meets the National ELectrical Code.

EXPLANATION OF ELECTRICAL SERVICE DESCRIPTIVE CODE

ELEC SERV TY X XXX/XXX XXX (XX) XX (X) XX (X)

Schematic Type

Service Voltage V / V

Disconnect Amp Rating
000 indicates main lug only/
Typically Type T

(SS)= Safety Switch Ahead of Meter-Check with Utility
(NS)= No safety Switch Ahead of Meter-Check with Utility

Enclosure Type
GS= Galvanized steel("off the shelf")
SS= Stainless steel(Custom Enclosure)See MPL
AL= Aluminum (Custom Enclosure)See MPL

Photocell Mounting Location
(E)= Inside Service/Enclosure Mounted
(T)= Top of pole
(L)= Luminaire mounted
(N)= None/No Photocell or Lighting Contactor Required

Service Support Type
GC= Granite concrete
OC= Other concrete
TP= Timber pole
SP= Steel pole
SF= Steel frame
OT= Pole by others or paid for separately
EX= Existing pole
TS= Service on traffic signal pole
PS= Pedestal Service

O= Overhead Service Feed from Utility
U= Underground Service Feed from Utility

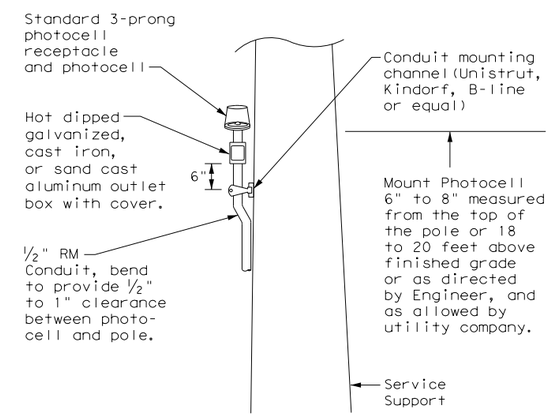

TOP MOUNTED PHOTOCELL

Install conduit strap maximum 3 feet from box. 5 foot maximum spacing between straps supporting conduit.

Texas Department of Transportation

Traffic Operations Division Standard

ELECTRICAL DETAILS SERVICE NOTES & DATA

ED(5)-14

FILE: ed5-14.dgn	DN: TxDOT	CK: TxDOT	DW: TxDOT	CK: TxDOT
© TxDOT October 2014	CONT	SECT	JOB	HIGHWAY
REVISIONS				
	DIST	COUNTY		SHEET NO.
				472

DATE:
FILE:

71E

DISCLAIMER:
The use of this standard is governed by the "Texas Engineering Practice Act". No warranty of any kind is made by TxDOT for any purpose whatsoever. TxDOT assumes no responsibility for the conversion of this standard to other formats or for incorrect results or damages resulting from its use.

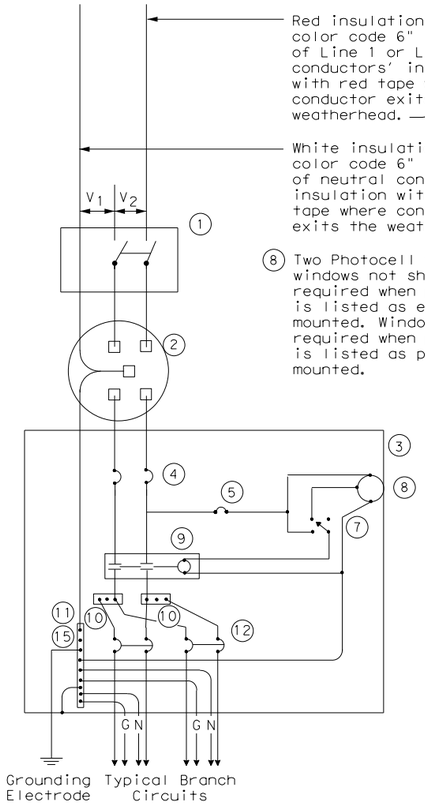

SCHEMATIC TYPE A
THREE WIRE

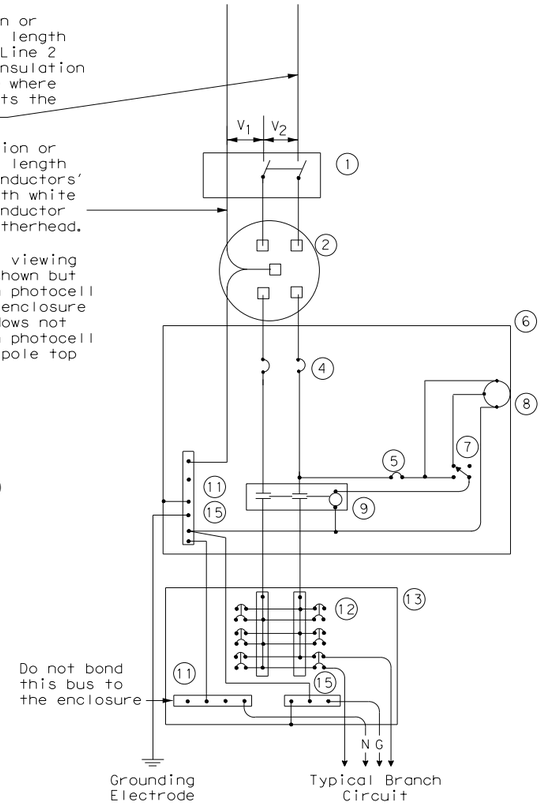

SCHEMATIC TYPE C
THREE WIRE

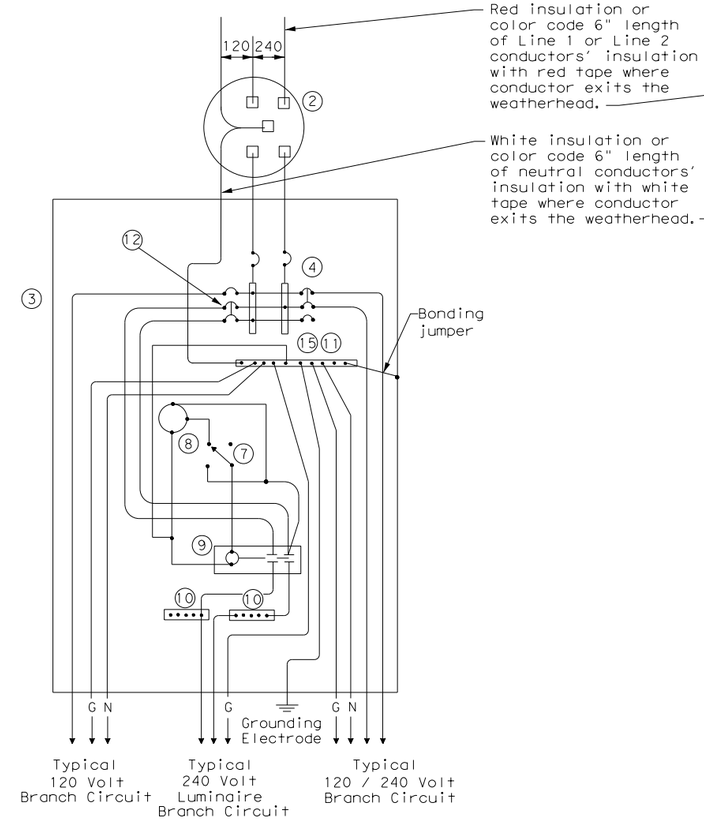

SCHEMATIC TYPE D - CUSTOM
120/240 VOLTS - THREE WIRE

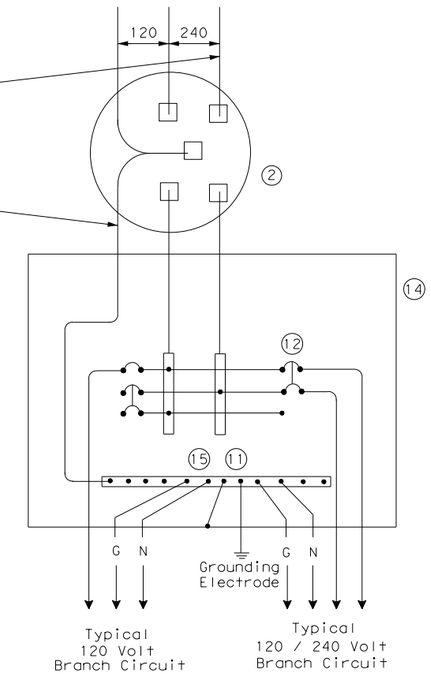

SCHEMATIC TYPE T
120/240 VOLTS - THREE WIRE

Galvanized steel-"Buy Off The Shelf" only. When required install photocell top of the pole or on luminaire only, no lighting contractor will be installed.

WIRING LEGEND	
———	Power Wiring
———	Control Wiring
—N—	Neutral Conductor
—G—	Equipment grounding conductor-always required

SCHEMATIC LEGEND	
1	Safety Switch (when required)
2	Meter (when required-verify with electric utility provider)
3	Service Assembly Enclosure
4	Main Disconnect Breaker (See Electrical Service Data)
5	Circuit Breaker, 15 Amp (Control Circuit)
6	Auxiliary Enclosure
7	Control Station ("H-O-A" Switch)
8	Photo Electric Control (enclosure-mounted shown)
9	Lighting Contactor
10	Power Distribution Terminal Blocks
11	Neutral Bus
12	Branch Circuit Breaker (See Electrical Service Data)
13	Separate Circuit Breaker Panelboard
14	Load Center
15	Ground Bus

Texas Department of Transportation

Traffic Operations Division Standard

ELECTRICAL DETAILS SERVICE ENCLOSURE AND NOTES

ED(6)-14

FILE: ed6-14.dgn	DN: TxDOT	CK: TxDOT	DW: TxDOT	CK: TxDOT
©TxDOT October 2014	CONT	SECT	JOB	HIGHWAY
REVISIONS				
	DIST	COUNTY		SHEET NO.
				473

71F

DATE:
FILE:

SUPPORT TYPE STEEL POLE (SP) AND STEEL FRAME (SF)

1. Provide steel pole and steel frame supports as per TxDOT Departmental Material Specification (DMS)11080 "Electrical Services." Mount all equipment and conduit on 12 gauge galvanized steel or stainless steel channel strut, 1 ½ in. or 1 ⅝ in. wide by 1 in. up to 3 ¾ in. deep Unistrut, Kindorf, B-line or equal. Bolt or weld all channel and hardware to vertical members as approved. Do not stack channel. File smooth and paint field cut ends of all channel with zinc-rich paint before installing.

2. Provide poles for overhead service with an eyebolt or similar fitting for attachment of the service drop to the pole in conformance with the electric utility provider's specifications.

3. Provide and install galvanized ¾ in. x 18 in. x 4 in. (dia. x length x hook length) anchor bolts for underground service supports. Provide and install galvanized ¾ in. x 56 in. x 4 in. anchor bolts for overhead service supports. Ensure anchor bolts have 3 in of thread, with 3 ¼ in. to 3 ½ in. of the exposed anchor bolt projecting above finished foundation. Provide and install leveling nuts for all anchor bolts.

4. Bond one of the anchor bolts to the rebar cage with 6 AWG bare stranded copper conductor. Use listed mechanical connectors rated for embedment in concrete. See Inset B.

5. Furnish and install rigid metallic ells in all steel pole and steel frame foundations for all conduits entering the service from underground.

6. Use class C concrete for foundations. Ensure reinforcing steel is Grade 60 with 3" of unobstructed concrete cover.

7. Drill and tap steel poles and frames for ½ in. X 13 UNC tank ground fitting. For steel pole service supports, provide and install tank ground fitting 4 in. to 6 in. below electrical service enclosure. Provide properly sized hole through the bottom of the enclosure for the service grounding electrode conductor. Ensure electrical service grounding electrode conductor is as short and straight as possible from the enclosure to the tank ground fitting. For steel frame service supports, provide and install tank ground fitting on steel frame post. Install service grounding electrode conductor in a non-metallic conduit or tubing from the enclosure to the steel frame post. Connect electrical service grounding electrode conductor to the tank ground fitting. See steel frame and steel pole details and Inset A for more information. Size service entrance conduit and branch circuit conduit as shown in the plans. For underground conduit runs from the electrical service, extend RMC from the service enclosure to an RMC elbow, and then connect the schedule type and size of conduit shown in the plans. Provide and install grounding bushings where RMC terminates in the enclosure. Grounding bushings are not required when RMC is fitted into a sealing hub or threaded boss.

8. If Steel pole or frame is painted, bond each separate painted piece with a bonding jumper attached to a tapped hole.

9. Provide ¼" - 20 machine screws for bonding. Do not use sheet metal screws. Remove all non-conductive material at contact points. Terminate bonding jumpers with listed devices. Install minimum size 6 AWG stranded copper bonding jumpers. Make up all threaded bonding connections wrench tight.

10. Avoid contact of the service drop and service entrance conductors with the metal pole to prevent abrasion of the insulated conductors.

11. Shop drawings are not required for service support structure unless specifically stated elsewhere or directed by the Engineer.

DISCLAIMER:
The use of this standard is governed by the "Texas Engineering Practice Act". No warranty of any kind is made by TxDOT for any purpose whatsoever. TxDOT assumes no responsibility for the conversion of this standard to other formats or for incorrect results or damages resulting from its use.

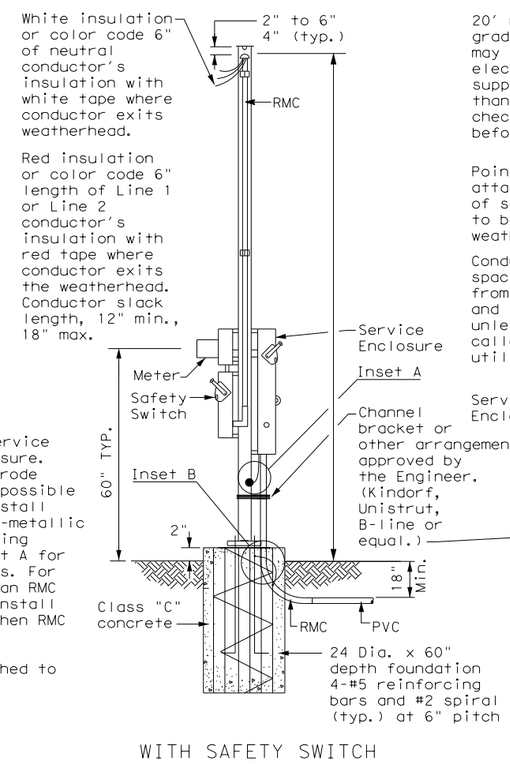

WITH SAFETY SWITCH

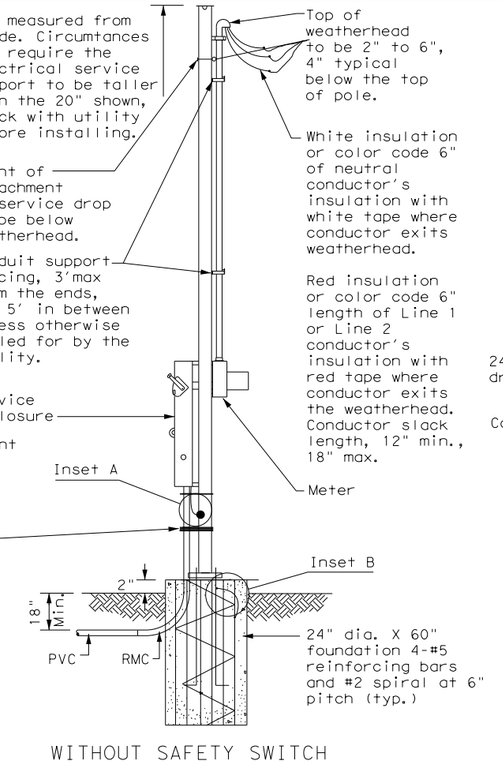

WITHOUT SAFETY SWITCH

SERVICE SUPPORT TYPE SP (O) - OVERHEAD SERVICE

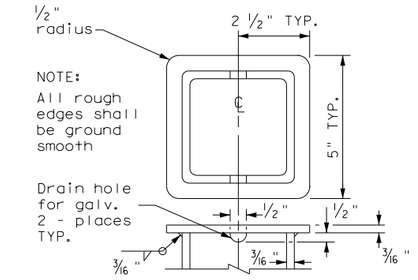

POLE TOP PLATE

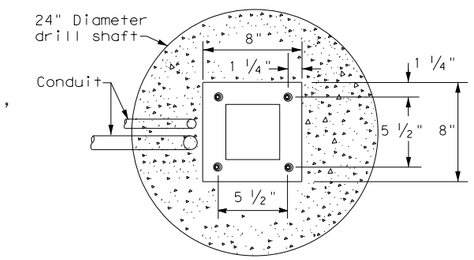

BASE PLATE DETAIL

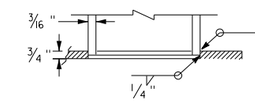

BOTTOM OF POLE

SERVICE SUPPORT TYPE SF & SP

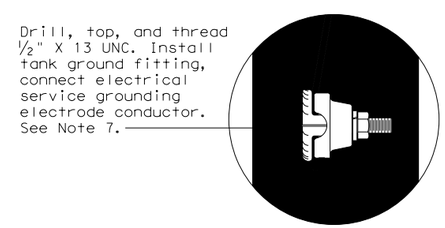

FRONT VIEW

INSET A

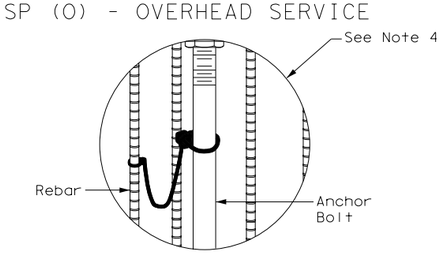

INSET B

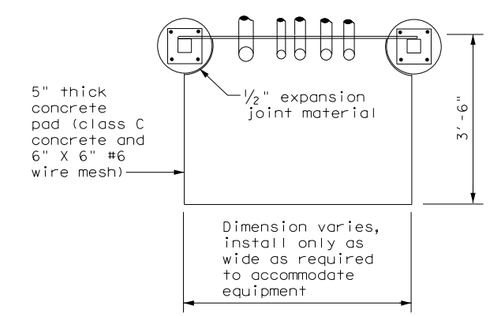

TOP VIEW

SERVICE SUPPORT TY SF (O) & SF (U)

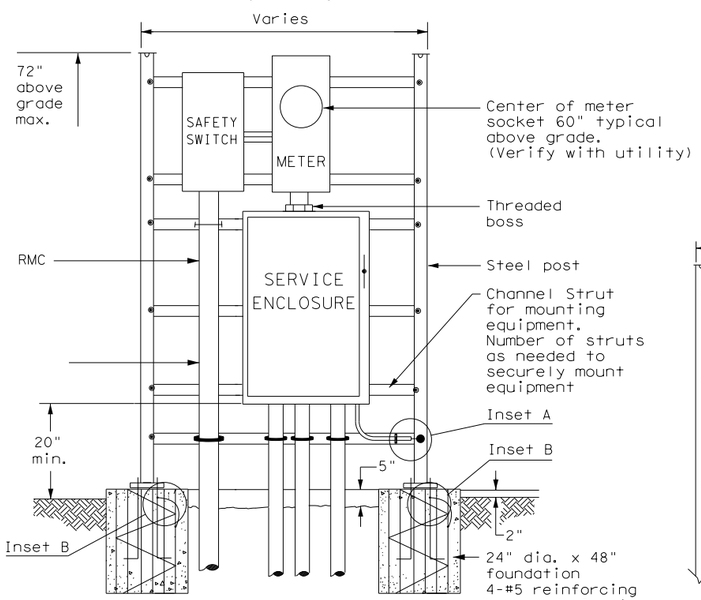

WITH SAFETY SWITCH
FRONT VIEW

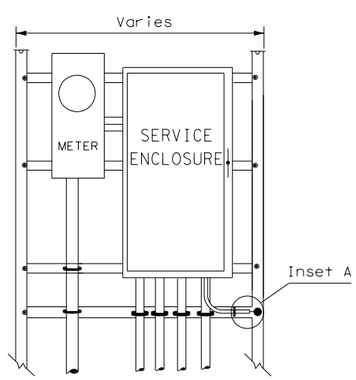

WITHOUT SAFETY SWITCH

SERVICE SUPPORT TYPE SF(U) - UNDERGROUND SERVICE

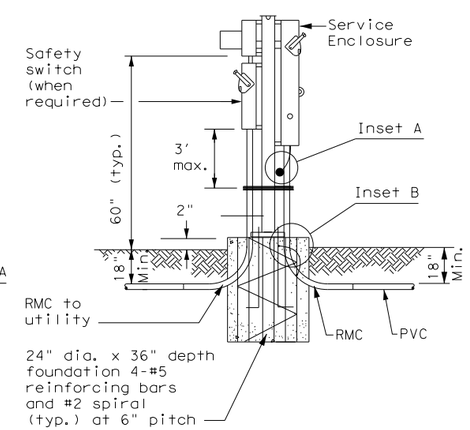

WITH SAFETY SWITCH

SERVICE SUPPORT TYPE SP(U) - UNDERGROUND SERVICE

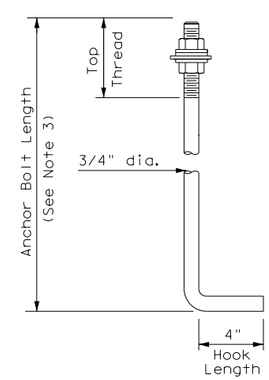

HOOKED ANCHOR DETAIL

Texas Department of Transportation

Traffic Operations Division Standard

ELECTRICAL DETAILS SERVICE SUPPORT TYPES SF & SP

ED(7)-14

FILE: ed7-14.dgn	DN: TxDOT	CK: TxDOT	DW: TxDOT	CK: TxDOT
© TxDOT October 2014	CONT	SECT	JOB	HIGHWAY
REVISIONS				
	DIST		COUNTY	SHEET NO.
				474

71G

DATE:
FILE:

TRAFFIC SIGNAL NOTES

1. Do not pass luminaire conductors through the signal controller cabinet.
2. Include an equipment grounding conductor in all conduits throughout the electrical system. Bond all exposed metal parts to the grounding conductor.
3. Provide roadway luminaires, when required, in accordance with the material and construction sections of Item 610, "Roadway Illumination Assemblies," except for performance testing of luminaires. Test installed roadway luminaires for proper operation as a part of the associated traffic signal system test.
4. If internally illuminated street name signs are approved for use, ground the fixture to the pole with a 12 AWG green XHHW conductor.
5. Bond anchor bolts to rebar cage in two locations using #3 bars or 6 AWG stranded copper conductors. Use listed mechanical connectors rated for embedment in concrete. See TXDOT standard TS-FD for further details.
6. Drill and tap signal poles for ½ in. X 13 UNC tank ground fitting. Provide and install tank ground fitting 4 in. to 6 in. directly below electrical service enclosure. Provide properly sized hole through the bottom of the enclosure for the service grounding electrode conductor. Connect the electrical service grounding electrode conductor to the tank ground fitting. Ensure electrical service grounding electrode conductor is as short and straight as possible from the enclosure to the tank ground fitting. See Inset A detail for further information. Size service entrance conduit and branch circuit conduit as shown in the plans.
7. Mount electrical service enclosure and meter to signal pole with stainless steel bands. Ensure bands are a minimum width of ¾ in. Secure enclosures to bands using two-bolt brackets. Install brackets near top and bottom of each enclosure. Install properly sized stainless steel washers on each bolt in the enclosure. Band or drill and tap properly sized stand-off straps to signal pole for attaching conduit.
8. Conduct pull tests and insulation resistance tests on all illumination and power conductors as required in Item 620 "Electrical Conductors" and ED(3). To prevent electronics damage, do not conduct insulation resistance tests on traffic signal cables after termination.
9. Lock all enclosures and bolt down all ground box covers before applying power to the signal installation.
10. Terminate conduits entering the top of enclosures with a conduit-sealing hub or threaded boss such as meter hub. Install a grounding bushing on all metal conduits not connected to conduit-sealing hub or threaded boss. Bond the grounding bushing to the ground bus with a bonding jumper. Seal all conduits entering enclosures with duct seal or expanding foam. Do not use silicone to seal conduit ends.
11. For all conduits, ensure the burial depth is a minimum of 18". Ensure the minimum burial depth for conduit placed under a roadway is 24".

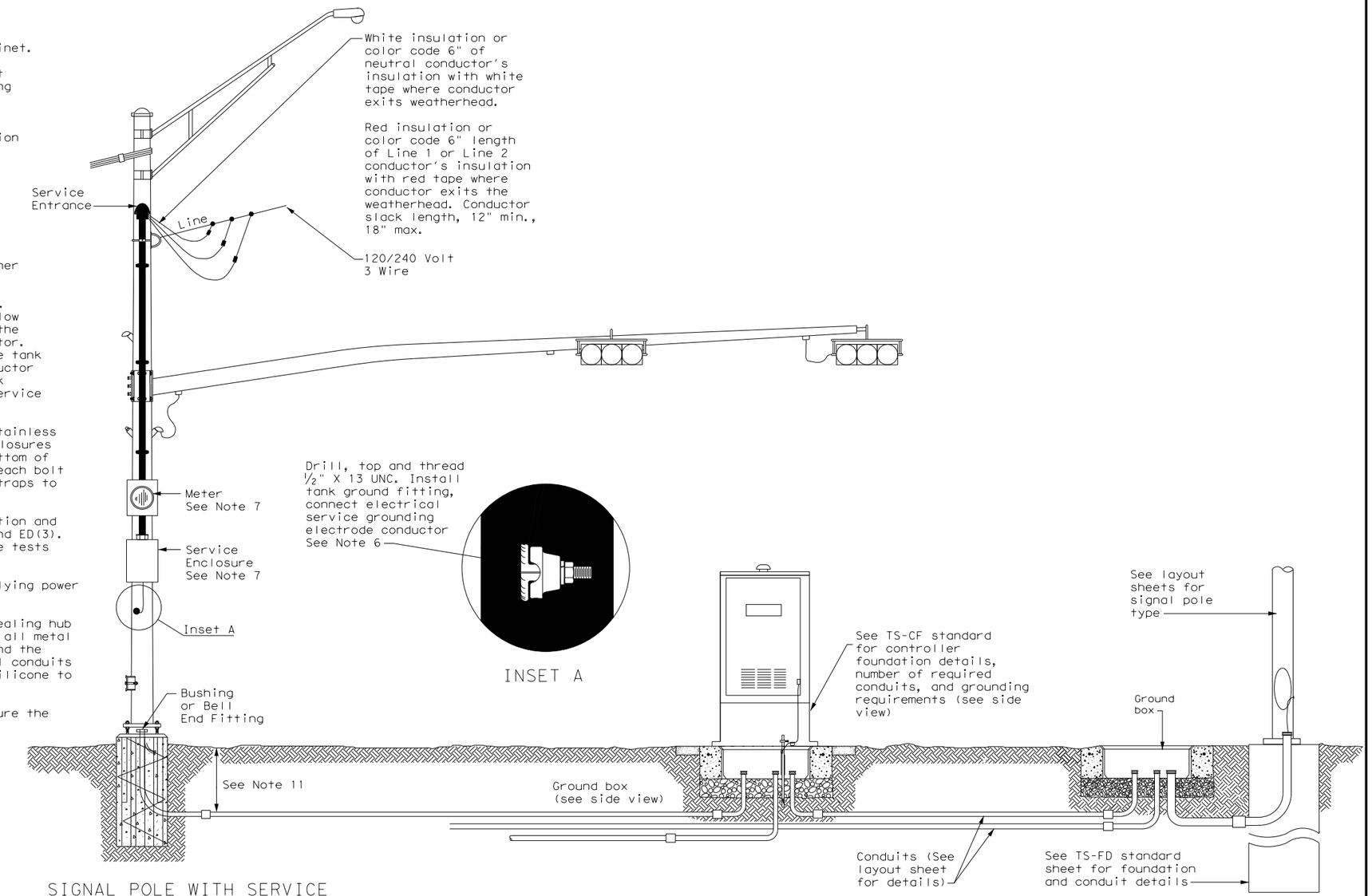

SIGNAL POLE WITH SERVICE

Type T electrical service mounted on signal pole shown as an example. See electrical details, layout sheets, and electrical service data chart for additional details.

SIGNAL CONTROLLER FRONT VIEW

SIGNAL POLE

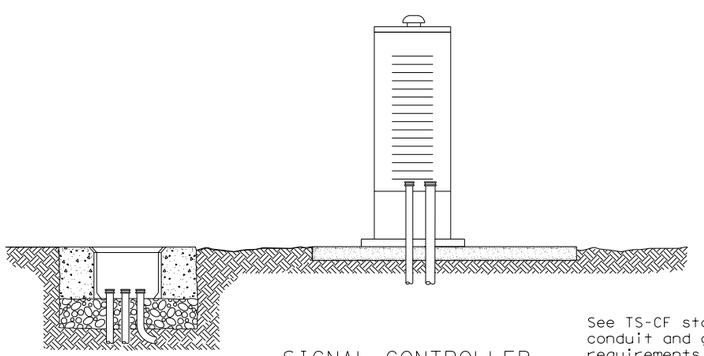

SIGNAL CONTROLLER SIDE VIEW

See TS-CF standard for conduit and grounding requirements. See layout sheets for ground box locations and any additional conduits that are required.

DISCLAIMER:
The use of this standard is governed by the "Texas Engineering Practice Act". No warranty of any kind is made by TxDOT for any purpose whatsoever. TxDOT assumes no responsibility for the conversion of this standard to other formats or for incorrect results or damages resulting from its use.

DATE:
FILE:

Texas Department of Transportation — Traffic Operations Division Standard

ELECTRICAL DETAILS TYPICAL TRAFFIC SIGNAL SYSTEM DETAILS

ED(8)-14

FILE: ed8-14.dgn	DN: TxDOT	CK: TxDOT	DW: TxDOT	CK: TxDOT
© TxDOT October 2014	CONT	SECT	JOB	HIGHWAY
REVISIONS				
	DIST	COUNTY		SHEET NO.
				475

71H

INTERNALLY LIGHTED STREET NAME SIGN DETAILS

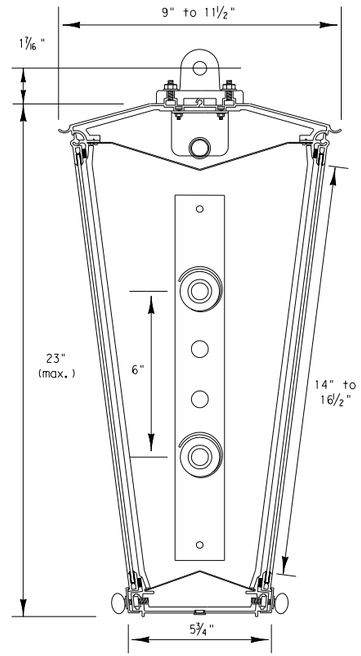

Section A-A

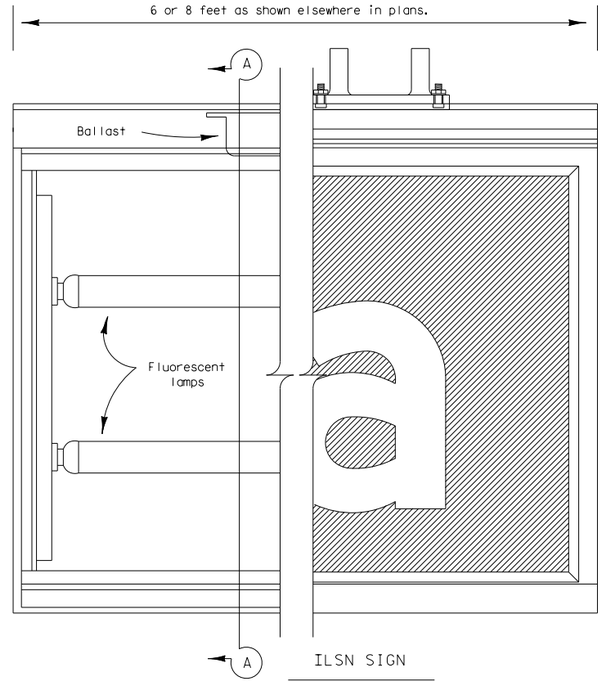

ILSN SIGN

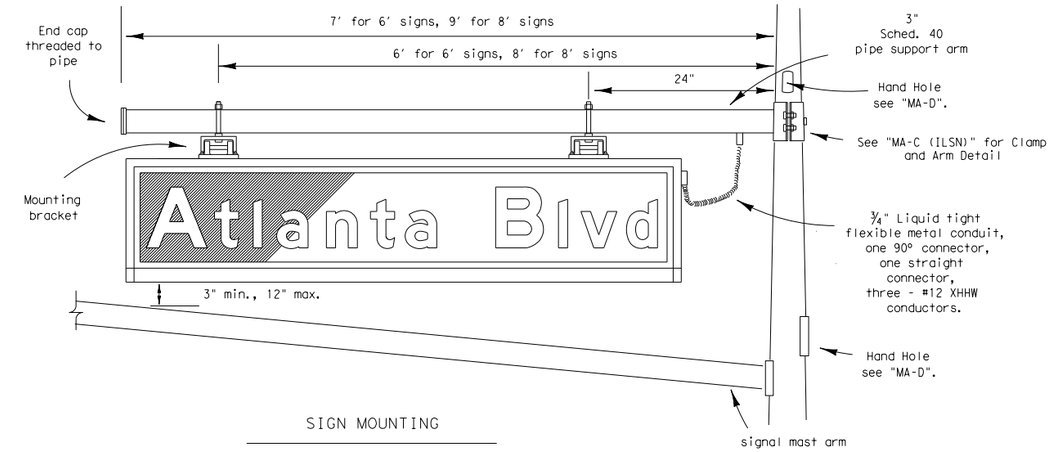

SIGN MOUNTING

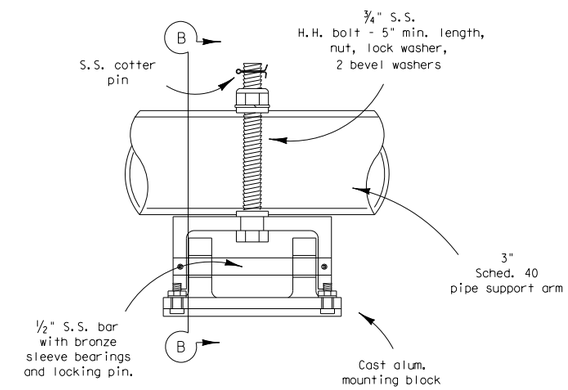

MOUNTING BRACKET

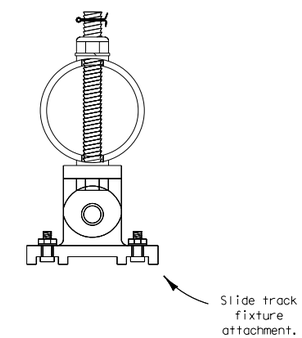

Section B-B

ILSN SIGN NOTES:

1. Eight foot ILSN sign shall not exceed 11.5 sq. ft. effective projected area (EPA) and shall not exceed a weight of 85 lbs.
   Six foot ILSN sign shall not exceed 8.7 sq. ft. EPA and shall not exceed a weight of 70 lbs.
2. Sign message shall be as shown elsewhere in the plans.
3. See Special Specification, "internally Lighted Street Name Signs" for additional details.

EXPLANATION OF DESCRIPTION

ILSN Sign 6 S

- ILSN Sign — Internally lighted street name sign
- 6 — Sign length; 6 or 8 ft.
- S — Single or double face

DISCLAIMER: The use of this standard is governed by the "Texas Engineering Practice Act". No warranty of any kind is made by TxDOT for any purpose whatsoever. TxDOT assumes no responsibility for the conversion of this standard to other formats or for incorrect results or damages resulting from its use.

DATE:
FILE:

Texas Department of Transportation
Traffic Operations Division

STREET NAME SIGN DETAILS (ILLUMINATED)

SNS-95

© TxDOT August 1995

DN: TXDOT	CK: TXDOT	DW: TXDOT	CK: TXDOT
REVISIONS	CONT	SECT	JOB	HIGHWAY
	DIST	COUNTY	SHEET NO.
			476

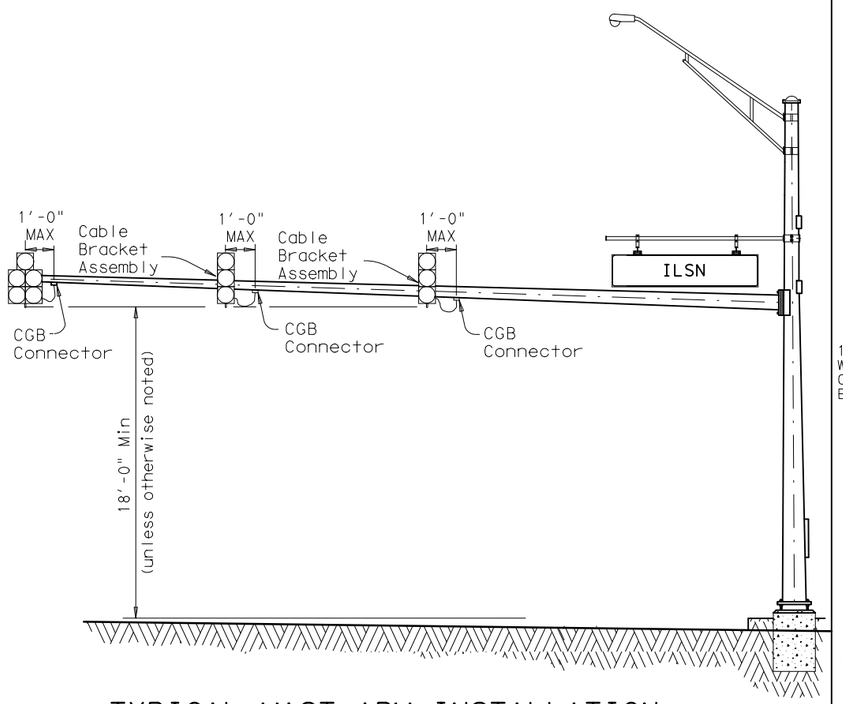

TYPICAL MAST ARM INSTALLATION

BACKPLATES ARE NOT SHOWN FOR CLARITY

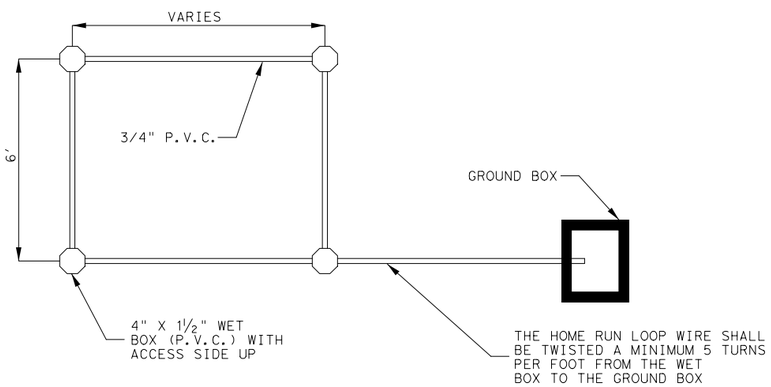

NOTES:

SHALL INSTALL CONDUIT ENCASED LOOPS AT THE LOCATIONS SHOWN ON THE PLANS USING 3/4 " DIAMETER PVC SCHEDULE 40 OR AT NO ADDITIONAL COST 1" DIAMETER PVC SCHEDULE 80.

LOOP LOCATIONS MAY BE STAGGERED SLIGHTLY (6") TO ACCOMMODATE HOME RUN PLACEMENT.

INDIVIDUAL HOME RUN CONDUITS SHALL BE EXTENDED TO THE GROUND BOX SHOWN ON THE PLANS FOR EACH LOOP INSTALLED.

THE NUMBER OF LOOP WIRE TURNS SHALL BE AS SHOWN ON THE TYPICAL LOOP DETECTOR DETAILS.

CONDUIT ENCASED LOOPS

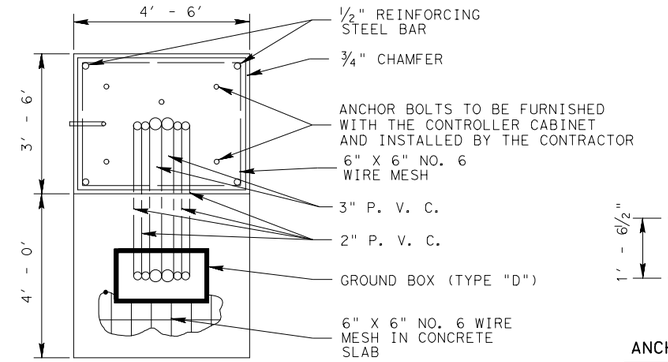

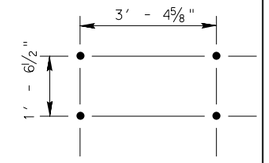

ANCHOR BOLT PATTERN

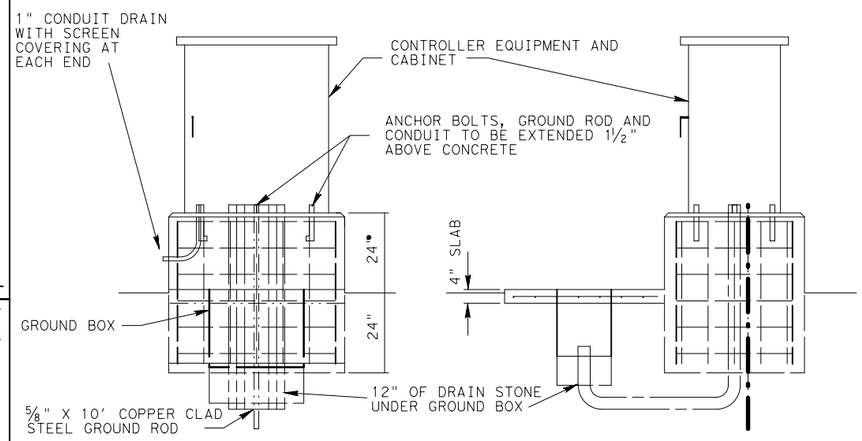

CONTROLLER MOUNT NOTES :

ALL WIRING TERMINATING IN THE CONTROLLER SHALL BE LABELED IN A MANNER THAT CAN BE IDENTIFIED WHEN THE CONTROLLER IS INSTALLED THE CONTRACTOR SHALL CONNECT THE FIELD WIRING TO THE CONTROLLER

ONE 2" PVC SHALL REMAIN EMPTY FOR FUTURE USE

CONCRETE SHALL BE TESTED AS MISCELLANEOUS CONCRETE

ALL MATERIALS SHOWN AND LABOR TO INSTALL THE CONTROLLER FOUNDATION SHALL BE CONSIDERED SUBSIDIARY TO PERTINENT ITEMS

CONTROLLER FOUNDATION SHALL BE AS SHOWN ON THE PLANS, UNLESS OTHERWISE DIRECTED BY THE ENGINEER.

TYPICAL CONTROLLER MOUNT DETAILS

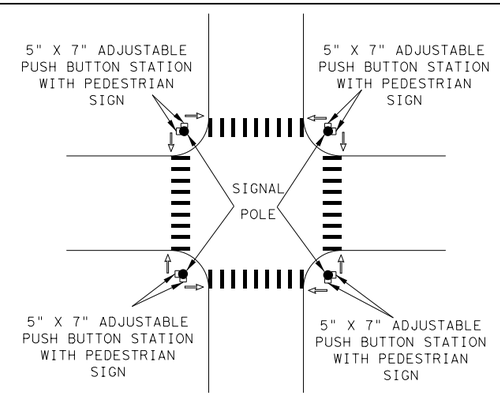

TYPICAL PED PUSH BUTTON LOCATION

THE ENGINEER SHALL VERIFY ALL PEDESTRIAN SIGNAL AND PEDESTRIAN PUSH BUTTON LOCATIONS PRIOR TO INSTALLATION.

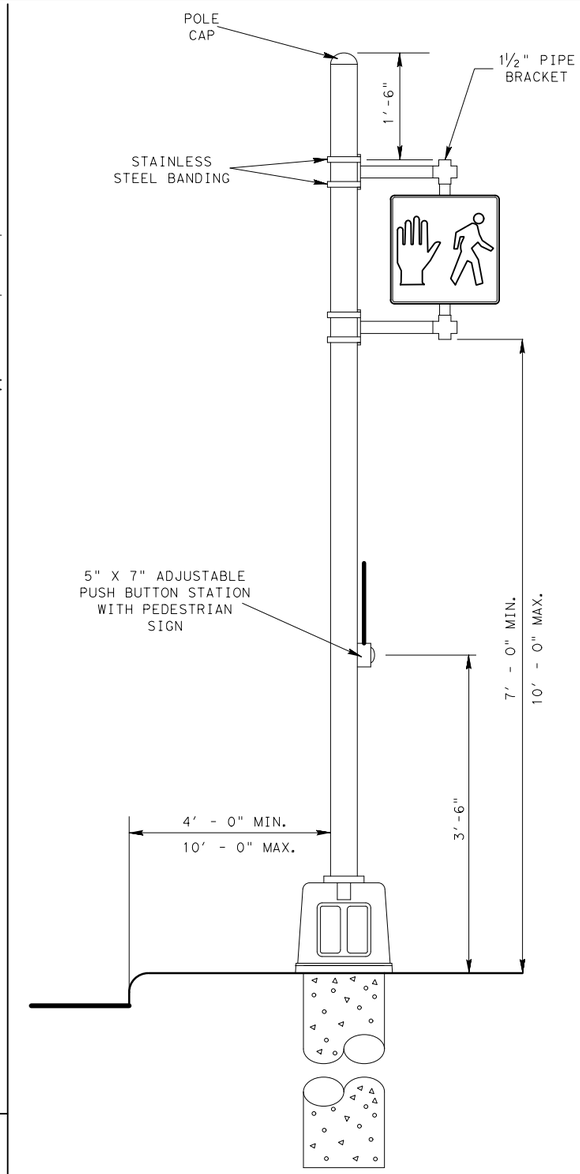

TYPICAL PEDESTAL POLE ASSEMBLY

San Antonio District Standard

MISCELLANEOUS TRAFFIC SIGNAL DETAILS

MTS

© 2006 Texas Department of Transportation

REVISIONS	FED. RD. DIV. NO.	FEDERAL AID PROJECT NO.		SHEET NO.
FEB. 2006				477
OCT. 2007	STATE	DIST.	COUNTY	
	CONT.	SECT.	JOB	HIGHWAY NO.

4:26:42 PM
2/27/2017
c:\pwworking\amy.coxe\d0472378\016-signaldet.dgn

LEVELS DISPLAYED
1 2 3 4 5 6 7 8 9 10 11 12 13 14 15 16
17 18 19 20 21 22 23 24 25 26 27 28 29 30 31 32
33 34 35 36 37 38 39 40 41 42 43 44 45 46 47 48
49 50 51 52 53 54 55 56 57 58 59 60 61 62 63
ACC:

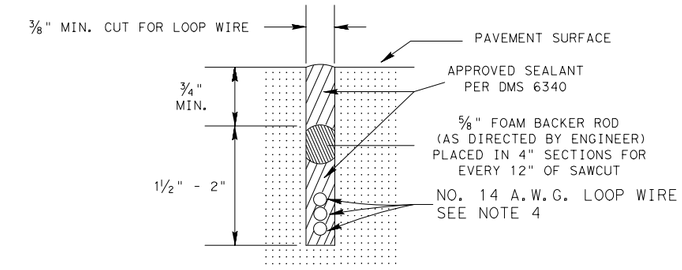

LOOP SAW CUT CROSS-SECTION

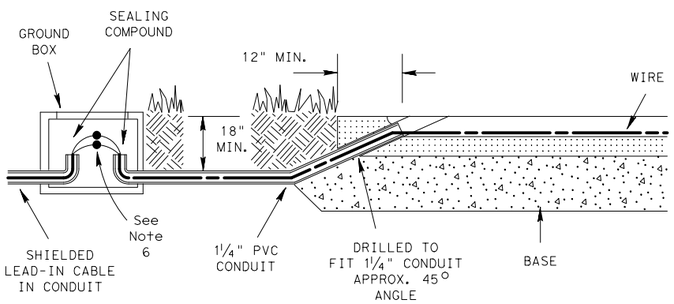

TYPICAL LEAD IN CONFIGURATION (WITHOUT CURBING)

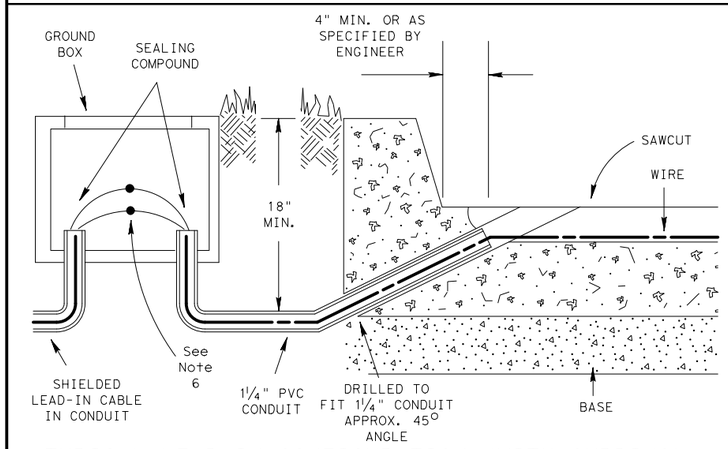

TYPICAL LEAD IN CONFIGURATION (WITH CURBING)

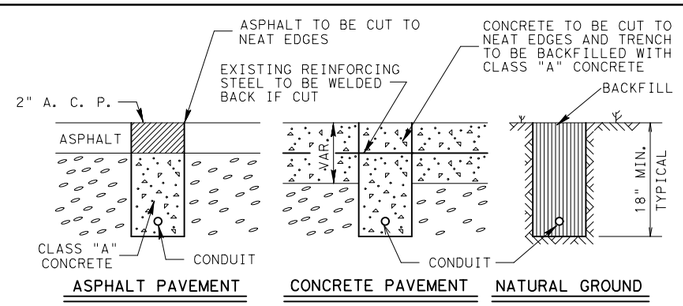

TRENCH DETAILS

CONCRETE TO BE TESTED AS MISCELLANEOUS CONCRETE
WIDTH OF TRENCH SHALL BE WIDE ENOUGH TO ACCOMMODATE CONDUIT

TYPICAL LOOP DETECTOR LAYOUTS

(AS SPECIFIED IN PLANS)

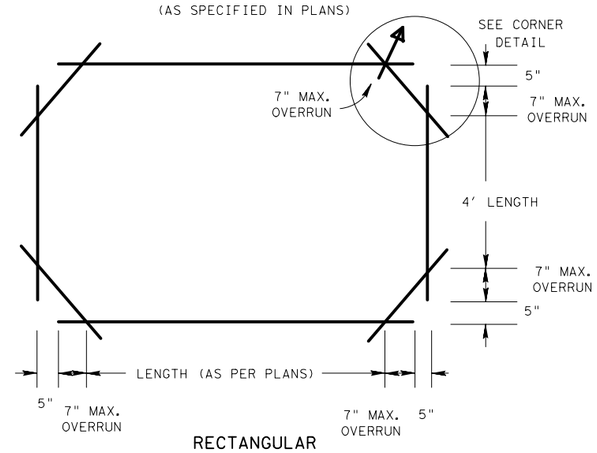

RECTANGULAR

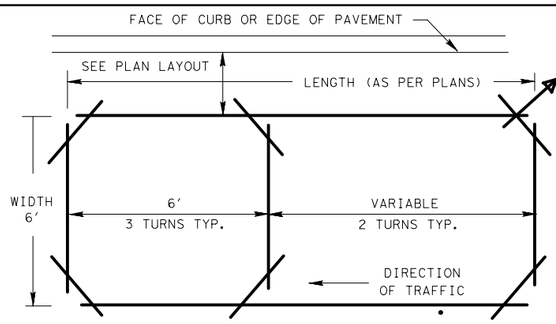

POWER HEADER

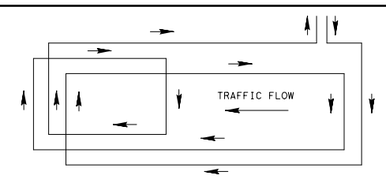

LOOP WINDING DETAILS

TYPICAL CORNER DETAILS

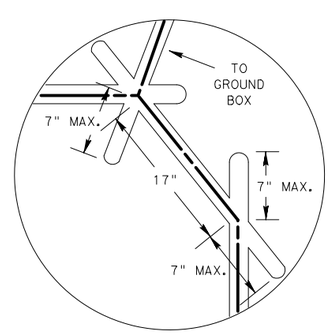

SAWCUT CORNER DETAIL

7" OVERRUN BASED ON 24" DIAMETER SAW BLADE

LOOP DETECTOR NOTES :

1. THE PAVEMENT CUT IS TO BE MADE WITH ANY EQUIPMENT THAT WILL PRODUCE A NEAT STRAIGHT LINE OF THE SIZE INDICATED. ALL LOOSE MATERIAL SHALL BE REMOVED. THE CUT SHALL BE CLEAN AND DRY WHEN THE WIRE AND THE SEALANT IS PLACED
2. WHERE MORE THAN ONE LOOP IS PLACED ON AN INTERSECTION APPROACH, THE WIRE FROM LOOP TO GROUND BOX SHALL NOT BE PLACED IN A SAW CUT WITH WIRE FROM OTHER LOOPS UNLESS OTHERWISE SHOWN IN THE PLANS
3. THE LOOP WIRE SHALL BE TWISTED A MINIMUM OF FIVE TURNS PER FOOT FROM THE EDGE OF THE ROAD TO THE GROUND BOX AND NO SPLICES SHALL BE PERMITTED IN THE LOOP OR IN THE RUN TO THE PULL BOX
4. THE 1/C#14 LOOP WIRE SHALL BE SINGLE CONDUCTOR CROSSLINKED POLYETHYLENE (0.045) INSULATED WIRE, TYPE: USE, RHH, RHW,14 AWG STRANDED COPPER RATED AT 600 VOLTS
5. THE 2/C#14 LOOP CABLE SHALL BE TWO CONDUCTOR SHIELDED CABLE, 14 AWG, 19 X 27 STRANDED , 600 VOLT TINNED COPPER, POLYETHYLENE INSULATED, TWISTED PAIR, TWISTED A MINIMUM OF FIVE TWISTS PER FOOT, ALUMINUM-POLYESTER SHIELD, 16 AWG STRANDED TINNED COPPER DRAIN WIRE, CHROME VINYL JACKET, 100 % SHIELD COVERAGE THE LOOP CABLE SHALL BE CONTINUOUS WITHOUT SPLICES
6. THE LOOP WIRE SHALL BE SPLICED TO THE LOOP CABLE BY SOLDERING CONDUCTORS, SECURING WITH A WIRE NUT AND FULLY ENCAPSULATING INTO A WATER TIGHT COMMERCIAL SPLICING KIT
7. ALL LOOP WIRE PLACED IN A SAW CUT SHALL BE SEALED BY FULLY ENCAPSULATING IT WITH LOOP WIRE SEALANT
8. ALL LOOP WIRE AND LOOP CABLE SHALL BE TESTED. WIRE AND CABLE TESTING LESS THAN 50 MEGAOHMS INSULATION RESISTANCE AT 500 VOLTS SHALL BE REPLACED BY THE CONTRACTOR AT HIS EXPENSE. THIS TEST SHOULD BE MADE BEFORE, DURING AND AFTER EACH COMPLETE LOOP DETECTOR INSTALLATION
9. UPON COMPLETION OF THE COMPLETE LOOP DETECTOR SYSTEM, THE FINAL TEST WILL BE MADE AT ITS TERMINATION AT THE CONTROLLER BY THE ENGINEER. ANY LOOP DETECTOR NOT MEETING THE REQUIREMENTS OF NOTE 8 SHALL BE REPLACED. THE FINAL TEST SHALL BE MADE PRIOR TO THE FINAL MAT OF A.C.P.
10. THE LOOP LOCATION, CONFIGURATION AND THE NUMBER OF TURNS SHALL BE AS SHOWN ON THE PLANS OR AS DIRECTED BY THE ENGINEER.

RECOMMENDED NUMBER OF TURNS FOR LOOP DETECTORS

LOOP PERIMETER SIZE (FT.)	NUMBER OF TURNS	APPROXIMATE LOOP SIZES INCLUDED
24' or Less	3 or 4	5' x 5', 6' x 6'
25' - 110'	2 or 3	6' x 10', 6' x 45'
110' or More	1 or 2	6' x 50' or Longer

TYPICAL VIVDS DETAILS

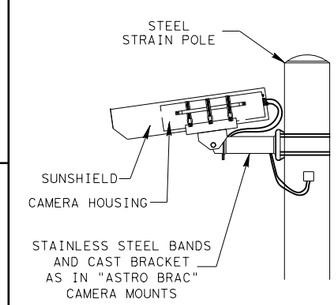

POLE MOUNT

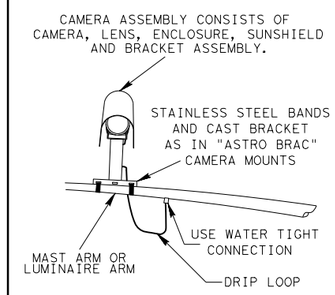

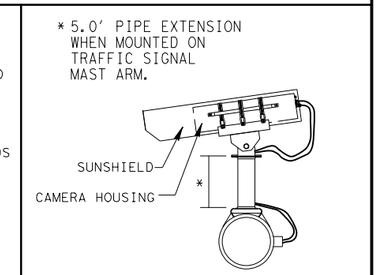

MAST ARM OR LUMINAIRE ARM

VIDEO DETECTION NOTES

1. VIDEO DETECTION PROCESSOR UNIT SHALL BE INSTALLED INSIDE CONTROLLER CABINET.
2. VIDEO DETECTION CAMERA & BRACKET SHALL BE INSTALLED AS DETAILED OR AS DIRECTED BY THE ENGINEER.
3. CAMERAS SHALL BE MOUNTED AS FAR OVER THE ROADWAY AS POSSIBLE.
4. STAINLESS STEEL BANDS AND CAST BRACKETS AS IN "ASTRO-BRAC" SHALL BE USED TO INSTALL THE CAMERAS.
5. WHEN AIMING CAMERA, HORIZON SHALL NOT BE VISIBLE IN THE FIELD OF VIEW.
6. CAMERA ENCLOSURE ASSEMBLY SHALL BE ROTATABLE AFTER INSTALLATION TO PROVIDE PROPER ALIGNMENT.
7. ALL CABLE ENTRY AND EXIT POINTS IN THE MAST ARM AND/OR POLES SHALL BE WATER TIGHT.
8. APPLY SILICON DIELECTRIC COMPOUND INTO CONNECTORS AS APPROVED.

San Antonio District Standard

VEHICLE DETECTOR INSTALLATION DETAILS

VD(1)-06

© 2006 Texas Department of Transportation

REVISIONS	FED. RD. DIV. NO.	FEDERAL AID PROJECT NO.		SHEET NO.
FEB. 2006				478
OCT. 2006	STATE	DIST.	COUNTY	
	CONT.	SECT.	JOB	HIGHWAY NO.

4:27:01 PM
2/2/2011
c:\pwworking\amy.coxe\d0472378\016-signaldet.dgn

LEVELS DISPLAYED
1 2 3 4 5 6 7 8 9 10 11 12 13 14 15 16
17 18 19 20 21 22 23 24 25 26 27 28 29 30 31 32
33 34 35 36 37 38 39 40 41 42 43 44 45 46 47 48
49 50 51 52 53 54 55 56 57 58 59 60 61 62 63
ACC:

LOOP DETECTOR PLACEMENT DETAILS

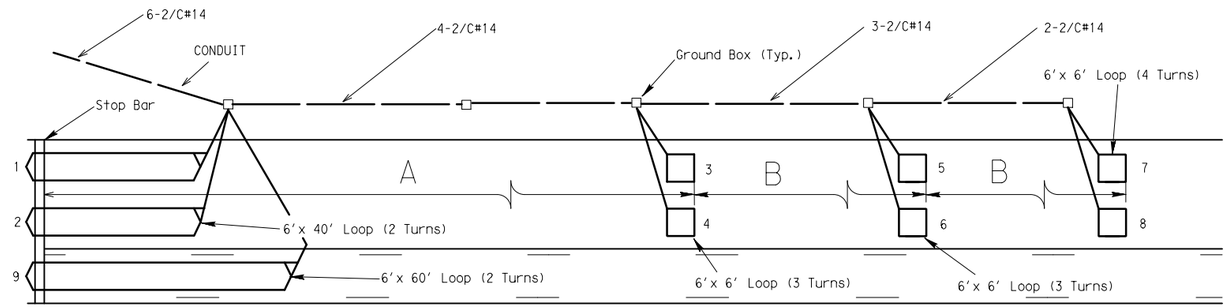

55 MPH (A=231', B=95') 60 MPH (A=281', B=100')
65 MPH (A=326', B=110') 70 MPH (A=356', B=125')

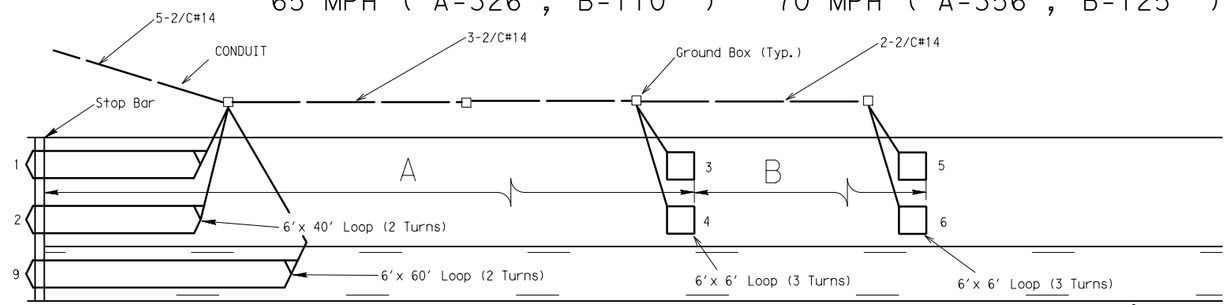

35 MPH (A=96', B=100') 40 MPH (A=116', B=130')
45 MPH (A=181', B=115') 50 MPH (A=226', B=130')

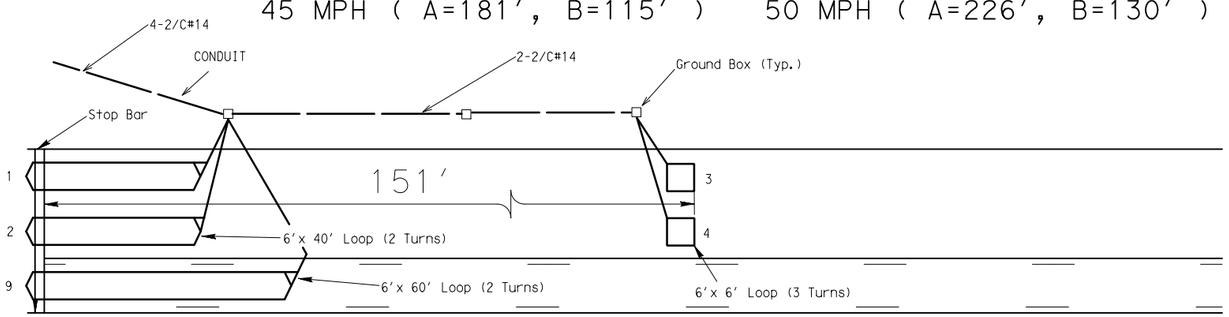

30 MPH

LOOP DETECTOR GENERAL NOTES (55 MPH TO 70 MPH):

Loops 1 and 2 shall be connected to the controller cabinet by means of the same loop lead-in (2/C #14 AWG).

Loops 3 and 4 shall be connected to the controller cabinet by means of the same loop lead-in (2/C #14 AWG).

Loops 5 and 6 shall be connected to the controller cabinet by means of the same loop lead-in (2/C #14 AWG).

Loops 7 and 8 shall be connected to the controller cabinet by means of individual loop lead-in (2/C#14 AWG)

Loop 9 shall be connected to the controller cabinet by means of a loop lead-in (2/C #14 AWG). Loop 9 shall be placed only when a left turn lane exists.

LOOP DETECTOR GENERAL NOTES (35 MPH TO 50 MPH):

Loops 1 and 2 shall be connected to the controller cabinet by means of the same loop lead-in (2/C #14 AWG).

Loops 3 and 4 shall be connected to the controller cabinet by means of the same loop lead-in (2/C #14 AWG).

Loops 5 and 6 shall be connected to the controller cabinet by means of individual loop lead-in (2/C #14 AWG).

Loop 9 shall be connected to the controller cabinet by means of a loop lead-in (2/C #14 AWG). Loop 9 shall be placed only when a left turn lane exists.

LOOP DETECTOR GENERAL NOTES (30 MPH):

Loops 1 and 2 shall be connected to the controller cabinet by means of the same loop lead-in (2/C #14 AWG).

Loops 3 and 4 shall be connected to the controller cabinet by means of individual loop lead-in (2/C #14 AWG).

Loop 9 shall be connected to the controller cabinet by means of a loop lead-in (2/C #14 AWG). Loop 9 shall be placed only when a left turn lane exists.

VIDEO DETECTION PLACEMENT DETAILS

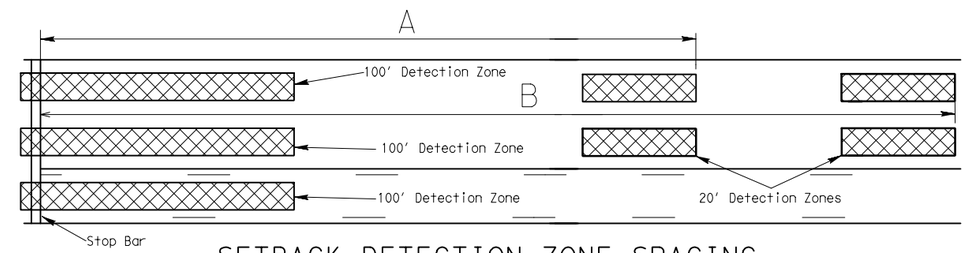

SETBACK DETECTION ZONE SPACING
(SPEEDS GREATER THAN OR EQUAL TO 45 MPH)

45 MPH (A=210', B=350') 50 MPH (A=235', B=390')
55 MPH (A=255', B=430') 60 MPH (A=280', B=470')
65 MPH (A=305', B=510') 70 MPH (A=330', B=550')

NOTE: SPEEDS EQUAL OR GREATER THAN 45 MPH WILL REQUIRE THE USE OF TWO VIVDS CAMERAS.

UTILIZATION OF CAMERA ONE FOR STOP BAR DETECTION AND CAMERA TWO FOR SET BACK DETECTION ZONES.

STOP BAR DETETCION ZONES SHALL BE PROVIDED FOR EACH LANE OF EACH APPROACH.

STOP BAR DETECTION AND SET BACK DETECTION SHOULD DRIVE A SEPARATE DETECTOR INPUT INTO THE CONTROLLER. IN ADDITION, DETECTORS IN EXCLUSIVE TURN LANES SHOULD DRIVE A SEPARATE DETECTOR INPUT INTO THE CONTROLLER. SEE TYPICAL LAYOUT BELOW.

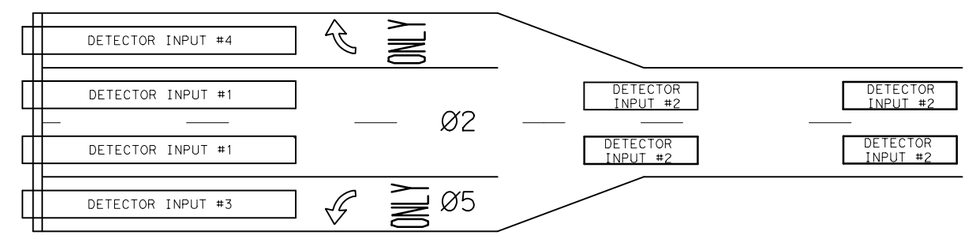

DETECTOR INPUT #	PHASE
1	Ø2 STOP BAR
2	Ø2 SET BACK
3	Ø5 STOP BAR
4	Ø2 RT LANE

NOTE:
ALL DETECTOR PLACEMENTS ARE BASED ON THE POSTED SPEED LIMIT

San Antonio District Standard

VEHICLE DETECTOR PLACEMENT DETAILS

VD(2)-06

© 2006 *Texas Department of Transportation*

REVISIONS	FED. RD. DIV. NO.	FEDERAL AID PROJECT NO.		SHEET NO.
FEB. 2006				479
	STATE	DIST.	COUNTY	
	CONT.	SECT.	JOB	HIGHWAY NO.

4:27:19 PM
2/21/2017
c:\pwworking\amy.coxe\d0472378\016-signaldet.dgn
ACC:
LEVELS DISPLAYED

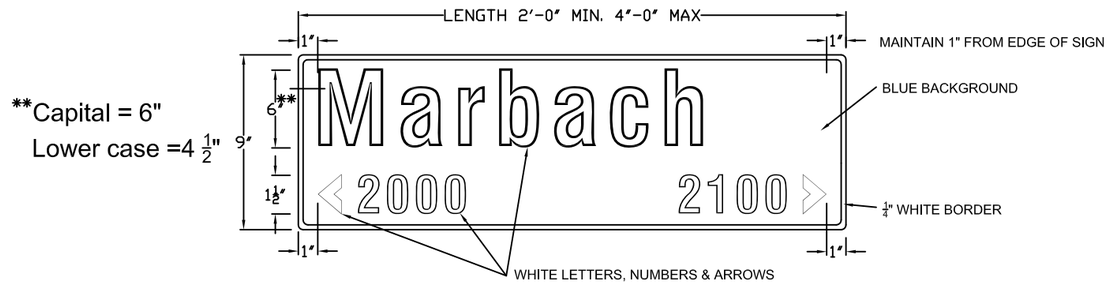

9" GROUND MOUNT STREET NAME SIGNS

	18" OVERHEAD SIGN	9" GROUND MOUNT SIGNS
HEIGHT	18" (381 mm)	9" (228 mm)
LENGTH	48" (1200 mm) MIN. 72" (1800 mm) MAX. 1' (300mm) INCREMENTS OF LENGTH	24" (600 mm) MIN. 48" (1200 mm) MAX. 6" (150mm) INCREMENTS OF LENGTH
THICKNESS	0.125" (3 mm)	
SUBSTRATE	ALUMINUM ALLOY, 5052-H38 (ASTM B-209 GOLD CHROMATE FINISH	
SIGN FACE MATERIALS	BLUE FILM ✳ OVER DIAMOND GRADE - ASTM Type XI Non-Fluorescent	BLUE FILM ✳ OVER HIGH INTENSITY PRISMATIC- ASTM Type IV
LEGENDS AND SYMBOLS	SERIES D, B OR C IF NAME OTHERWISE EXCEEDS MAXIMUM SIGN LENGTH	
COLOR	WHITE LEGEND ON BLUE BACKGROUND	
LETTER TRACKING	17% (USUAL) 10% (MIN.)	10%

✳ ACRYLIC ELECTRONIC CUTTABLE FILM

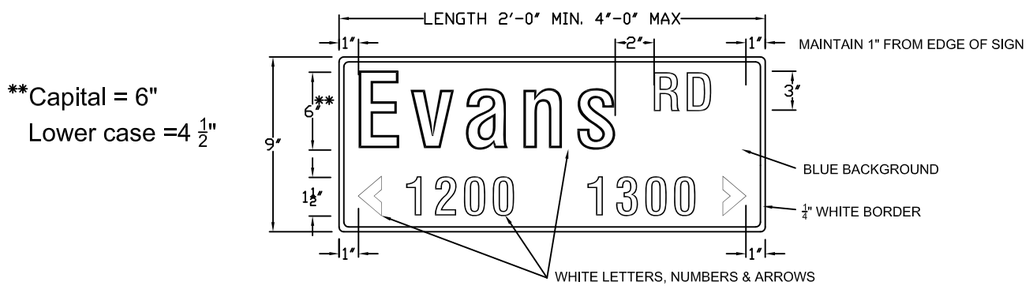

9" GROUND MOUNT STREET NAME SIGNS
WITH STREET DESIGNATION

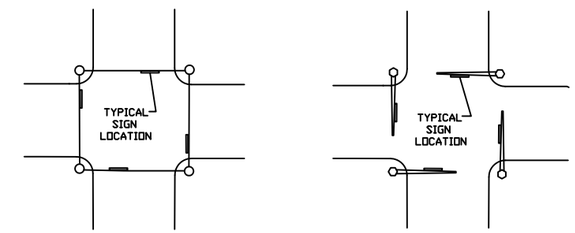

SPAN WIRE INSTALLATION

MAST ARM INSTALLATION

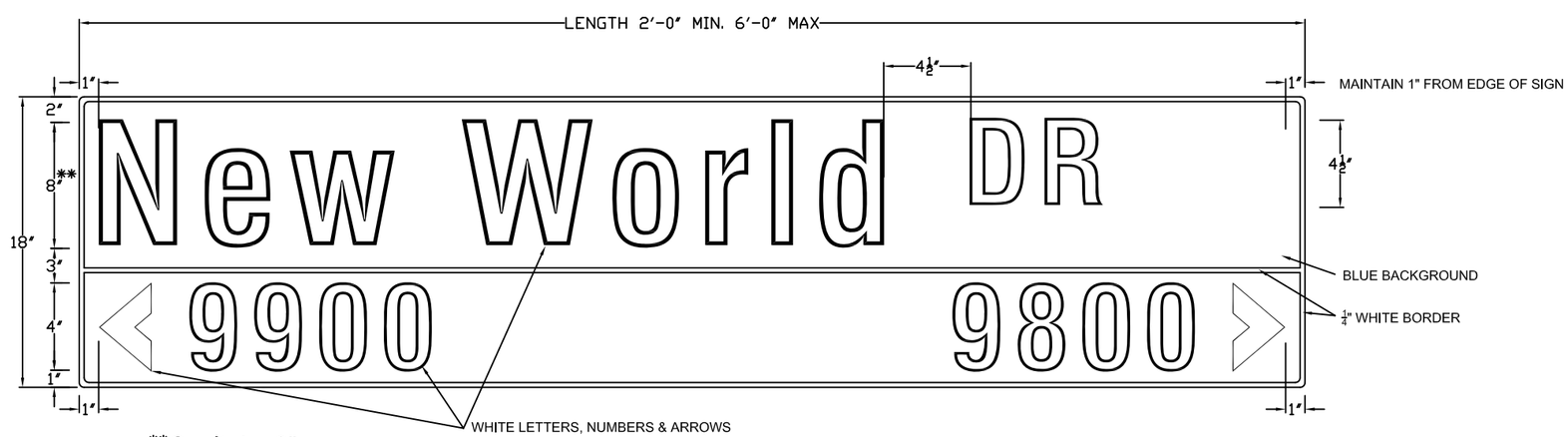

18" OVERHEAD STREET NAME SIGNS

SIGN FACE MATERIALS
SHALL CONFORM TO:

1. STANDARD SPECIFICATIONS FOR CONSTRUCTION OF ROADS & BRIDGES ON FEDERAL HIGHWAY PROJECTS - FP-03 U.S. CUSTOMARY UNITS SECTION 718
2. GENERAL SERVICES ADMINISTRATION FEDERAL SPECIFICATIONS L-S-300C
3. ASTM D 4956 - 09ε1

BEXAR COUNTY
PUBLIC WORKS DEPARTMENT

STREET NAME SIGNING DETAILS

REVISIONS:

DESIGN BY:	DRAWN BY:
MFT	MAE
CHECKED BY:	DATE:
MFT	06/20/11

FILE NO.: BCSNS01.Dwg

SHEET 480

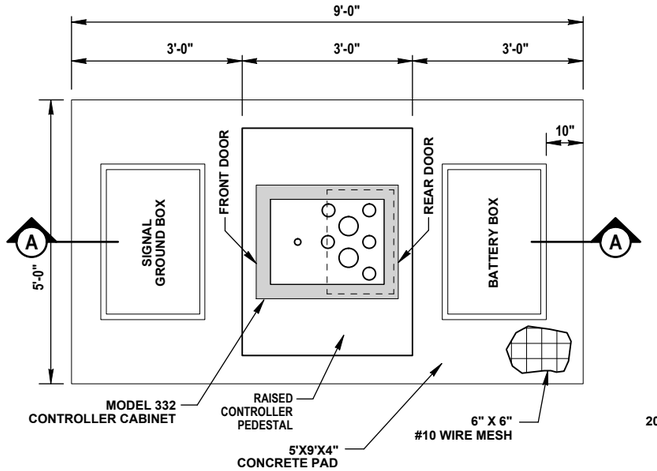

TOP VIEW

(NEW FOUNDATION)

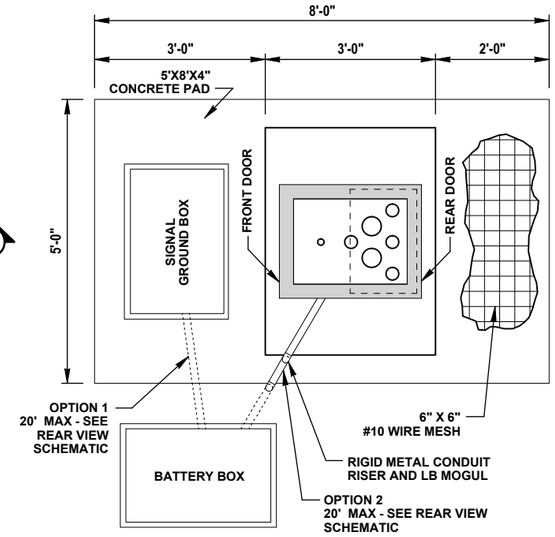

TOP VIEW

(RETROFITTED FOUNDATION)

OPTION 1:
USE AVAILABLE CONDUIT SPACE TO CONNECT WIRING FROM GROUNDBOX TO CABINET.

OPTION 2:
BBS CONDUIT AND CABLES TO BE ROUTED THROUGH EXISTING CONDUITS WHEN AVAILABLE. A 2" RMC WITH LB MOGUL MAY BE INSTALLED ON THE RIGHTSIDE (REARVIEW) OF THE CABINET FOR THE BBS CABLING IF NO SPARE CONDUITS ARE AVIAILABLE IN THE EXISTING FOUNDATION.

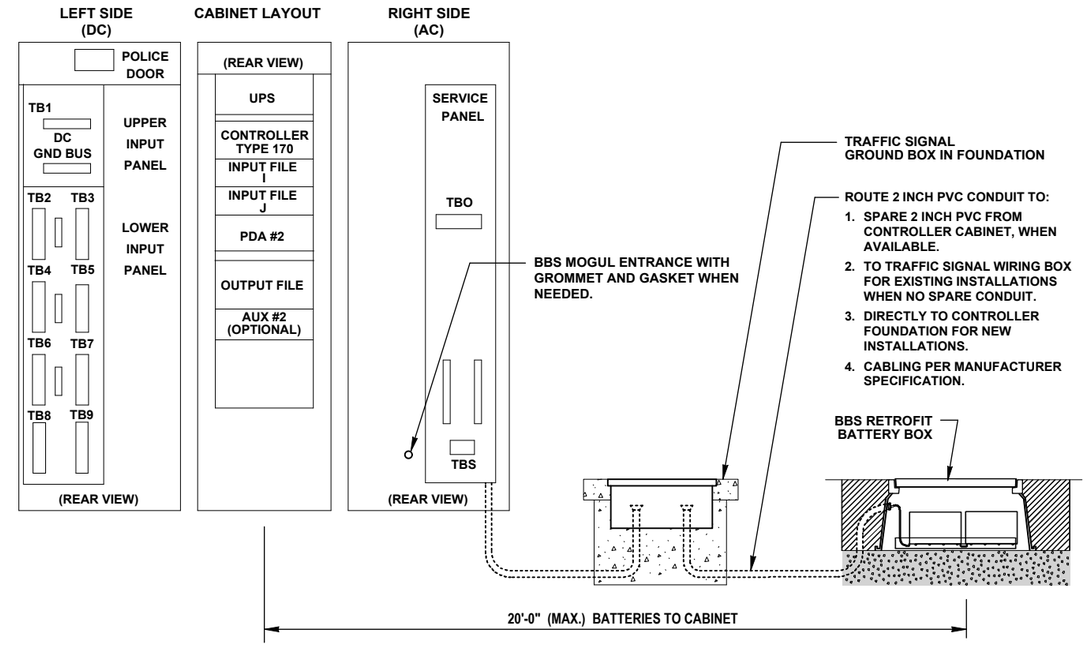

REAR VIEW SCHEMATIC

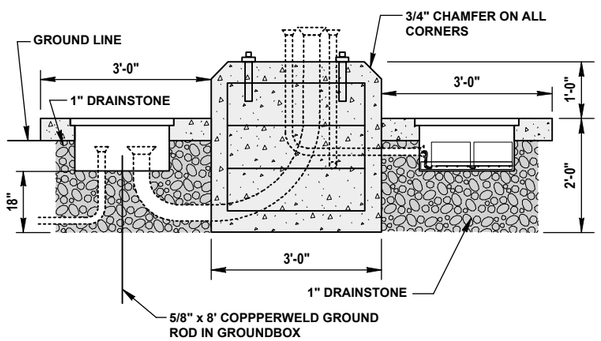

SECTION A-A

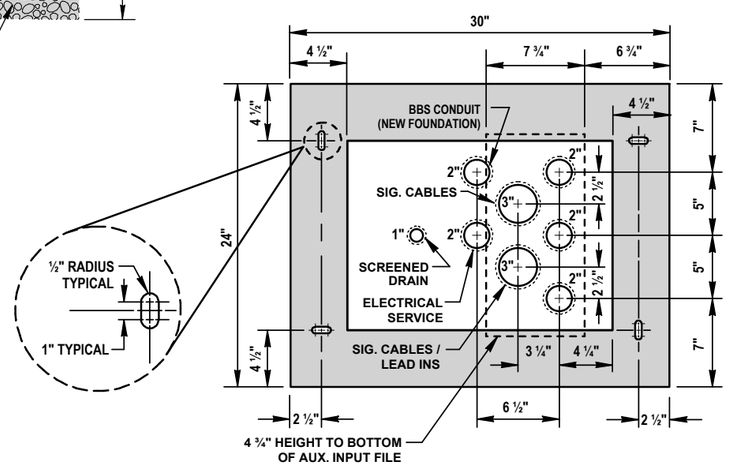

BASE PLATE TEMPLATE

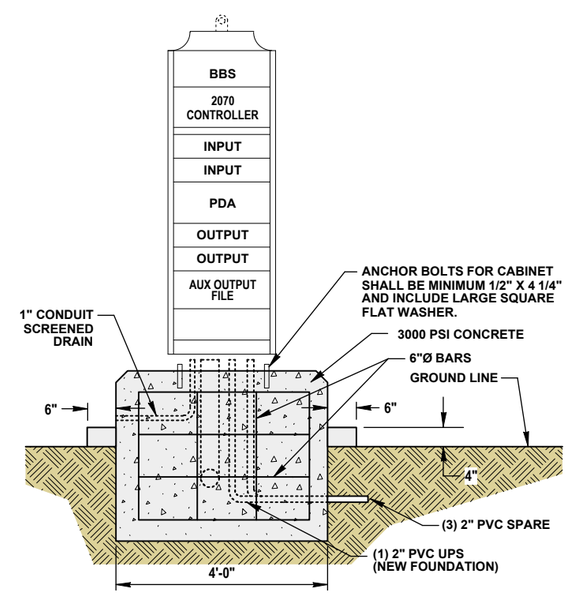

REAR VIEW

NOTES:

1. CONTRACTOR TO INSTALL GROUNDBOX, CONDUIT, CONTROLLER FOUNDATION, CONCRETE SLAB AND CONDUIT FROM GROUNDBOX TO CABINET. SEE BATTERY BACKUP SYSTEM SPECIFICATION FOR ADDITIONAL WIRING DETAILS.
2. FOR NEW FOUNDATIONS A DEDICATED BBS CONDUIT FROM THE FOUNDATION TO THE BATTERY BOX SHALL BE PROVIDED BY THE CONTRACTOR.

CITY OF SAN ANTONIO
Department of Public Works
TRAFFIC MANAGEMENT

TRAFFIC SIGNAL STANDARDS

TYPE 332 CABINET FOUNDATION WITH BATTERY BACKUP SYSTEM

DRWN: RB	CHKD: GG	DATE: 09/04/07	**TS-BBS-13** (SHEET 1 OF 1)
RVSD: MAB	APVD: DPW	DATE: 09/12/13	
RVSD:	APVD:	DATE:	481

DISCLAIMER: The use of this standard is governed by the "Texas Engineering Practice Act". No warranty of any kind is made by TxDOT for any purpose whatsoever. TxDOT assumes no responsibility for the conversion of this standard to other formats or for incorrect results or damages resulting from its use.

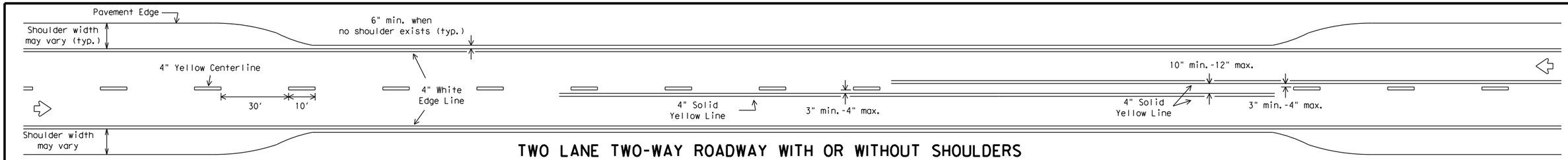

TWO LANE TWO-WAY ROADWAY WITH OR WITHOUT SHOULDERS

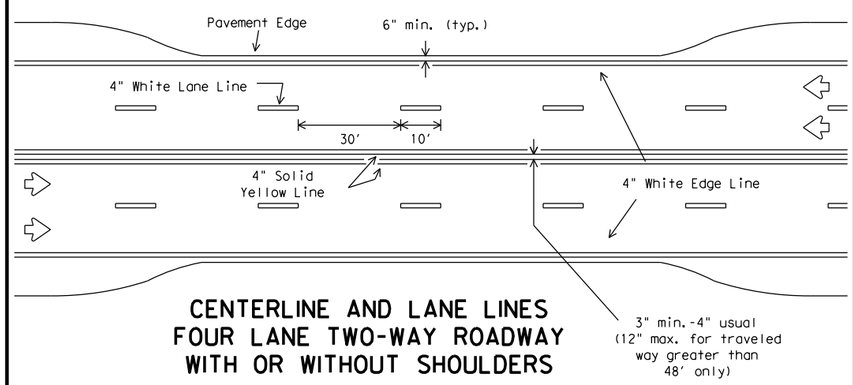

CENTERLINE AND LANE LINES FOUR LANE TWO-WAY ROADWAY WITH OR WITHOUT SHOULDERS

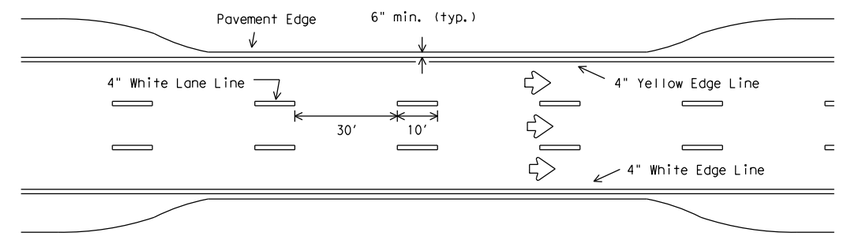

EDGE LINE AND LANE LINES ONE-WAY ROADWAY WITH OR WITHOUT SHOULDERS

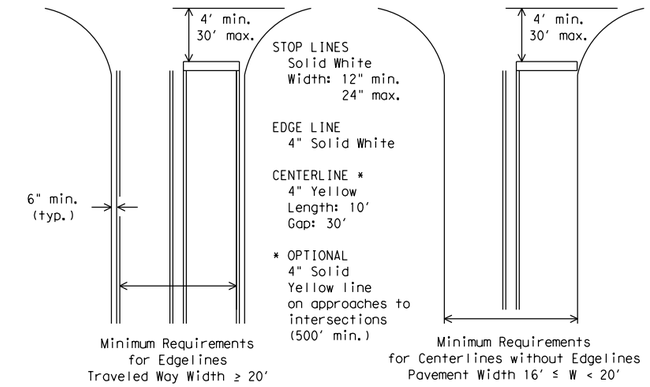

GUIDE FOR PLACEMENT OF STOP LINES, EDGE LINE & CENTERLINE

Based on Traveled Way and Pavement Widths for Undivided Highways

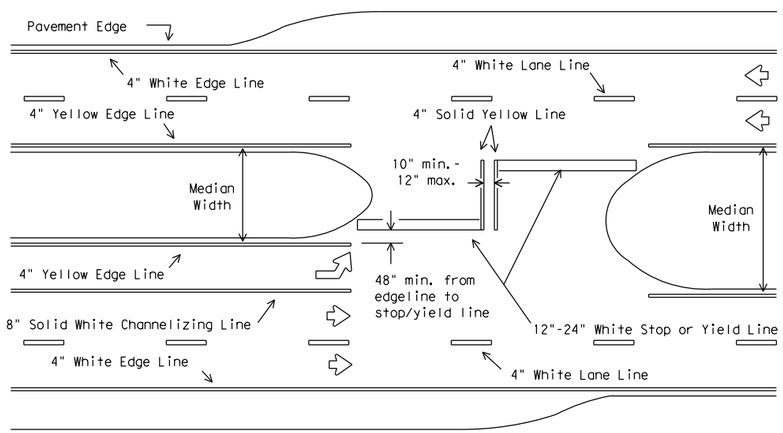

All medians shall be field measured to determine the location of necessary striping. Stop/Yield bars and centerlines shall be placed when the median width is greater than 30 ft. The median width is defined as the area between two roadways of a divided highway measured from edge of traveled way to edge of traveled way. The median excludes turn lanes. The median width might be different between intersections, interchanges and of opposite approaches of the same intersection. The narrow median width will be the controlling width to determine if markings are required.

FOUR LANE DIVIDED ROADWAY INTERSECTIONS

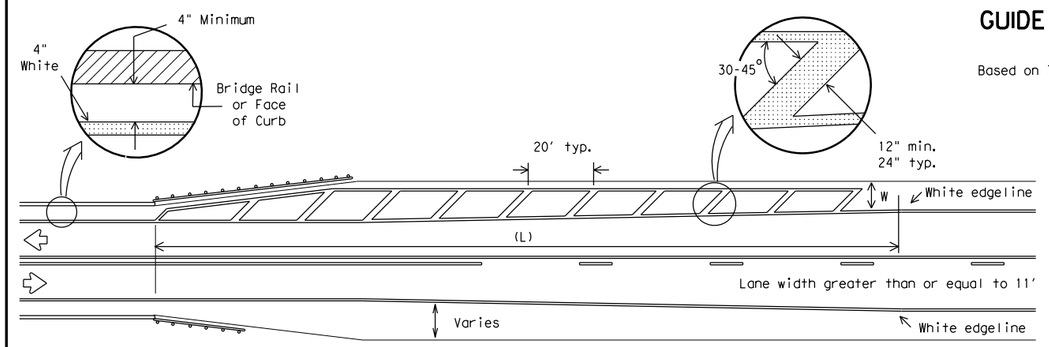

NOTES:

1. No-passing zone on bridge approach is optional but if used, it shall be a minimum 500 feet long.
2. For crosshatching length (L) see Table 1.
3. The width of the offset (W) and the required crosshatching width is the full shoulder width in advance of the bridge.
4. The crosshatching is not required if delineators or barrier reflectors are used along the structure.
5. For guard fence details, refer elsewhere in the plans.

ROADWAYS WITH REDUCED SHOULDER WIDTHS ACROSS BRIDGE OR CULVERT

TABLE 1 - TYPICAL LENGTH (L)

Posted Speed *	Formula
≤ 40	$L = \frac{WS^2}{60}$
≥ 45	L=WS

* 85th Percentile Speed may be used on roads where traffic speeds normally exceed the posted speed limit. Crosshatching length should be rounded up to nearest 5 foot increment.

L=Length of Crosshatching (FT.) W=Width of Offset (FT.)
S=Posted Speed (MPH)

EXAMPLES:

An 8 foot shoulder in advance of a bridge reduces to 4 feet on a 70 MPH roadway. The length of the crosshatching should be:

$L = 8 \times 70 = 560$ ft.

A 4 foot shoulder in advance of a bridge reduces to 2 feet on a 40 MPH roadway. The length of the crosshatching should be:

$L = 4(40)^2 / 60 = 106.67$ ft. rounded to 110 ft.

GENERAL NOTES

1. Edgeline striping shall be as shown in the plans or as directed by the Engineer. The edgeline should typically be placed a minimum of 6 inches from the edge of pavement. This distance may vary due to pavement raveling or other conditions. Edgelines are not required in curb and gutter sections of roadways.
2. The traveled way includes only that portion of the roadway used for vehicular travel and not the parking lanes, sidewalks, berms and shoulders. The traveled ways shall be measured from the inside of edgeline to inside of edgeline of a two lane roadway.

MATERIAL SPECIFICATIONS	
PAVEMENT MARKERS (REFLECTORIZED)	DMS-4200
EPOXY AND ADHESIVES	DMS-6100
BITUMINOUS ADHESIVE FOR PAVEMENT MARKERS	DMS-6130
TRAFFIC PAINT	DMS-8200
HOT APPLIED THERMOPLASTIC	DMS-8220
PERMANENT PREFABRICATED PAVEMENT MARKINGS	DMS-8240

All pavement marking materials shall meet the required Departmental Material Specifications as specified by the plans.

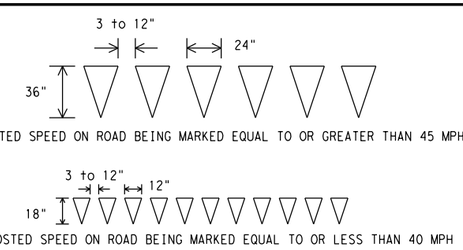

YIELD LINES

Texas Department of Transportation
Traffic Operations Division

TYPICAL STANDARD PAVEMENT MARKINGS

PM(1)-12

© TxDOT November 1978

DN: TXDOT	CK: TXDOT	DW: TXDOT	CK: TXDOT
CONT	SECT	JOB	HIGHWAY
DIST	COUNTY		SHEET NO.
			482

REVISIONS
8-95 2-12
5-00
8-00
3-03
22A

DATE:
FILE:

DISCLAIMER: The use of this standard is governed by the "Texas Engineering Practice Act". No warranty of any kind is made by TxDOT for any purpose whatsoever. TxDOT assumes no responsibility for the conversion of this standard to other formats or for incorrect results or damages resulting from its use.

REFLECTIVE RAISED PAVEMENT MARKERS FOR VEHICLE POSITIONING GUIDANCE

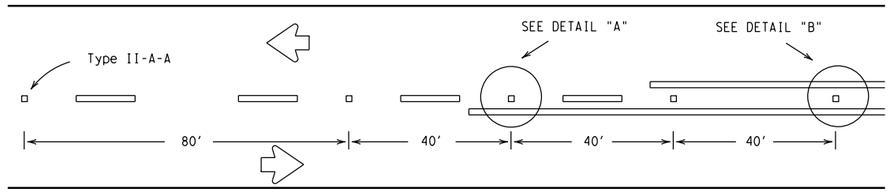

CENTERLINE FOR ALL TWO LANE ROADWAYS

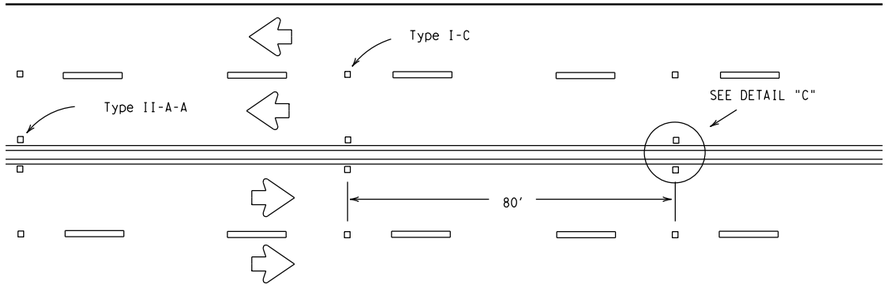

CENTERLINE & LANE LINES FOR FOUR LANE TWO-WAY HIGHWAYS

Raised pavement marker Type I-C, clear face toward normal traffic, shall be placed on 80-foot centers.

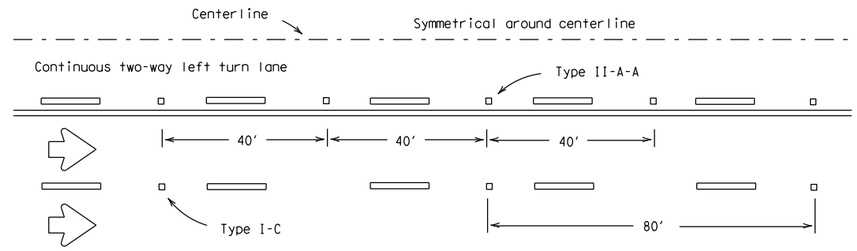

CENTERLINE AND LANE LINES FOR TWO-WAY LEFT TURN LANE

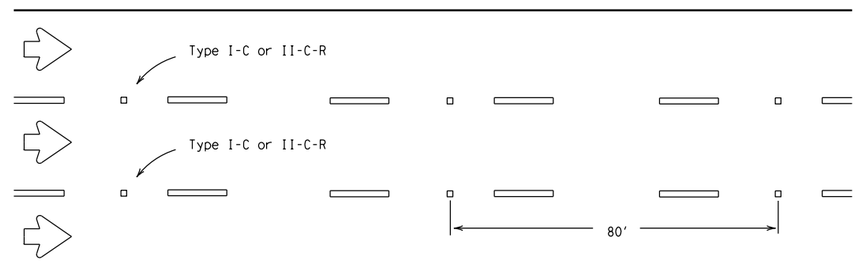

LANE LINES FOR ONE-WAY ROADWAY (NON-FREEWAY FACILITIES)

Raised pavement markers Type II-C-R shall have clear face toward normal traffic and red face toward wrong-way traffic.

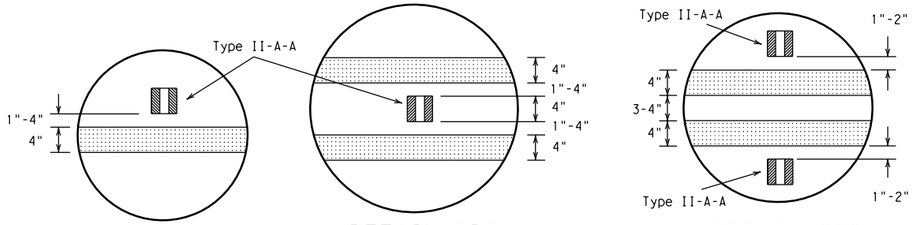

DETAIL "A" DETAIL "B" DETAIL "C"

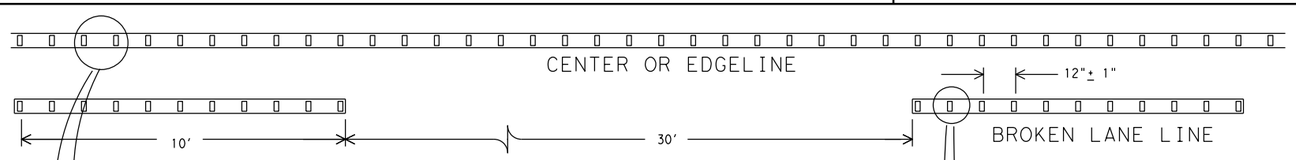

REFLECTORIZED PROFILE PATTERN DETAIL

USING REFLECTIVE PROFILE PAVEMENT MARKINGS

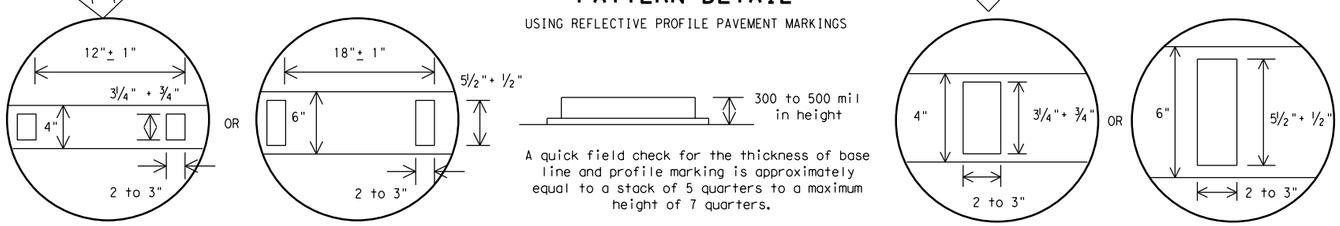

4" EDGE LINE OR CENTERLINE

OPTIONAL 6" EDGE LINE OR CENTERLINE

A quick field check for the thickness of base line and profile marking is approximately equal to a stack of 5 quarters to a maximum height of 7 quarters.

4" LANE LINE

OPTIONAL 6" LANE LINE

NOTE:

Profile markings shall not be placed on roadways with a posted speed limit of 45 MPH or less.

GENERAL NOTES

1. All raised pavement markers placed in broken lines shall be placed in line with and midway between the stripes.
2. On concrete pavements the raised pavement markers should be placed to one side of the longitudinal joints.

MATERIAL SPECIFICATIONS	
PAVEMENT MARKERS (REFLECTORIZED)	DMS-4200
EPOXY AND ADHESIVES	DMS-6100
BITUMINOUS ADHESIVE FOR PAVEMENT MARKERS	DMS-6130
TRAFFIC PAINT	DMS-8200
HOT APPLIED THERMOPLASTIC	DMS-8220
PERMANENT PREFABRICATED PAVEMENT MARKINGS	DMS-8240

All pavement marking materials shall meet the required Departmental Material Specifications as specified by the plans.

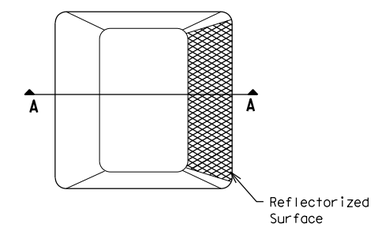

Type I (Top View)

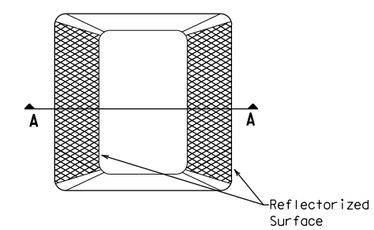

Type II (Top View)

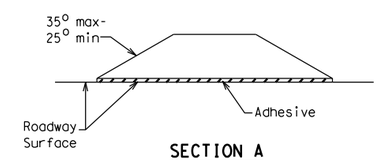

SECTION A

RAISED PAVEMENT MARKERS

Texas Department of Transportation
Traffic Operations Division

POSITION GUIDANCE USING RAISED MARKERS
REFLECTORIZED PROFILE MARKINGS

PM(2)-12

© TxDOT April 1977

DN: TXDOT	CK: TXDOT	DW: TXDOT	CK: TXDOT

REVISIONS
4-92 2-10
5-00 2-12
8-00
2-08

CONT	SECT	JOB	HIGHWAY

DIST	COUNTY	SHEET NO.
		483

22B

DATE:
FILE:

DISCLAIMER: The use of this standard is governed by the "Texas Engineering Practice Act". No warranty of any kind is made by TxDOT for any purpose whatsoever. TxDOT assumes no responsibility for the conversion of this standard to other formats or for incorrect results or damages resulting from its use.

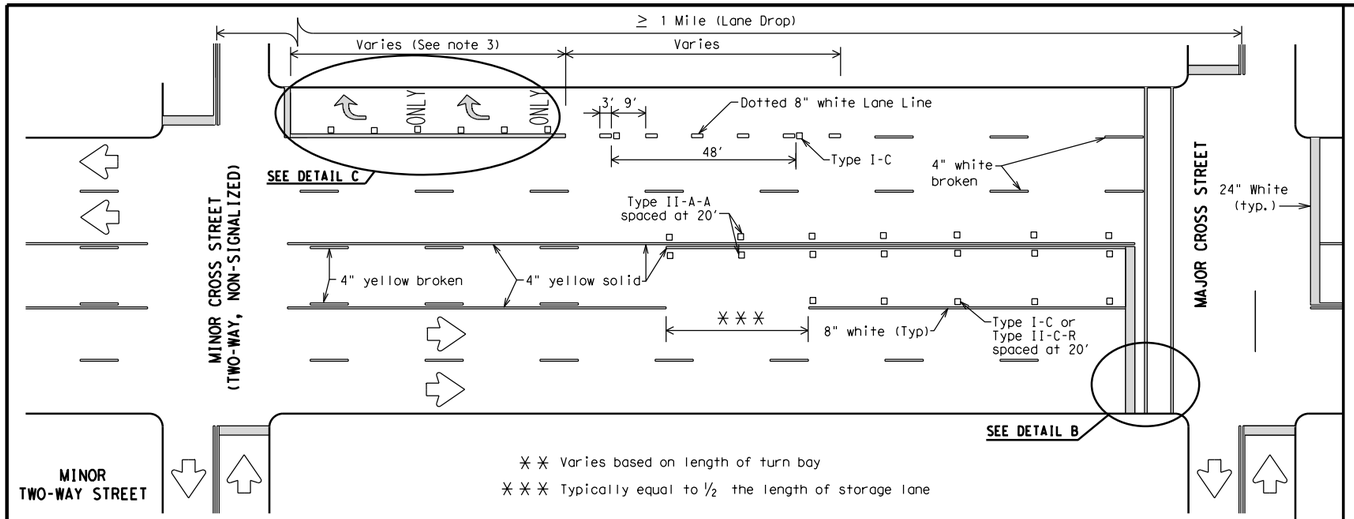

TYPICAL TWLTL AT TWO-WAY CROSS STREET AND RIGHT TURN LANE DROP

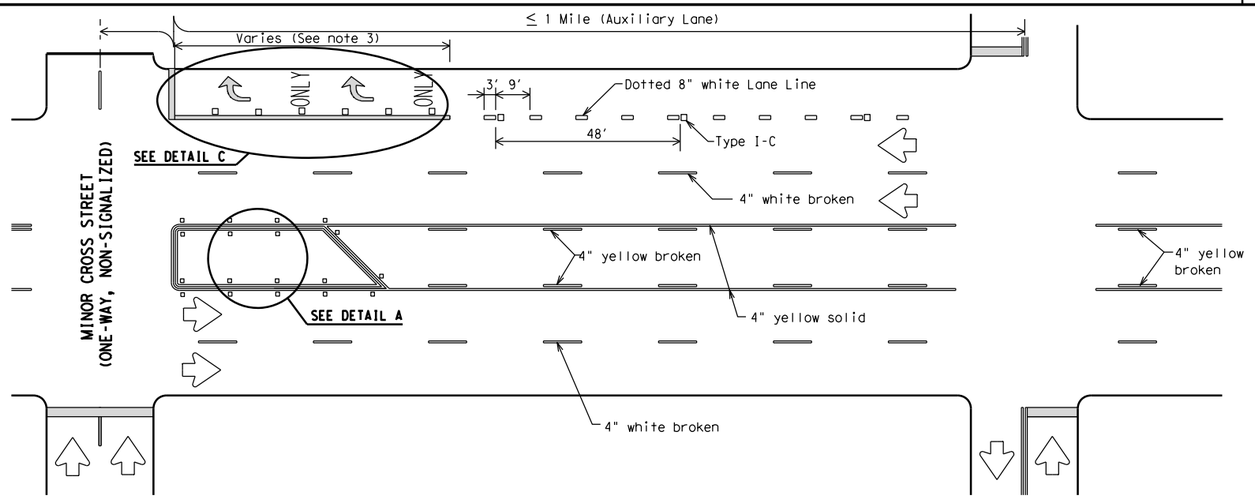

TYPICAL TWLTL AT ONE-WAY STREET AND RIGHT TURN AUXILIARY LANE

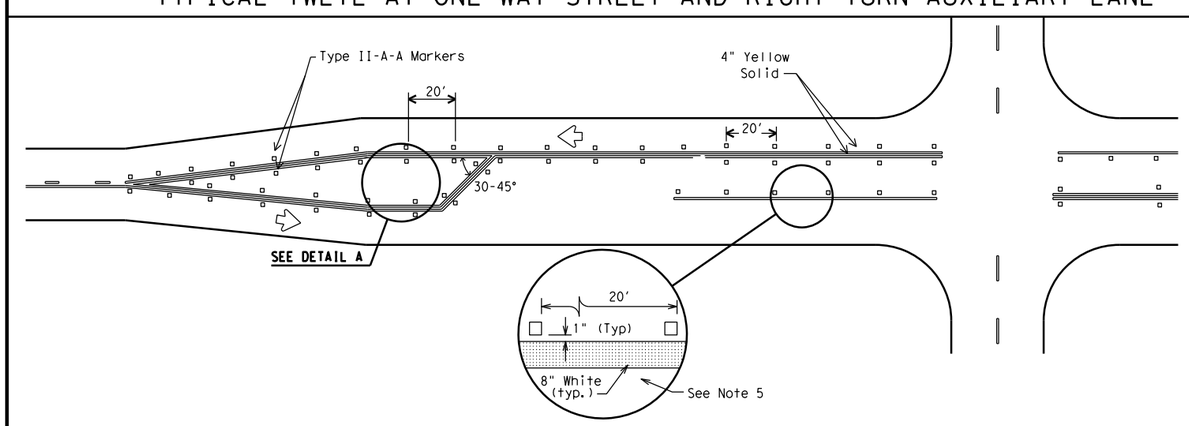

TYPICAL TWO-LANE HIGHWAY INTERSECTION WITH LEFT TURN BAYS

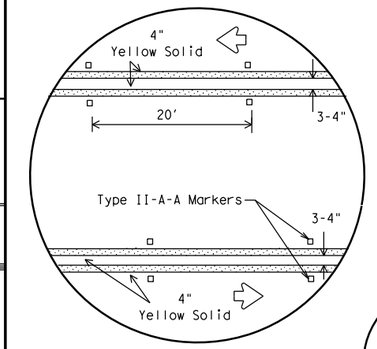

DETAIL A

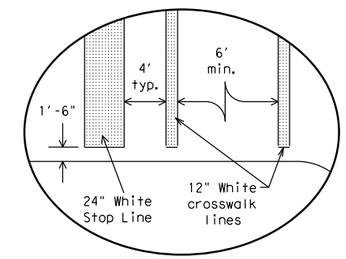

Final placement of Stop Bar and Crosswalk shall be approved by the Engineer in the field.

DETAIL B

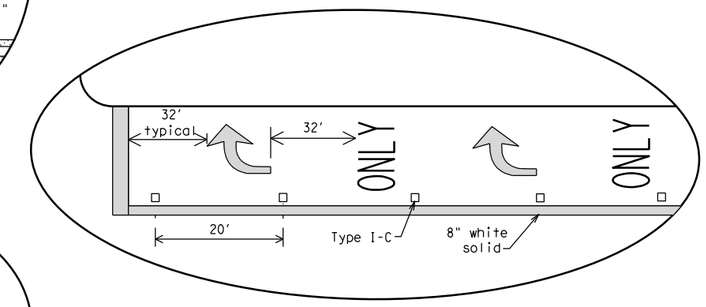

DETAIL C

MATERIAL SPECIFICATIONS	
PAVEMENT MARKERS (REFLECTORIZED)	DMS-4200
EPOXY AND ADHESIVES	DMS-6100
BITUMINOUS ADHESIVE FOR PAVEMENT MARKERS	DMS-6130
TRAFFIC PAINT	DMS-8200
HOT APPLIED THERMOPLASTIC	DMS-8220
PERMANENT PREFABRICATED PAVEMENT MARKINGS	DMS-8240

All pavement marking materials shall meet the required Departmental Material Specifications as specified by the plans.

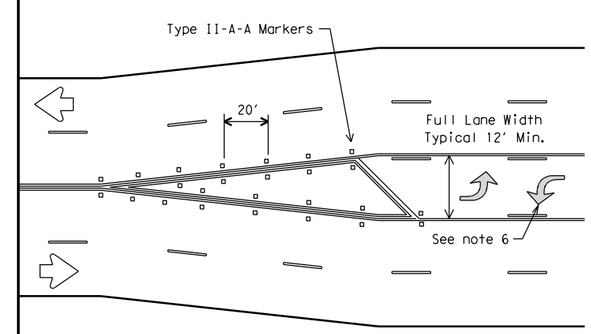

TYPICAL TRANSITION FOR TWLTL AND DIVIDED HIGHWAY

GENERAL NOTES

1. Refer elsewhere in plans for additional RPM placement and details.
2. Lane use word and arrow markings shall be used where through lanes approaching an intersection become mandatory turn lanes. Lane use word and arrow markings should be used in auxiliary lanes of substantial length. Lane use arrow markings or word and arrow markings may be used in other lanes and turn bays for emphasis. Details for words and arrows as shown in the Standard Highway Sign Designs for Texas.
3. When lane used word and arrow markings are used, two sets of arrows should be used if the length of the bay is greater than 180 feet. When a single lane use arrow or word and arrow marking is used for a short turn lane, it should be located at or near the upstream end of the full-width turn lane.
4. Other crosswalk patterns as shown in the "Texas Manual on Uniform Traffic Control Devices" may be used.
5. Raised pavement marker Type I-C with undivided highways, flush medians and two way left turn lanes. Raised pavement marker Type II-C-R with divided highways and raised medians.
6. A two-way left-turn (TWLT) lane-use arrow pavement marking should be used at or just downstream from the beginning of a two-way left-turn lane within a corridor. Repeating the marking after each intersection or dedicated turn bay is not required unless stated elsewhere in the plans.

Texas Department of Transportation
Traffic Operations Division

PAVEMENT MARKINGS FOR TWO-WAY LEFT TURN LANES DIVIDED HIGHWAYS AND RURAL LEFT TURN BAYS

PM(3)-12

© TxDOT April 1998

REVISIONS		DN: TXDOT	CK: TXDOT	DW: TXDOT	CK: TXDOT
5-00	2-12	CONT	SECT	JOB	HIGHWAY
8-00					
3-03		DIST		COUNTY	SHEET NO.
2-10					484

22C

DATE:
FILE:

DISCLAIMER:
The use of this standard is governed by the "Texas Engineering Practice Act". No warranty of any kind is made by TxDOT for any purpose whatsoever. TxDOT assumes no responsibility for the conversion of this standard to other formats or for incorrect results or damages resulting from its use.

REQUIREMENTS FOR INDEPENDENT MOUNTED ROUTE SIGNS

SHEETING REQUIREMENTS		
USAGE	COLOR	SIGN FACE MATERIAL
BACKGROUND	WHITE	TYPE A SHEETING
BACKGROUND	ALL OTHERS	TYPE B OR C SHEETING
LEGEND & BORDERS	WHITE	TYPE A SHEETING
LEGEND & BORDERS	BLACK	ACRYLIC NON-REFLECTIVE FILM
LEGEND & BORDERS	ALL OTHERS	TYPE B or C SHEETING

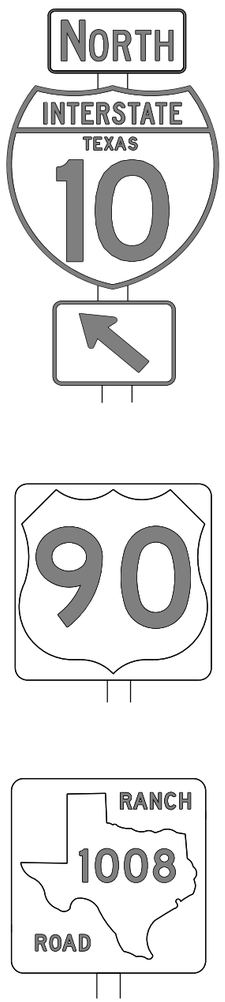

TYPICAL EXAMPLES

REQUIREMENTS FOR BLUE, BROWN & GREEN D AND I SERIES GUIDE SIGNS

SHEETING REQUIREMENTS		
USAGE	COLOR	SIGN FACE MATERIAL
BACKGROUND	ALL	TYPE B OR C SHEETING
LEGEND & BORDERS	WHITE	TYPE D SHEETING
LEGEND, SYMBOLS & BORDERS	ALL OTHERS	TYPE B OR C SHEETING

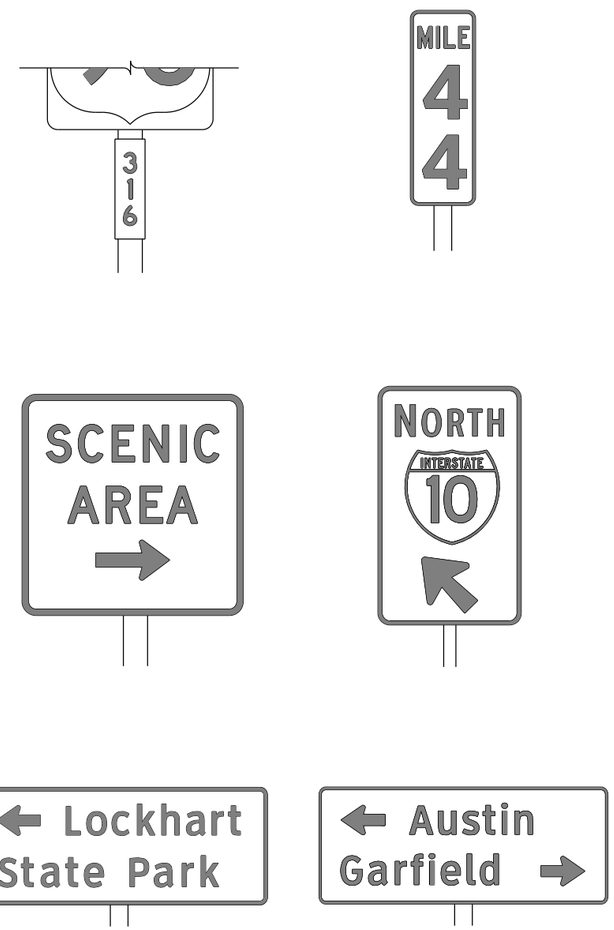

TYPICAL EXAMPLES

GENERAL NOTES

1. Signs to be furnished shall be as detailed elsewhere in the plans and/or as shown on sign tabulation sheet. Standard sign designs and arrow dimensions can be found in the "Standard Highway Sign Designs for Texas" (SHSD).
2. White legend shall use the Clearview Alphabet. The following Clearview fonts shall be used to replace the existing white Federal Highway Administration (FHWA) Standard Highway Alphabets, when not specified in the SHSD, or in the plans.

B	CV-1W
C	CV-2W
D	CV-3W
E	CV-4W
Emod	CV-5WR
F	CV-6W

3. Route sign legend (ie. IH, US, SH and FM shields) shall use the Federal Highway Administration (FHWA) Standard Highway Alphabets B, C, D, E, Emod or F).
4. Lateral spacing between letters and numerals shall conform with the SHSD, and any approved changes thereto. Lateral spacing of legend shall provide a balanced appearance when spacing is not shown.
5. Independent mounted route sign with white or colored legend and borders shall be applied by screening process with transparent color ink, transparent colored overlay film to white background sheeting or cut-out white sheeting to colored background sheeting, or combination thereof. White legend, symbols and borders on all other signs shall be cut-out white sheeting applied to colored background sheeting.
6. Information regarding borders and radii for signs is found in the "Standard Highway Sign Designs for Texas". Dimensions shown and described for borders and corner radii on parent sign are nominal. Borders may vary in width as much as 1/2 inch. Corner radii above 3 inches may vary in width as much as 1 inch. Borders and corner radii within a parent sign must be of matching widths. The sign area outside the corner radius should be trimmed or rounded.
7. Sign substrate shall be any material that meets the Departmental Material Specification requirements of DMS-7110 or approved alternative.
8. Mounting details of roadside signs are shown in the "SMD series" Standard Plan Sheets.

DEPARTMENTAL MATERIAL SPECIFICATIONS	
ALUMINUM SIGN BLANKS	DMS-7110
SIGN FACE MATERIALS	DMS-8300

ALUMINUM SIGN BLANKS THICKNESS	
Square Feet	Minimum Thickness
Less than 7.5	0.080
7.5 to 15	0.100
Greater than 15	0.125

The Standard Highway Sign Designs for Texas (SHSD) can be found at the following website.

http://www.txdot.gov/

Texas Department of Transportation

Traffic Operations Division Standard

TYPICAL SIGN REQUIREMENTS

TSR(3)-13

FILE: tsr3-13.dgn	DN: TxDOT	CK: TxDOT	DW: TxDOT	CK: TxDOT
©TxDOT October 2003	CONT	SECT	JOB	HIGHWAY
REVISIONS				
12-03 7-13	DIST	COUNTY		SHEET NO.
9-08				485

DATE:
FILE:

DISCLAIMER:
The use of this standard is governed by the "Texas Engineering Practice Act". No warranty of any kind is made by TxDOT for any purpose whatsoever. TxDOT assumes no responsibility for the conversion of this standard to other formats or for incorrect results or damages resulting from its use.

REQUIREMENTS FOR RED BACKGROUND REGULATORY SIGNS

(STOP, YIELD, DO NOT ENTER AND WRONG WAY SIGNS)

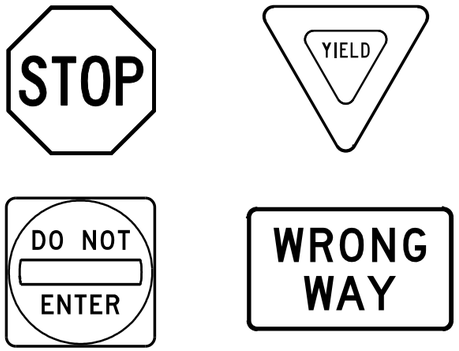

REQUIREMENTS FOR FOUR SPECIFIC SIGNS ONLY

SHEETING REQUIREMENTS		
USAGE	COLOR	SIGN FACE MATERIAL
BACKGROUND	RED	TYPE B OR C SHEETING
BACKGROUND	WHITE	TYPE B OR C SHEETING
LEGEND & BORDERS	WHITE	TYPE B OR C SHEETING
LEGEND	RED	TYPE B OR C SHEETING

REQUIREMENTS FOR WHITE BACKGROUND REGULATORY SIGNS

(EXCLUDING STOP, YIELD, DO NOT ENTER AND WRONG WAY SIGNS)

TYPICAL EXAMPLES

SHEETING REQUIREMENTS		
USAGE	COLOR	SIGN FACE MATERIAL
BACKGROUND	WHITE	TYPE A SHEETING
BACKGROUND	ALL OTHERS	TYPE B OR C SHEETING
LEGEND, BORDERS AND SYMBOLS	BLACK	ACRYLIC NON-REFLECTIVE FILM
LEGEND, BORDERS AND SYMBOLS	ALL OTHER	TYPE B OR C SHEETING

GENERAL NOTES

1. Signs to be furnished shall be as detailed elsewhere in the plans and/or as shown on sign tabulation sheet. Standard sign designs and arrow dimensions can be found in the "Standard Highway Sign Designs for Texas" (SHSD).
2. Sign legend shall use the Federal Highway Administration (FHWA) Standard Highway Alphabets (B, C, D, E, Emod or F).
3. Lateral spacing between letters and numerals shall conform with the SHSD, and any approved changes thereto. Lateral spacing of legend shall provide a balanced appearance when spacing is not shown.
4. Black legend and borders shall be applied by screening process or cut-out acrylic non-reflective black film to background sheeting, or combination thereof.
5. White legend and borders shall be applied by screening process with transparent colored ink, transparent colored overlay film to white background sheeting or cut-out white sheeting to colored background sheeting, or combination thereof.
6. Colored legend shall be applied by screening process with transparent colored ink, transparent colored overlay film or colored sheeting to background sheeting, or combination thereof.
7. Sign substrate shall be any material that meets the Departmental Material Specification requirements of DMS-7110 or approved alternative.
8. Mounting details for roadside mounted signs are shown in the "SMD series" Standard Plan Sheets.

ALUMINUM SIGN BLANKS THICKNESS	
Square Feet	Minimum Thickness
Less than 7.5	0.080
7.5 to 15	0.100
Greater than 15	0.125

DEPARTMENTAL MATERIAL SPECIFICATIONS	
ALUMINUM SIGN BLANKS	DMS-7110
SIGN FACE MATERIALS	DMS-8300

The Standard Highway Sign Designs for Texas (SHSD) can be found at the following website.

http://www.txdot.gov/

REQUIREMENTS FOR WARNING SIGNS

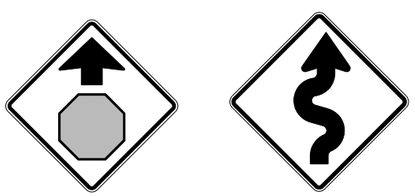

TYPICAL EXAMPLES

SHEETING REQUIREMENTS		
USAGE	COLOR	SIGN FACE MATERIAL
BACKGROUND	FLOURESCENT YELLOW	TYPE B_{FL} OR C_{FL} SHEETING
LEGEND & BORDERS	BLACK	ACRYLIC NON-REFLECTIVE FILM
LEGEND & SYMBOLS	ALL OTHER	TYPE B OR C SHEETING

REQUIREMENTS FOR SCHOOL SIGNS

TYPICAL EXAMPLES

SHEETING REQUIREMENTS		
USAGE	COLOR	SIGN FACE MATERIAL
BACKGROUND	WHITE	TYPE A SHEETING
BACKGROUND	FLOURESCENT YELLOW GREEN	TYPE B_{FL} OR C_{FL} SHEETING
LEGEND, BORDERS AND SYMBOLS	BLACK	ACRYLIC NON-REFLECTIVE FILM
SYMBOLS	RED	TYPE B OR C SHEETING

Texas Department of Transportation

Traffic Operations Division Standard

TYPICAL SIGN REQUIREMENTS

TSR(4)-13

FILE: tsr4-13.dgn	DN: TxDOT	CK: TxDOT	DW: TxDOT	CK: TxDOT
© TxDOT October 2003	CONT	SECT	JOB	HIGHWAY
REVISIONS 12-03 7-13 9-08	DIST	COUNTY		SHEET NO. 486

DATE:
FILE:

4

DISCLAIMER:
The use of this standard is governed by the "Texas Engineering Practice Act". No warranty of any kind is made by TxDOT for any purpose whatsoever. TxDOT assumes no responsibility for the conversion of this standard to other formats or for incorrect results or damages resulting from its use.

REFLECTOR UNIT SIZES FOR DELINEATORS AND OBJECT MARKERS

	SIZE 1	SIZE 2	SIZE 3	SIZE 4
DEVICE	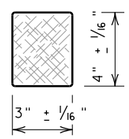	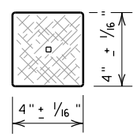	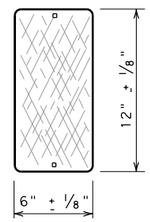	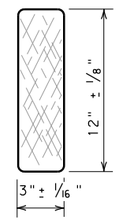
SHEETING	Yellow, White or Red Type B or C reflective sheeting			
NOTE	1. Size 1 and 4 - Direct applied reflective sheeting for use on flexible post (flx). 2. Size 2 and 3 - For use on wing channel (wc) post only. Use approved metal, plastic or fiberglass backplate with 17/64" mounting holes.			

DELINEATORS

	SINGLE		DOUBLE	
DEVICE	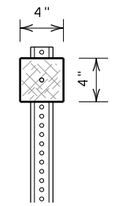	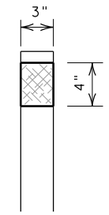	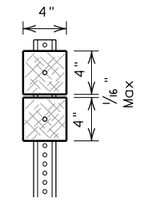	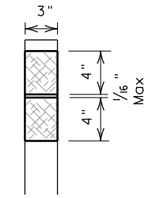
	1-Size 2 reflector unit	1-Size 1 reflector unit	2-Size 2 reflector units	2-Size 1 reflector units
SHEETING	Yellow, White or Red Type B or C Reflective Sheeting			
POST TYPE	WC	FLX	WC	FLX
MOUNT TYPE	GND	GND, SRF	GND	GND, SRF

OBJECT MARKERS

	Type 1 (OM-1)	Type 2 (OM-2)			Type 3 (OM-3)			Type 4 (OM-4)
	OM-1	OM-2X	OM-2Y	OM-2Z	OM-3L	OM-3R	OM-3C	OM-4
DEVICE	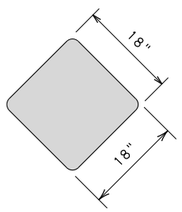	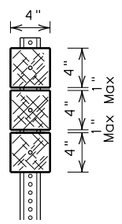	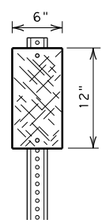	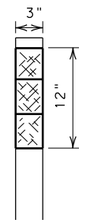	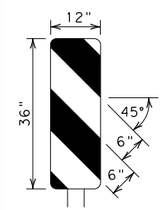	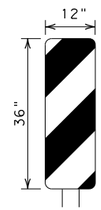	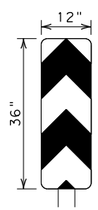	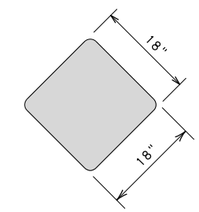
		3-Size 2 reflector units	1-Size 3 reflector unit	3-Size 1 reflector units or 1-Size 4 reflector unit				
SHEETING	Yellow-Type B_{FL} or C_{FL} Sheeting	Yellow - Type B or C Sheeting			Alternating acrylic black and retroflective yellow - Type B_{FL} or C_{FL} Sheeting			Red -Type B_{FL} or C_{FL} Sheeting
POST TYPE	TWT	WC	WC	FLX	TWT			TWT
MOUNT TYPE	WAS, WAP	GND	GND	GND, SRF	WAS, WAP			WAS, WAP

D & OM DESCRIPTIVE CODES

INSTL DEL ASSM (D-XX)SZ X (XXX)XXX(XX)

NUMBER OF REFLECTORS
- S = Single
- D = Double

COLOR OF REFLECTORS
- W = White
- Y = Yellow
- R = Red

REFLECTOR UNIT SIZE
- 1 or 2

TYPE OF POST OR DELINEATOR
- WC = Wing Channel Post
- FLX = Flexible Post
- BRF = Barrier Reflector

TYPE OF MOUNT
- GND = Embedded (drivable or set in concrete)
- CTB = Concrete Barrier Mount
- GF1 or GF2 = Guard Fence Attachment
- SRF = Surface Mount

DIRECTION
- If Required
- BI = Bi-Directional
- BR = Bi-Directional with red on back

INSTL OM ASSM (OM-XX) (XXX)XXX(XX)

TYPE OF OBJECT MARKER
- 1, 2, 3, or 4

NUMBER OF REFLECTORS OR DIRECTION
- X = 3-Size 2 reflector units (Type 2 only)
- Y = 1-Size 3 reflector unit (Type 2 only)
- Z = 3-Size 1 or 1-Size 4 reflector unit(s)(Type 2 only)
- L = Left Side (Type 3 Object Marker only)
- R = Right Side (Type 3 Object Marker only)
- C = Center (Type 3 Object Marker only)

TYPE OF POST
- WC = Wing Channel Post
- FLX = Flexible Post
- TWT = Thin Walled Tubing

TYPE OF MOUNT
- GND = Embedded (drivable)
- SRF = Surface Mount
- WAS = Wedge Anchor Steel
- WAP = Wedge Anchor Plastic

DIRECTION
- If Required
- BI = Bi-Directional

DEPARTMENTAL MATERIAL SPECIFICATIONS	
FLEXIBLE DELINEATOR & OBJECT MARKER POSTS (EMBEDDED & SURFACE MOUNT TYPES)	DMS-4400
SIGN FACE MATERIALS	DMS-8300
DELINEATORS, OBJECT MARKERS AND BARRIER REFLECTORS	DMS-8600

BARRIER REFLECTORS (BRF)

	GF1	GF2	CTB
DEVICE	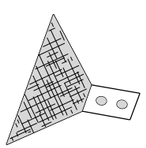		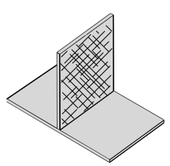
	1. Barrier reflectors shall meet the requirements of DMS 8600. 2. Approved Barrier Reflectors are listed on the "Barrier Reflectors" Material Producer List at: www.txdot.gov.		
SHEETING	Yellow, White, Red		
NOTE	1. Minimum 9 square inches of reflective sheeting surface area.		

CHEVRONS

DEVICE	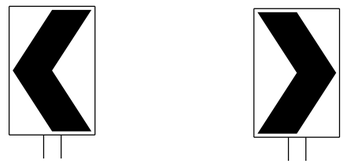 W1-8			
SIZE (W x L)	18"x 24" (Conventional)	24"x 30" (Conventional Oversize)	30"x 36" (Expressway)	36" x 48" (Freeway)
MOUNTING HEIGHT	4'-0" or 7'-0"		7'-0" Only	
NOTE	1. CHEVRON (W1-8) signs and ONE DIRECTION LARGE ARROW (W1-6) Signs shall be installed per Sign Mounting Details (SMD) Standard Sheets and paid under Item 644 (Small Roadside Sign Assemblies). 2. The Texas version of the ONE DIRECTION LARGE ARROW sign (W1-9T) may be used instead of the ONE DIRECTIONAL LARGE ARROW (W1-6).			

ONE DIRECTION LARGE ARROW

DEVICE	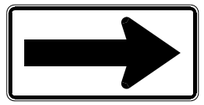 W1-6	
SIZE (W x L)	48" x 24" (Conventional)	60" x 30" (Expressway & Freeway)
MOUNTING HEIGHT	7'-0"	

NOTE:

Delineator and object marker backplates and sign substrates shall be 0.080" Aluminum sign blank to conform to ASTM B-209 Alloy 6061-T6 or approved alternative.

Texas Department of Transportation — Traffic Operations Division Standard

DELINEATOR & OBJECT MARKER MATERIAL DESCRIPTION

D & OM(1)-15

FILE: dom1-15.dgn	DN: TXDOT	CK: TXDOT	DW: TXDOT	CK: TXDOT
©TxDOT August 2004	CONT	SECT	JOB	HIGHWAY
REVISIONS				
10-09 3-15	DIST	COUNTY		SHEET NO.
4-10				487

DATE:
FILE:

POST TYPE AND SUPPORT FOUNDATION DETAILS

WING CHANNEL (WC)

GND

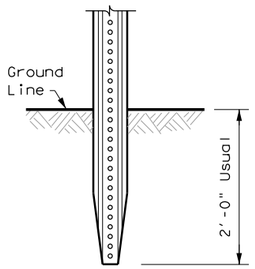

NOTES

1. Embedded Wing Channel (WC) post option may be used for Type 2 Object Markers and Delineators only.
2. 1.12 lbs/ft steel per ASTM A 1011 SS Gr. 50, or ASTM A499.

FLEXIBLE POSTS (FLX)

GND

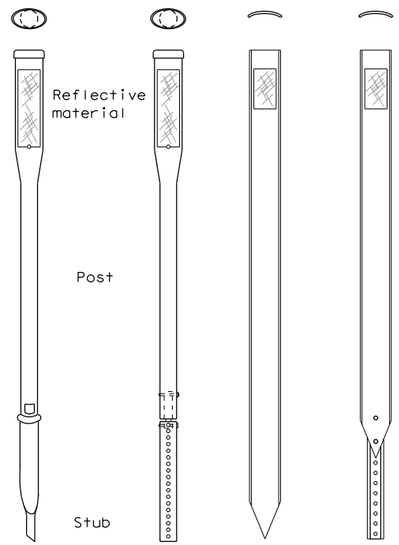

EMBEDDED

SRF

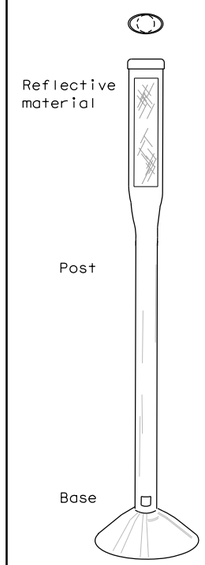

SURFACE MOUNT

NOTES

1. See "Flexible Delineator and Object Marker Posts" Material Producer List for approved devices.
2. Install per manufacturer's recommendations.
3. Post length may vary to meet field conditions.

WEDGE ANCHOR SYSTEMS

WAS

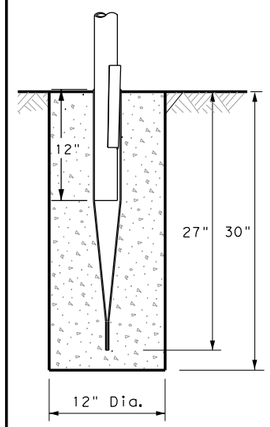

STEEL

WAP

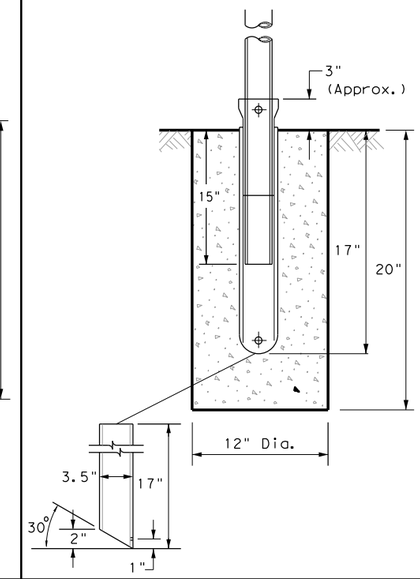

PLASTIC

NOTE

1. Install per manufacturer's recommendations.

TYPE OF BARRIER MOUNTS

GUARD FENCE ATTACHMENT

GF1

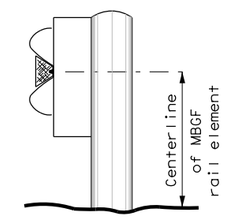

GF2

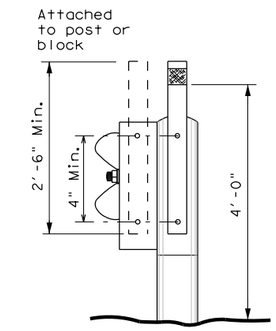

CONCRETE BARRIER / BRIDGE RAIL

CTB

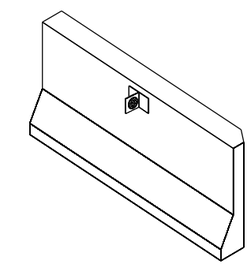

GENERAL NOTES

1. Place delineators on a section of roadway at a consistent distance from the edge of pavement.
2. Where a restriction prevents consistent placement from the pavement edge, place the affected object markers in line with the innermost edge of the obstruction.
3. When Type 2 object markers and delineators are more than 8'-0" from the edge of the pavement, it may not be possible to maintain a height of approximately 4'-0". If this is the case, place the object marker or delineator as close to the desired height as possible.
4. Install all delineators, object markers and barrier reflectors in accordance with the manufacturer's recommendation.
5. Barrier reflectors should be installed a minimum of 18 inches above the edge of the pavement surface.

TYPES 1, 3, AND 4 OBJECT MARKERS AND CHEVRONS

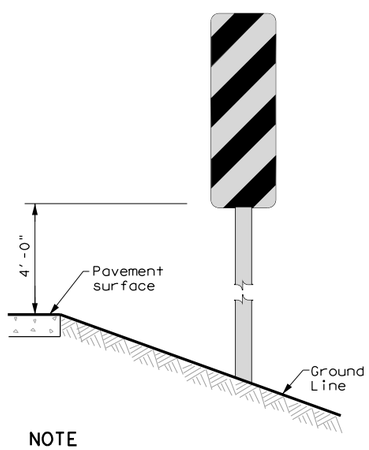

NOTE

Mounting at 4 feet to the bottom of the chevron is permitted for chevrons that will not exceed a height of 6'-6" to the top of the chevron (sizes 24" x 30" and smaller)

CHEVRONS AND ONE DIRECTION LARGE ARROW SIGN

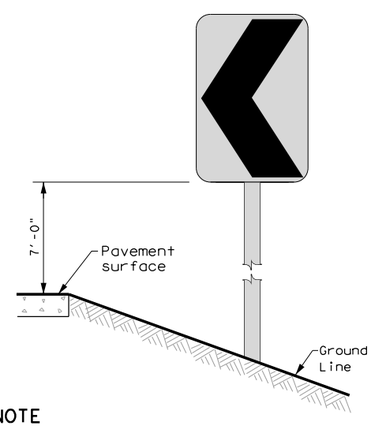

NOTE

Chevrons 30" x 36" and larger shall be mounted at a height of 7' to the bottom of the chevron. Chevron sign and ONE DIRECTIONAL LARGE ARROW sign (W1-9T) shall be installed per SMD standard sheets and paid under item 644.

DELINEATORS AND TYPE 2 OBJECT MARKERS

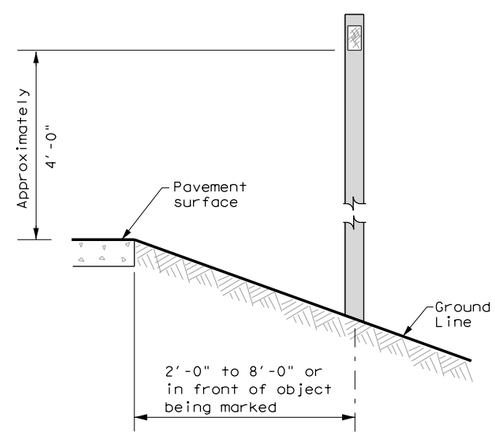

See general notes 1, 2 and 3.

Texas Department of Transportation

Traffic Operations Division Standard

DELINEATOR & OBJECT MARKER INSTALLATION

D & OM(2)-15

FILE: dom2-15.dgn	DN: TXDOT	CK: TXDOT	DW: TXDOT	CK: TXDOT
© TxDOT August 2004	CONT	SECT	JOB	HIGHWAY
REVISIONS				
10-09 3-15	DIST		COUNTY	SHEET NO.
4-10				488

20B

DISCLAIMER:
The use of this standard is governed by the "Texas Engineering Practice Act". No warranty of any kind is made by TxDOT for any purpose whatsoever. TxDOT assumes no responsibility for the conversion of this standard to other formats or for incorrect results or damages resulting from its use.

DATE:
FILE:

DISCLAIMER: The use of this standard is governed by the "Texas Engineering Practice Act". No warranty of any kind is made by TxDOT for any purpose whatsoever. TxDOT assumes no responsibility for the conversion of this standard to other formats or for incorrect results or damages resulting from its use.

SIGN SUPPORT DESCRIPTIVE CODES

(Descriptive Codes correspond to project estimate and quantities sheets)

SM RD SGN ASSM TY XXXXX(X)XX(X-XXXX)

Post Type

FRP = Fiberglass Reinforced Plastic Pipe (see SMD(FRP))
TWT = Thin-Walled Tubing (see SMD(TWT))
10BWG = 10 BWG Tubing (see SMD(SLIP-1) to (SLIP-3))
S80 = Schedule 80 Pipe (see SMD(SLIP-1) to (SLIP-3))

Number of Posts (1 or 2)

Anchor Type

UA = Universal Anchor - Concreted (see SMD(FRP) and (TWT))
UB = Universal Anchor - Bolted down (see SMD(FRP) and (TWT))
WS = Wedge Anchor Steel - (see SMD(TWT))
WP = Wedge Anchor Plastic (see SMD(TWT))
SA = Slipbase - Concreted (see SMD(SLIP-1) to (SLIP-3))
SB = Slipbase - Bolted Down (see SMD(SLIP-1) to (SLIP-3))

Sign Mounting Designation

P = Prefab. "Plain" (see SMD(SLIP-1) to (SLIP-3), (TWT), (FRP))
T = Prefab. "T" (see SMD(SLIP-1) to (SLIP-3), (TWT))
U = Prefab. "U" (see SMD(SLIP-1) to (SLIP-3))
IF REQUIRED
1EXT or 2EXT = Number of Extensions (see SMD(SLIP-1) to (SLIP-3), (TWT))
BM = Extruded Wind Beam (see SMD(SLIP-1) to (SLIP-3))
WC = 1.12 #/ft Wing Channel (see SMD(SLIP-1) to (SLIP-3))
EXAL = Extruded Aluminum Sign Panels (see SMD(SLIP-3))

REQUIRED CLEARANCE FOR BREAKAWAY SUPPORT

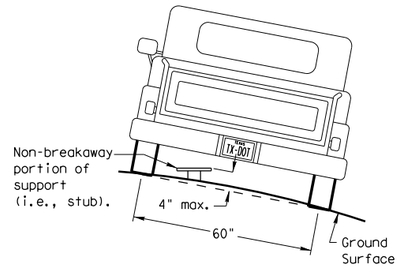

To avoid vehicle undercarriage snagging, any substantial remains of a breakaway support, when it is broken away, should not project more than 4 inches above a 60-inch chord (i.e., typical space between wheel paths).

SIGN LOCATION

PAVED SHOULDERS

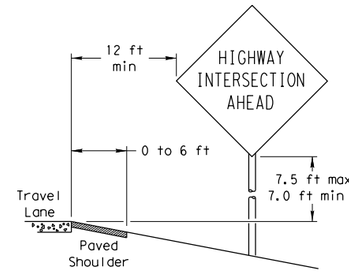

LESS THAN 6 FT. WIDE

When the shoulder is 6 ft. or less in width, the sign must be placed at least 12 ft. from the edge of the travel lane.

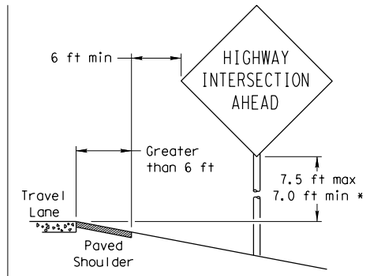

GREATER THAN 6 FT. WIDE

When the shoulder is greater than 6 ft in width, the sign must be placed at least 6 ft. from the edge of the shoulder.

T-INTERSECTION

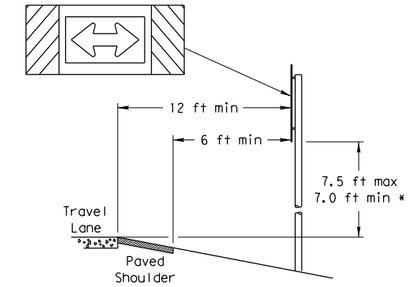

When this sign is needed at the end of a two-lane, two way roadway, the right edge of the sign should be in line with the centerline of the roadway. Place as close to ROW as practical.

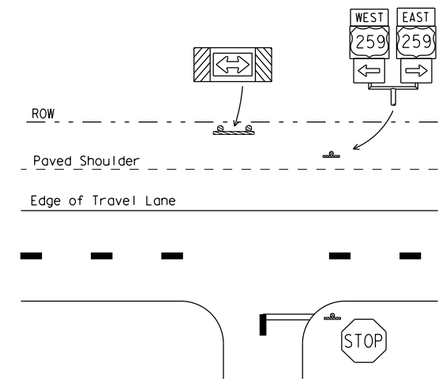

BEHIND BARRIER

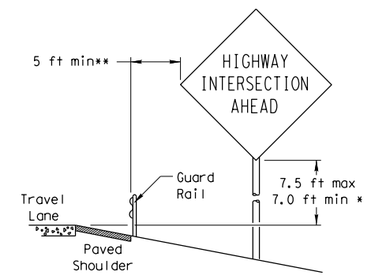

BEHIND GUARDRAIL

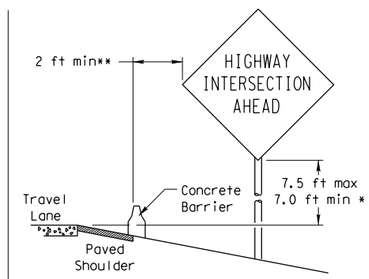

BEHIND CONCRETE BARRIER

**Sign clearance based on distance required for proper guard rail or concrete barrier performance.

* Signs shall be mounted using the following condition that results in the greatest sign elevation:

(1) a minimum of 7 to a maximum of 7.5 feet above the edge of the travel lane or

(2) a minimum of 7 to a maximum of 7.5 feet above the grade at the base of the support when sign is installed on the backslope.

The maximum values may be increased when directed by the Engineer.

See the Traffic Operations Division website for detailed drawings of sign clamps, Triangular Slipbase System components and Wedge Anchor System components.

The website address is:
http://www.txdot.gov/publications/traffic.htm

No more than 2 sign posts should be located within a 7 ft. circle.

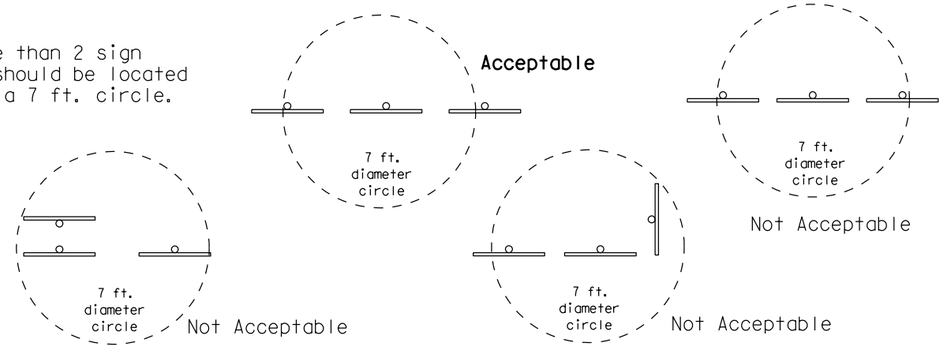

TYPICAL SIGN ATTACHMENT DETAIL

Single Signs

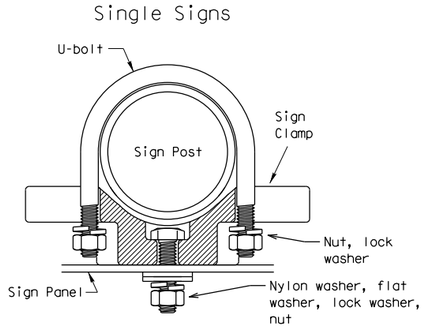

Bolts used to mount sign panels to the clamp are 5/16-18 UNC galvanized square head with nut, nylon washer, flat washer and lock washer. The bolt length is 1 inch for aluminum.

When two sign clamps are used to mount signs back-to-back, use a 5/16-18 UNC galvanized hex head per ASTM A307 with nut and helical-spring lock washer. The approximate bolt lengths for various post sizes and sign clamp types are given in the table at right. The bolt length may need to be adjusted depending upon field conditions.

Sign clamps may be either the specific size clamp or the universal clamp.

Back-to-Back Signs

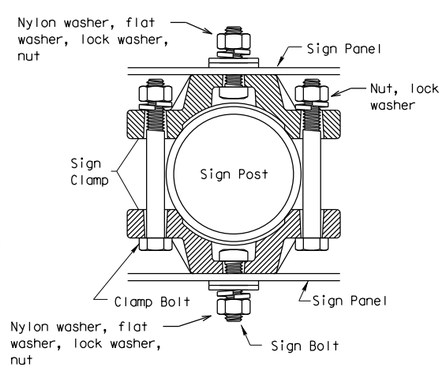

Pipe Diameter	Approximate Bolt Length	
	Specific Clamp	Universal Clamp
2" nominal	3"	3 or 3 1/2"
2 1/2" nominal	3 or 3 1/2"	3 1/2 or 4"
3" nominal	3 1/2 or 4"	4 1/2"

SIGNS WITH PLAQUES

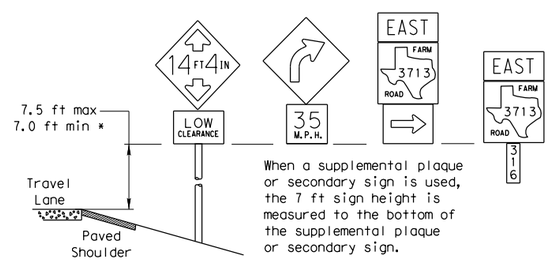

When a supplemental plaque or secondary sign is used, the 7 ft sign height is measured to the bottom of the supplemental plaque or secondary sign.

CURB & GUTTER OR RAISED ISLAND

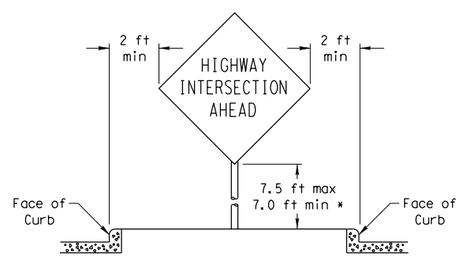

RESTRICTED RIGHT-OF-WAY

(When 6 ft min. is not possible.)

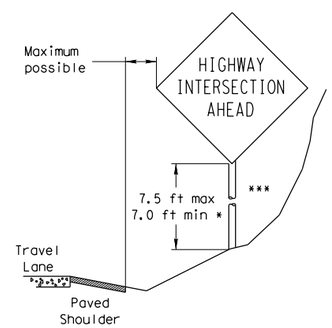

Right-of-way restrictions may be created by rocks, water, vegetation, forest, buildings, a narrow island, or other factors.

In situations where a lateral restriction prevents the minimum horizontal clearance from the edge of the travel lane, signs should be placed as far from the travel lane as practical.

*** Post may be shorter if protected by guardrail or if Engineer determines the post could not be hit due to extreme slope.

Texas Department of Transportation
Traffic Operations Division

SIGN MOUNTING DETAILS SMALL ROADSIDE SIGNS GENERAL NOTES & DETAILS

SMD(GEN)-08

©TxDOT July 2002

9-08 REVISIONS	DN: TXDOT	CK: TXDOT	DW: TXDOT	CK: TXDOT
	CONT	SECT	JOB	HIGHWAY
	DIST	COUNTY		SHEET NO. 489

DATE:
FILE:

DISCLAIMER: The use of this standard is governed by the "Texas Engineering Practice Act". No warranty of any kind is made by TxDOT for any purpose whatsoever. TxDOT assumes no responsibility for the conversion of this standard to other formats or for incorrect results or damages resulting from its use.

TRIANGULAR SLIPBASE INSTALLATION GENERAL REQUIREMENTS

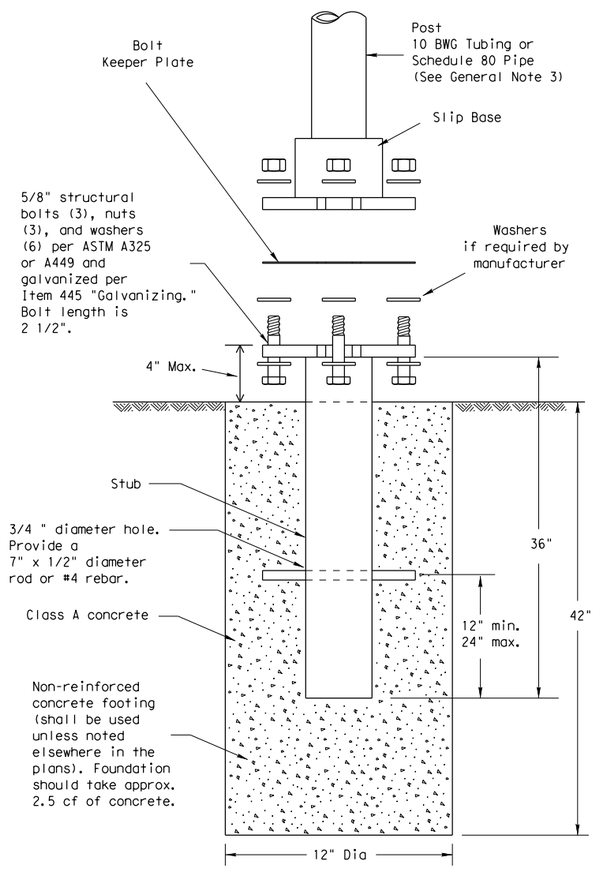

SM RD SGN ASSM TY XXXXX(X)SA(X-XXXX)

NOTE

There are various devices approved for the Triangular Slipbase System. Please reference the Material Producer List for approved slip base systems. http://www.txdot.gov/business/producer_list.htm The devices shall be installed per manufacturers' recommendations. Installation procedures shall be provided to the Engineer by Contractor.

GENERAL NOTES:

1. Slip base shall be permanently marked to indicate manufacturer. Method, design, and location of marking are subject to approval of the TxDOT Traffic Standards Engineer.
2. Material used as post with this system shall conform to the following specifications:
   10 BWG Tubing (2.875" outside diameter)
   - 0.134" nominal wall thickness
   - Seamless or electric-resistance welded steel tubing or pipe
   - Steel shall be HSLAS Gr 55 per ASTM A1011 or ASTM A1008
   - Other steels may be used if they meet the following:
     - 55,000 PSI minimum yield strength
     - 70,000 PSI minimum tensile strength
     - 20% minimum elongation in 2"
   - Wall thickness (uncoated) shall be within the range of 0.122" to 0.138"
   - Outside diameter (uncoated) shall be within the range of 2.867" to 2.883"
   - Galvanization per ASTM A123 or ASTM A653 G210. For precoated steel tubing (ASTM A653), recoat tube outside diameter weld seam by metallizing with zinc wire per ASTM B833.

   Schedule 80 Pipe (2.875" outside diameter)
   - 0.276" nominal wall thickness
   - Steel tubing per ASTM A500 Gr C
   - Other seamless or electric-resistance welded steel tubing or pipe with equivalent outside diameter and wall thickness may be used if they meet the following:
     - 46,000 PSI minimum yield strength
     - 62,000 PSI minimum tensile strength
     - 21% minimum elongation in 2"
   - Wall thickness (uncoated) shall be within the range of 0.248" to 0.304"
   - Outside diameter (uncoated) shall be within the range of 2.855" to 2.895"
   - Galvanization per ASTM A123
3. See the Traffic Operations Division website for detailed drawings of sign clamps and Texas Universal Triangular Slipbase System components. The website address is:
   http://www.txdot.gov/publications/traffic.htm
4. Sign supports shall not be spliced except where shown. Sign support posts shall not be spliced.

ASSEMBLY PROCEDURE

Foundation

1. Prepare 12-inch diameter by 42-inch deep hole. If solid rock is encountered, the depth of the foundation may be reduced such that it is embedded a minimum of 18 inches into the solid rock.
2. The Engineer may permit batches of concrete less than 2 cubic yards to be mixed with a portable, motor-driven concrete mixer. For small placements less than 0.5 cubic yards, hand mixing in a suitable container may be allowed by Engineer. Concrete shall be Class A.
3. Push the pipe end of the slip base stub into the center of the concrete. Rotate the stub back and forth while pushing it down into the concrete to assure good contact between the concrete and stub. Continue to work the stub into the concrete until it is between 2 to 4 inches above the ground.
4. Plumb the stub. Allow a minimum of 4 days to set, unless otherwise directed by the Engineer.
5. The triangular slipbase system is multidirectional and is designed to release when struck from any direction.

Support

1. Cut support so that the bottom of the sign will be 7 to 7.5 feet above the edge of the travelway (i.e., edge of the closest lane) when slip plate is below the edge of pavement or 7 to 7.5 feet above slip plate when the slip plate is above the edge of the travelway. The cut shall be plumb and straight.
2. Attach sign to support using connections shown. When multiple signs are installed on the same support, ensure the minimum clearance between each sign is maintained. See SMD(SLIP-2) for clearances based on sign types.

CONCRETE ANCHOR

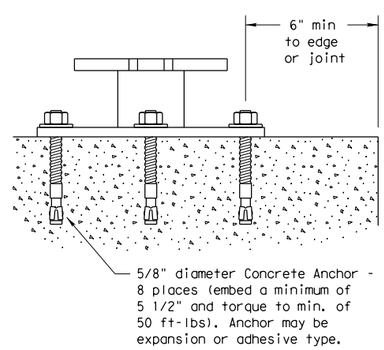

SM RD SGN ASSM TY XXXXX(X)SB(X-XXXX)

Concrete anchor consists of 5/8" diameter stud bolt with UNC series bolt threads on the upper end. Heavy hex nut per ASTM A563, and hardened washer per ASTM F436. The stud bolt shall have a minimum yield and ultimate tensile strength of 50 and 75 KSI, respectively. Nuts, bolts and washers shall be galvanized per Item 445, "Galvanizing." Adhesive type anchors shall have stud bolts installed with Type III epoxy per DMS-6100, "Epoxies and Adhesives." Adhesive anchors may be loaded after adequate epoxy cure time per the manufacturer's recommendations. Top of bolt shall extend at least flush with top of the nut when installed. The anchor, when installed in 4000 psi normal-weight concrete with a 5 1/2" minimum embedment, shall have a minimum allowable tension and shear of 3900 and 3100 psi, respectively.

Texas Department of Transportation
Traffic Operations Division

SIGN MOUNTING DETAILS
SMALL ROADSIDE SIGNS
TRIANGULAR SLIPBASE SYSTEM

SMD(SLIP-1)-08

©TxDOT July 2002	DN: TXDOT	CK: TXDOT	DW: TXDOT	CK: TXDOT
9-08 REVISIONS	CONT	SECT	JOB	HIGHWAY
	DIST	COUNTY		SHEET NO.
				490

DATE:
FILE:

DISCLAIMER: The use of this standard is governed by the "Texas Engineering Practice Act". No warranty of any kind is made by TxDOT for any purpose whatsoever. TxDOT assumes no responsibility for the conversion of this standard to other formats or for incorrect results or damages resulting from its use.

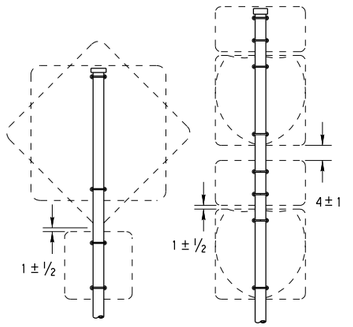

SM RD SGN ASSM TY XXXXX(1)XX(P)

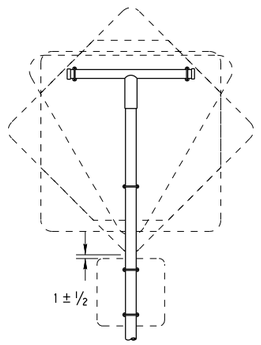

SM RD SGN ASSM TY XXXXX(1)XX(T)

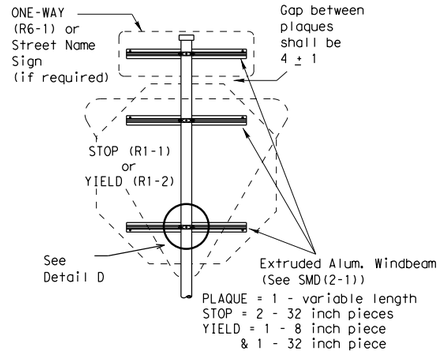

SM RD SGN ASSM TY XXXXX(1)XX(P-BM)

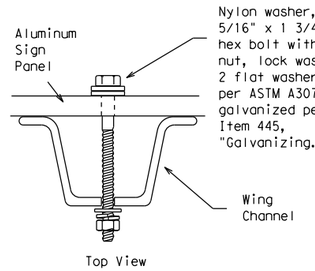

Detail A

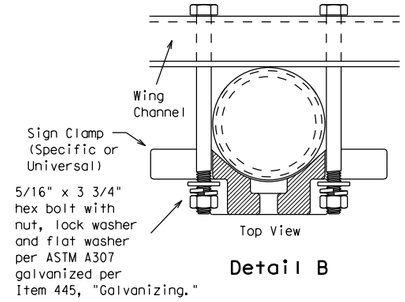

Detail B

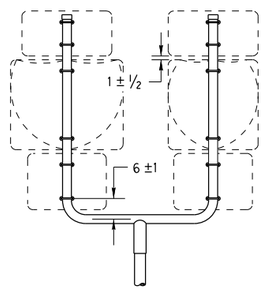

SM RD SGN ASSM TY XXXXX(1)XX(U)

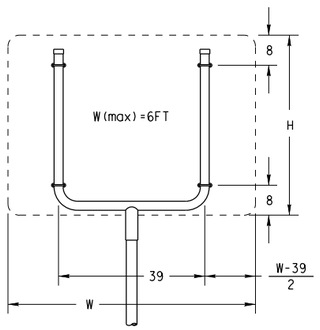

SM RD SGN ASSM TY XXXXX(1)XX(U)

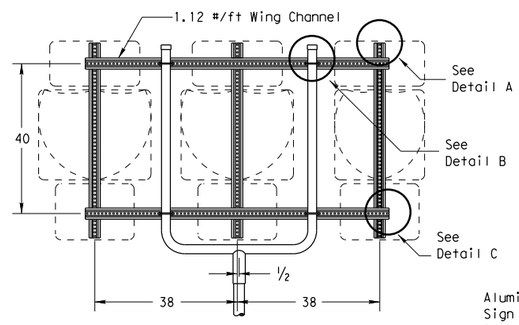

SM RD SGN ASSM TY XXXXX(1)XX(U-WC)
(See Note 11)

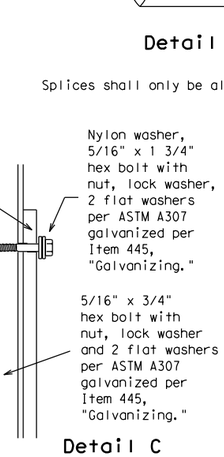

Detail C

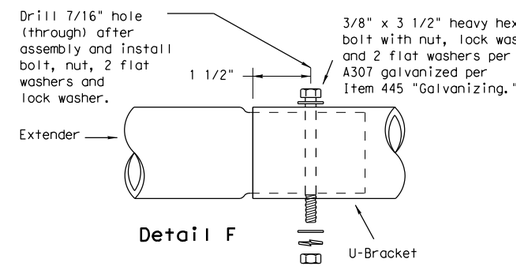

Detail F

Splices shall only be allowed behind the sign substrate.

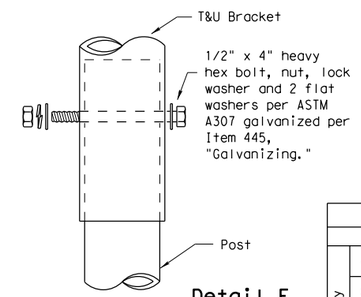

Detail E

GENERAL NOTES:

1.

SIGN SUPPORT	# OF POSTS	MAX. SIGN AREA
10 BWG	1	16 SF
10 BWG	2	32 SF
Sch 80	1	32 SF
Sch 80	2	64 SF

2. The Engineer may require that a Schedule 80 post be used in place of a 10 BWG where a sign height is abnormally high due to a fill slope.
3. Sign supports shall not be spliced except where shown. Sign support posts shall not be spliced.
4. Aluminum sign blanks shall conform to Departmental Material Specifications DMS-7110 and shall have the following minimum thicknesses: 0.080 for signs less than 7.5 sq. ft., 0.100 for signs 7.5 to 15 sq. ft., and 0.125 for signs greater than 15 sq. ft.
5. Signs that require specific supports due to reasons in addition to windloading are indicated on the "REQUIRED SUPPORT" table on this sheet.
6. For horizontal rectangular signs fabricated from flat aluminum, T-brackets are used for signs 24 inches or less in height. U-brackets are used for signs of greater height.
7. When two triangular slipbase supports are used to support a single sign, they shall not be "rigidly" connected to each other except through the sign panel. This will allow each support to act independently when impacted by an errant vehicle.
8. Wing channel shall meet ASTM A 1011 SS Gr 50 and be galvanized per ASTM A 123.
9. Excess pipe, wing channel, or windbeam shall be cut off so that it does not extend beyond the sign panel (i.e., excess support shall not be visible when the sign is viewed from the front.) Repair galvanized coating at cut support ends per Item 445, "Galvanizing."
10. Additional route markers may be added vertically, provided the total sign area does not exceed the maximum allowable amount per Note 1.
11. Additional sign clamp required on the "T-bracket" post for 24 inch height signs. Place the clamp 3 inches above bottom of sign when possible.
12. Post open ends shall be fitted with Friction Caps.
13. Sign blanks shall be the sizes and shapes shown on the plans.

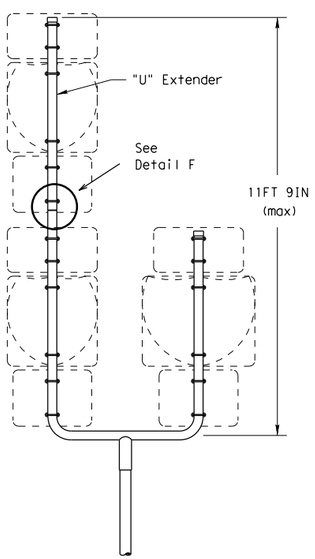

SM RD SGN ASSM TY S80(1)XX(U-1EXT)

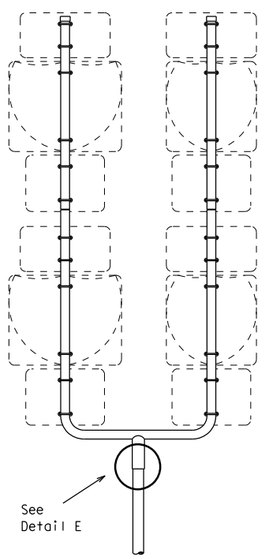

SM RD SGN ASSM TY S80(1)XX(U-2EXT)

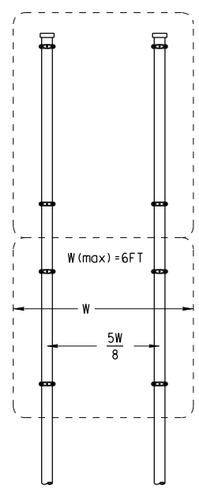

SM RD SGN ASSYM TY XXXXX(2)XX(P)

SIDE VIEW

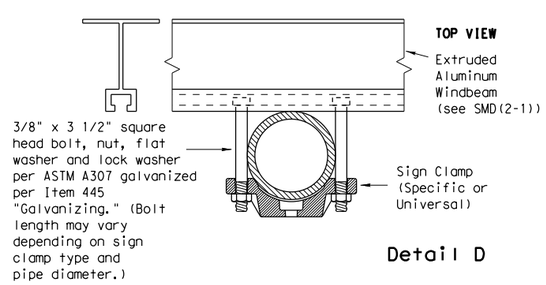

Detail D

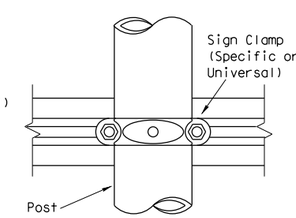

REQUIRED SUPPORT		
	SIGN DESCRIPTION	SUPPORT
Regulatory	48-inch STOP sign (R1-1)	TY 10BWG(1)XX(T) TY 10BWG(1)XX(P-BM)
Regulatory	60-inch YIELD sign (R1-2)	TY 10BWG(1)XX(T) TY 10BWG(1)XX(P-BM)
Regulatory	48x16-inch ONE-WAY sign (R6-1)	TY 10BWG(1)XX(T) TY 10BWG(1)XX(P-BM)
Regulatory	36x48, 48x36, and 48x48-inch signs	TY 10BWG(1)XX(T)
Regulatory	48x60-inch signs	TY S80(1)XX(T)
Warning	48x48-inch signs (diamond or square)	TY 10BWG(1)XX(T)
Warning	48x60-inch signs	TY S80(1)XX(T)
Warning	48-inch Advance School X-ing sign (S1-1)	TY 10BWG(1)XX(T)
Warning	48-inch School X-ing sign (S2-1)	TY 10BWG(1)XX(T)
Warning	Large Arrow sign (W1-6 & W1-7)	TY 10BWG(1)XX(T)

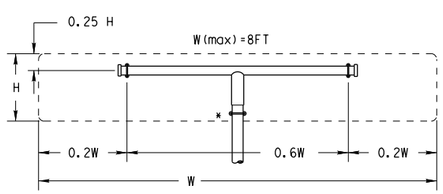

All dimensions are in english unless detailed otherwise.

SM RD SGN ASSM TY XXXXX(1)XX(T)
(* - See Note 12)

FRICTION CAP DETAIL

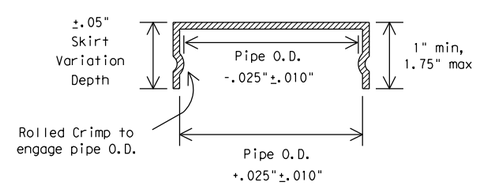

Friction caps may be manufactured from hot rolled or cold rolled steel sheets. The minimum sheet metal thickness shall be 24 gauge for all cap sizes.

The rim edges shall be reasonably straight and smooth. Caps shall be sized and formed in such a manner as to produce a drive-on friction fit and have no tendency to rock when seated on the pipe. The depth shall be sufficient to give positive protection against entrance of rainwater. They shall be free of sharp creases or indentations and show no evidence of metal fracture.

Caps shall have an electrodeposited coating of zinc in accordance with the requirements of ASTM B633 Class FE/ZN 8.

Texas Department of Transportation
Traffic Operations Division

SIGN MOUNTING DETAILS SMALL ROADSIDE SIGNS TRIANGULAR SLIPBASE SYSTEM

SMD(SLIP-2)-08

©TxDOT July 2002

DN: TXDOT	CK: TXDOT	DW: TXDOT	CK: TXDOT
CONT	SECT	JOB	HIGHWAY
DIST	COUNTY		SHEET NO.
			491

9-08 REVISIONS

26C

DATE:
FILE:

DISCLAIMER: The use of this standard is governed by the "Texas Engineering Practice Act". No warranty of any kind is made by TxDOT for any purpose whatsoever. TxDOT assumes no responsibility for the conversion of this standard to other formats or for incorrect results or damages resulting from its use.

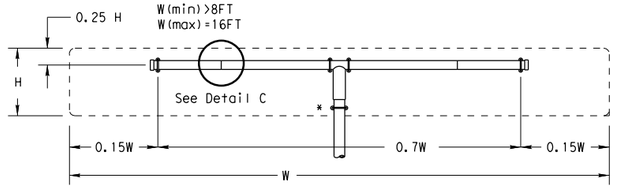

SM RD SGN ASSM TY XXXXX(1)XX(T-2EXT)

(* - See Note 12)

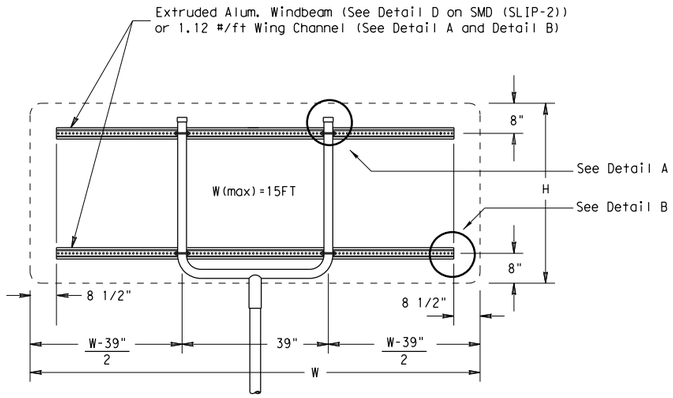

SM RD SGN ASSM TY XXXXX(1)XX(U-XX)

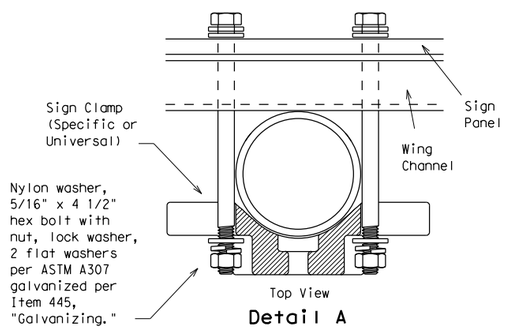

Detail A

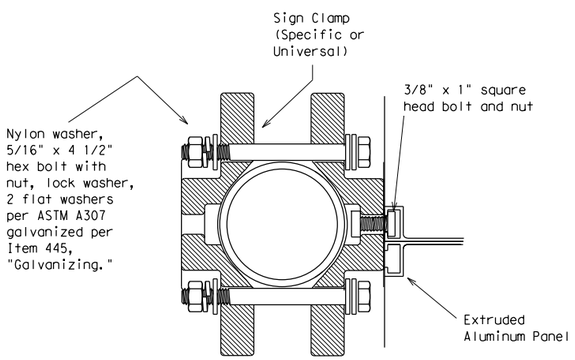

Detail D

EXTRUDED ALUMINUM SIGN WITH T BRACKET

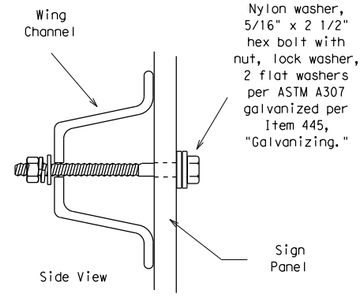

Detail B

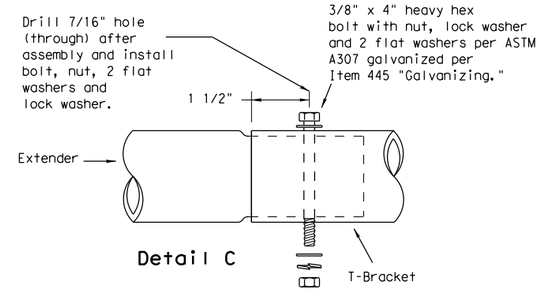

Detail C

Splices shall only be allowed behind the sign substrate.

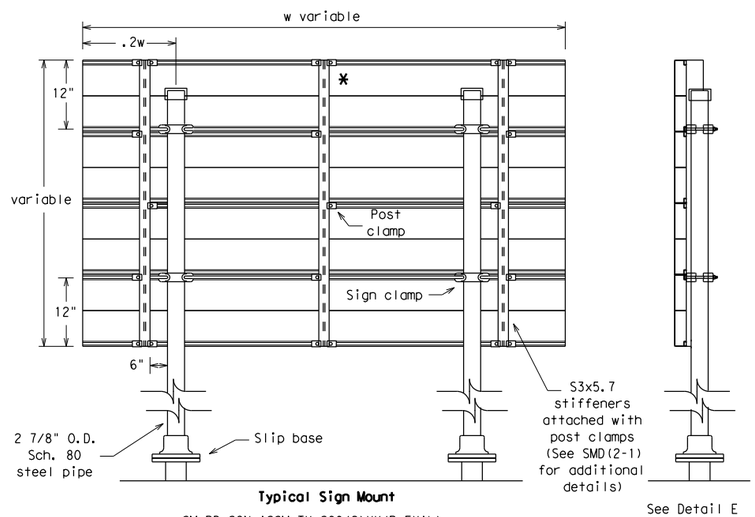

Typical Sign Mount

SM RD SGN ASSM TY S80(2)XX(P-EXAL)

* Additional stiffener placed at approximate center of signs when sign width is greater than 10'.

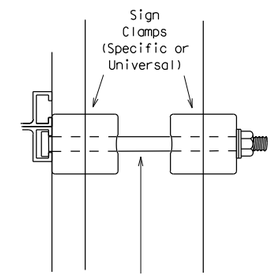

3/8" x 4 1/2"
square head
bolt, nut,
flat washer
and lock washer per
ASTM A307 galvanized
per Item 445,
"Galvanizing."

Detail E

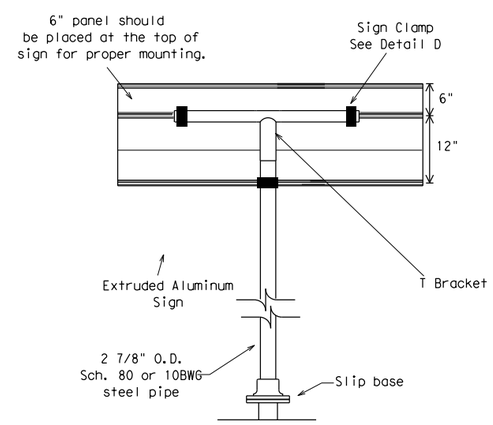

Extruded Aluminum Sign
With T Bracket

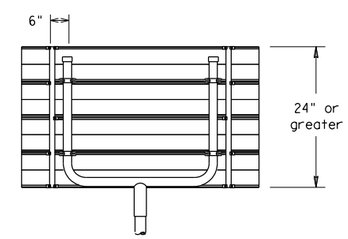

Use Extruded Alum. Windbeam as stiffeners
See SMD (2-1) for additional details

See Detail E
for clamp installation

GENERAL NOTES:

1.

SIGN SUPPORT	# OF POSTS	MAX. SIGN AREA
10 BWG	1	16 SF
10 BWG	2	32 SF
Sch 80	1	32 SF
Sch 80	2	64 SF

2. The Engineer may require that a Schedule 80 post be used in place of a 10 BWG where a sign height is abnormally high due to a fill slope.
3. Sign supports shall not be spliced except where shown. Sign support posts shall not be spliced.
4. Aluminum sign blanks shall conform to Departmental Material Specifications DMS-7110 and shall have the following minimum thicknesses: 0.080 for signs less than 7.5 sq. ft., 0.100 for signs 7.5 to 15 sq. ft., and 0.125 for signs greater than 15 sq. ft.
5. Signs that require specific supports due to reasons in addition to windloading are indicated on the "REQUIRED SUPPORT" table on this sheet.
6. For horizontal rectangular signs fabricated from flat aluminum, T-brackets are used for signs 24 inches or less in height. U-brackets are used for signs of greater height.
7. When two triangular slipbase supports are used to support a single sign, they shall not be "rigidly" connected to each other except through the sign panel. This will allow each support to act independently when impacted by an errant vehicle.
8. Wing channel shall meet ASTM A 1011 SS Gr 50 and be galvanized per ASTM A 123.
9. Excess pipe, wing channel, or windbeam shall be cut off so that it does not extend beyond the sign panel (i.e., excess support shall not be visible when the sign is viewed from the front.) Repair galvanized coating at cut support ends per Item 445, "Galvanizing."
10. Sign blanks shall be the sizes and shapes shown on the plans.
11. Additional sign clamp required on the "T-bracket" post for 24 inch high signs. Place the clamp 3 inches above bottom of sign when possible.
12. Post open ends shall be fitted with Friction Caps.

REQUIRED SUPPORT

	SIGN DESCRIPTION	SUPPORT
Regulatory	48-inch STOP sign (R1-1)	TY 10BWG(1)XX(T) TY 10BWG(1)XX(P-BM)
Regulatory	60-inch YIELD sign (R1-2)	TY 10BWG(1)XX(T) TY 10BWG(1)XX(P-BM)
Regulatory	48x16-inch ONE-WAY sign (R6-1)	TY 10BWG(1)XX(T) TY 10BWG(1)XX(P-BM)
Regulatory	36x48, 48x36, and 48x48-inch signs	TY 10BWG(1)XX(T)
Regulatory	48x60-inch signs	TY S80(1)XX(T)
Warning	48x48-inch signs (diamond or square)	TY 10BWG(1)XX(T)
Warning	48x60-inch signs	TY S80(1)XX(T)
Warning	48-inch Advance School X-ing sign (S1-1)	TY 10BWG(1)XX(T)
Warning	48-inch School X-ing sign (S2-1)	TY 10BWG(1)XX(T)
Warning	Large Arrow sign (W1-6 & W1-7)	TY 10BWG(1)XX(T)

Texas Department of Transportation
Traffic Operations Division

SIGN MOUNTING DETAILS SMALL ROADSIDE SIGNS TRIANGULAR SLIPBASE SYSTEM

SMD(SLIP-3)-08

© TxDOT July 2002

DN: TXDOT	CK: TXDOT	DW: TXDOT	CK: TXDOT
CONT	SECT	JOB	HIGHWAY
DIST		COUNTY	SHEET NO.
			492

9-08 REVISIONS

DATE:
FILE:

DISCLAIMER: The use of this standard is governed by the "Texas Engineering Practice Act". No warranty of any kind is made by TxDOT for any purpose whatsoever. TxDOT assumes no responsibility for the conversion of this standard to other formats or for incorrect results or damages resulting from its use.

Universal Anchor System with Thin-Walled Tubing Post

Wedge Anchor Steel System

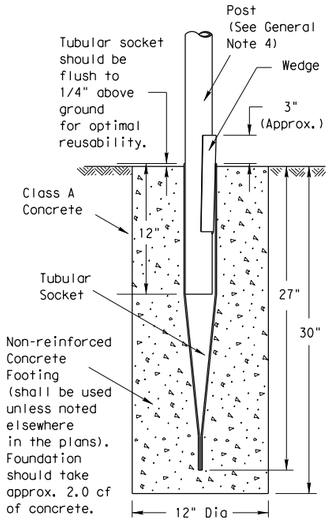

SM RD SGN ASSM TY TWT(X)WS(X)

Wedge Anchor High Density Polyethylene (HDPE) System

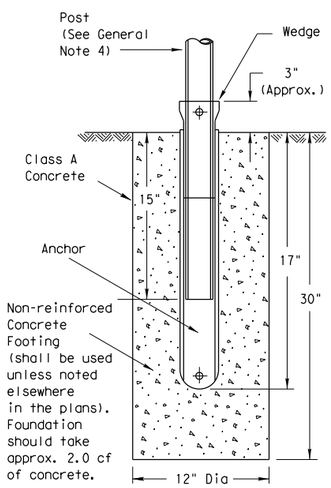

SMD RD SGN ASSM TY TWT(X)WP(X)

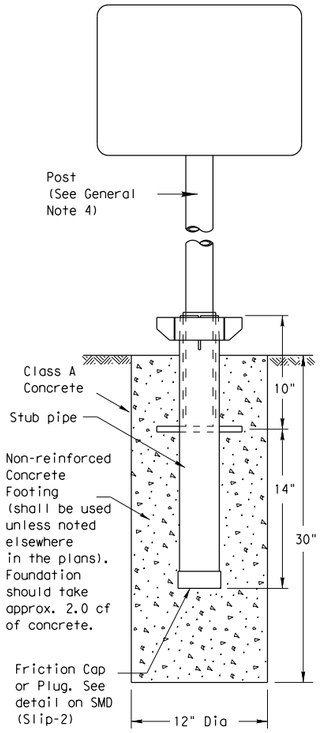

SM RD SGN ASSM TY TWT(X)UA(P)

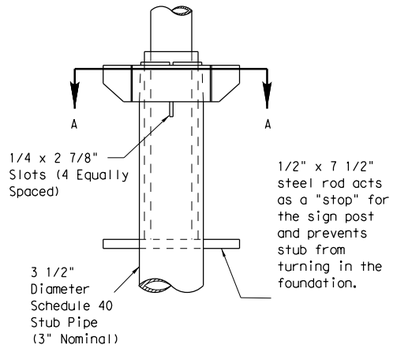

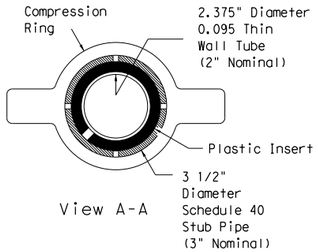

View A-A

Plastic insert must be used when using the TWT with either the Universal Anchor System or the Bolt Down Universal Anchor System. The insert should be approx. 10" long and cover the tubing from just above the top of the stub pipe to the bottom of the sign post when using the Universal Anchor System. The insert should be cut to approx. 4 1/2" when used with the Bolt Down Universal Anchor System.

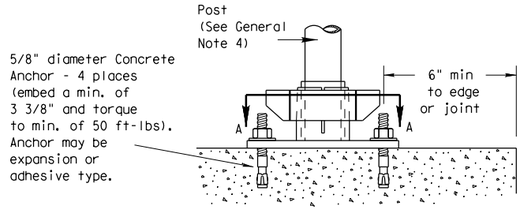

Concrete anchor consists of 5/8" diameter stud bolt with UNC series bolt threads on the upper end. A heavy hex nut per ASTM A563 and hardened washer per ASTM F436. The stud bolt shall have minimum yield and ultimate tensile strengths of 50 and 75 ksi, respectively. Nuts, bolts and washers shall be galvanized per Item 445, "Galvanizing." Top of bolt shall extend at least flush with top of nut when installed. The anchor, when installed in 4000 psi normal-weight concrete with a 3 3/8" minimum embedment, shall have a minimum allowable tension and shear of 2450 and 1525 psi, respectively. Adhesive type anchors shall have stud bolts installed with Type III epoxy per DMS-6100, "Epoxies and Adhesives." Adhesive anchors may be loaded after adequate epoxy cure time per the manufacturer's recommendations.

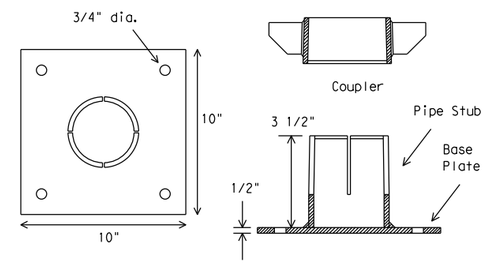

SM RD SGN ASSM TY TWT(X)UB(P)

Sign Installation Using a Prefabricated T-Bracket for Thin-Wall Tubing Post

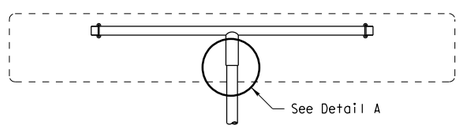

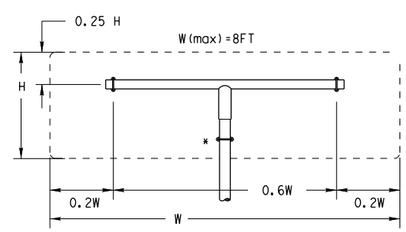

SM RD SGN ASSM TY TWT(X)XX(T)

(* - See General Note 6)

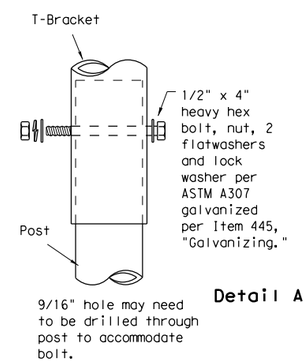

Detail A

NOTE

The devices shall be installed per manufacturer's recommendations.
Installation procedures shall be provided to the Engineer by Contractor.

GENERAL NOTES:

1. The Wedge Anchor System and the Universal Anchor System with thin wall tubing post may be used to support up to 10 square feet of sign area.
2. The tubular socket, wedge and prefabricated T-bracket shall be permanently marked to indicate manufacturer. Method, design, and location of marking are subject to the approval of the TxDOT Traffic Standards Engineer.
3. Except for posts (13 BWG Tubing), clamps, nuts and bolts, all components shall be prequalified. A list of prequalified vendors may be obtained from the Material Producer List web page. The website address is: http://www.txdot.gov/business/producer list.htm
4. Material used as post with this system shall conform to the following specifications:
   13 BWG Tubing (2.375" outside diameter) (TWT)
   - 0.095" nominal wall thickness
   - Seamless or electric-resistance welded steel tubing
   - Steel shall be HSLAS Gr 55 per ASTM A1011 or ASTM A1008
   - Other steels may be used if they meet the following:
     - 55,000 PSI minimum yield strength
     - 70,000 PSI minimum tensile strength
     - 18% minimum elongation in 2"
   - Wall thickness (uncoated) shall be within the range of .083" to .099"
   - Outside diameter (uncoated) shall be within the range of 2.369" to 2.381"
   - Galvanization per ASTM 123 or ASTM A653 G210. For precoated steel tubing (ASTM A653), recoat tube outside diameter weld seam by metallizing with zinc wire per ASTM B833.
5. Sign blanks shall be the sizes and shapes shown on the plans.
6. Additional sign clamp required on the "T-bracket" post for 24" high signs. Place clamp at least 3" above bottom of sign when possible.
7. Sign supports shall not be spliced except where shown. Sign support posts shall not be spliced.
8. See the Traffic Operations Division website for detailed drawings of sign clamps and Wedge Anchor System components. The website address is: http://www.txdot.gov/publications/traffic.htm

WEDGE ANCHOR SYSTEM INSTALLATION PROCEDURE

1. Dig foundation hole. Where solid rock is encountered at ground level, the foundation shall be a minimum depth of 18". When solid rock is encountered below ground level, the foundation shall extend in the solid rock a minimum depth of 18" or provide a minimum foundation depth of 30". If solid rock is encountered, the socket/stub may be reduced in length as required to a minimum length of 18". Any material removed from the socket/stub shall be from the bottom and the clearance requirements given on SMD(GEN) must be followed. The inner surfaces of the socket/stub must remain free of concrete or other debris.
2. The Engineer may permit batches of concrete less than 2 cubic yards to be mixed with a portable, motor driven concrete mixer. For small placements less than 0.5 cubic yards, hand mixing in a suitable container may be allowed by Engineer. Place concrete into hole until it is approximately flush with the ground. Concrete shall be Class A.
3. Insert tubular socket into concrete until top of socket is approximately 1/4 " above the concrete footing.
4. Plumb the socket. Allow a minimum 4 days for concrete to set, unless otherwise directed by Engineer..
5. Attach the sign to the sign post.
6. Insert the sign post into socket and align sign face with roadway.
7. Drive the wedge into the socket to secure post. This will leave approximately 3 inches of the wedge exposed.

UNIVERSAL ANCHOR SYSTEM INSTALLATION PROCEDURE

1. Dig foundation hole. Where solid rock is encountered at ground level, the foundation shall be a minimum depth of 18". When solid rock is encountered below ground level, the foundation shall extend in the solid rock a minimum depth of 18" or provide a minimum foundation depth of 30". If solid rock is encountered, the socket/stub may be reduced in length as required to a minimum length of 18". Any material removed from the socket/stub shall be from the bottom and the clearance requirements given on SMD(GEN) must be followed. The inner surfaces of the socket/stub must remain free of concrete or other debris.
2. Insert base post in hole to depths shown and backfill hole with concrete.
3. Level and plumb the base post using a torpedo level and allow concrete adequate time to set. The bottom of the slots provided in the stub pipe shall remain above the top of the concrete foundation.
4. Attach the sign to the sign post.
5. Install plastic insert around bottom of post.
6. Insert sign post into base post. Lower until the post comes to rest on steel rod.
7. Seat compression ring using a hammer. Typically, the top of compression ring will be approximately level with top of stub post when optimally installed.
8. Check sign post by hand to ensure it is unable to turn. If loose, increase the tightening of the compression ring.

Texas Department of Transportation
Traffic Operations Division

SIGN MOUNTING DETAILS SMALL ROADSIDE SIGNS WEDGE & UNIVERSAL ANCHOR WITH THIN WALL TUBING POST

SMD(TWT)-08

©TxDOT July 2002	DN: TXDOT	CK: TXDOT	DW: TXDOT	CK: TXDOT
9-08 REVISIONS	CONT	SECT	JOB	HIGHWAY
	DIST	COUNTY		SHEET NO.
				493

26E

DATE:
FILE:

DISCLAIMER
The use of this standard is governed by the "Texas Engineering Practice Act". No warranty of any kind is made by TxDOT for any purpose whatsoever. TxDOT assumes no responsibility for the conversion of this standard to other formats or for incorrect results or damages resulting from its use.

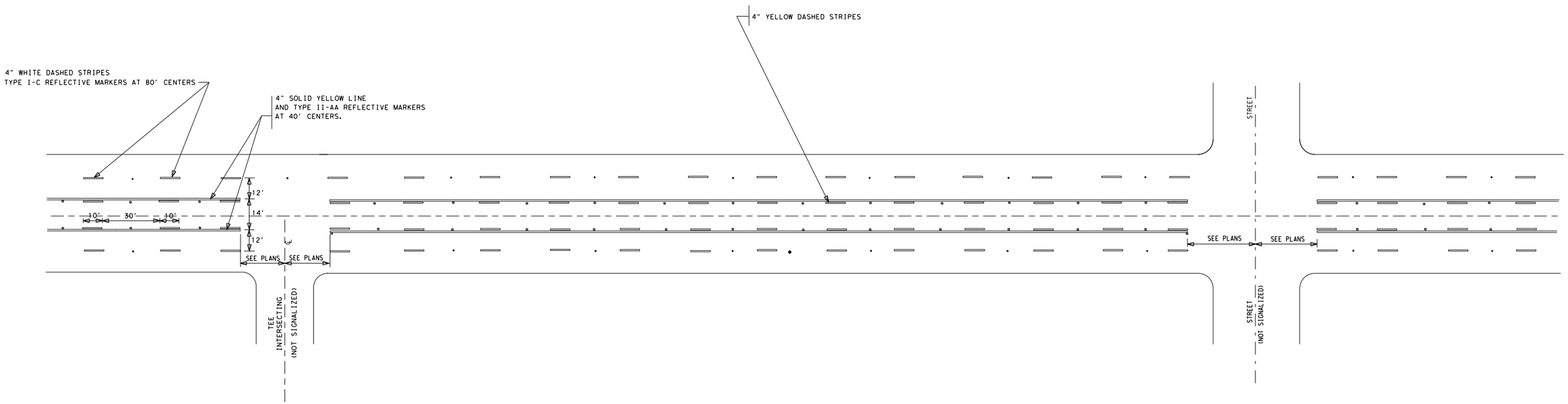

TWO WAY LEFT TURN LANE DETAILS

NON-SIGNALIZED INTERSECTIONS

NOT TO SCALE

NOTE: REFLECTIVE RAISED PAVEMENT MARKERS SHOULD BE IN ACCORDANCE WITH STATE STANDARDS PM(2)-10(POSITIONING GUIDANCE).

PAVEMENT MARKING ARROWS SHALL COMPLY TO TEXAS M.U.T.C.D.

San Antonio District Standard

TWO WAY LEFT TURN LANE DETAILS

TWLTL(2)

© 2002 Texas Department of Transportation

REVISIONS	FED. RD. DIV. NO.	FEDERAL AID PROJECT NO.		SHEET NO.
AUG-2002	6			494
APRIL-2003	STATE	DIST.	COUNTY	
11-07	TEXAS	SAT		
SEPT-2008	CONT.	SECT.	JOB	HIGHWAY NO.
3-2010				

LEVELS DISPLAYED

1	2	3	4	5	6	7	8	9	10	11	12	13	14	15	16	ACC:
17	18	19	20	21	22	23	24	25	26	27	28	29	30	31	32	
33	34	35	36	37	38	39	40	41	42	43	44	45	46	47	48	
49	50	51	52	53	54	55	56	57	58	59	60	61	62	63		

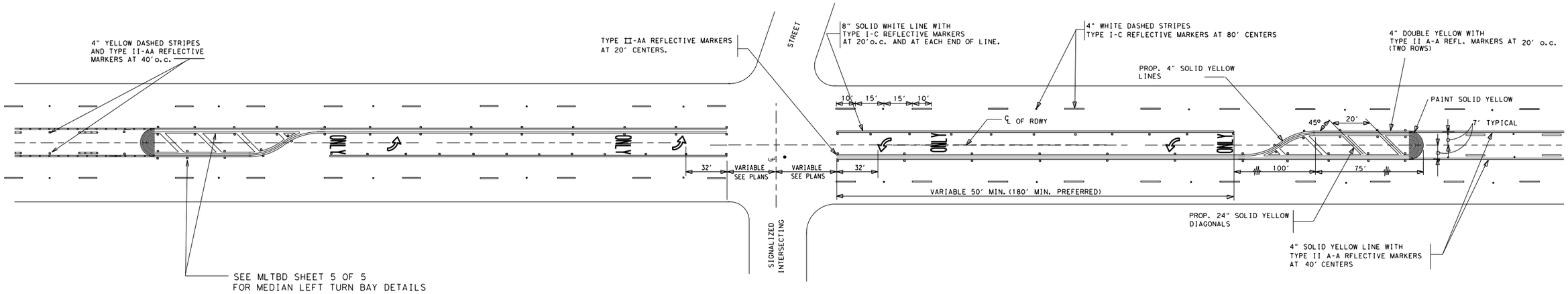

TYPICAL
TWO WAY LEFT TURN LANE DETAILS
SIGNALIZED INTERSECTION

LEGEND

▫ REFLECTIVE MARKER

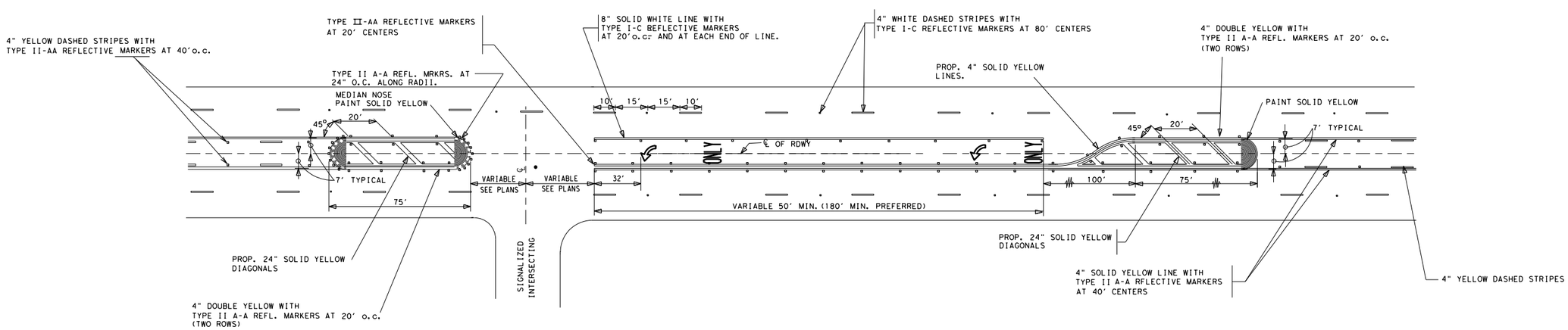

TYPICAL
TWO WAY LEFT TURN LANE DETAILS
SIGNALIZED TEE INTERSECTION

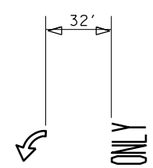

LEGEND
TYPICAL DETAIL

NOTE: REFLECTIVE RAISED PAVEMENT MARKERS SHOULD BE IN ACCORDANCE WITH STATE STANDARDS PM(2)-10(POSITIONING GUIDANCE).

PAVEMENT MARKING ARROWS SHALL COMPLY TO TEXAS M.U.T.C.D.

NOT TO SCALE

San Antonio District Standard

TWO WAY LEFT TURN LANE DETAILS

TWLTL(3)

© 2002 *Texas Department of Transportation*

REVISIONS	FED. RD. DIV. NO.	FEDERAL AID PROJECT NO.		SHEET NO.
AUG-2002	6			495
APRIL-2003	STATE	DIST.	COUNTY	
11-07				
SEPT-2008	TEXAS	SAT		
3-2010	CONT.	SECT.	JOB	HIGHWAY NO.
5-2010				

DISCLAIMER
The use of this standard is governed by the "Texas Engineering Practice Act". No warranty of any kind is made by TxDOT for any purpose whatsoever. TxDOT assumes no responsibility for the conversion of this standard to other formats or for incorrect results or damages resulting from its use.

LEVELS DISPLAYED
1 2 3 4 5 6 7 8 9 10 11 12 13 14 15 16
17 18 19 20 21 22 23 24 25 26 27 28 29 30 31 32
33 34 35 36 37 38 39 40 41 42 43 44 45 46 47 48
49 50 51 52 53 54 55 56 57 58 59 60 61 62 63

ACC:

DISCLAIMER
The use of this standard is governed by the "Texas Engineering Practice Act". No warranty of any kind is made by TxDOT for any purpose whatsoever. TxDOT assumes no responsibility for the conversion of this standard to other formats or for incorrect results or damages resulting from its use.

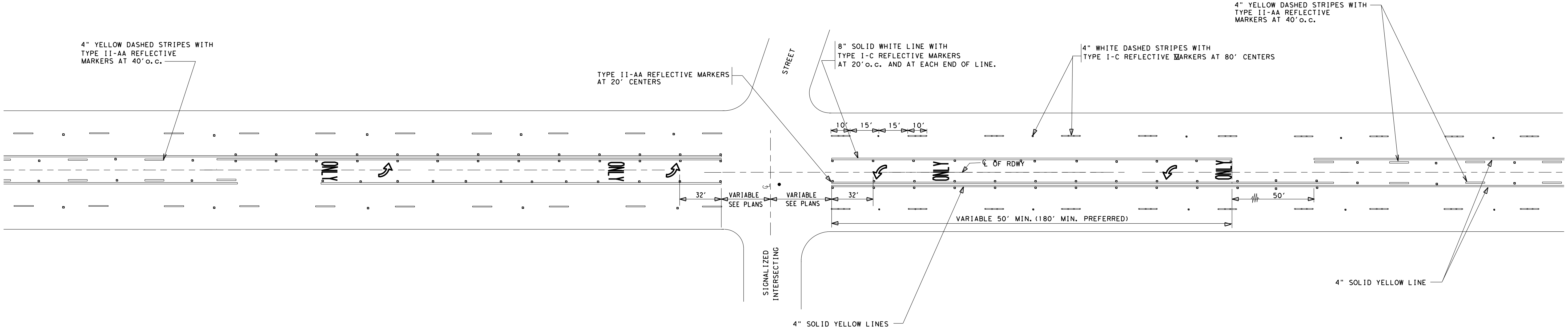

TYPICAL
TWO WAY LEFT TURN LANE DETAILS
SIGNALIZED INTERSECTION

LEGEND

▫ REFLECTIVE MARKER

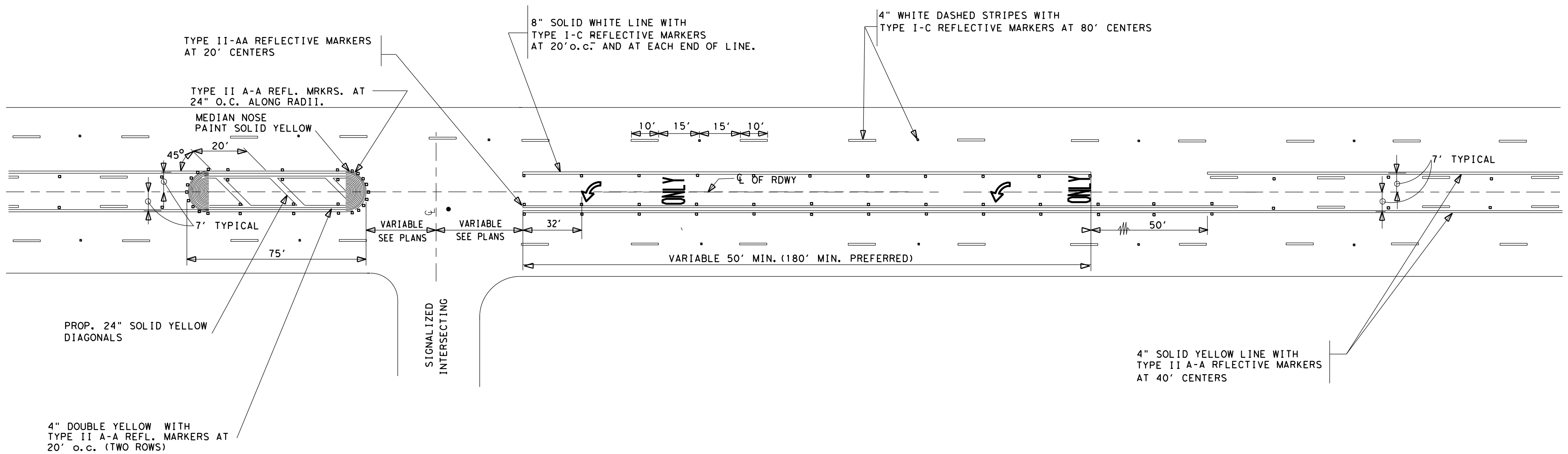

TYPICAL
TWO WAY LEFT TURN LANE DETAILS
SIGNALIZED TEE INTERSECTION

NOTE: REFLECTIVE RAISED PAVEMENT MARKERS SHOULD BE IN ACCORDANCE WITH STATE STANDARDS PM(2)-10(POSITIONING GUIDANCE).

PAVEMENT MARKING ARROWS SHALL COMPLY TO TEXAS M.U.T.C.D.

NOT TO SCALE

San Antonio District Standard

TWO WAY LEFT TURN LANE DETAILS

TWLTL(4)

Texas Department of Transportation ®

© 2002

REVISIONS	FED.RD. DIV.NO.	FEDERAL AID PROJECT NO.		SHEET NO.
AUG-2002	6			496
APRIL-2003	STATE	DIST.	COUNTY	
11-07				
SEPT-2008	TEXAS	SAT		
3-2010	CONT.	SECT.	JOB	HIGHWAY NO.
5-2010				

LEVELS DISPLAYED

1	2	3	4	5	6	7	8	9	10	11	12	13	14	15	16
17	18	19	20	21	22	23	24	25	26	27	28	29	30	31	32
33	34	35	36	37	38	39	40	41	42	43	44	45	46	47	48
49	50	51	52	53	54	55	56	57	58	59	60	61	62	63	

ACC:

GENERAL NOTES:

1. Details show a typical warning sign with two flashing beacon heads, other arrangements are possible. When only one beacon is required, install the upper beacon.
2. See Item 685, "Roadside Flashing Beacon Assemblies" for further requirements.
3. See SMD standard sheets for lateral and vertical clearances and sign mounting details. Install signs as shown on the sign layout sheets.
4. Use either a Screw-In Type Anchor Foundation or a Drilled Shaft Foundation as shown elsewhere in the plans. When plans require a Drilled Shaft Foundation, see standard sheet TS-FD. Install the Screw-In Type Anchor Foundation as per manufacturer's recommendations. On a slope, install one edge at ground level. Screw-In/Drilled Shaft Foundation is subsidiary to Item 685. Installation of a ground rod is not required for solar powered flashing beacon assemblies.
5. When used, provide Screw-In Type Anchor Foundations as shown on TxDOT's Material Producer List (MPL) in the file "Highway Traffic Signals".
6. Use materials specifically designed for attaching cabinets, beacon heads, solar panels, etc., to poles.
7. Install beacon heads as shown here, as shown elsewhere on the plans, or as directed. Use hardware specifically designed for mounting beacon heads on poles.
8. Conduit in foundation and within 6 in. of foundation is subsidiary to the Item 685, "Roadside Flashing Beacon Assemblies."
9. Per manufacturer's recommendations, engage all threads on the pedestal pole base and pipe unless the pipe is fully seated into base. In high winds, use a pole and base collar assembly to add strength and prevent loosening on connection.
10. Provide single pole non-fused watertight breakaway electrical connectors for frangible pedestal pole bases, as shown on TxDOT's MPL in the file "Roadway Illumination and Electrical Supplies." Approved models are listed under Item 685. For ungrounded (hot) conductors, install a breakaway connector with a dummy fuse slug). For grounded (neutral) conductors, install a breakaway connector with a white colored marking and a permanently installed dummy fuse (slug).
11. Install the batteries in a battery box. Place the batteries on a 3/16" thick plastic sheet and connect together. Place a plastic cover (battery bell jar) over the top of each battery and secure the battery bell jar to the battery with a strap. The batteries, bell jars, straps and 3/16" plastic sheet are subsidiary to the Item 685, "Roadside Flashing Beacon Assemblies." When required, install batteries in the flasher cabinet. Wire batteries according to manufacturers recommendations. Provide the number of batteries as required by the manufacturer.
12. See standard sheet Electrical Details (ED) for additional requirements regarding the installation of ground boxes/battery boxes, conduit, and cabinets.
13. Provide clearance as shown above the sidewalk or pavement grade at the edge of the road. When a bottom beacon is not used, mount the bottom of the sign at least 7 ft. above the sidewalk or pavement grade at the edge of the road.
14. Unless otherwise shown on the plans, pole shaft shall be one piece, Schedule 40 Aluminum pipe, ASTM B429 or B221 (Alloy 6061-T6 only). Aluminum conduit will not develop the necessary strength and will not be allowed.
15. Orient solar panel for optimum exposure to sunlight (face to the south). Prior to installation, check the location to ensure there is no overhead obstruction that would block the solar panel from receiving full sunlight. Unless specified elsewhere, mount a minimum of 14' above grade.
16. Ensure height of conduit is below top of anchor bolts.

DISCLAIMER:
The use of this standard is governed by the "Texas Engineering Practice Act". No warranty of any kind is made by TxDOT for any purpose whatsoever. TxDOT assumes no responsibility for the conversion of this standard to other formats or for incorrect results or damages resulting from its use.

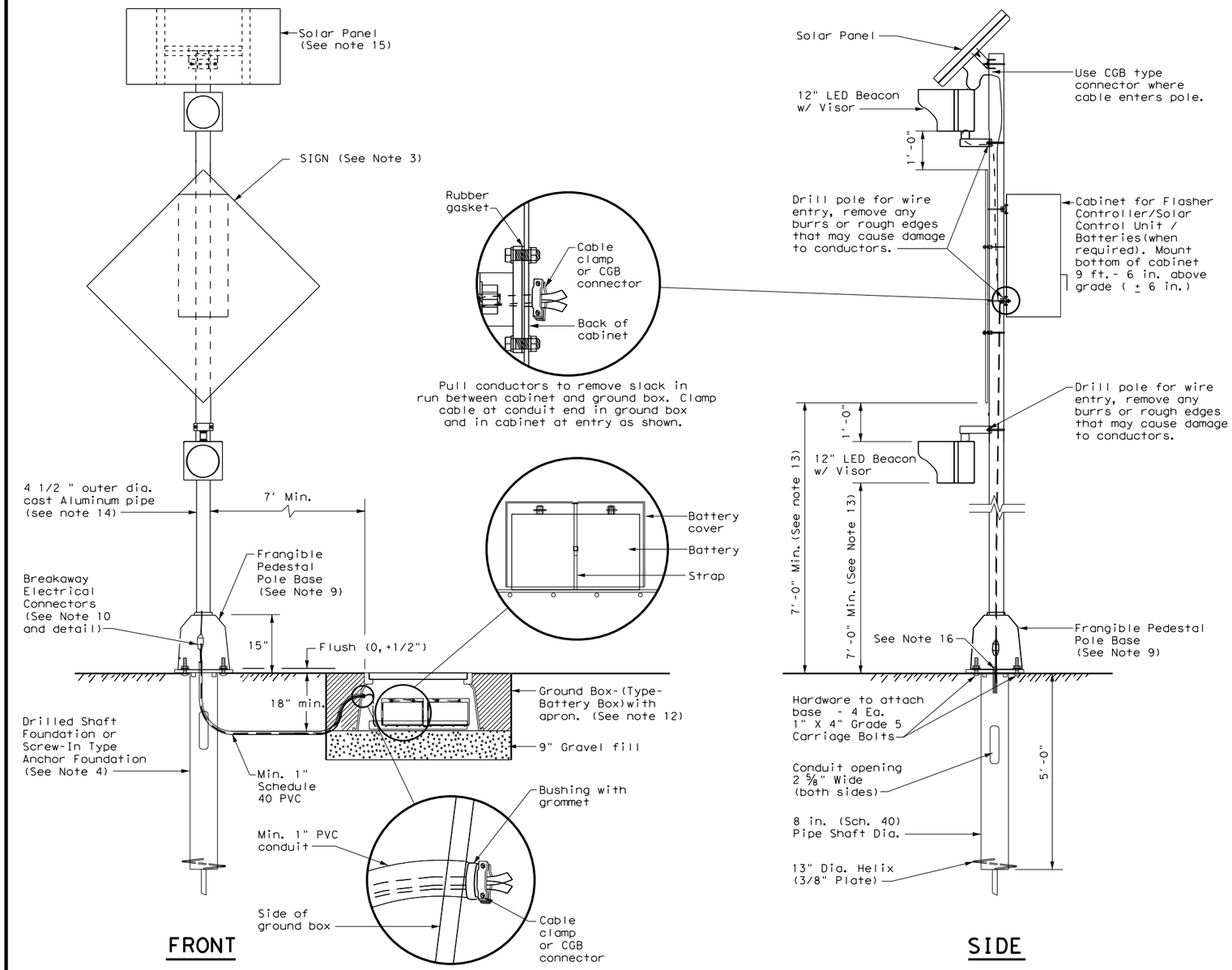

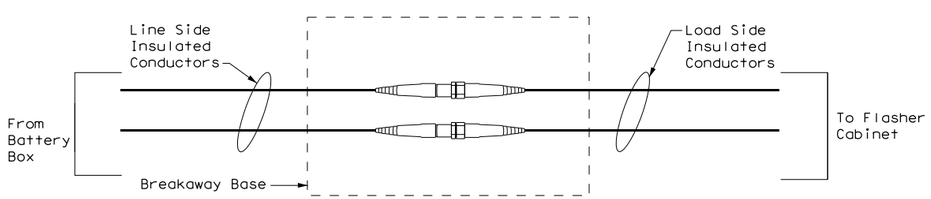

NON-FUSED BREAKAWAY ELECTRICAL CONNECTORS

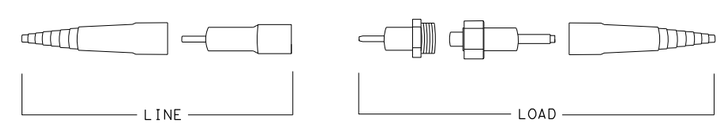

NON-FUSED BREAKAWAY ELECTRICAL CONNECTORS
EXPLODED VIEW

Texas Department of Transportation

Traffic Operations Division Standard

SOLAR POWERED ROADSIDE FLASHING BEACON ASSEMBLY DETAILS

SPRFBA(1)-13

FILE: spb1-13.dgn	DN: TxDOT	CK: TxDOT	DW: TxDOT	CK: TxDOT
©TxDOT May 2003	CONT	SECT	JOB	HIGHWAY
REVISIONS 12-04 3-13	DIST		COUNTY	SHEET NO. 497

75A

DATE:
FILE:

DISCLAIMER: The use of this standard is governed by the "Texas Engineering Practice Act". No warranty of any kind is made by TxDOT for any purpose whatsoever. TxDOT assumes no responsibility for the conversion of this standard to other formats or for incorrect results or damages resulting from its use.

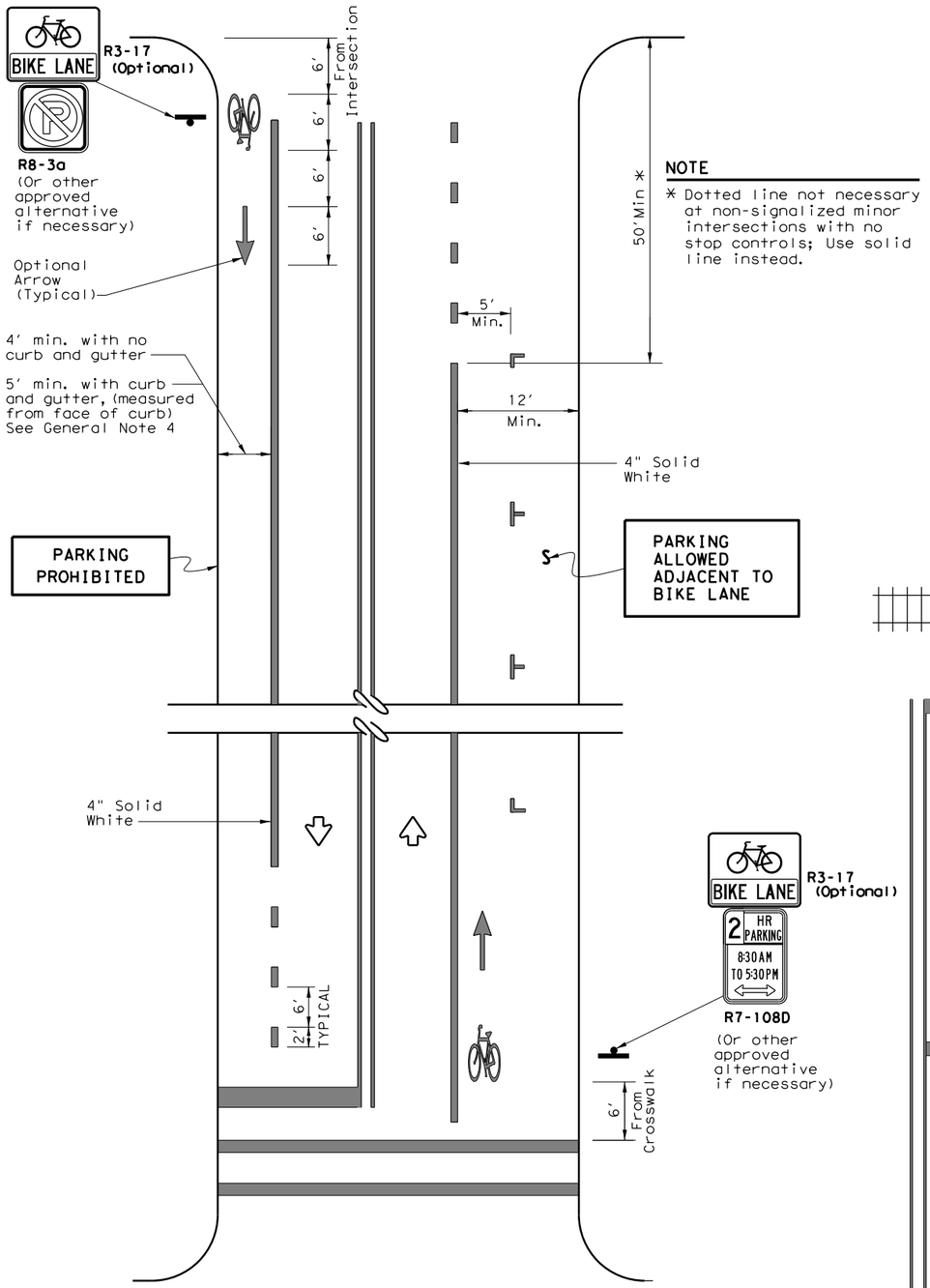

NOTE

* Dotted line not necessary at non-signalized minor intersections with no stop controls; Use solid line instead.

GENERAL NOTES

1. All bicycle lane pavement markings shall be white unless otherwise noted.
2. All pavement marking materials shall meet the required Department Material Specifications as specified by the plans.
3. Exact sign placement and details are shown elsewhere in the plans.
4. The current edition of AASHTO'S Guide for the Development of Bicycle Facilities should be referenced for variations in design, other geometric conditions, and lane width options.
5. Other bicycle lane symbol or word markings as shown in the Texas Manual on Uniform Traffic Control Devices may be used. Details for words, arrows and symbols as shown in the Standard Highway Sign Designs for Texas.
6. The "BIKE LANE" (R3-17) sign with the "AHEAD" (R3-17a) sign mounted directly below should be installed in advance of the beginning of a marked bike lane.
7. The "BIKE LANE" (R3-17) sign with the "END" (R3-17b) sign mounted directly below should be installed at the end of marked bicycle lane.

LEGEND	
	Sign
	Traffic Flow

SPECIFICATION REFERENCE TABLE	
Traffic Paint	DMS-8200
Hot Applied Thermoplastic	DMS-8220
Permanent Prefabricated Pavement Markings	DMS-8240
Glass Traffic Beads	DMS-8290

NOTES

1. Bicycle lane pavement markings typically repeated after each intersection or signalized driveway.
2. On uninterrupted sections of roadway, bicycle lane pavement markings typically repeated as follows:

   -1200' for 45 MPH or less roads
   -2500' for 50 MPH and greater roads.

TWO-WAY STREET

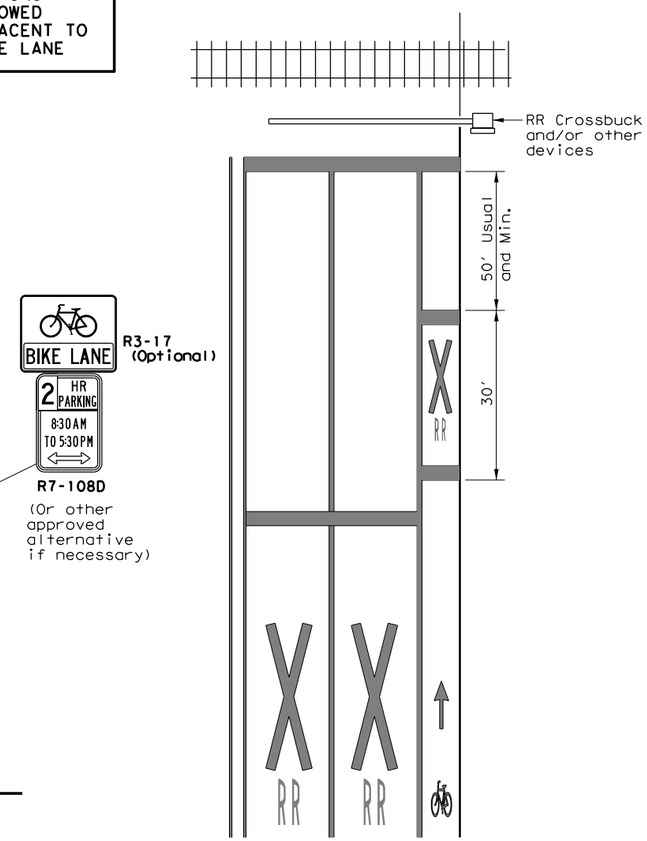

(See RCPM Standard for travel lane details)

RAILROAD CROSSING APPROACH

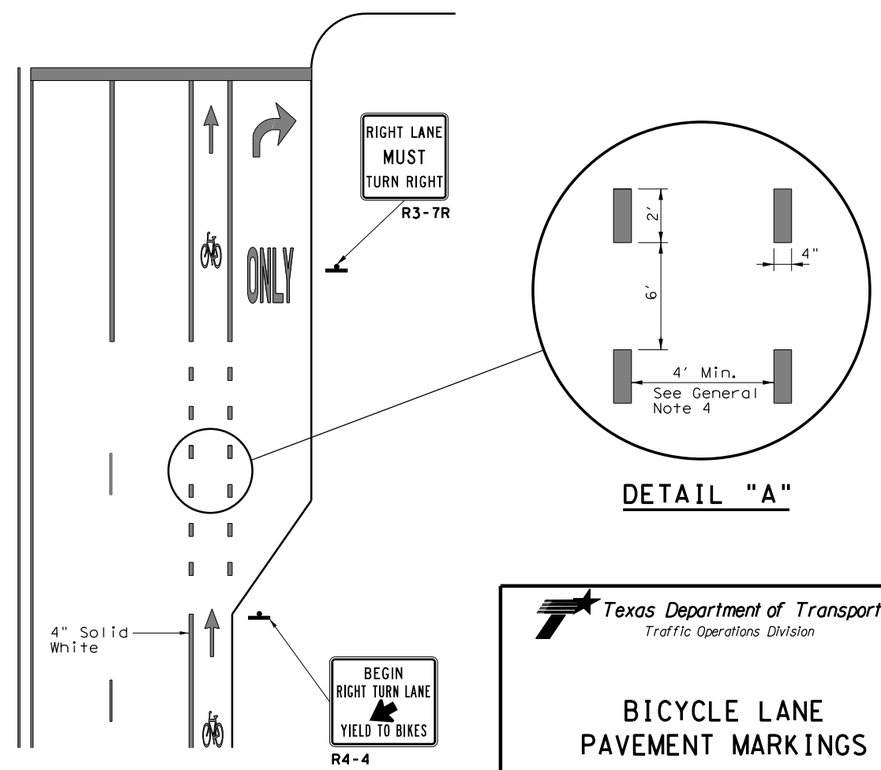

DETAIL "A"

RIGHT TURN ONLY LANE

Texas Department of Transportation
Traffic Operations Division

BICYCLE LANE PAVEMENT MARKINGS

BLPM-10

© TxDOT May 2010	DN: TXDOT	CK: TXDOT	DW: TXDOT	CK: TXDOT
REVISIONS	CONT	SECT	JOB	HIGHWAY
	DIST		COUNTY	SHEET NO. 498

DATE:
FILE:

CP&Y
CHECKPRINT

REVIEWER
Initial:
Date:
VERIFIED
Initial:
Date:
PROCESSED
Initial:
Date:
VERIFIED
Initial:
Date:

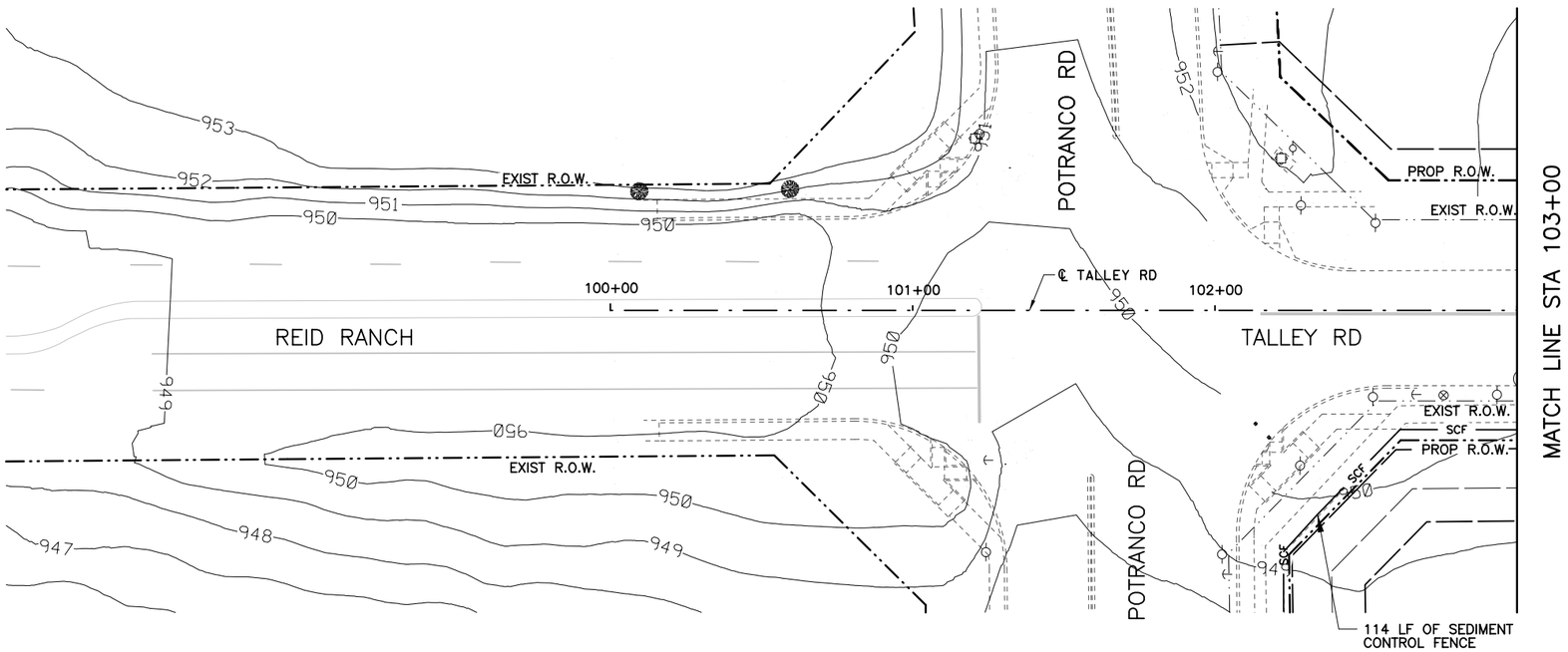

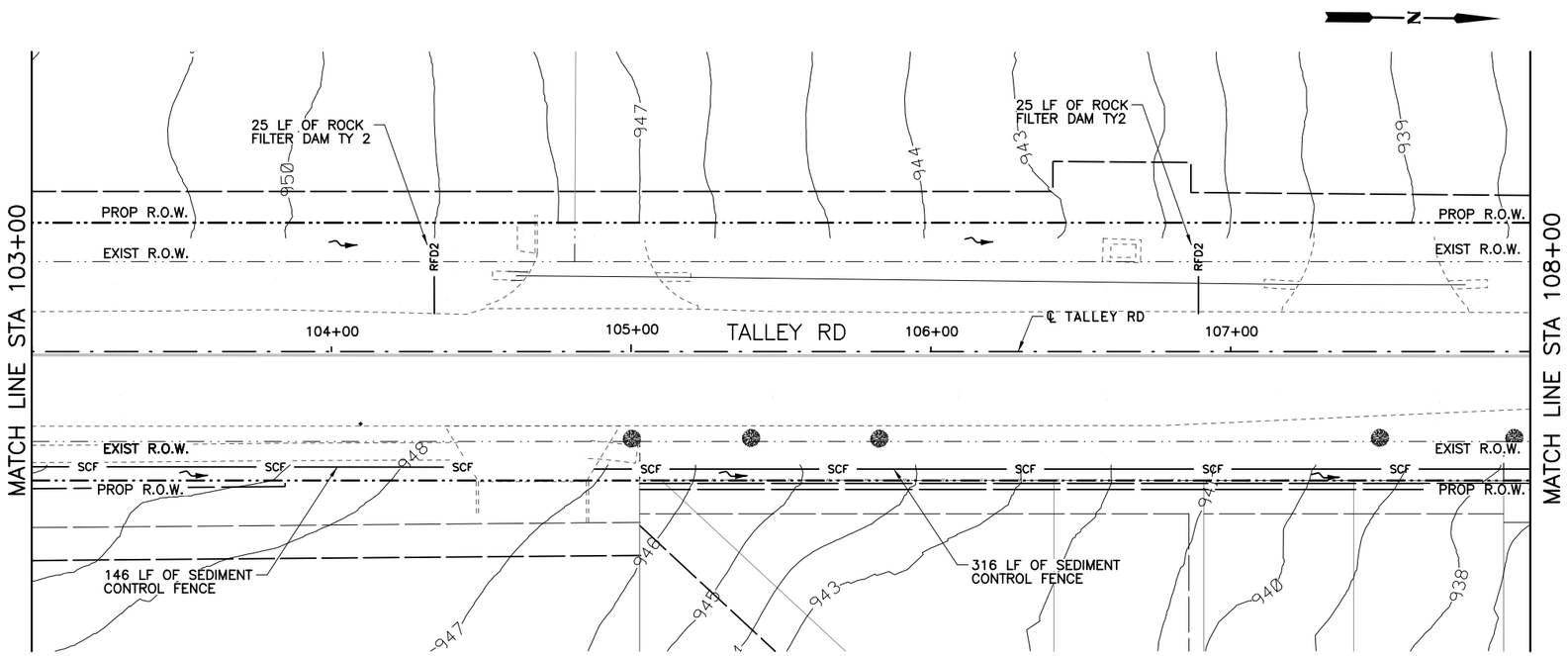

QUANTITY SUMMARY TALLEY RD.

TXDOT	ITEM	UNIT	QUANT
0506 6002	ROCK FILTER DAM (INSTALL)(TY 2)	LF	50
0506 6011	ROCK FILTER DAM (REMOVE)	LF	50
0506 6038	SEDIMENT CONTROL FENCE (INSTALL)	LF	576
0506 6039	SEDIMENT CONTROL FENCE (REMOVE)	LF	576
0506 6041	EROSION CONTROL LOG (INSTALL)	LF	0
0506 6043	EROSION CONTROL LOG (REMOVE)	LF	0

LEGEND

- SCF — SEDIMENT CONTROL FENCE
- RFD2 — ROCK FILTER DAM TY 2
- EROSION CONTROL LOG
- DITCH FLOW ARROWS
- TRAFFIC FLOW ARROWS
- EXISTING RIGHT-OF-WAY
- PROPOSED RIGHT-OF-WAY

HORIZ.
25 12.5 0 25 50
SCALE FEET

THIS DOCUMENT IS FOR INTERIM REVIEW AND IS NOT INTENDED FOR CONSTRUCTION, BIDDING, PERMIT OR OTHER UNAUTHORIZED PURPOSES. THESE DOCUMENTS/PLANS WERE AUTHORIZED TO BE RELEASED.

BY: BRYAN J. SPINA ,P.E.
LICENSE NO.: 103776 DATE: 2/21/2017

BEXAR COUNTY
PUBLIC WORKS DEPARTMENT

NO	DATE	DESCRIPTION	DWG	CHK

REVISIONS

CP&Y
T.B.P.E. FIRM # 1741

LNV
TBPE FIRM NO. F-366
TBPLS FIRM NO. 10126502
engineers | architects | surveyors
8918 TESORO DR., SUITE 401
SAN ANTONIO, TX 78217
WWW.LNVINC.COM
PH. (210) 822-2232
FAX (210) 822-4032

TALLEY ROAD
SW3P LAYOUT
PHASE 1
SHEET 1 OF 14

PROJECT NUMBER:		SHEET NO.
0849-01-046		499
DESIGNED BY: –	ROADWAY/HIGHWAY:	
CHECKED BY: –	TALLEY ROAD	
DRAWN BY: –	STATE	COUNTY
CHECKED BY: –	TEXAS	BEXAR

cpybw_ANSIB.tbl
cpypdf_ANSIB.pltcfg
pw:/Active Projects/BEXA14048.01/8.00 Plans and Drawings/8.30 Cut Sheets/8.3.13 SW3P/14048SW3P01.dgn
2/21/2017 5:07:28 PM bspina

CP&Y
CHECKPRINT

REVIEWER
Initial:
Date:
VERIFIED
Initial:
Date:
PROCESSED
Initial:
Date:
VERIFIED
Initial:
Date:

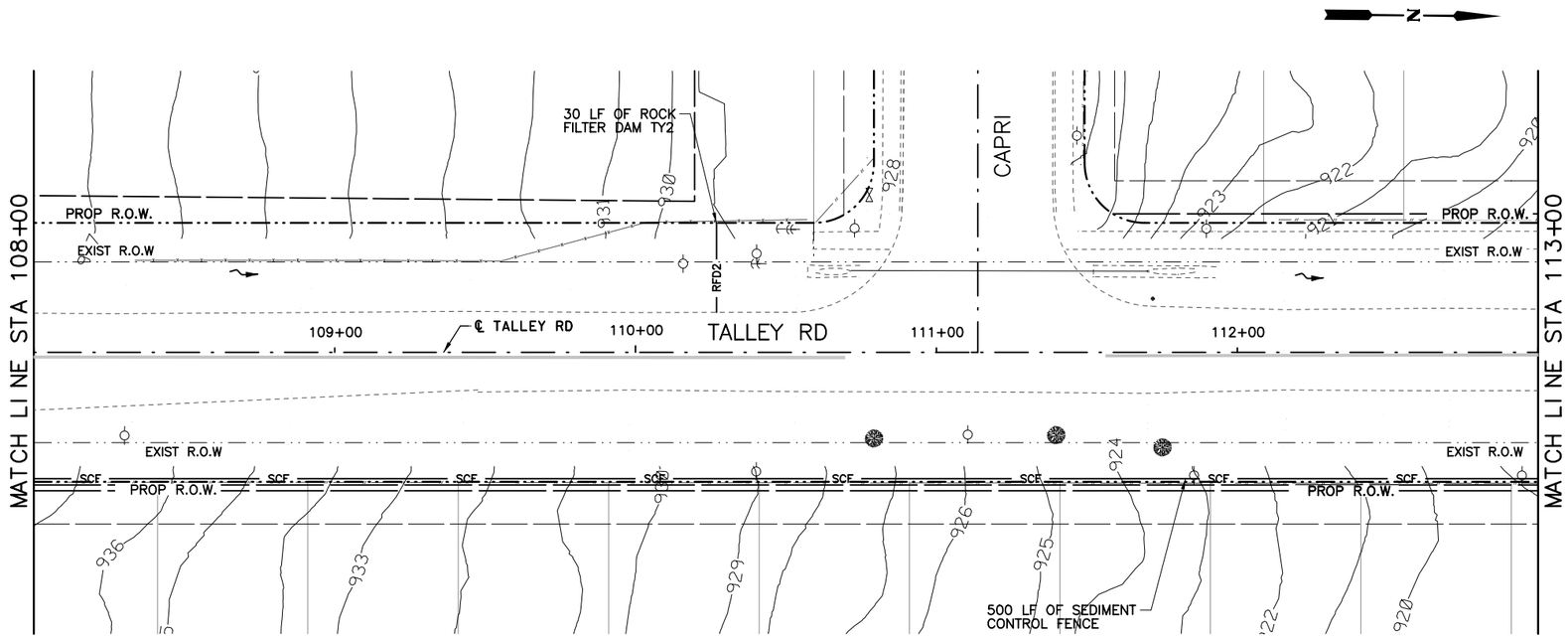

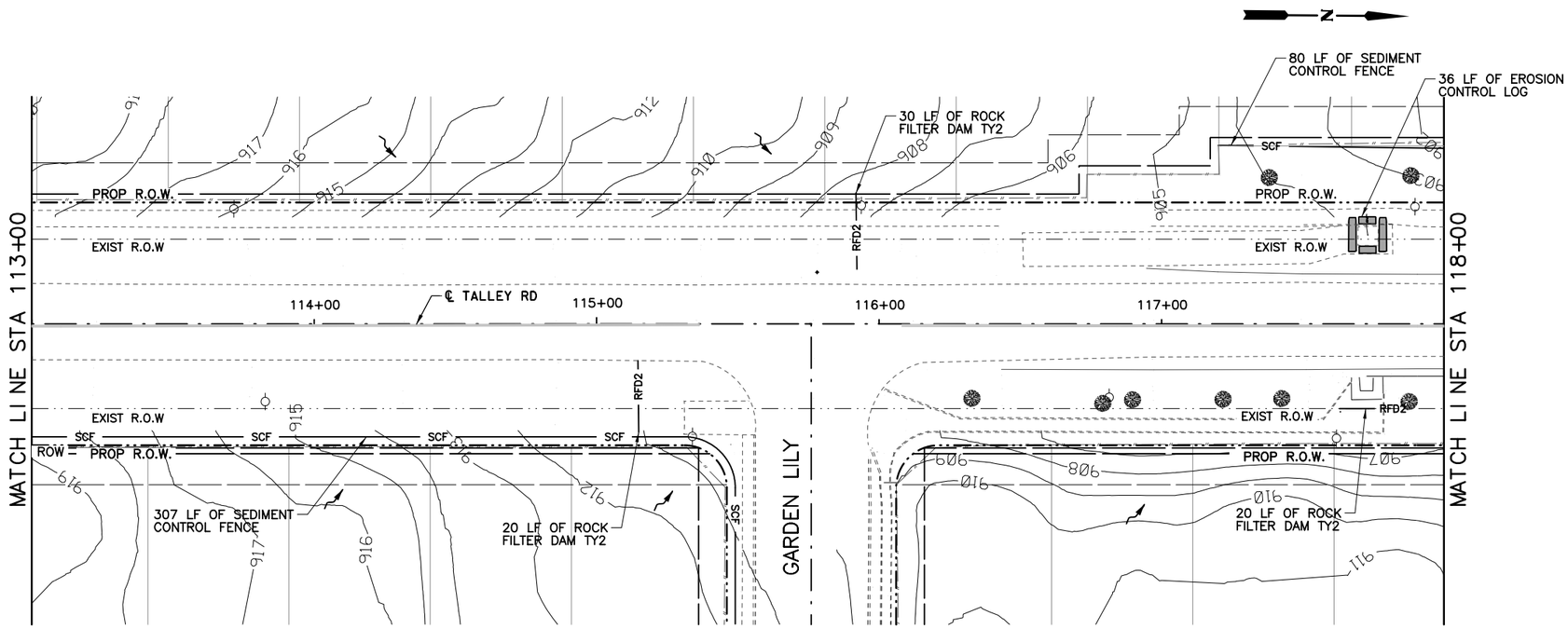

QUANTITY SUMMARY TALLEY RD.

TXDOT	ITEM	UNIT	QUANT
0506 6002	ROCK FILTER DAM (INSTALL)(TY 2)	LF	100
0506 6011	ROCK FILTER DAM (REMOVE)	LF	100
0506 6038	SEDIMENT CONTROL FENCE (INSTALL)	LF	887
0506 6039	SEDIMENT CONTROL FENCE (REMOVE)	LF	887
0506 6041	EROSION CONTROL LOG (INSTALL)	LF	36
0506 6043	EROSION CONTROL LOG (REMOVE)	LF	36

LEGEND

- SCF — SEDIMENT CONTROL FENCE
- RFD2 — ROCK FILTER DAM TY 2
- EROSION CONTROL LOG
- DITCH FLOW ARROWS
- TRAFFIC FLOW ARROWS
- EXISTING RIGHT-OF-WAY
- PROPOSED RIGHT-OF-WAY

HORIZ.
25 12.5 0 25 50
SCALE FEET

THIS DOCUMENT IS FOR INTERIM REVIEW AND IS NOT INTENDED FOR CONSTRUCTION, BIDDING, PERMIT OR OTHER UNAUTHORIZED PURPOSES. THESE DOCUMENTS/PLANS WERE AUTHORIZED TO BE RELEASED.

BY: BRYAN J. SPINA ,P.E.
LICENSE NO.: 103776 DATE: 2/21/2017

BEXAR COUNTY
PUBLIC WORKS DEPARTMENT

NO	DATE	DESCRIPTION	DWG	CHK

REVISIONS

CP&Y
T.B.P.E. FIRM # 1741

LNV
TBPE FIRM NO. F-366
TBPLS FIRM NO. 10126502
engineers | architects | surveyors
8918 TESORO DR., SUITE 401
SAN ANTONIO, TX 78217
WWW.LNVINC.COM
PH. (210) 822-2232
FAX (210) 822-4032

TALLEY ROAD
SW3P LAYOUT
PHASE 1
SHEET 2 OF 14

PROJECT NUMBER:		SHEET NO.
0849-01-046		500
DESIGNED BY: –	ROADWAY/HIGHWAY:	
CHECKED BY: –	TALLEY ROAD	
DRAWN BY: –	STATE	COUNTY
CHECKED BY: –	TEXAS	BEXAR

cpybw_ANSIB.tbl
cpypdf_ANSIB.pltcfg
pw:/Active Projects/BEXA14048.01/8.00 Plans and Drawings/8.30 Cut Sheets/8.3.13 SW3P/14048SW3P02.dgn
2/21/2017 5:07:37 PM bspina

CP&Y
CHECKPRINT

REVIEWER
Initial:
Date:
VERIFIED
Initial:
Date:
PROCESSED
Initial:
Date:
VERIFIED
Initial:
Date:

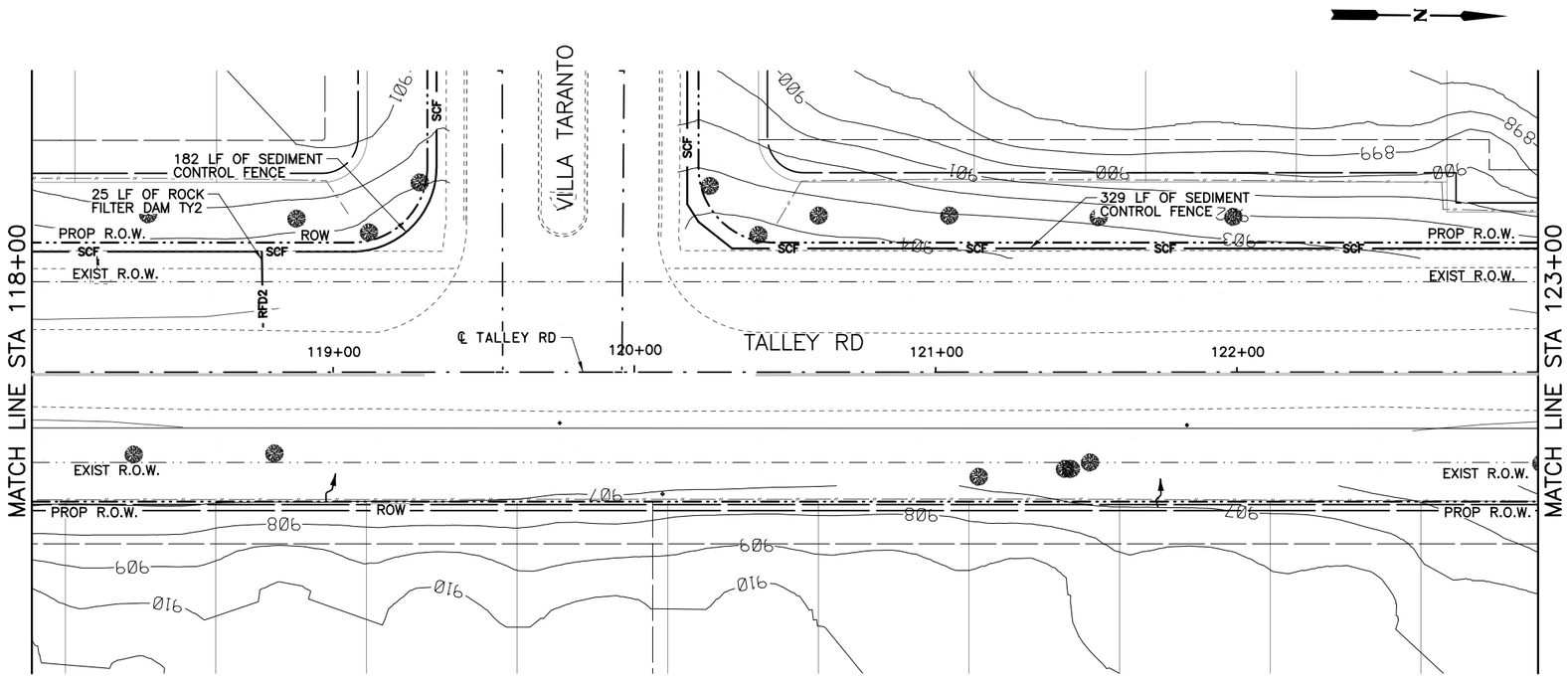

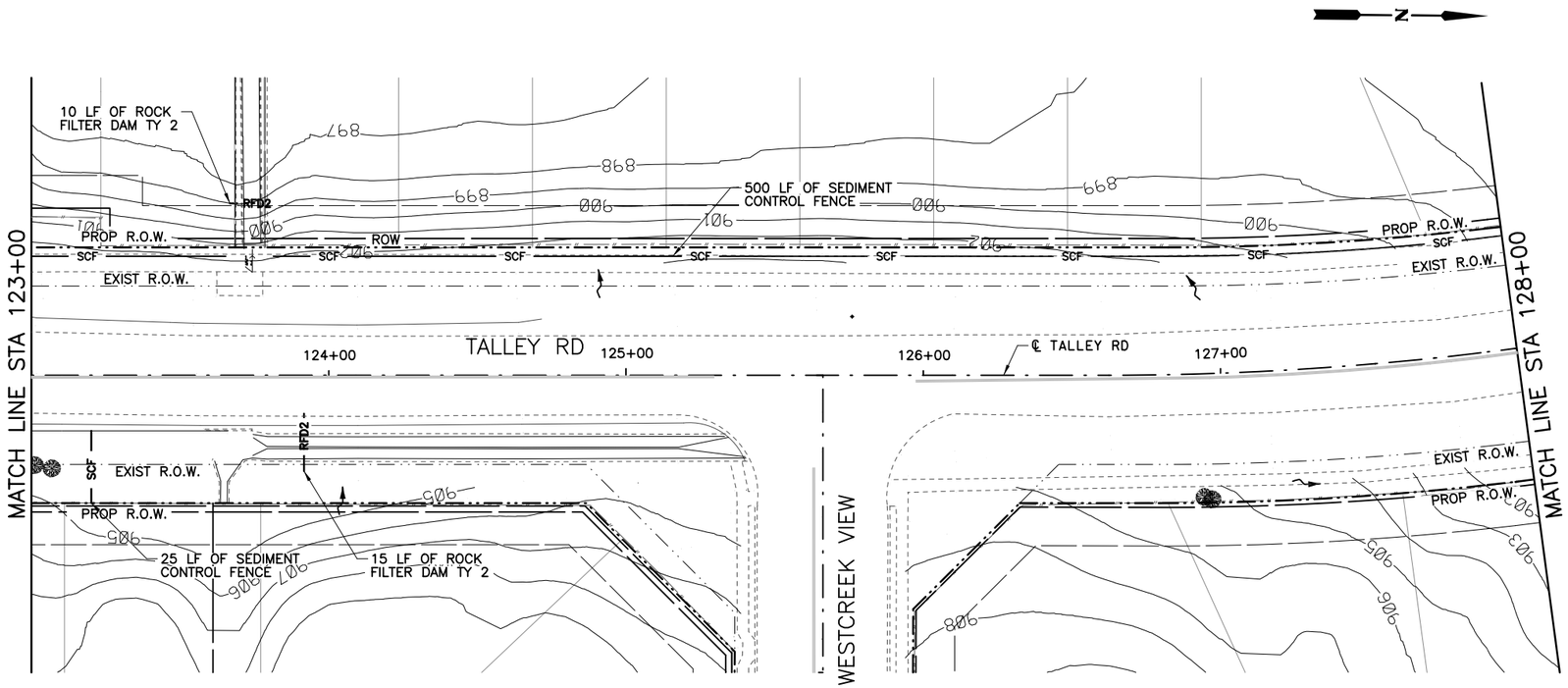

QUANTITY SUMMARY TALLEY RD.

TXDOT	ITEM	UNIT	QUANT
0506 6002	ROCK FILTER DAM (INSTALL)(TY 2)	LF	50
0506 6011	ROCK FILTER DAM (REMOVE)	LF	50
0506 6038	SEDIMENT CONTROL FENCE (INSTALL)	LF	1,036
0506 6039	SEDIMENT CONTROL FENCE (REMOVE)	LF	1,036
0506 6041	EROSION CONTROL LOG (INSTALL)	LF	0
0506 6043	EROSION CONTROL LOG (REMOVE)	LF	0

LEGEND

- SCF — SEDIMENT CONTROL FENCE
- RFD2 — ROCK FILTER DAM TY 2
- EROSION CONTROL LOG
- DITCH FLOW ARROWS
- TRAFFIC FLOW ARROWS
- EXISTING RIGHT-OF-WAY
- PROPOSED RIGHT-OF-WAY

HORIZ.
25 12.5 0 25 50
SCALE FEET

THIS DOCUMENT IS FOR INTERIM REVIEW AND IS NOT INTENDED FOR CONSTRUCTION, BIDDING, PERMIT OR OTHER UNAUTHORIZED PURPOSES. THESE DOCUMENTS/PLANS WERE AUTHORIZED TO BE RELEASED.

BY: BRYAN J. SPINA ,P.E.
LICENSE NO.: 103776 DATE: 2/21/2017

BEXAR COUNTY
PUBLIC WORKS DEPARTMENT

NO	DATE	DESCRIPTION	DWG	CHK

REVISIONS

CP&Y
T.B.P.E. FIRM # 17741

LNV
TBPE FIRM NO. F-366
TBPLS FIRM NO. 10126502
engineers | architects | surveyors
8918 TESORO DR., SUITE 401
SAN ANTONIO, TX 78217
PH. (210) 822-2232
FAX (210) 822-4032
WWW.LNVINC.COM

TALLEY ROAD
SW3P LAYOUT
PHASE 1
SHEET 3 OF 14

PROJECT NUMBER:		SHEET NO.
0849-01-046		501
DESIGNED BY: –	ROADWAY/HIGHWAY:	
CHECKED BY: –	TALLEY ROAD	
DRAWN BY: –	STATE	COUNTY
CHECKED BY: –	TEXAS	BEXAR

cpybw_ANSIB.tbl
cpypdf_ANSIB.pltcfg
pw:/Active Projects/BEXA14048.01/8.00 Plans and Drawings/8.30 Cut Sheets/8.3.13 SW3P/14048SW3P03.dgn
2/21/2017 5:07:47 PM bspina

CP&Y
CHECKPRINT

REVIEWER
Initial:
Date:
VERIFIED
Initial:
Date:
PROCESSED
Initial:
Date:
VERIFIED
Initial:
Date:

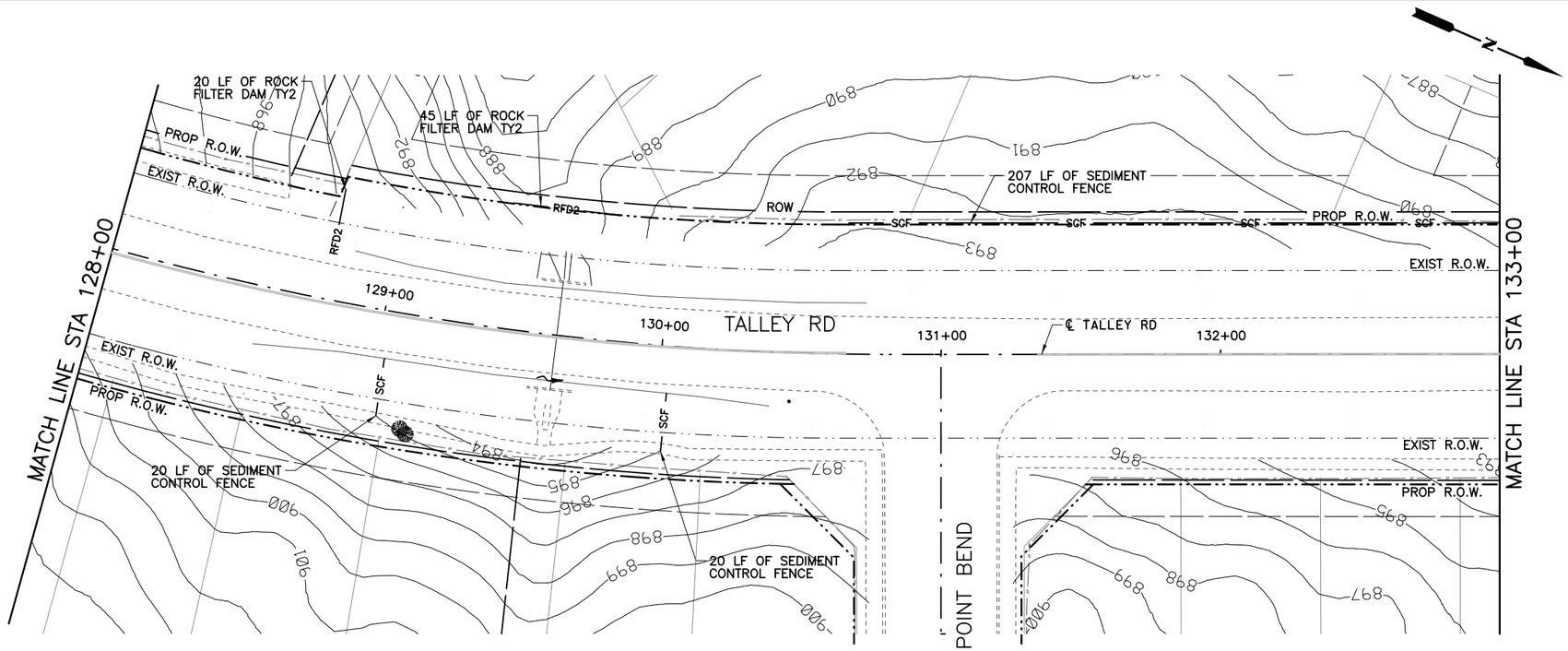

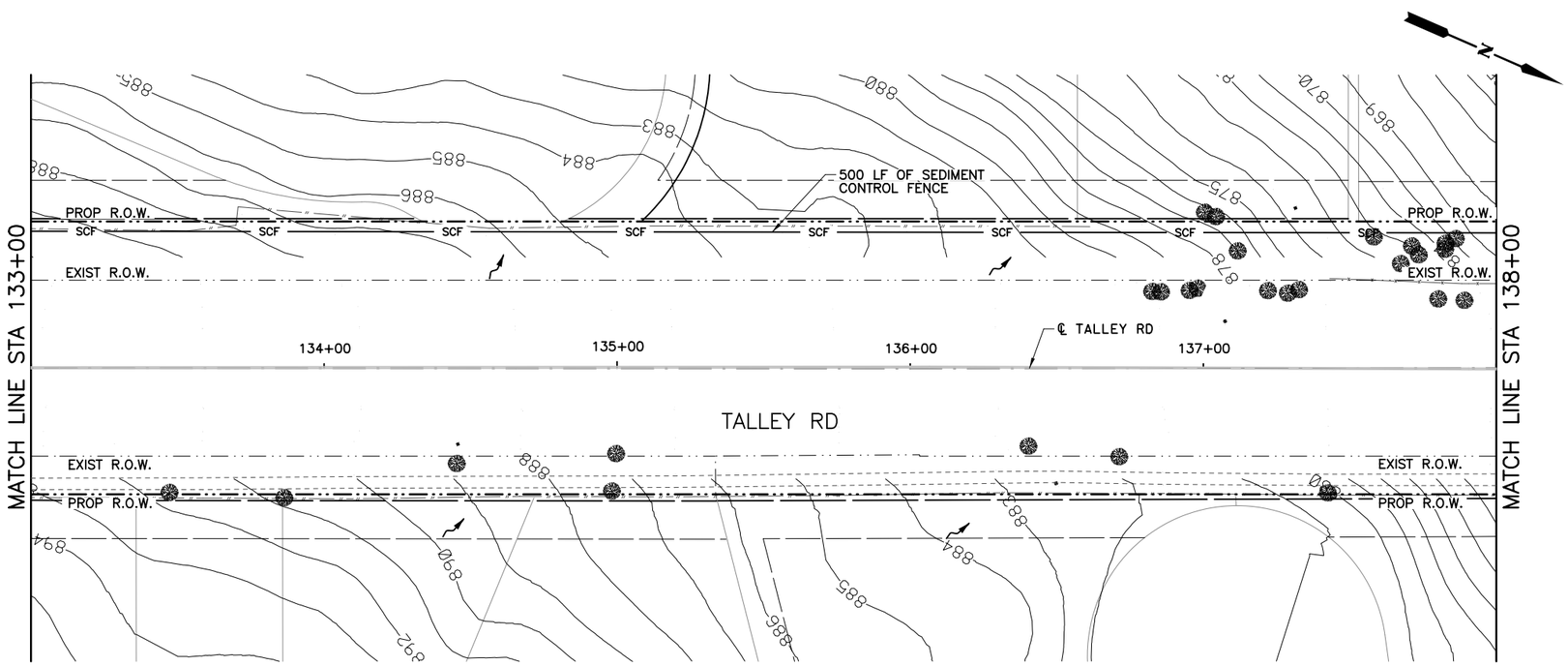

QUANTITY SUMMARY TALLEY RD.

TXDOT	ITEM	UNIT	QUANT
0506 6002	ROCK FILTER DAM (INSTALL)(TY 2)	LF	65
0506 6011	ROCK FILTER DAM (REMOVE)	LF	65
0506 6038	SEDIMENT CONTROL FENCE (INSTALL)	LF	747
0506 6039	SEDIMENT CONTROL FENCE (REMOVE)	LF	747
0506 6041	EROSION CONTROL LOG (INSTALL)	LF	0
0506 6043	EROSION CONTROL LOG (REMOVE)	LF	0

LEGEND

- SCF — SEDIMENT CONTROL FENCE
- RFD2 — ROCK FILTER DAM TY 2
- EROSION CONTROL LOG
- DITCH FLOW ARROWS
- TRAFFIC FLOW ARROWS
- EXISTING RIGHT-OF-WAY
- PROPOSED RIGHT-OF-WAY

HORIZ.
25 12.5 0 25 50
SCALE FEET

THIS DOCUMENT IS FOR INTERIM REVIEW AND IS NOT INTENDED FOR CONSTRUCTION, BIDDING, PERMIT OR OTHER UNAUTHORIZED PURPOSES. THESE DOCUMENTS/PLANS WERE AUTHORIZED TO BE RELEASED.

BY: BRYAN J. SPINA ,P.E.
LICENSE NO.: 103776 DATE: 2/21/2017

BEXAR COUNTY
PUBLIC WORKS DEPARTMENT

NO	DATE	DESCRIPTION	DWG	CHK

REVISIONS

CP&Y
T.B.P.E. FIRM # 1741

LNV
engineers | architects | surveyors
8918 TESORO DR., SUITE 401
SAN ANTONIO, TX 78217
WWW.LNVINC.COM
TBPE FIRM NO. F-306
TBPLS FIRM NO. 10126502
PH. (210) 822-2232
FAX (210) 822-4032

TALLEY ROAD

SW3P LAYOUT
PHASE 1
SHEET 4 OF 14

PROJECT NUMBER:		SHEET NO.
0849-01-046		502
DESIGNED BY: –	ROADWAY/HIGHWAY:	
CHECKED BY: –	TALLEY ROAD	
DRAWN BY: –	STATE	COUNTY
CHECKED BY: –	TEXAS	BEXAR

cpybw_ANSIB.tbl
cpypdf_ANSIB.pltcfg
pw:/Active Projects/BEXA14048.01/8.00 Plans and Drawings/8.30 Cut Sheets/8.3.13 SW3P/14048SW3P04.dgn
2/21/2017 5:07:55 PM bspina

CP&Y
CHECKPRINT

REVIEWER
Initial:
Date:
VERIFIED
Initial:
Date:
PROCESSED
Initial:
Date:
VERIFIED
Initial:
Date:

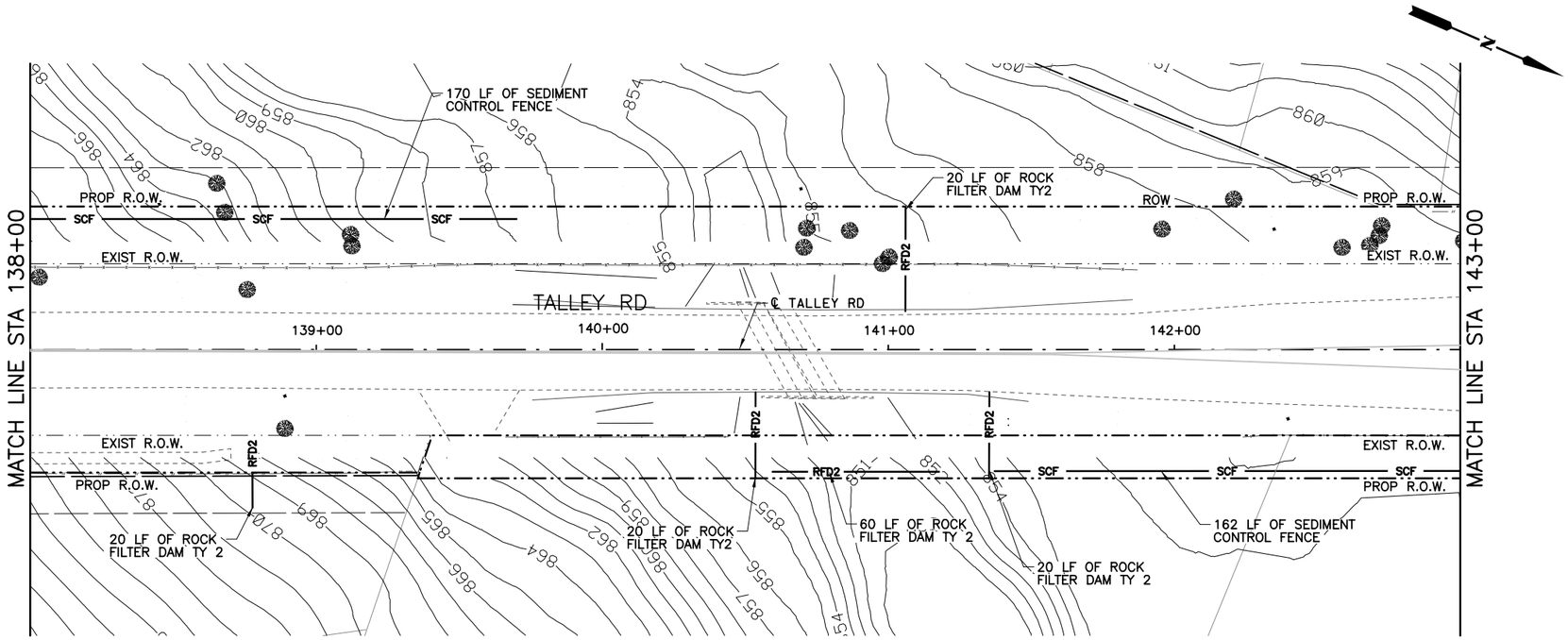

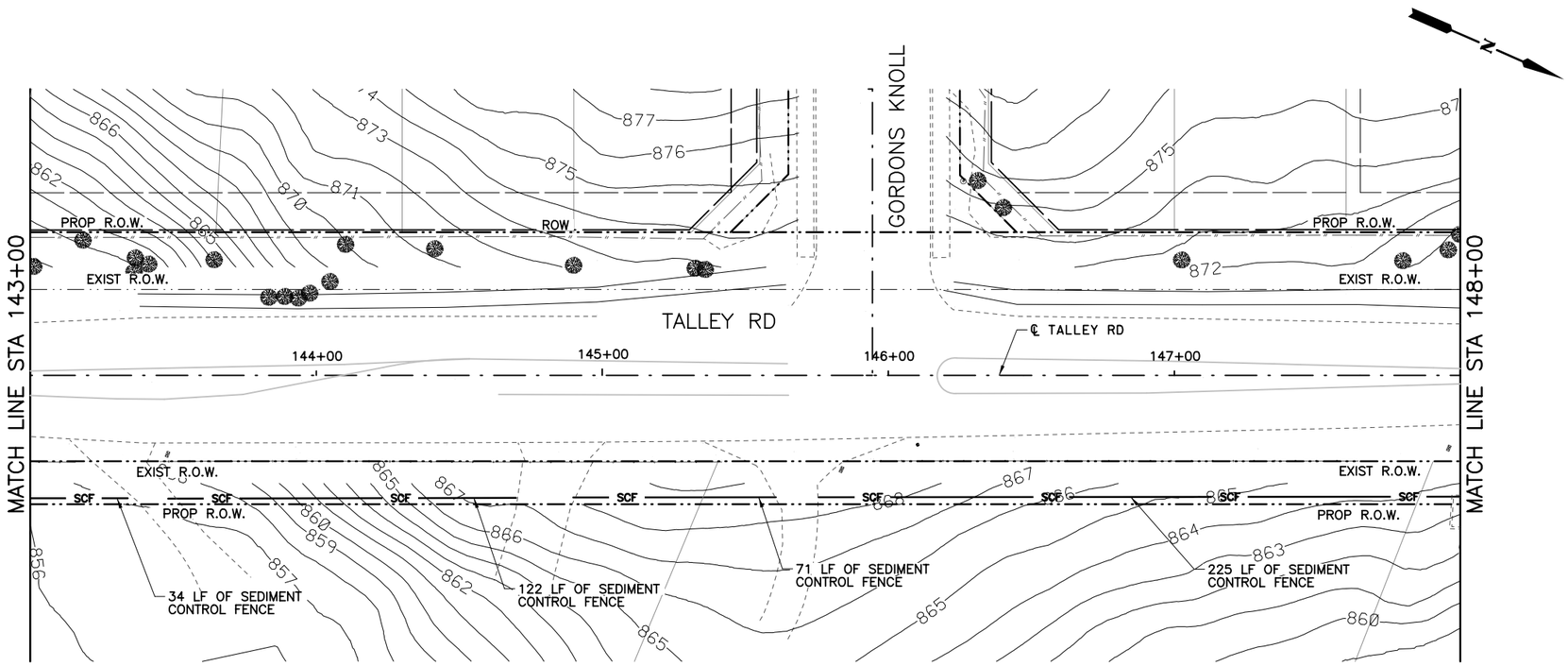

QUANTITY SUMMARY TALLEY RD.

TXDOT	ITEM	UNIT	QUANT
0506 6002	ROCK FILTER DAM (INSTALL)(TY 2)	LF	80
0506 6011	ROCK FILTER DAM (REMOVE)	LF	80
0506 6038	SEDIMENT CONTROL FENCE (INSTALL)	LF	784
0506 6039	SEDIMENT CONTROL FENCE (REMOVE)	LF	784
0506 6041	EROSION CONTROL LOG (INSTALL)	LF	0
0506 6043	EROSION CONTROL LOG (REMOVE)	LF	0

LEGEND

- SCF — SEDIMENT CONTROL FENCE
- RFD2 — ROCK FILTER DAM TY 2
- EROSION CONTROL LOG
- DITCH FLOW ARROWS
- TRAFFIC FLOW ARROWS
- EXISTING RIGHT-OF-WAY
- PROPOSED RIGHT-OF-WAY

HORIZ.
25 12.5 0 25 50
SCALE FEET

THIS DOCUMENT IS FOR INTERIM REVIEW AND IS NOT INTENDED FOR CONSTRUCTION, BIDDING, PERMIT OR OTHER UNAUTHORIZED PURPOSES. THESE DOCUMENTS/PLANS WERE AUTHORIZED TO BE RELEASED.

BY: BRYAN J. SPINA ,P.E.
LICENSE NO.: 103776 DATE: 2/21/2017

BEXAR COUNTY
PUBLIC WORKS DEPARTMENT

NO	DATE	DESCRIPTION	DWG	CHK

REVISIONS

CP&Y
T.B.P.E. FIRM # 1741

LNV
TBPE FIRM NO. F-366
TBPLS FIRM NO. 10126502
engineers | architects | surveyors
8918 TESORO DR., SUITE 401
SAN ANTONIO, TX 78217
PH. (210) 822-2232
FAX (210) 822-4032
WWW.LNVINC.COM

TALLEY ROAD

SW3P LAYOUT
PHASE 1
SHEET 5 OF 14

PROJECT NUMBER:	SHEET NO.
0849-01-046	503

DESIGNED BY:	–	ROADWAY/HIGHWAY:	
CHECKED BY:	–	TALLEY ROAD	
DRAWN BY:	–	STATE	COUNTY
CHECKED BY:	–	TEXAS	BEXAR

cpybw_ANSIB.tbl
cpypdf_ANSIB.pltcfg
pw:/Active Projects/BEXA14048.01/8.00 Plans and Drawings/8.30 Cut Sheets/8.3.13 SW3P/14048SW3P05.dgn
2/21/2017 5:08:04 PM bspina

CP&Y
CHECKPRINT

REVIEWER
Initial:
Date:
VERIFIED
Initial:
Date:
PROCESSED
Initial:
Date:
VERIFIED
Initial:
Date:

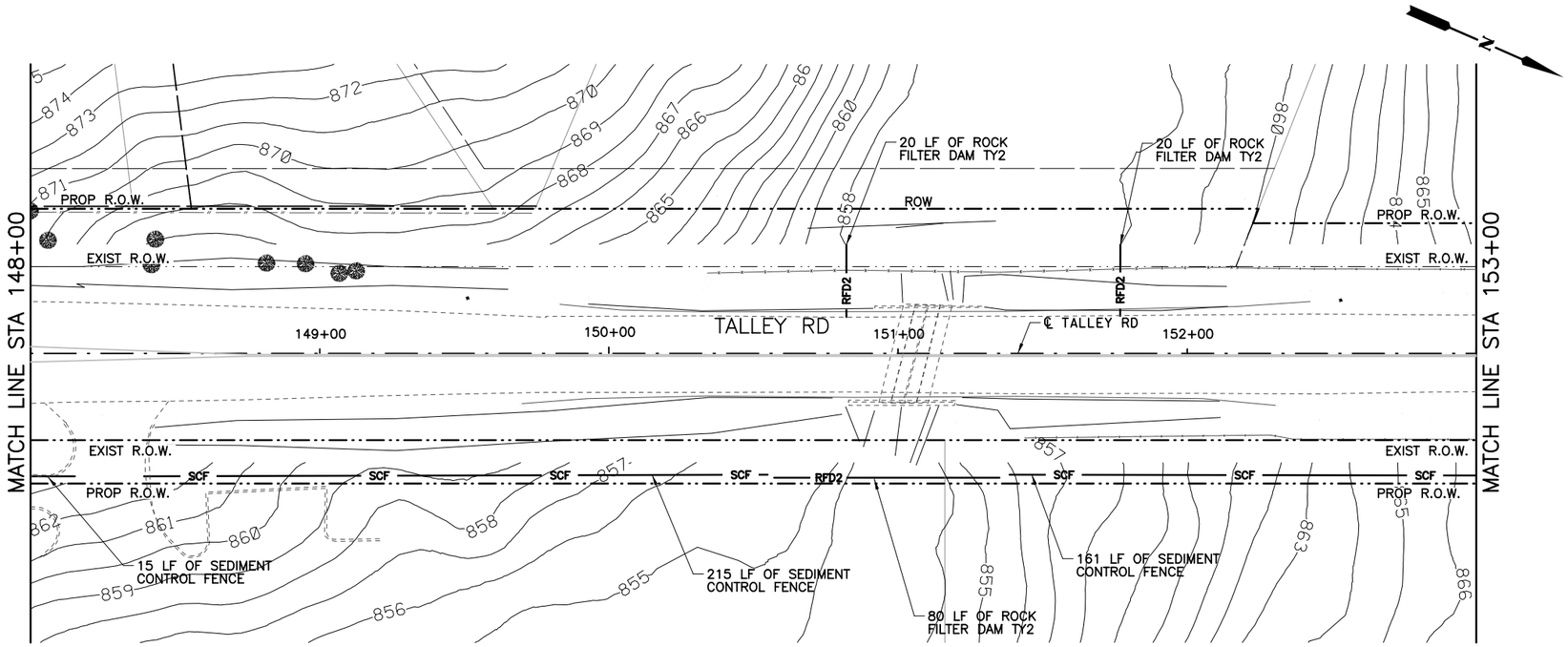

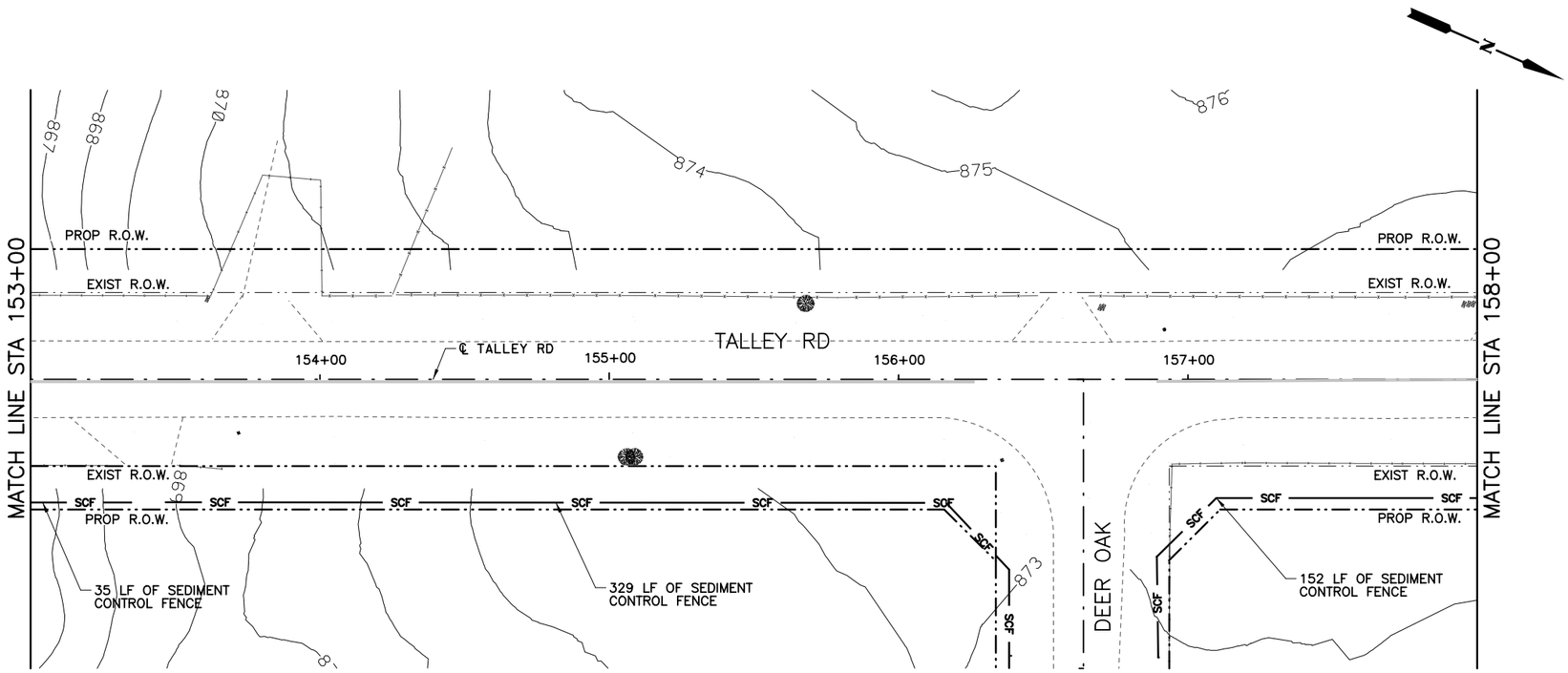

QUANTITY SUMMARY TALLEY RD.

TXDOT	ITEM	UNIT	QUANT
0506 6002	ROCK FILTER DAM (INSTALL)(TY 2)	LF	120
0506 6011	ROCK FILTER DAM (REMOVE)	LF	120
0506 6038	SEDIMENT CONTROL FENCE (INSTALL)	LF	907
0506 6039	SEDIMENT CONTROL FENCE (REMOVE)	LF	907
0506 6041	EROSION CONTROL LOG (INSTALL)	LF	0
0506 6043	EROSION CONTROL LOG (REMOVE)	LF	0

LEGEND

- SCF — SEDIMENT CONTROL FENCE
- RFD2 — ROCK FILTER DAM TY 2
- EROSION CONTROL LOG
- DITCH FLOW ARROWS
- TRAFFIC FLOW ARROWS
- EXISTING RIGHT-OF-WAY
- PROPOSED RIGHT-OF-WAY

HORIZ.
25 12.5 0 25 50
SCALE FEET

THIS DOCUMENT IS FOR INTERIM REVIEW AND IS NOT INTENDED FOR CONSTRUCTION, BIDDING, PERMIT OR OTHER UNAUTHORIZED PURPOSES. THESE DOCUMENTS/PLANS WERE AUTHORIZED TO BE RELEASED.

BY: BRYAN J. SPINA ,P.E.
LICENSE NO.: 103776 DATE: 2/21/2017

BEXAR COUNTY
PUBLIC WORKS DEPARTMENT

NO	DATE	DESCRIPTION	DWG	CHK

REVISIONS

CP&Y
T.B.P.E. FIRM # 1741

LNV
TBPE FIRM NO. F-306
TBPLS FIRM NO. 10126502
engineers | architects | surveyors
8918 TESORO DR., SUITE 401
SAN ANTONIO, TX 78217
WWW.LNVINC.COM
PH. (210) 822-2232
FAX (210) 822-4032

TALLEY ROAD
SW3P LAYOUT
PHASE 1
SHEET 6 OF 14

PROJECT NUMBER:		SHEET NO.
0849-01-046		504
DESIGNED BY: –	ROADWAY/HIGHWAY:	
CHECKED BY: –	TALLEY ROAD	
DRAWN BY: –	STATE	COUNTY
CHECKED BY: –	TEXAS	BEXAR

cpybw_ANSIB.tbl
cpypdf_ANSIB.pltcfg
pw:/Active Projects/BEXA14048.01/8.00 Plans and Drawings/8.30 Cut Sheets/8.3.13 SW3P/14048SW3P06.dgn
2/21/2017 5:08:14 PM bspina

CP&Y
CHECKPRINT

REVIEWER
Initial:
Date:
VERIFIED
Initial:
Date:
PROCESSED
Initial:
Date:
VERIFIED
Initial:
Date:

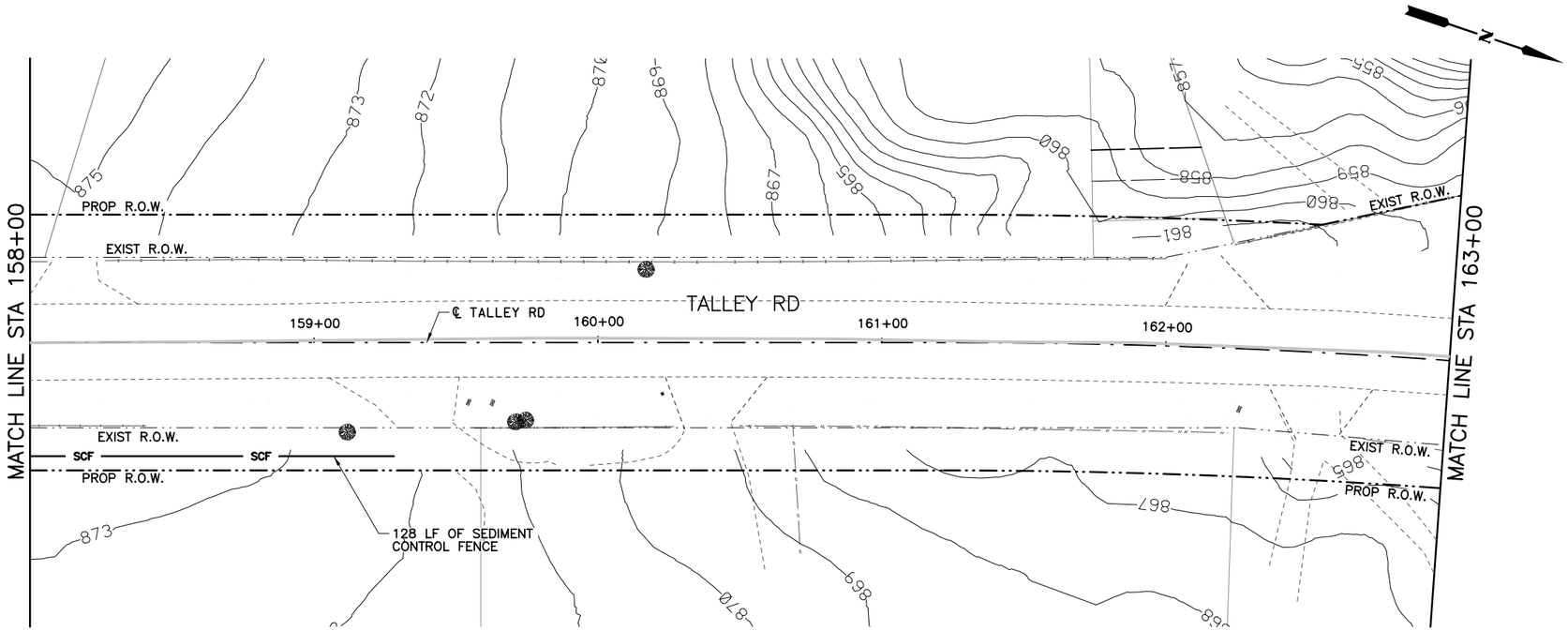

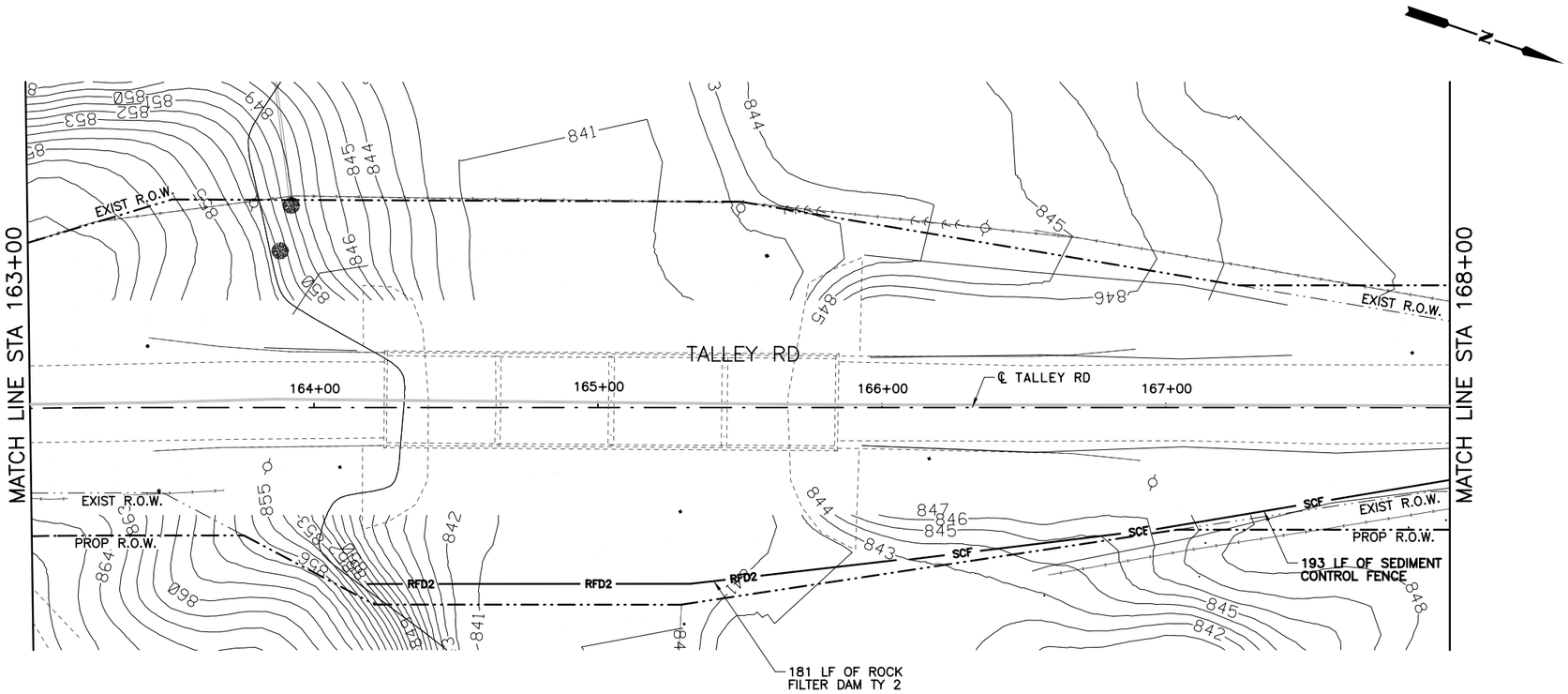

QUANTITY SUMMARY TALLEY RD.

TXDOT	ITEM	UNIT	QUANT
0506 6002	ROCK FILTER DAM (INSTALL)(TY 2)	LF	181
0506 6011	ROCK FILTER DAM (REMOVE)	LF	181
0506 6038	SEDIMENT CONTROL FENCE (INSTALL)	LF	321
0506 6039	SEDIMENT CONTROL FENCE (REMOVE)	LF	321
0506 6041	EROSION CONTROL LOG (INSTALL)	LF	0
0506 6043	EROSION CONTROL LOG (REMOVE)	LF	0

LEGEND

- SCF — SEDIMENT CONTROL FENCE
- RFD2 — ROCK FILTER DAM TY 2
- EROSION CONTROL LOG
- DITCH FLOW ARROWS
- TRAFFIC FLOW ARROWS
- EXISTING RIGHT-OF-WAY
- PROPOSED RIGHT-OF-WAY

HORIZ.
25 12.5 0 25 50
SCALE FEET

THIS DOCUMENT IS FOR INTERIM REVIEW AND IS NOT INTENDED FOR CONSTRUCTION, BIDDING, PERMIT OR OTHER UNAUTHORIZED PURPOSES. THESE DOCUMENTS/PLANS WERE AUTHORIZED TO BE RELEASED.

BY: BRYAN J. SPINA ,P.E.
LICENSE NO.: 103776 DATE: 2/21/2017

BEXAR COUNTY
PUBLIC WORKS DEPARTMENT

NO	DATE	DESCRIPTION	DWG	CHK

REVISIONS

CP&Y
T.B.P.E. FIRM # 1741
TBPE FIRM NO. F-366
TBPLS FIRM NO. 10126502

LNV
engineers | architects | surveyors
8918 TESORO DR., SUITE 401
SAN ANTONIO, TX 78217
WWW.LNVINC.COM
PH. (210) 822-2232
FAX (210) 822-4032

TALLEY ROAD
SW3P LAYOUT
PHASE 1
SHEET 7 OF 14

PROJECT NUMBER:		SHEET NO.
0849-01-046		505
DESIGNED BY: –	ROADWAY/HIGHWAY:	
CHECKED BY: –	TALLEY ROAD	
DRAWN BY: –	STATE	COUNTY
CHECKED BY: –	TEXAS	BEXAR

2/21/2017 5:08:25 PM bspina
cpybw_ANSIB.tbl
cpypdf_ANSIB.pltcfg
pw:/Active Projects/BEXA14048.01/8.00 Plans and Drawings/8.30 Cut Sheets/8.3.13 SW3P/14048SW3P07.dgn

pw:/Active Projects/BEXA14048.01/8.00 Plans and Drawings/8.30 Cut Sheets/8.3.13 SW3P/14048SW3P07.dgn

CP&Y
CHECKPRINT

REVIEWER
Initial:
Date:
VERIFIED
Initial:
Date:
PROCESSED
Initial:
Date:
VERIFIED
Initial:
Date:

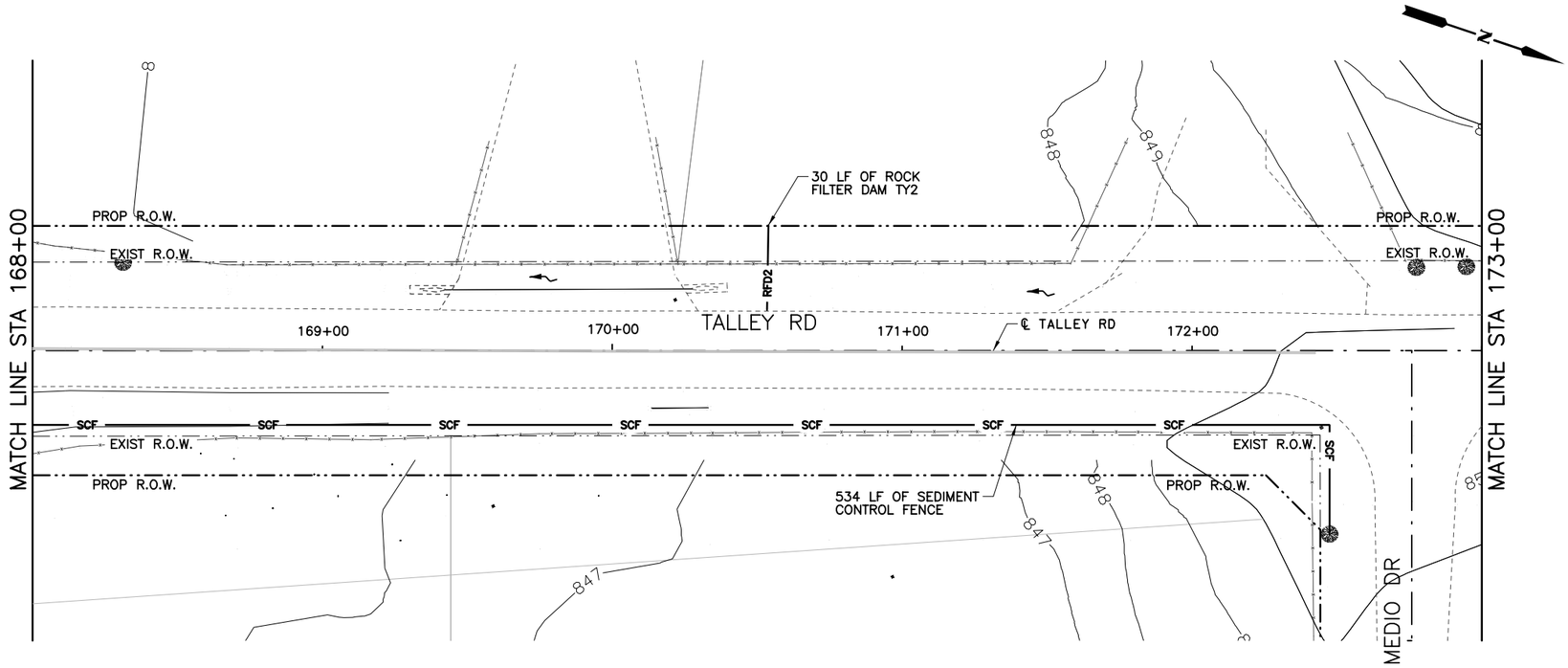

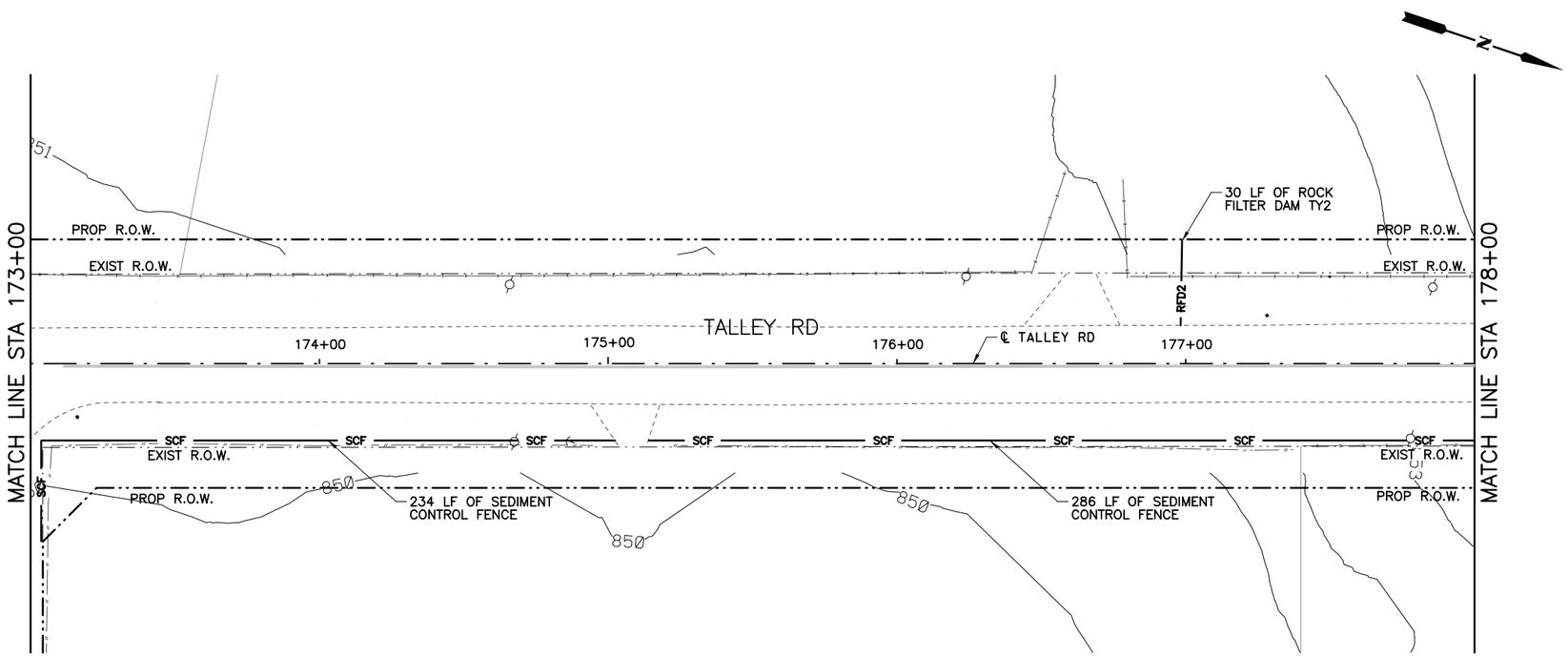

QUANTITY SUMMARY TALLEY RD.

TXDOT	ITEM	UNIT	QUANT
0506 6002	ROCK FILTER DAM (INSTALL)(TY 2)	LF	60
0506 6011	ROCK FILTER DAM (REMOVE)	LF	60
0506 6038	SEDIMENT CONTROL FENCE (INSTALL)	LF	1,054
0506 6039	SEDIMENT CONTROL FENCE (REMOVE)	LF	1,054
0506 6041	EROSION CONTROL LOG (INSTALL)	LF	0
0506 6043	EROSION CONTROL LOG (REMOVE)	LF	0

LEGEND

- SCF — SEDIMENT CONTROL FENCE
- RFD2 — ROCK FILTER DAM TY 2
- EROSION CONTROL LOG
- DITCH FLOW ARROWS
- TRAFFIC FLOW ARROWS
- EXISTING RIGHT-OF-WAY
- PROPOSED RIGHT-OF-WAY

HORIZ.
25 12.5 0 25 50
SCALE FEET

THIS DOCUMENT IS FOR INTERIM REVIEW AND IS NOT INTENDED FOR CONSTRUCTION, BIDDING, PERMIT OR OTHER UNAUTHORIZED PURPOSES. THESE DOCUMENTS/PLANS WERE AUTHORIZED TO BE RELEASED.

BY: BRYAN J. SPINA ,P.E.
LICENSE NO.: 103776 DATE: 2/21/2017

BEXAR COUNTY
PUBLIC WORKS DEPARTMENT

NO	DATE	DESCRIPTION	DWG	CHK

REVISIONS

CP&Y
T.B.P.E. FIRM # 1741

LNV
TBPE FIRM NO. F-306
TBPLS FIRM NO. 10126502
engineers | architects | surveyors
8918 TESORO DR., SUITE 401
SAN ANTONIO, TX 78217
PH. (210) 822-2232
FAX (210) 822-4032
WWW.LNVINC.COM

TALLEY ROAD
SW3P LAYOUT
PHASE 1
SHEET 8 OF 14

PROJECT NUMBER:		SHEET NO.
0849-01-046		506
DESIGNED BY: –	ROADWAY/HIGHWAY:	
CHECKED BY: –	TALLEY ROAD	
DRAWN BY: –	STATE	COUNTY
CHECKED BY: –	TEXAS	BEXAR

cpybw_ANSIB.tbl
cpypdf_ANSIB.pltcfg
pw:/Active Projects/BEXA14048.01/8.00 Plans and Drawings/8.30 Cut Sheets/8.3.13 SW3P/14048SW3P08.dgn
2/21/2017 5:08:34 PM bspina

CP&Y
CHECKPRINT

REVIEWER
Initial:
Date:
VERIFIED
Initial:
Date:
PROCESSED
Initial:
Date:
VERIFIED
Initial:
Date:

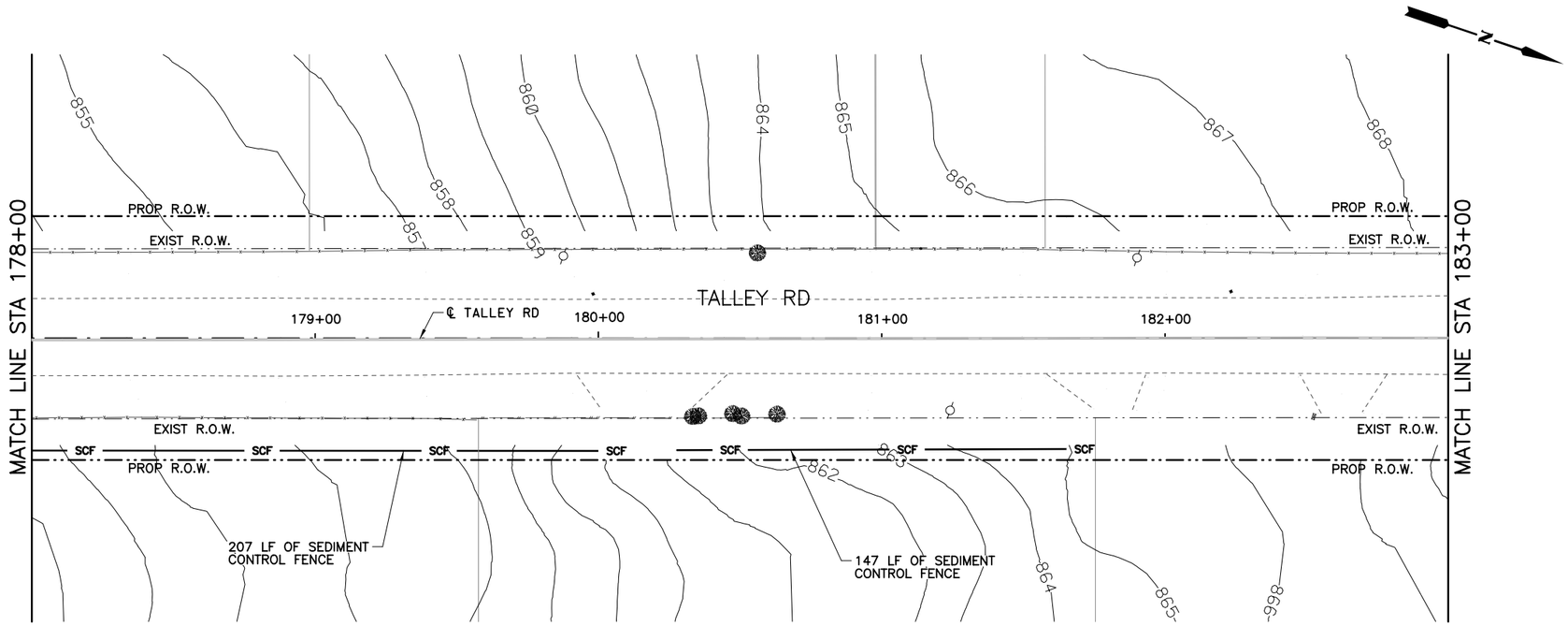

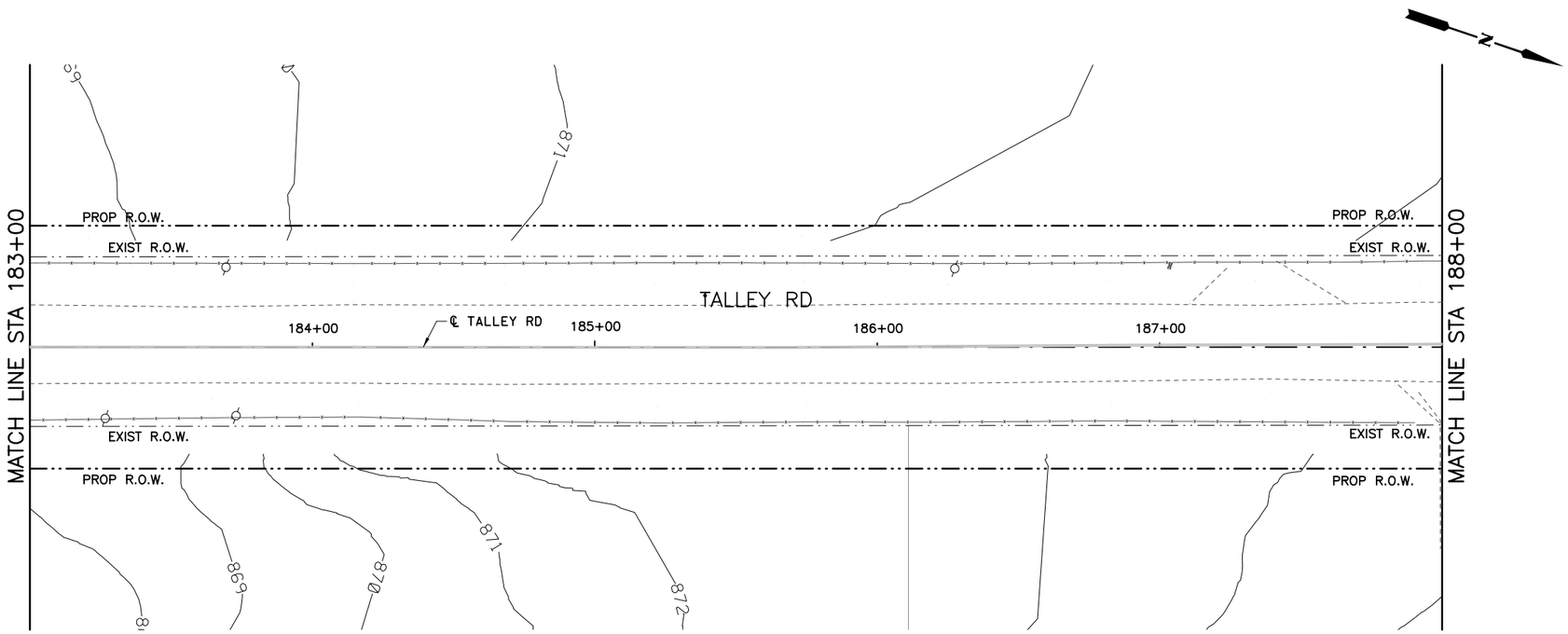

QUANTITY SUMMARY TALLEY RD.

TXDOT	ITEM	UNIT	QUANT
0506 6002	ROCK FILTER DAM (INSTALL)(TY 2)	LF	0
0506 6011	ROCK FILTER DAM (REMOVE)	LF	0
0506 6038	SEDIMENT CONTROL FENCE (INSTALL)	LF	354
0506 6039	SEDIMENT CONTROL FENCE (REMOVE)	LF	354
0506 6041	EROSION CONTROL LOG (INSTALL)	LF	0
0506 6043	EROSION CONTROL LOG (REMOVE)	LF	0

LEGEND

- SCF — SEDIMENT CONTROL FENCE
- RFD2 — ROCK FILTER DAM TY 2
- EROSION CONTROL LOG
- DITCH FLOW ARROWS
- TRAFFIC FLOW ARROWS
- EXISTING RIGHT-OF-WAY
- PROPOSED RIGHT-OF-WAY

HORIZ.
25 12.5 0 25 50
SCALE FEET

THIS DOCUMENT IS FOR INTERIM REVIEW AND IS NOT INTENDED FOR CONSTRUCTION, BIDDING, PERMIT OR OTHER UNAUTHORIZED PURPOSES. THESE DOCUMENTS/PLANS WERE AUTHORIZED TO BE RELEASED.

BY: BRYAN J. SPINA ,P.E.
LICENSE NO.: 103776 DATE: 2/21/2017

BEXAR COUNTY
PUBLIC WORKS DEPARTMENT

NO	DATE	DESCRIPTION	DWG	CHK

REVISIONS

CP&Y
T.B.P.E. FIRM # 1741

LNV
TBPE FIRM NO. F-366
TBPLS FIRM NO. 10126502
engineers | architects | surveyors
8918 TESORO DR., SUITE 401
SAN ANTONIO, TX 78217
PH. (210) 822-2232
FAX (210) 822-4032
WWW.LNVINC.COM

TALLEY ROAD
SW3P LAYOUT
PHASE 1
SHEET 9 OF 14

PROJECT NUMBER:		SHEET NO.
0849-01-046		507
DESIGNED BY: –	ROADWAY/HIGHWAY:	
CHECKED BY: –	TALLEY ROAD	
DRAWN BY: –	STATE	COUNTY
CHECKED BY: –	TEXAS	BEXAR

cpybw_ANSIB.tbl
cppdf_ANSIB.pltcfg
pw:/Active Projects/BEXA14048.01/8.00 Plans and Drawings/8.30 Cut Sheets/8.3.13 SW3P/14048SW3P09.dgn
2/21/2017 5:08:44 PM bspina

CP&Y
CHECKPRINT

REVIEWER
Initial:
Date:
VERIFIED
Initial:
Date:
PROCESSED
Initial:
Date:
VERIFIED
Initial:
Date:

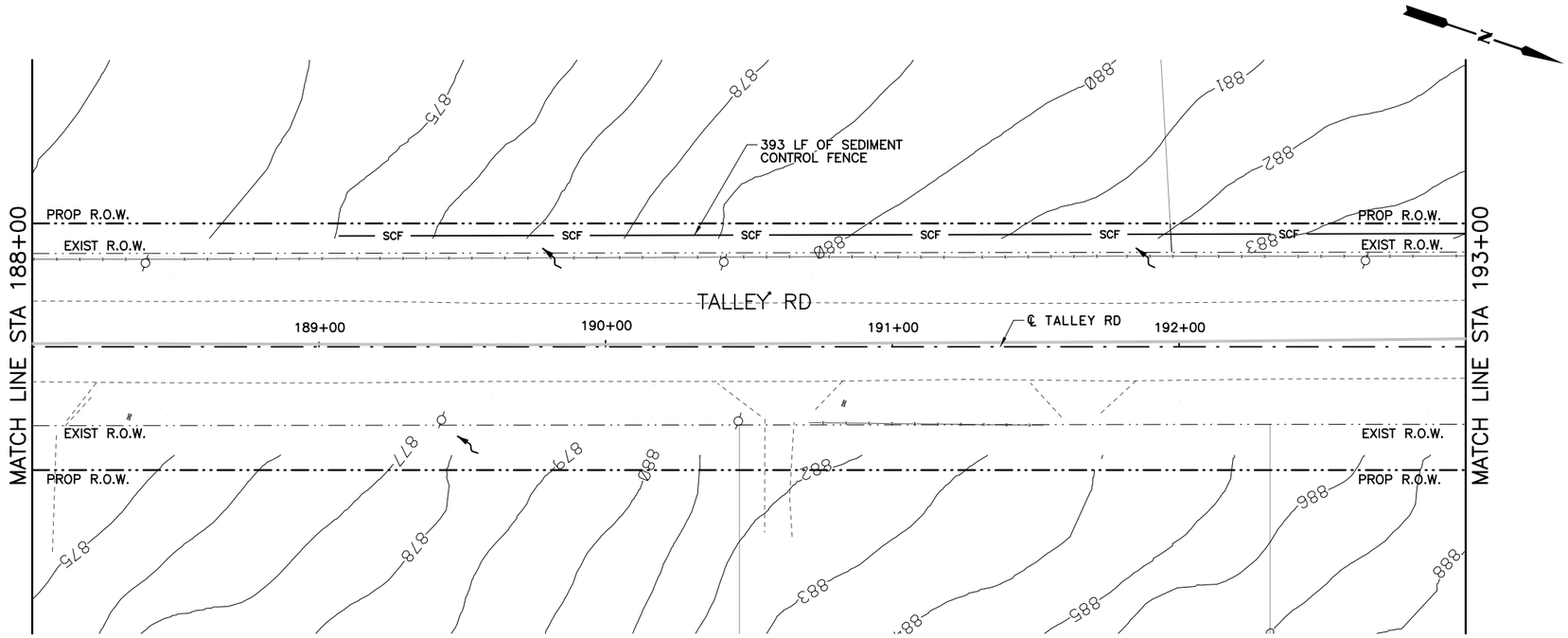

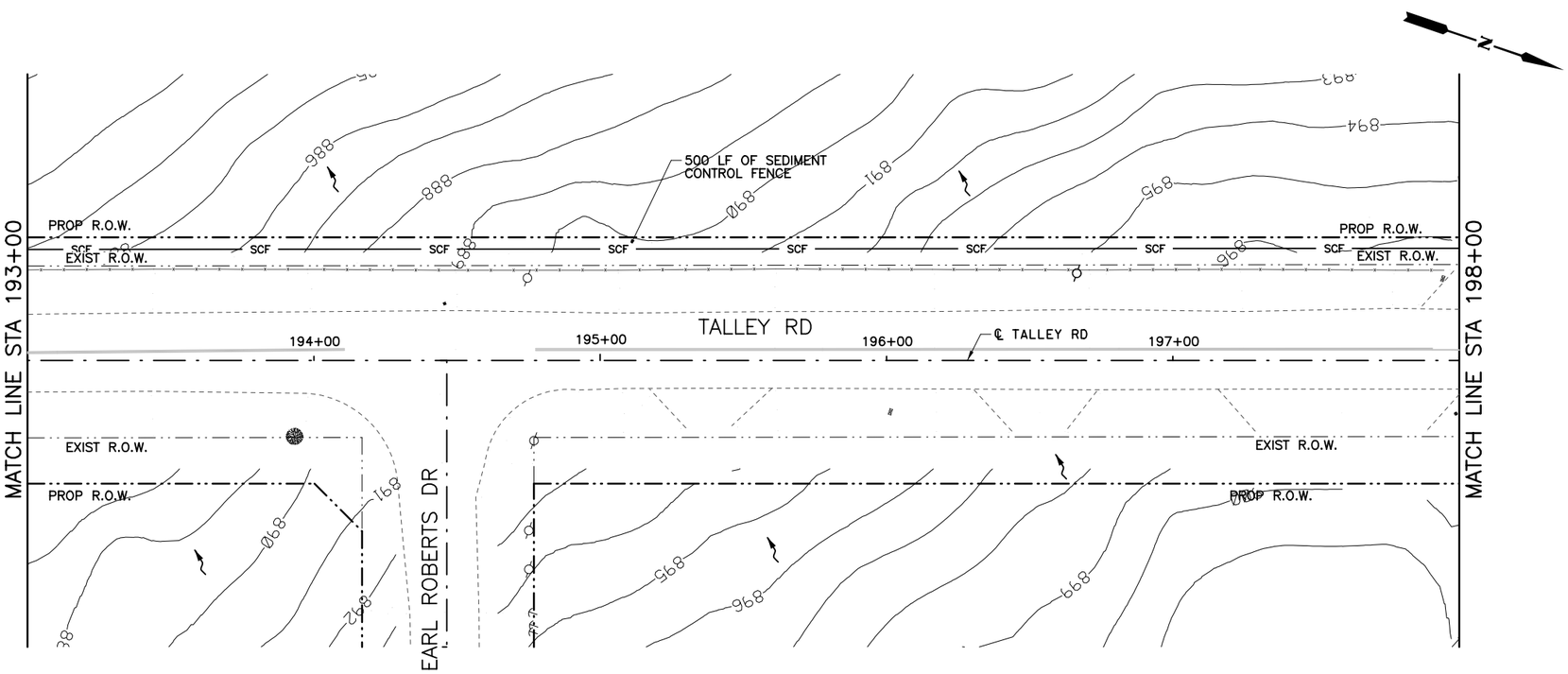

QUANTITY SUMMARY TALLEY RD.			
TXDOT	ITEM	UNIT	QUANT
0506 6002	ROCK FILTER DAM (INSTALL)(TY 2)	LF	0
0506 6011	ROCK FILTER DAM (REMOVE)	LF	0
0506 6038	SEDIMENT CONTROL FENCE (INSTALL)	LF	893
0506 6039	SEDIMENT CONTROL FENCE (REMOVE)	LF	893
0506 6041	EROSION CONTROL LOG (INSTALL)	LF	0
0506 6043	EROSION CONTROL LOG (REMOVE)	LF	0

LEGEND

- SCF — SEDIMENT CONTROL FENCE
- RFD2 — ROCK FILTER DAM TY 2
- EROSION CONTROL LOG
- DITCH FLOW ARROWS
- TRAFFIC FLOW ARROWS
- EXISTING RIGHT-OF-WAY
- PROPOSED RIGHT-OF-WAY

HORIZ.
25 12.5 0 25 50
SCALE FEET

THIS DOCUMENT IS FOR INTERIM REVIEW AND IS NOT INTENDED FOR CONSTRUCTION, BIDDING, PERMIT OR OTHER UNAUTHORIZED PURPOSES. THESE DOCUMENTS/PLANS WERE AUTHORIZED TO BE RELEASED.

BY: BRYAN J. SPINA ,P.E.
LICENSE NO.: 103776 DATE: 2/21/2017

BEXAR COUNTY
PUBLIC WORKS DEPARTMENT

NO	DATE	DESCRIPTION	DWG	CHK

REVISIONS

CP&Y
T.B.P.E. FIRM # 1741

LNV
TBPE FIRM NO. F-306
TBPLS FIRM NO. 10126502
engineers | architects | surveyors
8918 TESORO DR., SUITE 401
SAN ANTONIO, TX 78217
PH. (210) 822-2232
FAX (210) 822-4032
WWW.LNVINC.COM

TALLEY ROAD
SW3P LAYOUT
PHASE 1
SHEET 10 OF 14

PROJECT NUMBER:		SHEET NO.
0849-01-046		508
DESIGNED BY: –	ROADWAY/HIGHWAY:	
CHECKED BY: –	TALLEY ROAD	
DRAWN BY: –	STATE	COUNTY
CHECKED BY: –	TEXAS	BEXAR

cpybw_ANSIB.tbl
cppdf_ANSIB.pltcfg
pw:/Active Projects/BEXA14048.01/8.00 Plans and Drawings/8.30 Cut Sheets/8.3.13 SW3P/14048SW3P10.dgn
2/21/2017 5:08:53 PM bspina

CP&Y
CHECKPRINT

REVIEWER
Initial:
Date:
VERIFIED
Initial:
Date:
PROCESSED
Initial:
Date:
VERIFIED
Initial:
Date:

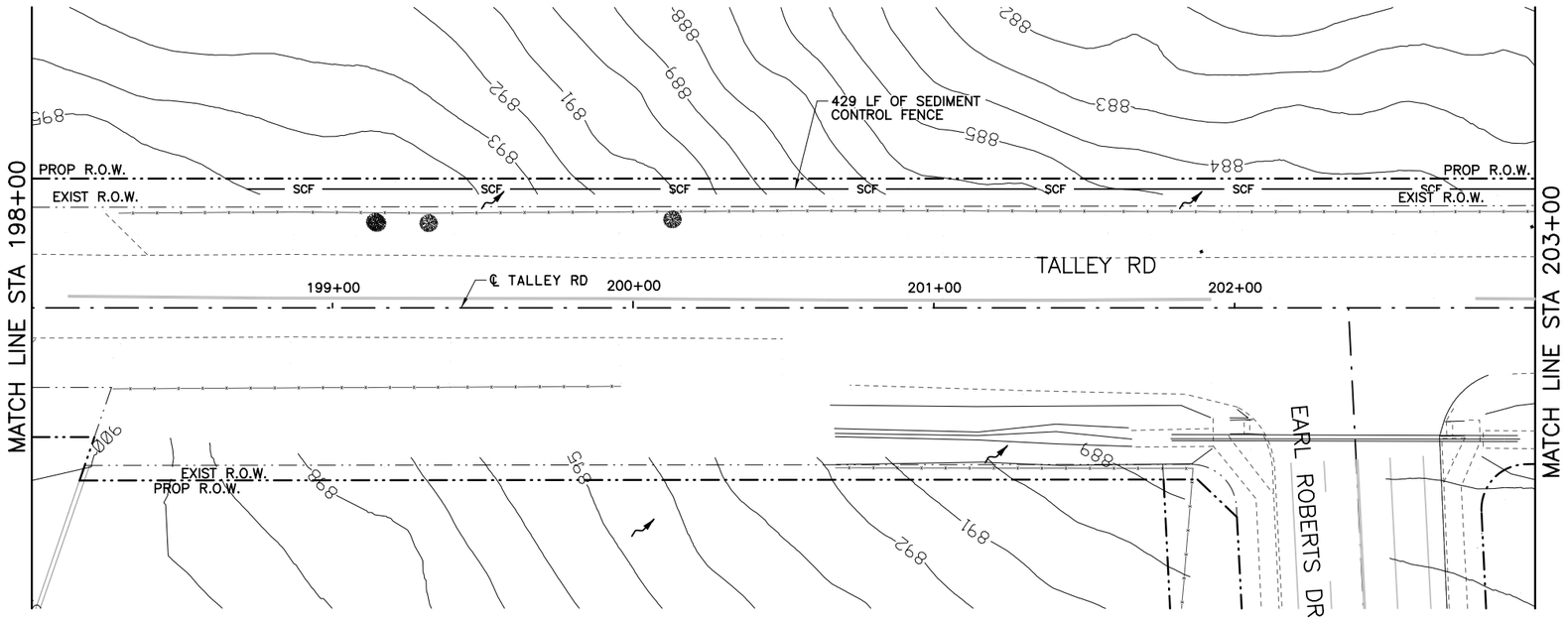

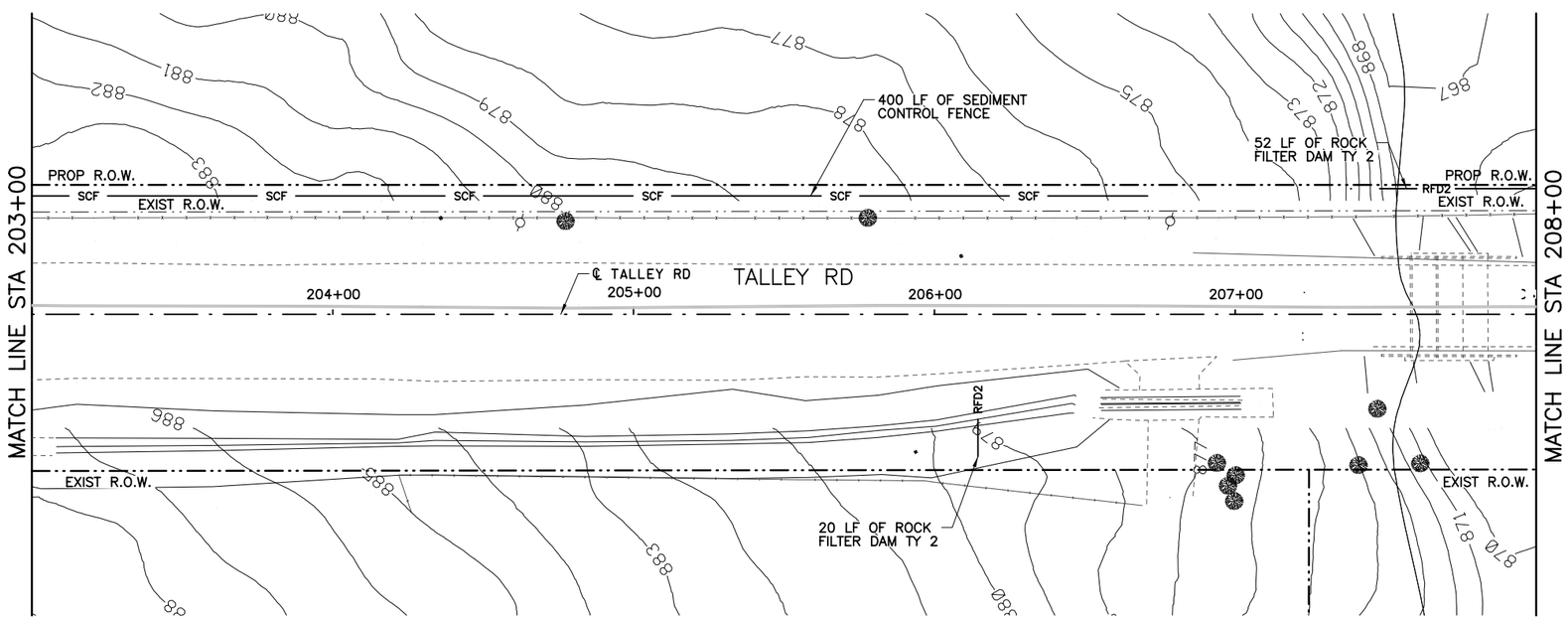

QUANTITY SUMMARY TALLEY RD.

TXDOT	ITEM	UNIT	QUANT
0506 6002	ROCK FILTER DAM (INSTALL)(TY 2)	LF	72
0506 6011	ROCK FILTER DAM (REMOVE)	LF	72
0506 6038	SEDIMENT CONTROL FENCE (INSTALL)	LF	829
0506 6039	SEDIMENT CONTROL FENCE (REMOVE)	LF	829
0506 6041	EROSION CONTROL LOG (INSTALL)	LF	0
0506 6043	EROSION CONTROL LOG (REMOVE)	LF	0

LEGEND

- SCF — SEDIMENT CONTROL FENCE
- RFD2 — ROCK FILTER DAM TY 2
- EROSION CONTROL LOG
- DITCH FLOW ARROWS
- TRAFFIC FLOW ARROWS
- EXISTING RIGHT-OF-WAY
- PROPOSED RIGHT-OF-WAY

HORIZ.
25 12.5 0 25 50
SCALE FEET

THIS DOCUMENT IS FOR INTERIM REVIEW AND IS NOT INTENDED FOR CONSTRUCTION, BIDDING, PERMIT OR OTHER UNAUTHORIZED PURPOSES. THESE DOCUMENTS/PLANS WERE AUTHORIZED TO BE RELEASED.

BY: BRYAN J. SPINA ,P.E.
LICENSE NO.: 103776 DATE: 2/21/2017

BEXAR COUNTY
PUBLIC WORKS DEPARTMENT

NO	DATE	DESCRIPTION	DWG	CHK

REVISIONS

CP&Y
T.B.P.E. FIRM # 1741

LNV
TBPE FIRM NO. F-366
TBPLS FIRM NO. 10126502
engineers | architects | surveyors
8918 TESORO DR., SUITE 401
SAN ANTONIO, TX 78217
WWW.LNVINC.COM
PH. (210) 822-2232
FAX (210) 822-4032

TALLEY ROAD
SW3P LAYOUT
PHASE 1
SHEET 11 OF 14

PROJECT NUMBER:		SHEET NO.
0849-01-046		509
DESIGNED BY: –	ROADWAY/HIGHWAY:	
CHECKED BY: –	TALLEY ROAD	
DRAWN BY: –	STATE	COUNTY
CHECKED BY: –	TEXAS	BEXAR

cpybw_ANSIB.tbl
cpypdf_ANSIB.pltcfg
pw:/Active Projects/BEXA14048.01/8.00 Plans and Drawings/8.30 Cut Sheets/8.3.13 SW3P/14048SW3P11.dgn
2/21/2017 5:09:03 PM bspina

CP&Y CHECKPRINT

REVIEWER
Initial:
Date:
VERIFIED
Initial:
Date:
PROCESSED
Initial:
Date:
VERIFIED
Initial:
Date:

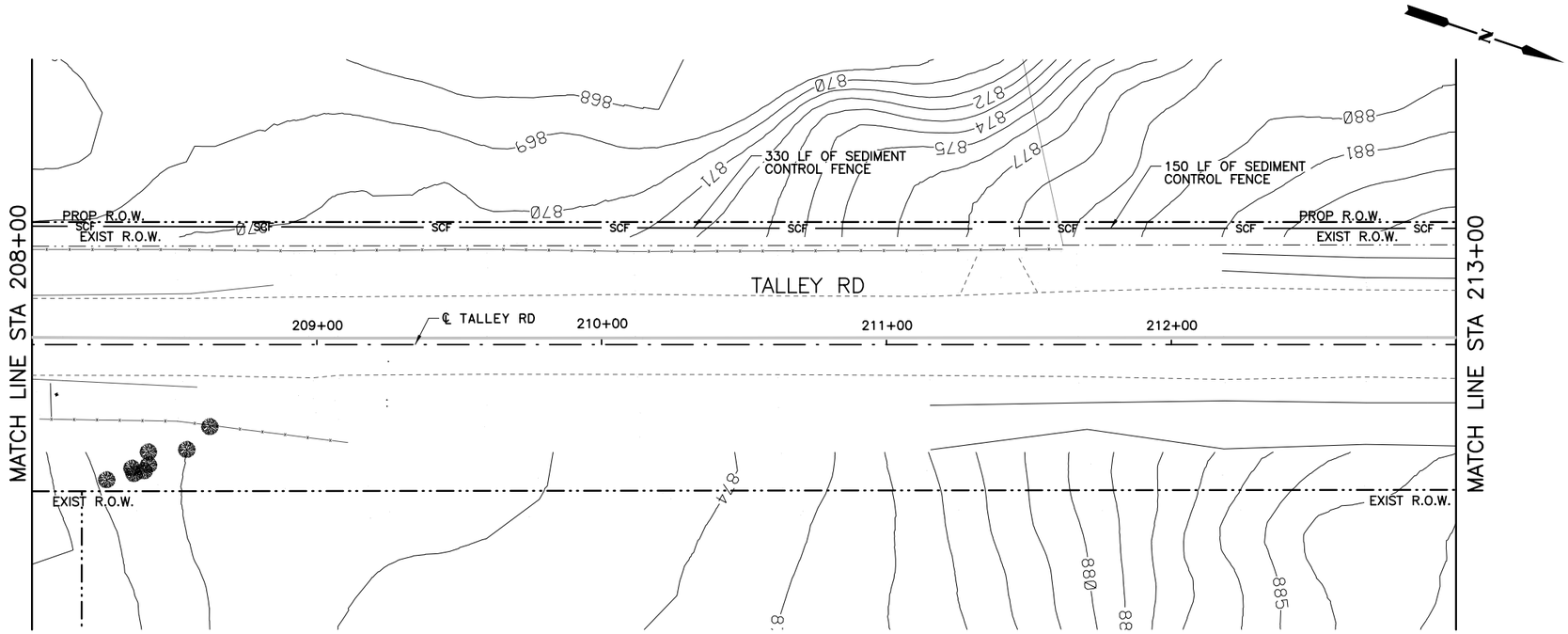

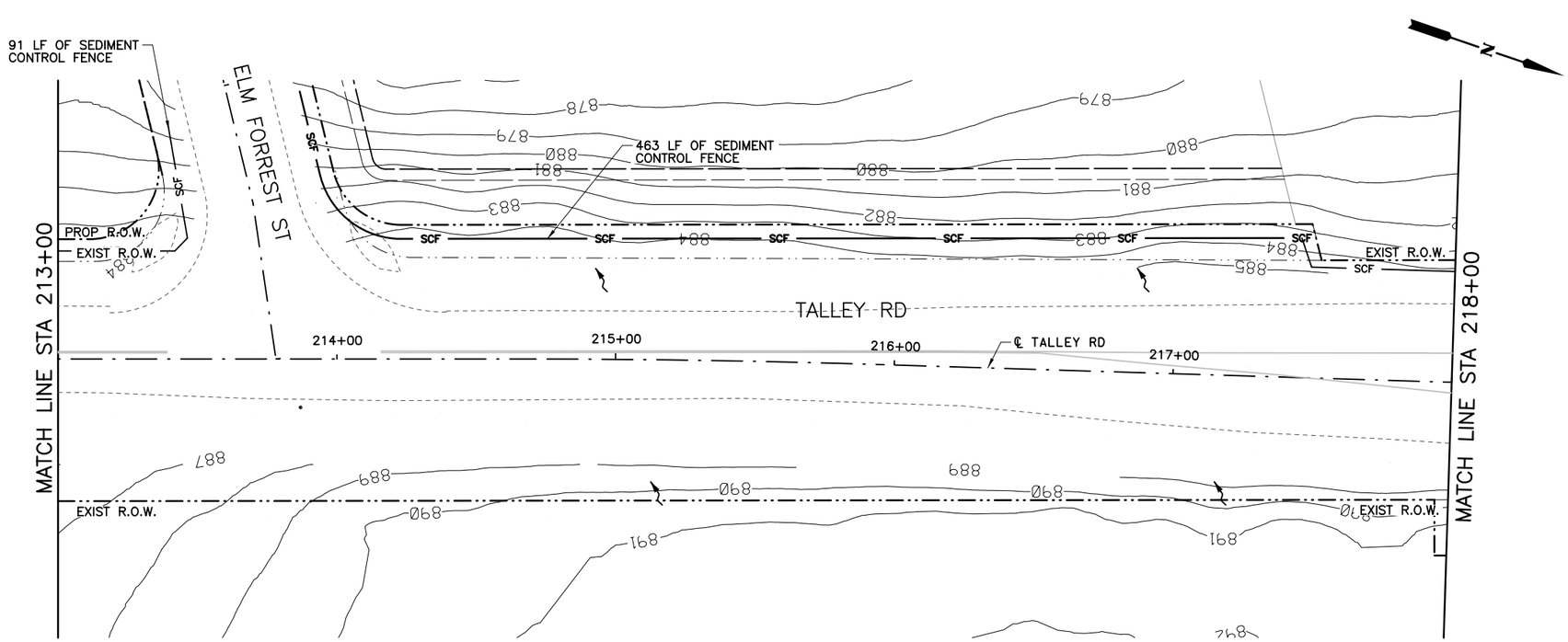

QUANTITY SUMMARY TALLEY RD.

TXDOT	ITEM	UNIT	QUANT
0506 6002	ROCK FILTER DAM (INSTALL)(TY 2)	LF	0
0506 6011	ROCK FILTER DAM (REMOVE)	LF	0
0506 6038	SEDIMENT CONTROL FENCE (INSTALL)	LF	1,034
0506 6039	SEDIMENT CONTROL FENCE (REMOVE)	LF	1,034
0506 6041	EROSION CONTROL LOG (INSTALL)	LF	0
0506 6043	EROSION CONTROL LOG (REMOVE)	LF	0

LEGEND

- SCF — SEDIMENT CONTROL FENCE
- RFD2 — ROCK FILTER DAM TY 2
- EROSION CONTROL LOG
- DITCH FLOW ARROWS
- TRAFFIC FLOW ARROWS
- EXISTING RIGHT-OF-WAY
- PROPOSED RIGHT-OF-WAY

HORIZ.

25 12.5 0 25 50

SCALE FEET

THIS DOCUMENT IS FOR INTERIM REVIEW AND IS NOT INTENDED FOR CONSTRUCTION, BIDDING, PERMIT OR OTHER UNAUTHORIZED PURPOSES. THESE DOCUMENTS/PLANS WERE AUTHORIZED TO BE RELEASED.

BY: BRYAN J. SPINA ,P.E.

LICENSE NO.: 103776 DATE: 2/21/2017

BEXAR COUNTY
PUBLIC WORKS DEPARTMENT

NO	DATE	DESCRIPTION	DWG	CHK

REVISIONS

CP&Y T.B.P.E. FIRM # 1741

LNV engineers | architects | surveyors
TBPE FIRM NO. F-306
TBPLS FIRM NO. 10126502
8918 TESORO DR., SUITE 401
SAN ANTONIO, TX 78217
PH. (210) 822-2232
FAX (210) 822-4032
WWW.LNVINC.COM

TALLEY ROAD

SW3P LAYOUT
PHASE 1
SHEET 12 OF 14

PROJECT NUMBER:		SHEET NO.
0849-01-046		510
DESIGNED BY: –	ROADWAY/HIGHWAY:	
CHECKED BY: –	TALLEY ROAD	
DRAWN BY: –	STATE	COUNTY
CHECKED BY: –	TEXAS	BEXAR

cpybw_ANSIB.tbl
cpypdf_ANSIB.pltcfg
pw:/Active Projects/BEXA14048.01/8.00 Plans and Drawings/8.30 Cut Sheets/8.3.13 SW3P/14048SW3P12.dgn
2/21/2017 5:09:20 PM bspina

CP&Y
CHECKPRINT

REVIEWER
Initial:
Date:
VERIFIED
Initial:
Date:
PROCESSED
Initial:
Date:
VERIFIED
Initial:
Date:

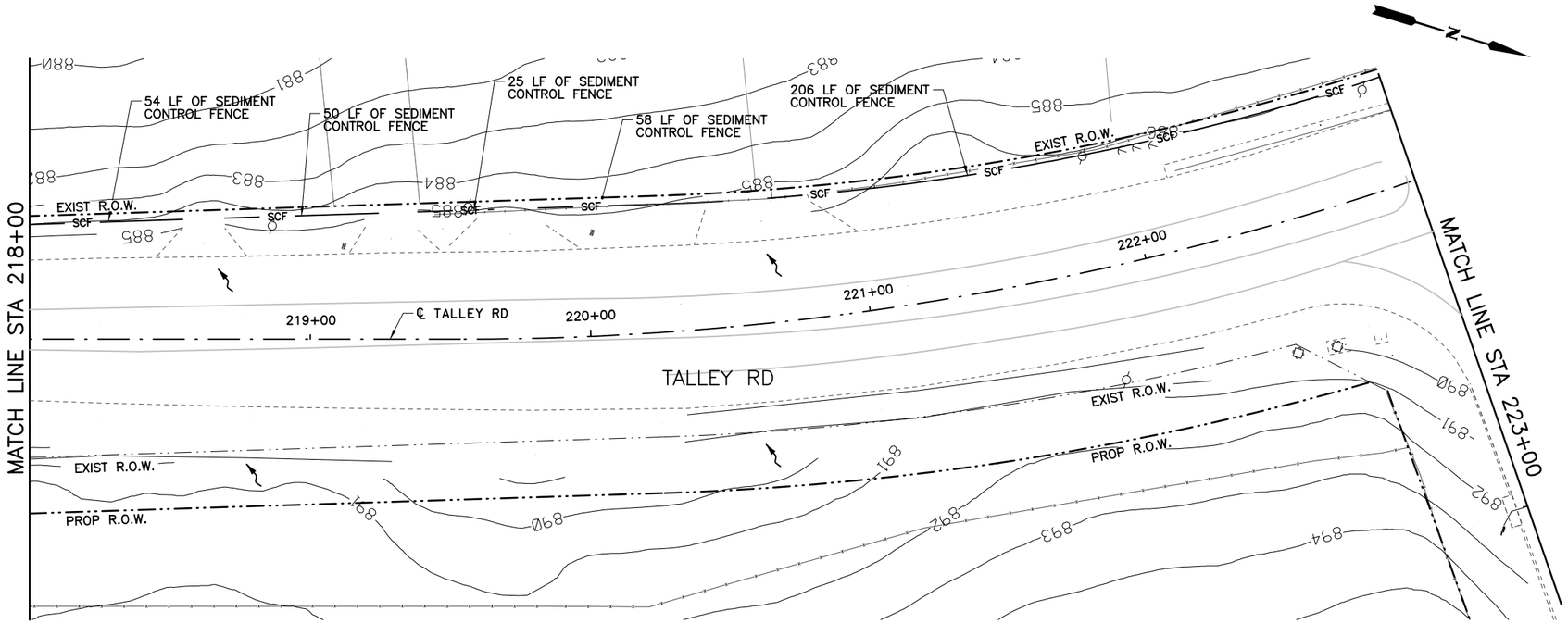

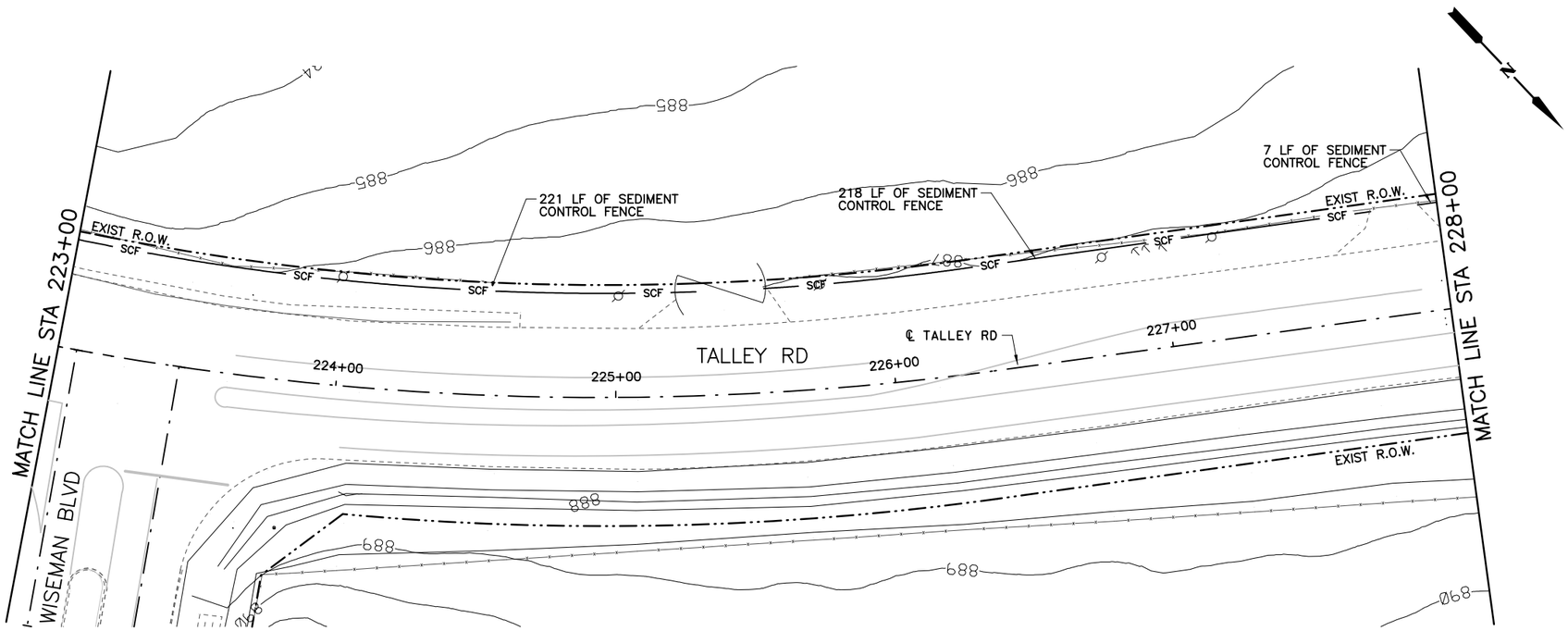

QUANTITY SUMMARY TALLEY RD.

0506 6002	ITEM	UNIT	QUANT
0506 6011	ROCK FILTER DAM (INSTALL)(TY 2)	LF	0
0506 6038	ROCK FILTER DAM (REMOVE)	LF	0
0506 6039	SEDIMENT CONTROL FENCE (INSTALL)	LF	839
0506 6041	SEDIMENT CONTROL FENCE (REMOVE)	LF	839
0506 6043	EROSION CONTROL LOG (INSTALL)	LF	0
0506 6043	EROSION CONTROL LOG (REMOVE)	LF	0

LEGEND

- SCF — SEDIMENT CONTROL FENCE
- RFD2 — ROCK FILTER DAM TY 2
- EROSION CONTROL LOG
- DITCH FLOW ARROWS
- TRAFFIC FLOW ARROWS
- EXISTING RIGHT-OF-WAY
- PROPOSED RIGHT-OF-WAY

HORIZ.
25 12.5 0 25 50
SCALE FEET

THIS DOCUMENT IS FOR INTERIM REVIEW AND IS NOT INTENDED FOR CONSTRUCTION, BIDDING, PERMIT OR OTHER UNAUTHORIZED PURPOSES. THESE DOCUMENTS/PLANS WERE AUTHORIZED TO BE RELEASED.

BY: BRYAN J. SPINA ,P.E.
LICENSE NO.: 103776 DATE: 2/21/2017

BEXAR COUNTY
PUBLIC WORKS DEPARTMENT

NO	DATE	DESCRIPTION	DWG	CHK

REVISIONS

CP&Y
T.B.P.E. FIRM # 1741

LNV
TBPE FIRM NO. F-366
TBPLS FIRM NO. 10126502
engineers | architects | surveyors
8918 TESORO DR., SUITE 401
SAN ANTONIO, TX 78217
WWW.LNVINC.COM
PH. (210) 822-2232
FAX (210) 822-4032

TALLEY ROAD
SW3P LAYOUT
PHASE 1
SHEET 13 OF 14

PROJECT NUMBER:		SHEET NO.
0849-01-046		511
DESIGNED BY: –	ROADWAY/HIGHWAY:	
CHECKED BY: –	TALLEY ROAD	
DRAWN BY: –	STATE	COUNTY
CHECKED BY: –	TEXAS	BEXAR

cpybw_ANSIB.tbl
cpypdf_ANSIB.pltcfg
pw:/Active Projects/BEXA14048.01/8.00 Plans and Drawings/8.30 Cut Sheets/8.3.13 SW3P/14048SW3P13.dgn
2/21/2017 5:09:29 PM bspina

CP&Y
CHECKPRINT

REVIEWER
Initial:
Date:
VERIFIED
Initial:
Date:
PROCESSED
Initial:
Date:
VERIFIED
Initial:
Date:

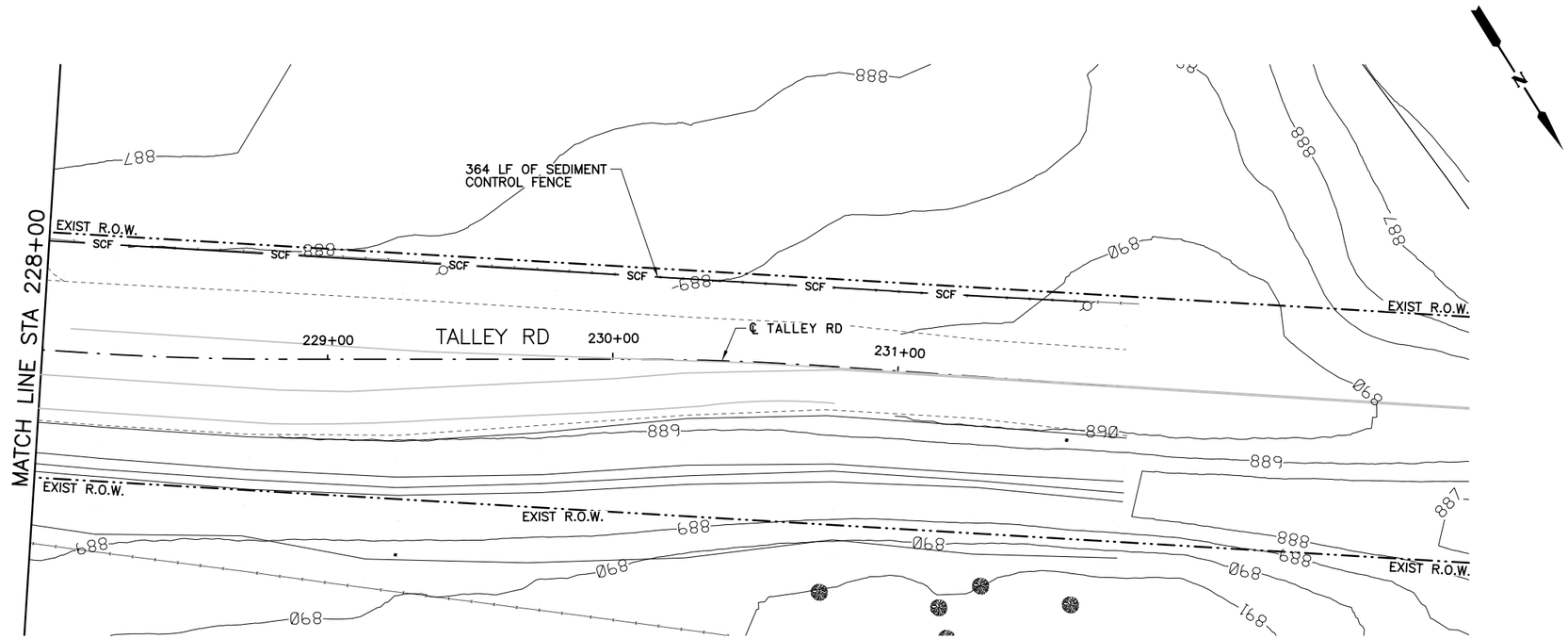

QUANTITY SUMMARY TALLEY RD.			
TXDOT	ITEM	UNIT	QUANT
0506 6002	ROCK FILTER DAM (INSTALL)(TY 2)	LF	0
0506 6011	ROCK FILTER DAM (REMOVE)	LF	0
0506 6038	SEDIMENT CONTROL FENCE (INSTALL)	LF	364
0506 6039	SEDIMENT CONTROL FENCE (REMOVE)	LF	364
0506 6041	EROSION CONTROL LOG (INSTALL)	LF	0
0506 6043	EROSION CONTROL LOG (REMOVE)	LF	0

LEGEND

- SCF — SEDIMENT CONTROL FENCE
- RFD2 — ROCK FILTER DAM TY 2
- EROSION CONTROL LOG
- DITCH FLOW ARROWS
- TRAFFIC FLOW ARROWS
- EXISTING RIGHT-OF-WAY
- PROPOSED RIGHT-OF-WAY

HORIZ.
25 12.5 0 25 50
SCALE FEET

THIS DOCUMENT IS FOR INTERIM REVIEW AND IS NOT INTENDED FOR CONSTRUCTION, BIDDING, PERMIT OR OTHER UNAUTHORIZED PURPOSES. THESE DOCUMENTS/PLANS WERE AUTHORIZED TO BE RELEASED.

BY: BRYAN J. SPINA ,P.E.
LICENSE NO.: 103776 DATE: 2/21/2017

BEXAR COUNTY
PUBLIC WORKS DEPARTMENT

NO	DATE	DESCRIPTION	DWG	CHK

REVISIONS

CP&Y
T.B.P.E. FIRM # 1741

LNV
engineers | architects | surveyors
8918 TESORO DR., SUITE 401
SAN ANTONIO, TX 78217 WWW.LNVINC.COM
TBPE FIRM NO. F-366
TBPLS FIRM NO. 10126502
PH. (210) 822-2232
FAX (210) 822-4032

TALLEY ROAD

SW3P LAYOUT
PHASE 1
SHEET 14 OF 14

PROJECT NUMBER:		SHEET NO.
0849-01-046		512
DESIGNED BY: –	ROADWAY/HIGHWAY:	
CHECKED BY: –	TALLEY ROAD	
DRAWN BY: –	STATE	COUNTY
CHECKED BY: –	TEXAS	BEXAR

cpybw_ANSIB.tbl
cpypdf_ANSIB.pltcfg
pw:/Active Projects/BEXA14048.01/8.00 Plans and Drawings/8.30 Cut Sheets/8.3.13 SW3P/14048SW3P14.dgn
2/21/2017 5:09:38 PM bspina

CP&Y
CHECKPRINT

REVIEWER
Initial:
Date:
VERIFIED
Initial:
Date:
PROCESSED
Initial:
Date:
VERIFIED
Initial:
Date:

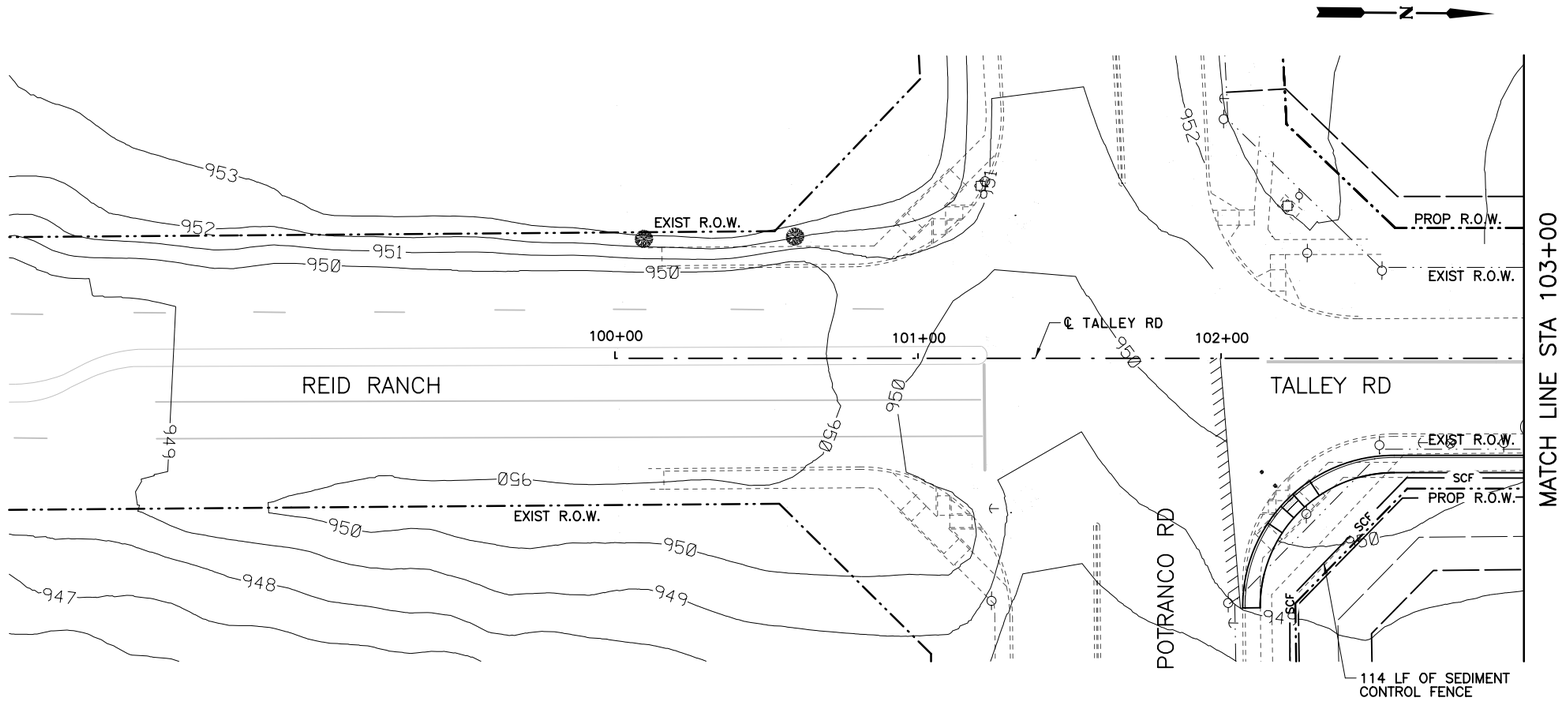

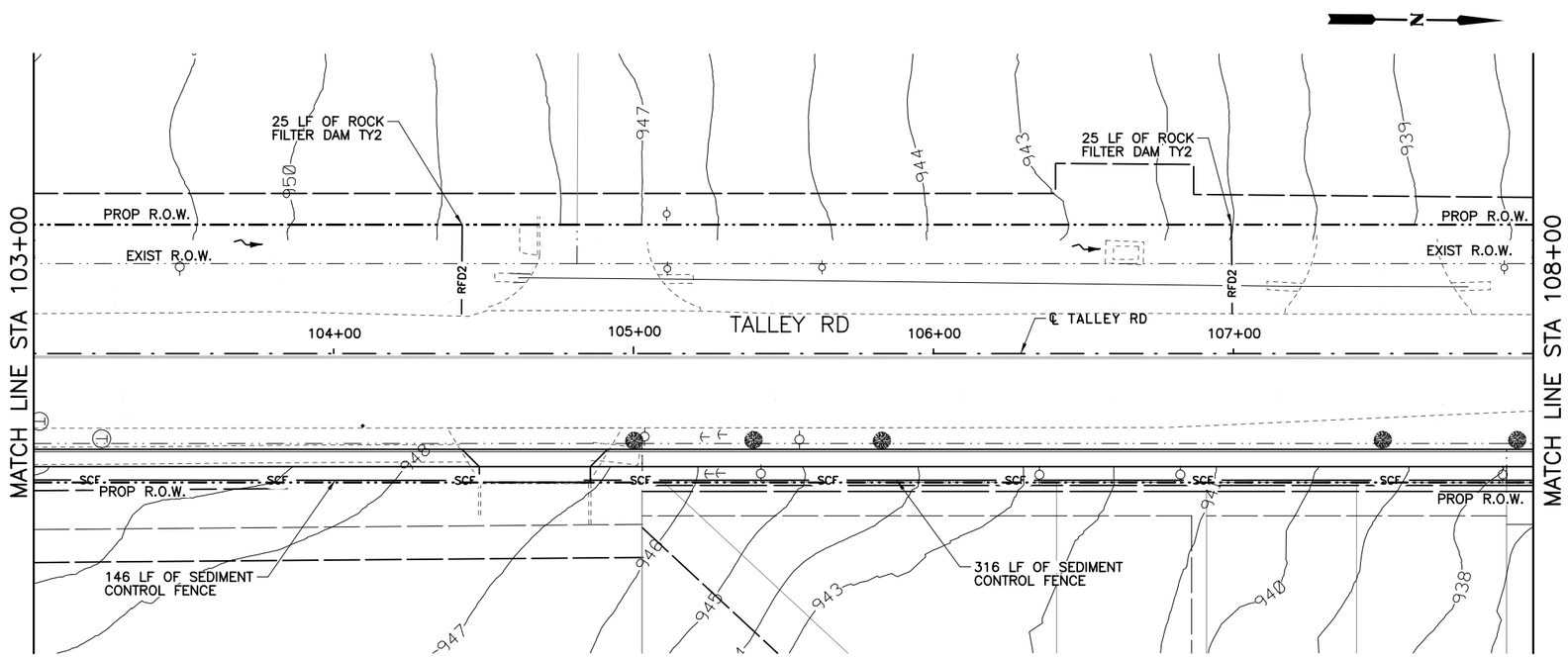

QUANTITY SUMMARY TALLEY RD.

TXDOT	ITEM	UNIT	QUANT
0506 6002	ROCK FILTER DAM (INSTALL)(TY 2)	LF	50
0506 6011	ROCK FILTER DAM (REMOVE)	LF	50
0506 6038	SEDIMENT CONTROL FENCE (INSTALL)	LF	576
0506 6039	SEDIMENT CONTROL FENCE (REMOVE)	LF	576
0506 6041	EROSION CONTROL LOG (INSTALL)	LF	0
0506 6043	EROSION CONTROL LOG (REMOVE)	LF	0

LEGEND

- SCF — SEDIMENT CONTROL FENCE
- RFD2 — ROCK FILTER DAM TY 2
- EROSION CONTROL LOG
- DITCH FLOW ARROWS
- TRAFFIC FLOW ARROWS
- EXISTING RIGHT-OF-WAY
- PROPOSED RIGHT-OF-WAY

HORIZ.
25 12.5 0 25 50
SCALE FEET

THIS DOCUMENT IS FOR INTERIM REVIEW AND IS NOT INTENDED FOR CONSTRUCTION, BIDDING, PERMIT OR OTHER UNAUTHORIZED PURPOSES. THESE DOCUMENTS/PLANS WERE AUTHORIZED TO BE RELEASED.

BY: BRYAN J. SPINA ,P.E.
LICENSE NO.: 103776 DATE: 2/21/2017

BEXAR COUNTY
PUBLIC WORKS DEPARTMENT

NO	DATE	DESCRIPTION	DWG	CHK

REVISIONS

CP&Y
T.B.P.E. FIRM # 1741
TBPE FIRM NO. F-366
TBPLS FIRM NO. 10126502

LNV
engineers | architects | surveyors
8918 TESORO DR., SUITE 401
SAN ANTONIO, TX 78217
WWW.LNVINC.COM
PH. (210) 822-2232
FAX (210) 822-4032

TALLEY ROAD
SW3P LAYOUT
PHASE 2
SHEET 1 OF 14

PROJECT NUMBER:		SHEET NO.
0849-01-046		513
DESIGNED BY: –	ROADWAY/HIGHWAY:	
CHECKED BY: –	TALLEY ROAD	
DRAWN BY: –	STATE	COUNTY
CHECKED BY: –	TEXAS	BEXAR

cpybw_ANSIB.tbl
cpypdf_ANSIB.pltcfg
pw:/Active Projects/BEXA14048.01/8.00 Plans and Drawings/8.30 Cut Sheets/8.3.13 SW3P/14048SW3P01_PH2.dgn
2/21/2017 5:09:46 PM bspina

CP&Y
CHECKPRINT

REVIEWER
Initial:
Date:
VERIFIED
Initial:
Date:
PROCESSED
Initial:
Date:
VERIFIED
Initial:
Date:

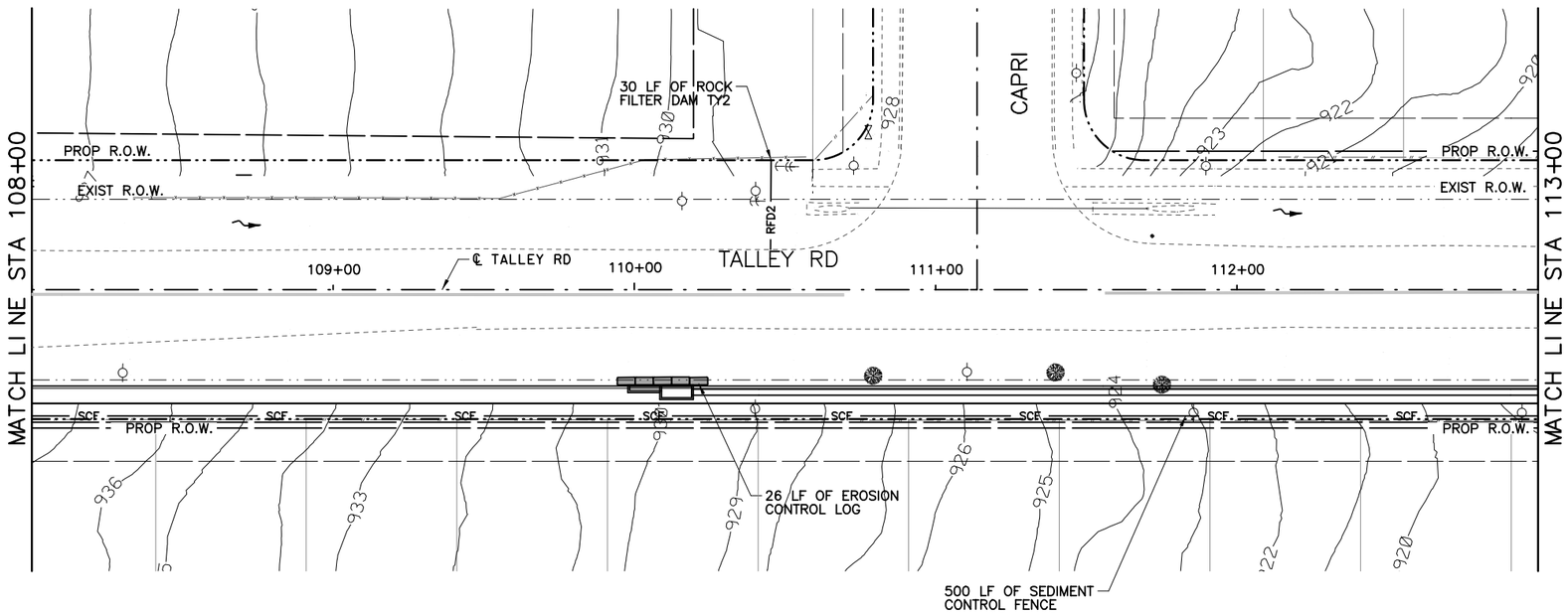

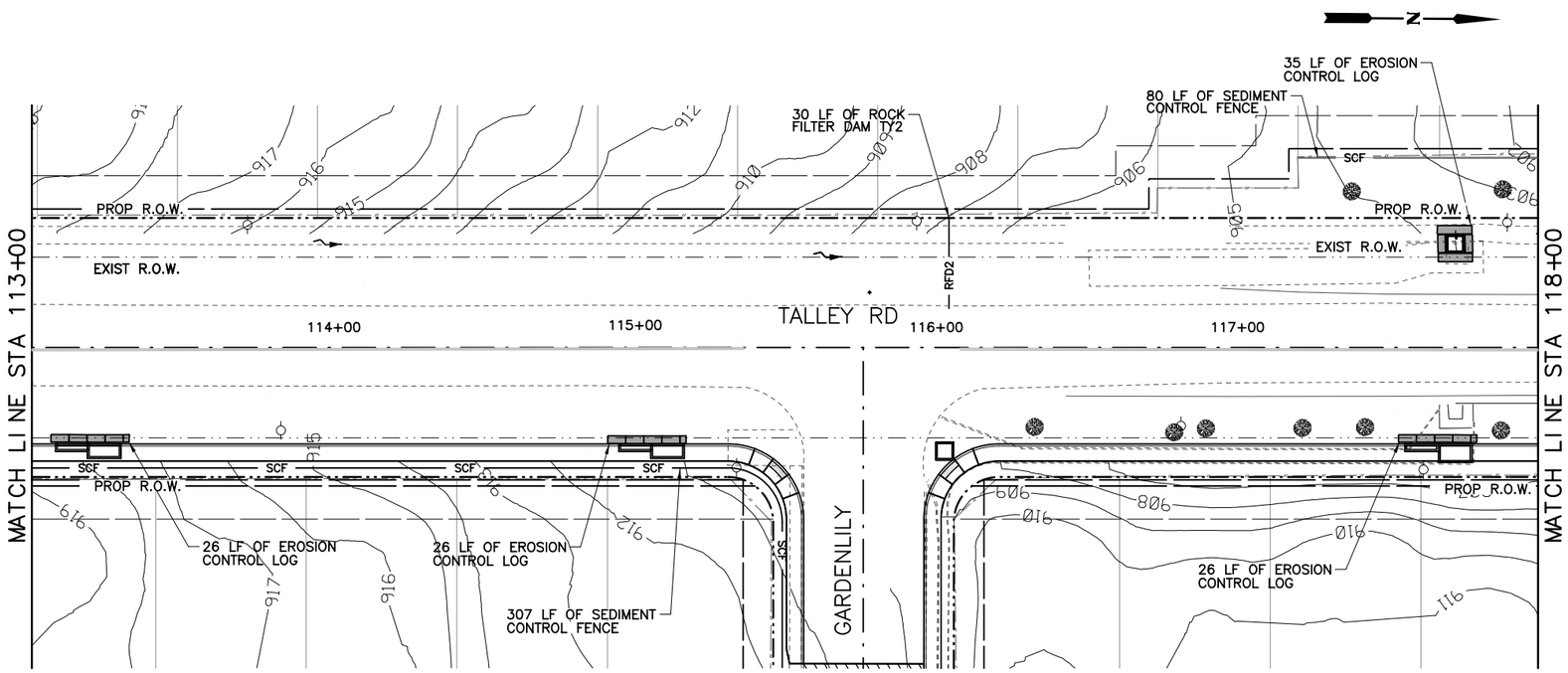

QUANTITY SUMMARY TALLEY RD.

TXDOT	ITEM	UNIT	QUANT
0506 6002	ROCK FILTER DAM (INSTALL)(TY 2)	LF	60
0506 6011	ROCK FILTER DAM (REMOVE)	LF	60
0506 6038	SEDIMENT CONTROL FENCE (INSTALL)	LF	887
0506 6039	SEDIMENT CONTROL FENCE (REMOVE)	LF	887
0506 6041	EROSION CONTROL LOG (INSTALL)	LF	139
0506 6043	EROSION CONTROL LOG (REMOVE)	LF	139

LEGEND

- SCF — SEDIMENT CONTROL FENCE
- RFD2 — ROCK FILTER DAM TY 2
- EROSION CONTROL LOG
- DITCH FLOW ARROWS
- TRAFFIC FLOW ARROWS
- EXISTING RIGHT-OF-WAY
- PROPOSED RIGHT-OF-WAY

HORIZ.
25 12.5 0 25 50
SCALE FEET

THIS DOCUMENT IS FOR INTERIM REVIEW AND IS NOT INTENDED FOR CONSTRUCTION, BIDDING, PERMIT OR OTHER UNAUTHORIZED PURPOSES. THESE DOCUMENTS/PLANS WERE AUTHORIZED TO BE RELEASED.

BY: BRYAN J. SPINA ,P.E.
LICENSE NO.: 103776 DATE: 2/21/2017

BEXAR COUNTY
PUBLIC WORKS DEPARTMENT

NO	DATE	DESCRIPTION	DWG	CHK

REVISIONS

CP&Y
T.B.P.E. FIRM # 1741

LNV
engineers | architects | surveyors
8918 TESORO DR., SUITE 401
SAN ANTONIO, TX 78217
WWW.LNVINC.COM
TBPE FIRM NO. F-306
TBPLS FIRM NO. 10126502
PH. (210) 822-2232
FAX (210) 822-4032

TALLEY ROAD
SW3P LAYOUT
PHASE 2
SHEET 2 OF 14

PROJECT NUMBER:	SHEET NO.
0849-01-046	514

DESIGNED BY:	–	ROADWAY/HIGHWAY:	
CHECKED BY:	–	TALLEY ROAD	
DRAWN BY:	–	STATE	COUNTY
CHECKED BY:	–	TEXAS	BEXAR

cpybw_ANSIB.tbl
cpypdf_ANSIB.pltcfg
pw:/Active Projects/BEXA14048.01/8.00 Plans and Drawings/8.30 Cut Sheets/8.3.13 SW3P/14048SW3P02_PH2.dgn
2/21/2017 5:09:54 PM bspina
pw:/Active Projects/BEXA14048.01/8.00 Plans and Drawings/8.30 Cut Sheets/8.3.13 SW3P/14048SW3P02_PH2.dgn

CP&Y
CHECKPRINT

REVIEWER
Initial:
Date:
VERIFIED
Initial:
Date:
PROCESSED
Initial:
Date:
VERIFIED
Initial:
Date:

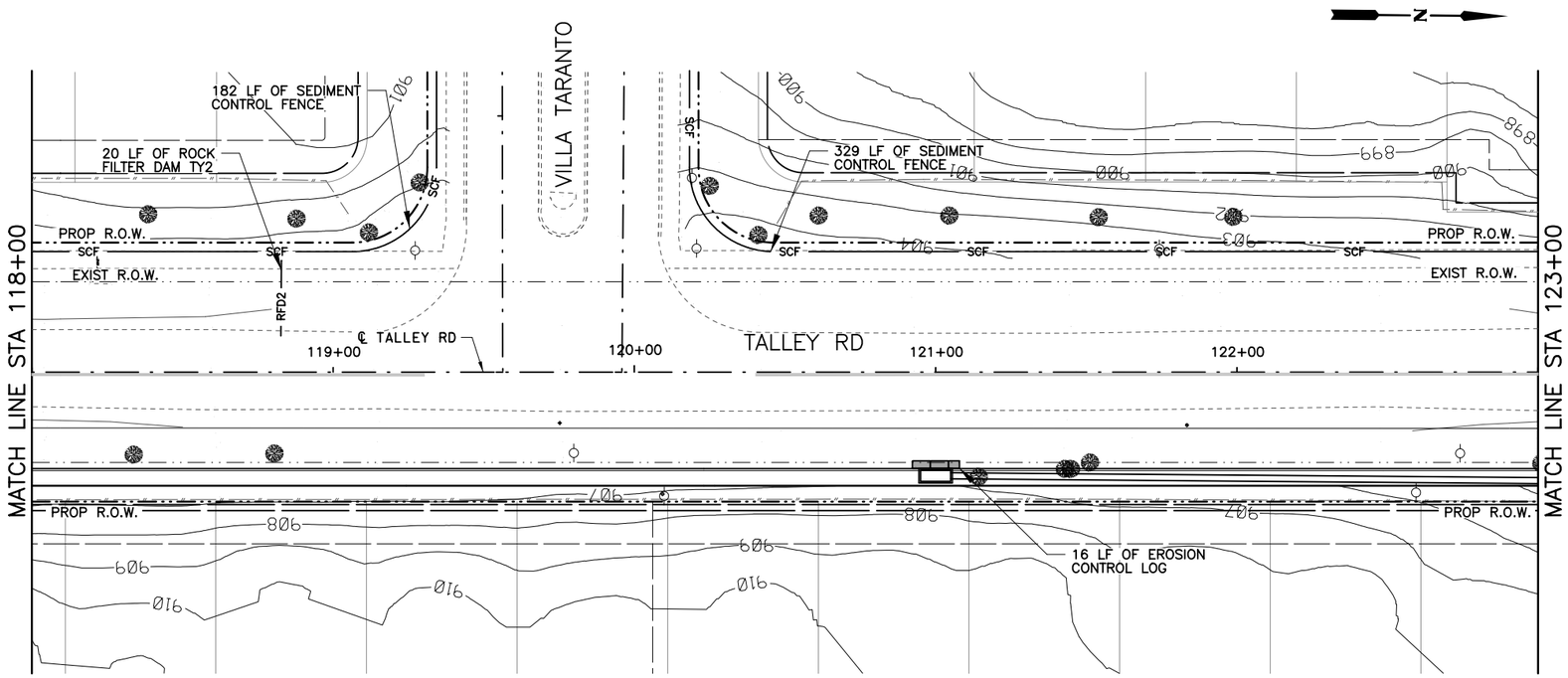

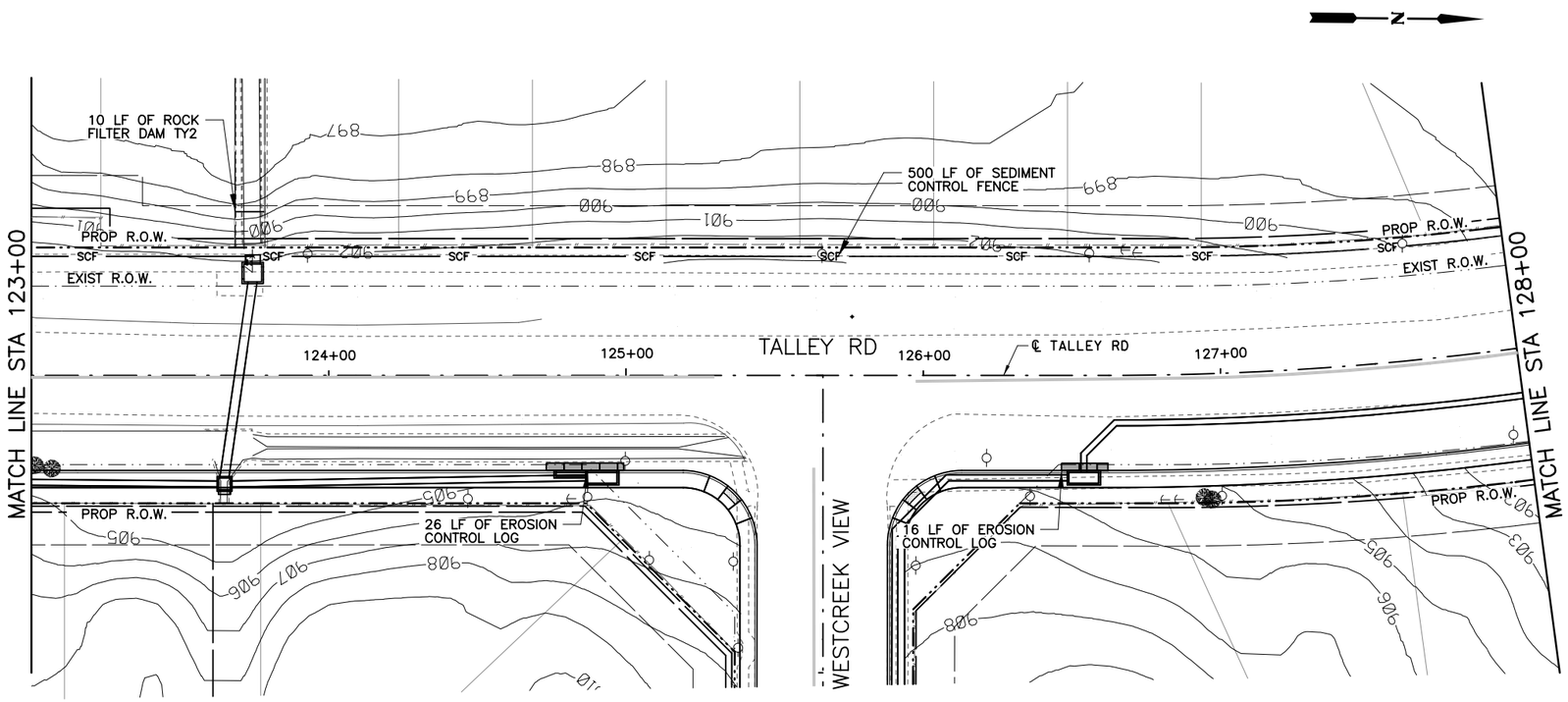

QUANTITY SUMMARY TALLEY RD.

TXDOT	ITEM	UNIT	QUANT
0506 6002	ROCK FILTER DAM (INSTALL)(TY 2)	LF	30
0506 6011	ROCK FILTER DAM (REMOVE)	LF	30
0506 6038	SEDIMENT CONTROL FENCE (INSTALL)	LF	1,011
0506 6039	SEDIMENT CONTROL FENCE (REMOVE)	LF	1,011
0506 6041	EROSION CONTROL LOG (INSTALL)	LF	58
0506 6043	EROSION CONTROL LOG (REMOVE)	LF	58

LEGEND

- SCF — SEDIMENT CONTROL FENCE
- RFD2 — ROCK FILTER DAM TY 2
- EROSION CONTROL LOG
- DITCH FLOW ARROWS
- TRAFFIC FLOW ARROWS
- EXISTING RIGHT-OF-WAY
- PROPOSED RIGHT-OF-WAY

HORIZ.
25 12.5 0 25 50
SCALE FEET

THIS DOCUMENT IS FOR INTERIM REVIEW AND IS NOT INTENDED FOR CONSTRUCTION, BIDDING, PERMIT OR OTHER UNAUTHORIZED PURPOSES. THESE DOCUMENTS/PLANS WERE AUTHORIZED TO BE RELEASED.

BY: BRYAN J. SPINA ,P.E.
LICENSE NO.: 103776 DATE: 2/21/2017

BEXAR COUNTY
PUBLIC WORKS DEPARTMENT

NO	DATE	DESCRIPTION	DWG	CHK

REVISIONS

CP&Y
T.B.P.E. FIRM # 1741

LNV
TBPE FIRM NO. F-306
TBPLS FIRM NO. 10126502
engineers | architects | surveyors
8918 TESORO DR., SUITE 401
SAN ANTONIO, TX 78217
WWW.LNVINC.COM
PH. (210) 822-2232
FAX (210) 822-4032

TALLEY ROAD
SW3P LAYOUT
PHASE 2
SHEET 3 OF 14

PROJECT NUMBER:		SHEET NO.
0849-01-046		515
DESIGNED BY: –	ROADWAY/HIGHWAY:	
CHECKED BY: –	TALLEY ROAD	
DRAWN BY: –	STATE	COUNTY
CHECKED BY: –	TEXAS	BEXAR

cpybw_ANSIB.tbl
cpypdf_ANSIB.pltcfg
pw:/Active Projects/BEXA14048.01/8.00 Plans and Drawings/8.30 Cut Sheets/8.3.13 SW3P/14048SW3P03_PH2.dgn
2/21/2017 5:10:05 PM bspina

CP&Y
CHECKPRINT

REVIEWER
Initial:
Date:
VERIFIED
Initial:
Date:
PROCESSED
Initial:
Date:
VERIFIED
Initial:
Date:

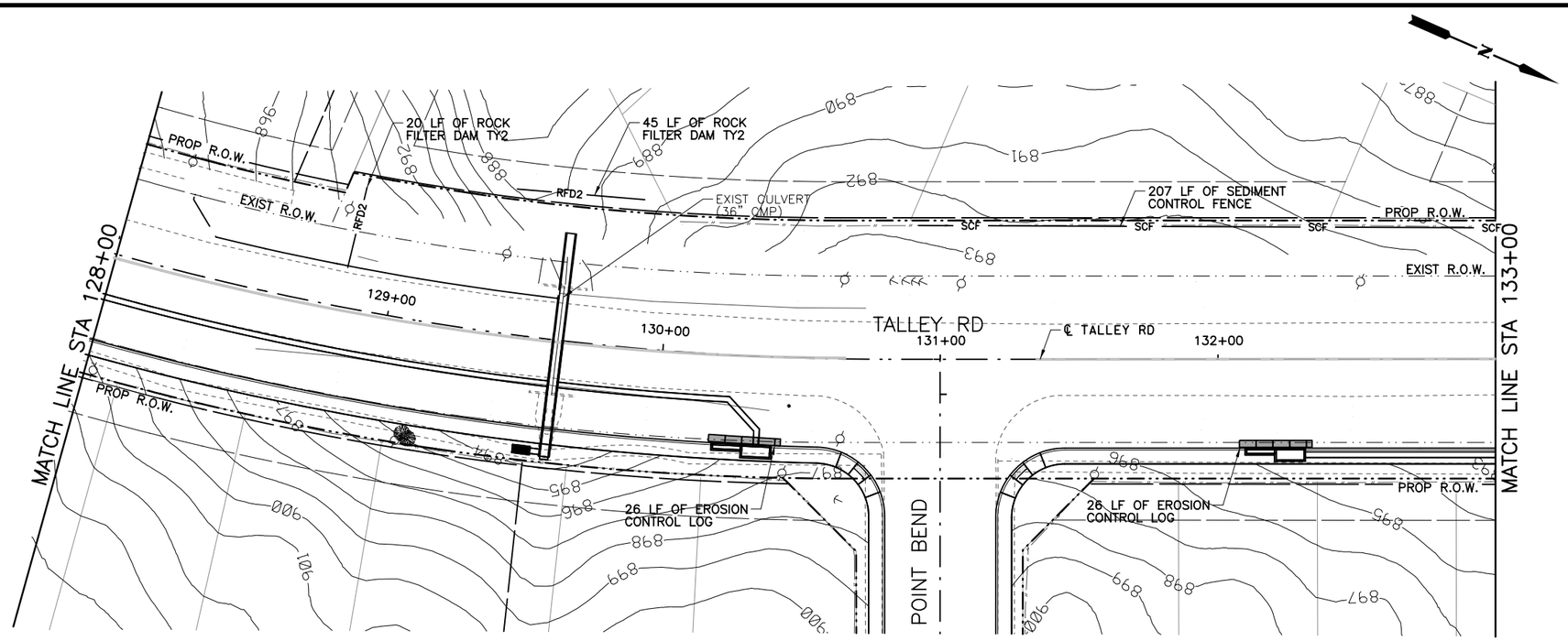

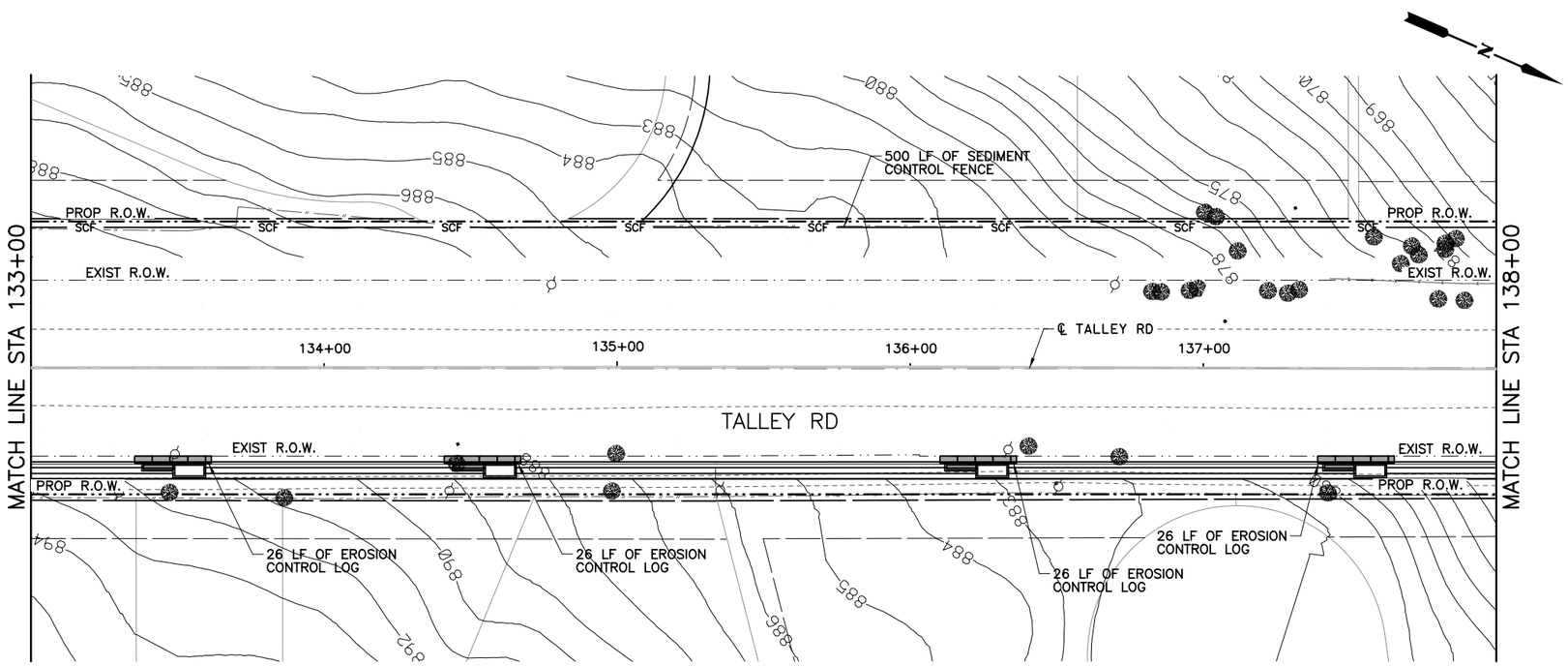

QUANTITY SUMMARY TALLEY RD.

TXDOT	ITEM	UNIT	QUANT
0506 6002	ROCK FILTER DAM (INSTALL)(TY 2)	LF	65
0506 6011	ROCK FILTER DAM (REMOVE)	LF	65
0506 6038	SEDIMENT CONTROL FENCE (INSTALL)	LF	707
0506 6039	SEDIMENT CONTROL FENCE (REMOVE)	LF	707
0506 6041	EROSION CONTROL LOG (INSTALL)	LF	128
0506 6043	EROSION CONTROL LOG (REMOVE)	LF	128

LEGEND

- SCF — SEDIMENT CONTROL FENCE
- RFD2 — ROCK FILTER DAM TY 2
- EROSION CONTROL LOG
- DITCH FLOW ARROWS
- TRAFFIC FLOW ARROWS
- EXISTING RIGHT-OF-WAY
- PROPOSED RIGHT-OF-WAY

HORIZ.
25 12.5 0 25 50
SCALE FEET

THIS DOCUMENT IS FOR INTERIM REVIEW AND IS NOT INTENDED FOR CONSTRUCTION, BIDDING, PERMIT OR OTHER UNAUTHORIZED PURPOSES. THESE DOCUMENTS/PLANS WERE AUTHORIZED TO BE RELEASED.

BY: BRYAN J. SPINA ,P.E.
LICENSE NO.: 103776 DATE: 2/21/2017

BEXAR COUNTY
PUBLIC WORKS DEPARTMENT

NO	DATE	DESCRIPTION	DWG	CHK

REVISIONS

CP&Y
T.B.P.E. FIRM # 1741

LNV
TBPE FIRM NO. F-266
TBPLS FIRM NO. 10126502
engineers | architects | surveyors
8918 TESORO DR., SUITE 401
SAN ANTONIO, TX 78217
PH. (210) 822-2232
FAX (210) 822-4032
WWW.LNVINC.COM

TALLEY ROAD
SW3P LAYOUT
PHASE 2
SHEET 4 OF 14

PROJECT NUMBER:	SHEET NO.
0849-01-046	516

DESIGNED BY:	–	ROADWAY/HIGHWAY:	
CHECKED BY:	–	TALLEY ROAD	
DRAWN BY:	–	STATE	COUNTY
CHECKED BY:	–	TEXAS	BEXAR

cpybw_ANSIB.tbl
cpypdf_ANSIB.pltcfg
pw:/Active Projects/BEXA14048.01/8.00 Plans and Drawings/8.30 Cut Sheets/8.3.13 SW3P/14048SW3P04_PH2.dgn
2/21/2017 5:10:15 PM bspina

CP&Y
CHECKPRINT

REVIEWER
Initial:
Date:
VERIFIED
Initial:
Date:
PROCESSED
Initial:
Date:
VERIFIED
Initial:
Date:

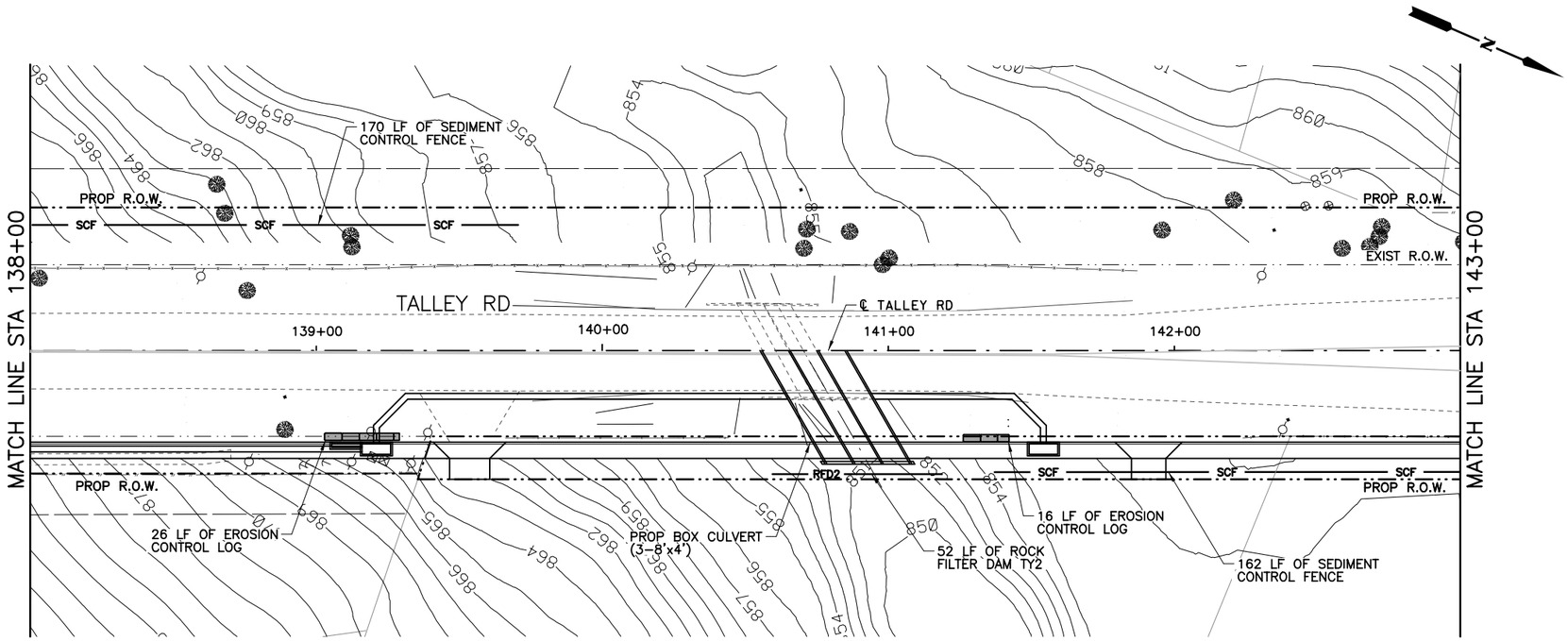

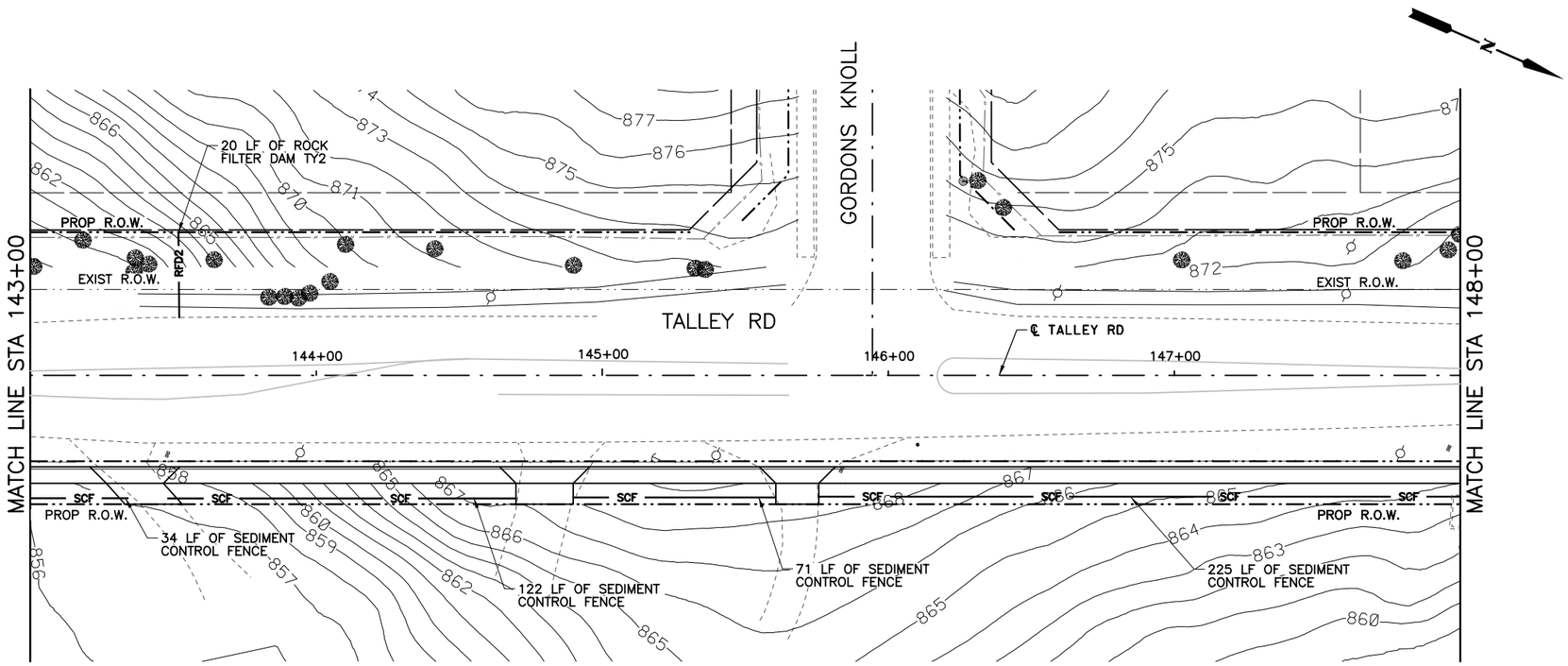

QUANTITY SUMMARY TALLEY RD.

TXDOT	ITEM	UNIT	QUANT
0506 6002	ROCK FILTER DAM (INSTALL)(TY 2)	LF	80
0506 6011	ROCK FILTER DAM (REMOVE)	LF	80
0506 6038	SEDIMENT CONTROL FENCE (INSTALL)	LF	784
0506 6039	SEDIMENT CONTROL FENCE (REMOVE)	LF	784
0506 6041	EROSION CONTROL LOG (INSTALL)	LF	0
0506 6043	EROSION CONTROL LOG (REMOVE)	LF	0

LEGEND

- SCF — SEDIMENT CONTROL FENCE
- RFD2 — ROCK FILTER DAM TY 2
- EROSION CONTROL LOG
- DITCH FLOW ARROWS
- TRAFFIC FLOW ARROWS
- EXISTING RIGHT-OF-WAY
- PROPOSED RIGHT-OF-WAY

HORIZ.
25 12.5 0 25 50
SCALE FEET

THIS DOCUMENT IS FOR INTERIM REVIEW AND IS NOT INTENDED FOR CONSTRUCTION, BIDDING, PERMIT OR OTHER UNAUTHORIZED PURPOSES. THESE DOCUMENTS/PLANS WERE AUTHORIZED TO BE RELEASED.

BY: BRYAN J. SPINA ,P.E.
LICENSE NO.: 103776 DATE: 2/21/2017

BEXAR COUNTY
PUBLIC WORKS DEPARTMENT

NO	DATE	DESCRIPTION	DWG	CHK

REVISIONS

CP&Y
T.B.P.E. FIRM # 1741

LNV
TBPE FIRM NO. F-366
TBPLS FIRM NO. 10126502
engineers | architects | surveyors
8918 TESORO DR., SUITE 401
SAN ANTONIO, TX 78217
PH. (210) 822-2232
FAX (210) 822-4032
WWW.LNVINC.COM

TALLEY ROAD
SW3P LAYOUT
PHASE 2
SHEET 5 OF 14

PROJECT NUMBER:		SHEET NO.
0849-01-046		517
DESIGNED BY: –	ROADWAY/HIGHWAY:	
CHECKED BY: –	TALLEY ROAD	
DRAWN BY: –	STATE	COUNTY
CHECKED BY: –	TEXAS	BEXAR

cpybw_ANSIB.tbl
cpypdf_ANSIB.pltcfg
pw:/Active Projects/BEXA14048.01/8.00 Plans and Drawings/8.30 Cut Sheets/8.3.13 SW3P/14048SW3P05_PH2.dgn
2/21/2017 5:10:25 PM bspina

CP&Y
CHECKPRINT

REVIEWER
Initial:
Date:
VERIFIED
Initial:
Date:
PROCESSED
Initial:
Date:
VERIFIED
Initial:
Date:

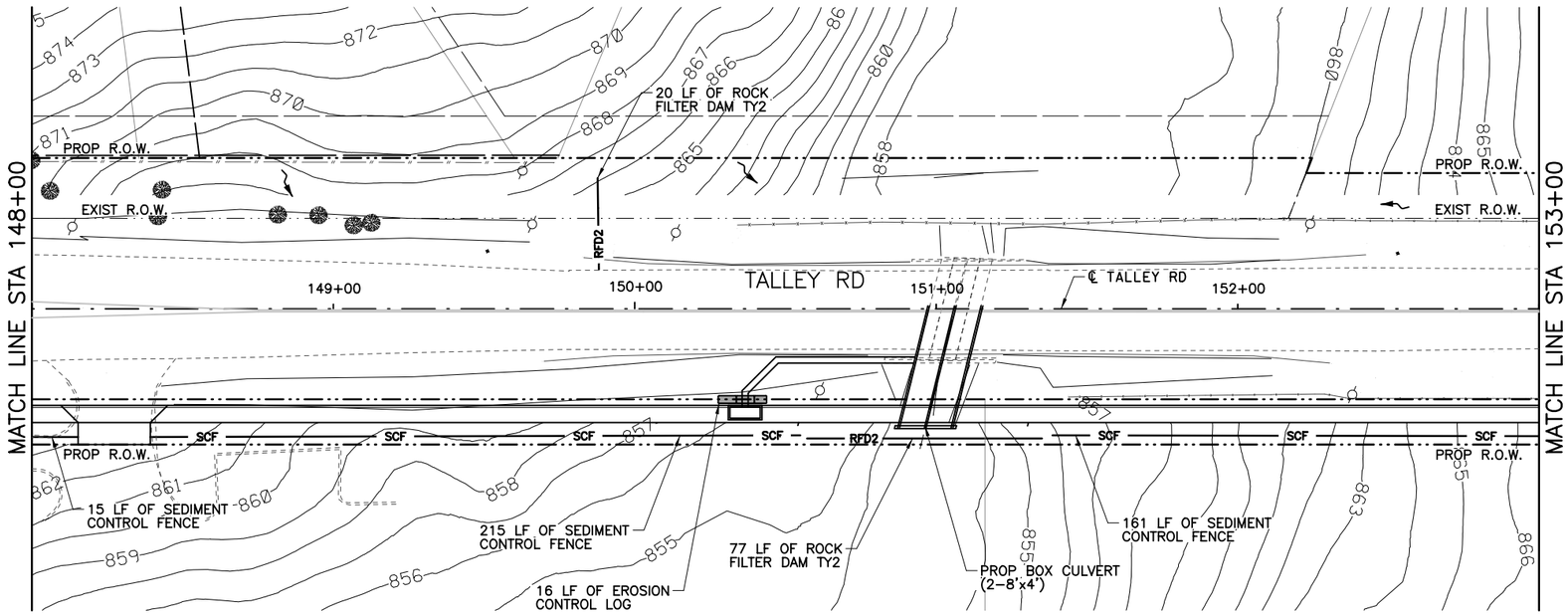

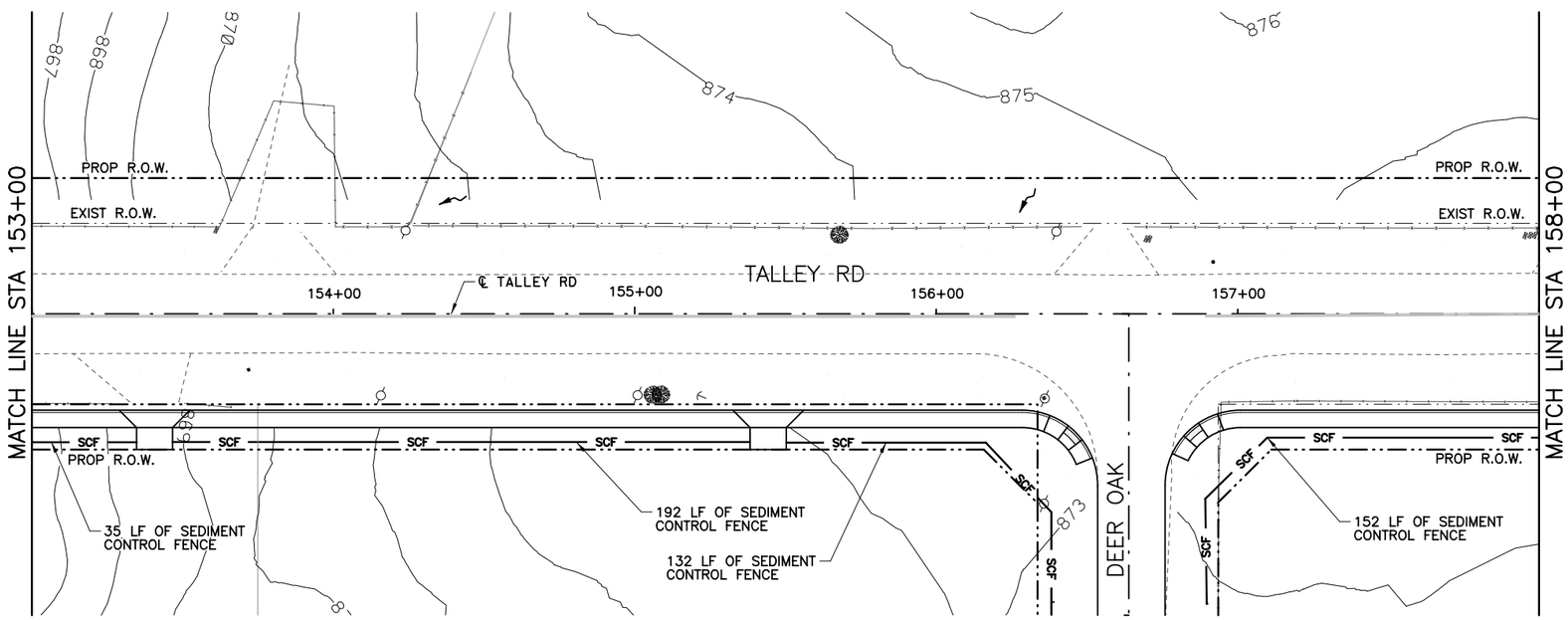

QUANTITY SUMMARY TALLEY RD.

TXDOT	ITEM	UNIT	QUANT
0506 6002	ROCK FILTER DAM (INSTALL)(TY 2)	LF	97
0506 6011	ROCK FILTER DAM (REMOVE)	LF	97
0506 6038	SEDIMENT CONTROL FENCE (INSTALL)	LF	902
0506 6039	SEDIMENT CONTROL FENCE (REMOVE)	LF	902
0506 6041	EROSION CONTROL LOG (INSTALL)	LF	16
0506 6043	EROSION CONTROL LOG (REMOVE)	LF	16

LEGEND

- SCF — SEDIMENT CONTROL FENCE
- RFD2 — ROCK FILTER DAM TY 2
- EROSION CONTROL LOG
- DITCH FLOW ARROWS
- TRAFFIC FLOW ARROWS
- EXISTING RIGHT-OF-WAY
- PROPOSED RIGHT-OF-WAY

HORIZ.
25 12.5 0 25 50
SCALE FEET

THIS DOCUMENT IS FOR INTERIM REVIEW AND IS NOT INTENDED FOR CONSTRUCTION, BIDDING, PERMIT OR OTHER UNAUTHORIZED PURPOSES. THESE DOCUMENTS/PLANS WERE AUTHORIZED TO BE RELEASED.

BY: BRYAN J. SPINA ,P.E.
LICENSE NO.: 103776 DATE: 2/21/2017

BEXAR COUNTY
PUBLIC WORKS DEPARTMENT

NO	DATE	DESCRIPTION	DWG	CHK

REVISIONS

CP&Y
T.B.P.E. FIRM # 1741

LNV
TBPE FIRM NO. F-306
TBPLS FIRM NO. 10126502
engineers | architects | surveyors
8918 TESORO DR., SUITE 401
SAN ANTONIO, TX 78217
WWW.LNVINC.COM
PH. (210) 822-2232
FAX (210) 822-4032

TALLEY ROAD
SW3P LAYOUT
PHASE 2
SHEET 6 OF 14

PROJECT NUMBER:		SHEET NO.
0849-01-046		518
DESIGNED BY: –	ROADWAY/HIGHWAY:	
CHECKED BY: –	TALLEY ROAD	
DRAWN BY: –	STATE	COUNTY
CHECKED BY: –	TEXAS	BEXAR

cpybw_ANSIB.tbl
cpypdf_ANSIB.pltcfg
pw:/Active Projects/BEXA14048.01/8.00 Plans and Drawings/8.30 Cut Sheets/8.3.13 SW3P/14048SW3P06_PH2.dgn
2/21/2017 5:10:36 PM bspina

CP&Y
CHECKPRINT

REVIEWER
Initial:
Date:
VERIFIED
Initial:
Date:
PROCESSED
Initial:
Date:
VERIFIED
Initial:
Date:

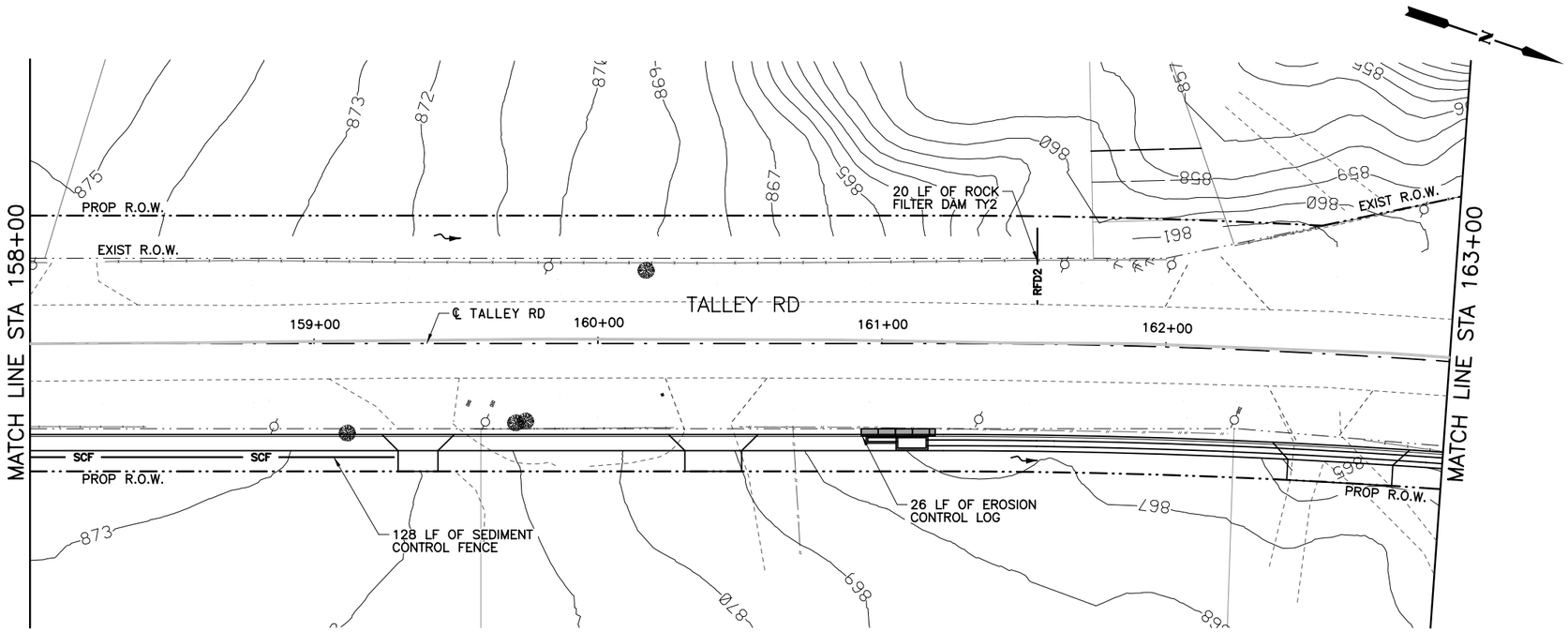

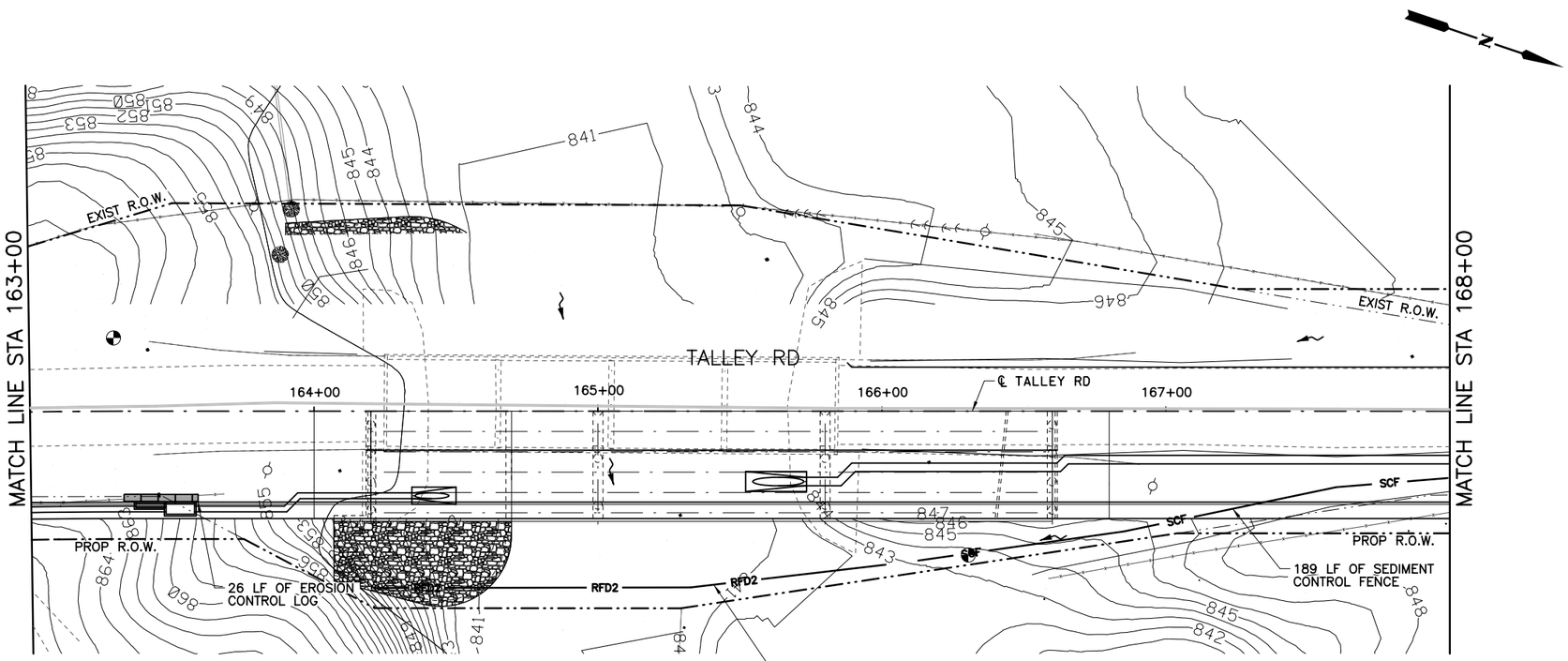

QUANTITY SUMMARY TALLEY RD.

TXDOT	ITEM	UNIT	QUANT
0506 6002	ROCK FILTER DAM (INSTALL)(TY 2)	LF	201
0506 6011	ROCK FILTER DAM (REMOVE)	LF	201
0506 6038	SEDIMENT CONTROL FENCE (INSTALL)	LF	317
0506 6039	SEDIMENT CONTROL FENCE (REMOVE)	LF	317
0506 6041	EROSION CONTROL LOG (INSTALL)	LF	52
0506 6043	EROSION CONTROL LOG (REMOVE)	LF	52

LEGEND

- SCF — SEDIMENT CONTROL FENCE
- RFD2 — ROCK FILTER DAM TY 2
- EROSION CONTROL LOG
- DITCH FLOW ARROWS
- TRAFFIC FLOW ARROWS
- EXISTING RIGHT-OF-WAY
- PROPOSED RIGHT-OF-WAY

HORIZ.
25 12.5 0 25 50
SCALE FEET

THIS DOCUMENT IS FOR INTERIM REVIEW AND IS NOT INTENDED FOR CONSTRUCTION, BIDDING, PERMIT OR OTHER UNAUTHORIZED PURPOSES. THESE DOCUMENTS/PLANS WERE AUTHORIZED TO BE RELEASED.

BY: BRYAN J. SPINA ,P.E.
LICENSE NO.: 103776 DATE: 2/21/2017

BEXAR COUNTY
PUBLIC WORKS DEPARTMENT

NO	DATE	DESCRIPTION	DWG	CHK

REVISIONS

CP&Y
T.B.P.E. FIRM # 1741

LNV
engineers | architects | surveyors
8918 TESORO DR., SUITE 401
SAN ANTONIO, TX 78217
WWW.LNVINC.COM
TBPE FIRM NO. F-366
TBPLS FIRM NO. 10126502
PH. (210) 822-2232
FAX (210) 822-4032

TALLEY ROAD
SW3P LAYOUT
PHASE 2
SHEET 7 OF 14

PROJECT NUMBER:		SHEET NO.
0849-01-046		519
DESIGNED BY: –	ROADWAY/HIGHWAY:	
CHECKED BY: –	TALLEY ROAD	
DRAWN BY: –	STATE	COUNTY
CHECKED BY: –	TEXAS	BEXAR

cpybw_ANSIB.tbl
cpypdf_ANSIB.pltcfg
pw:/Active Projects/BEXA14048.01/8.00 Plans and Drawings/8.30 Cut Sheets/8.3.13 SW3P/14048SW3P07_PH2.dgn
2/21/2017 5:10:45 PM bsping

CP&Y
CHECKPRINT

REVIEWER
Initial:
Date:
VERIFIED
Initial:
Date:
PROCESSED
Initial:
Date:
VERIFIED
Initial:
Date:

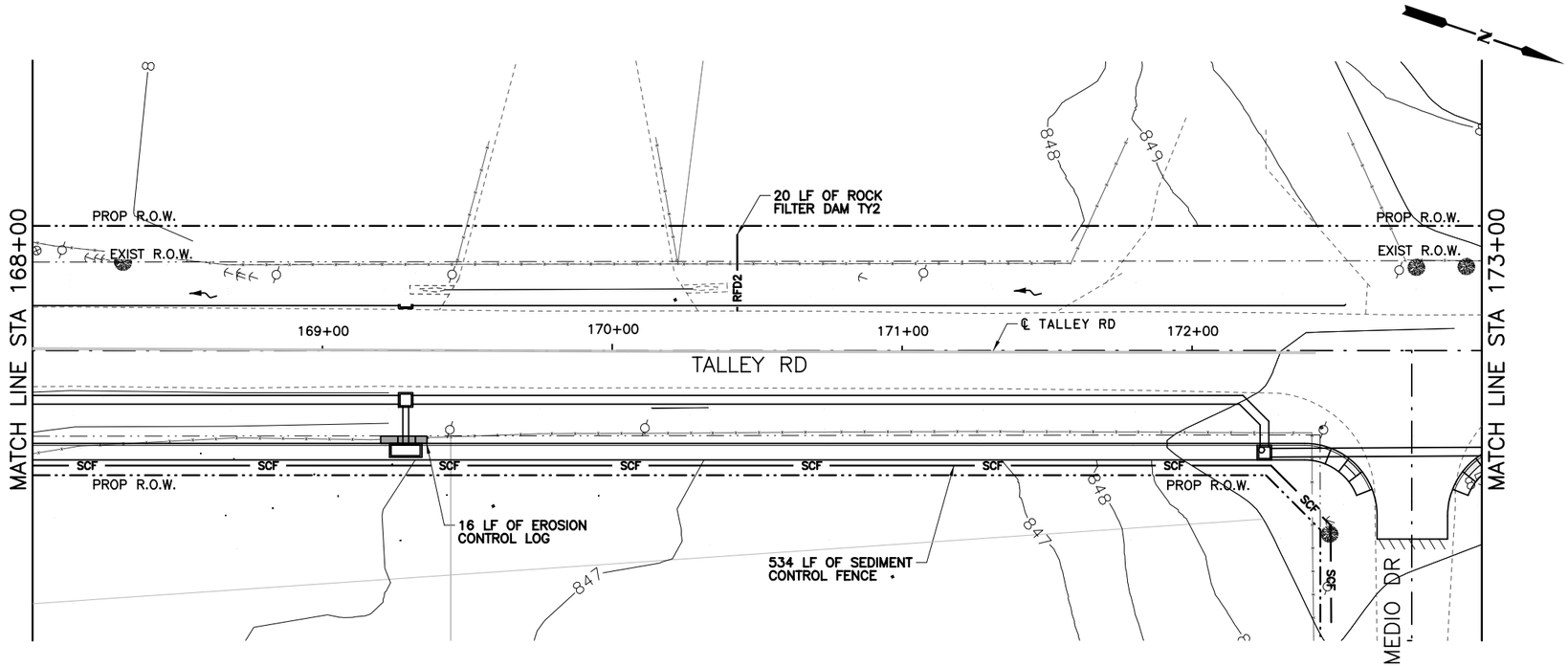

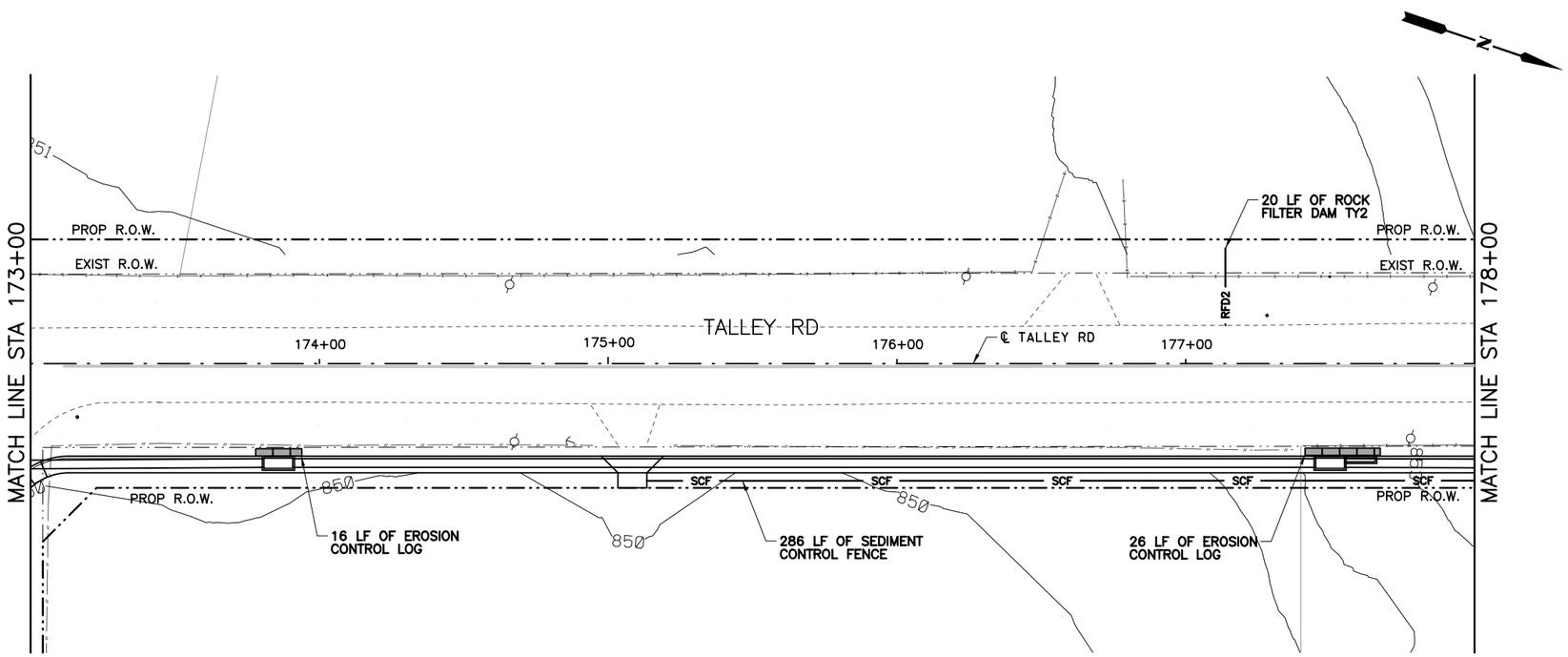

QUANTITY SUMMARY TALLEY RD.

TXDOT	ITEM	UNIT	QUANT
0506 6002	ROCK FILTER DAM (INSTALL)(TY 2)	LF	40
0506 6011	ROCK FILTER DAM (REMOVE)	LF	40
0506 6038	SEDIMENT CONTROL FENCE (INSTALL)	LF	820
0506 6039	SEDIMENT CONTROL FENCE (REMOVE)	LF	820
0506 6041	EROSION CONTROL LOG (INSTALL)	LF	58
0506 6043	EROSION CONTROL LOG (REMOVE)	LF	58

LEGEND

- SCF — SEDIMENT CONTROL FENCE
- RFD2 — ROCK FILTER DAM TY 2
- EROSION CONTROL LOG
- DITCH FLOW ARROWS
- TRAFFIC FLOW ARROWS
- EXISTING RIGHT-OF-WAY
- PROPOSED RIGHT-OF-WAY

HORIZ.
25 12.5 0 25 50
SCALE FEET

THIS DOCUMENT IS FOR INTERIM REVIEW AND IS NOT INTENDED FOR CONSTRUCTION, BIDDING, PERMIT OR OTHER UNAUTHORIZED PURPOSES. THESE DOCUMENTS/PLANS WERE AUTHORIZED TO BE RELEASED.

BY: BRYAN J. SPINA ,P.E.
LICENSE NO.: 103776 DATE: 2/21/2017

BEXAR COUNTY
PUBLIC WORKS DEPARTMENT

NO	DATE	DESCRIPTION	DWG	CHK

REVISIONS

CP&Y
T.B.P.E. FIRM # 1741

LNV
TBPE FIRM NO. F-366
TBPLS FIRM NO. 10126502
engineers | architects | surveyors
8918 TESORO DR., SUITE 401
SAN ANTONIO, TX 78217
PH. (210) 822-2232
FAX (210) 822-4032
WWW.LNVINC.COM

TALLEY ROAD
SW3P LAYOUT
PHASE 2
SHEET 8 OF 14

PROJECT NUMBER:		SHEET NO.
0849-01-046		520
DESIGNED BY: –	ROADWAY/HIGHWAY:	
CHECKED BY: –	TALLEY ROAD	
DRAWN BY: –	STATE	COUNTY
CHECKED BY: –	TEXAS	BEXAR

cpybw_ANSIB.tbl
cpypdf_ANSIB.pltcfg
pw:/Active Projects/BEXA14048.01/8.00 Plans and Drawings/8.30 Cut Sheets/8.3.13 SW3P/14048SW3P08_PH2.dgn
2/21/2017 5:10:53 PM bspina

CP&Y
CHECKPRINT

REVIEWER
Initial:
Date:
VERIFIED
Initial:
Date:
PROCESSED
Initial:
Date:
VERIFIED
Initial:
Date:

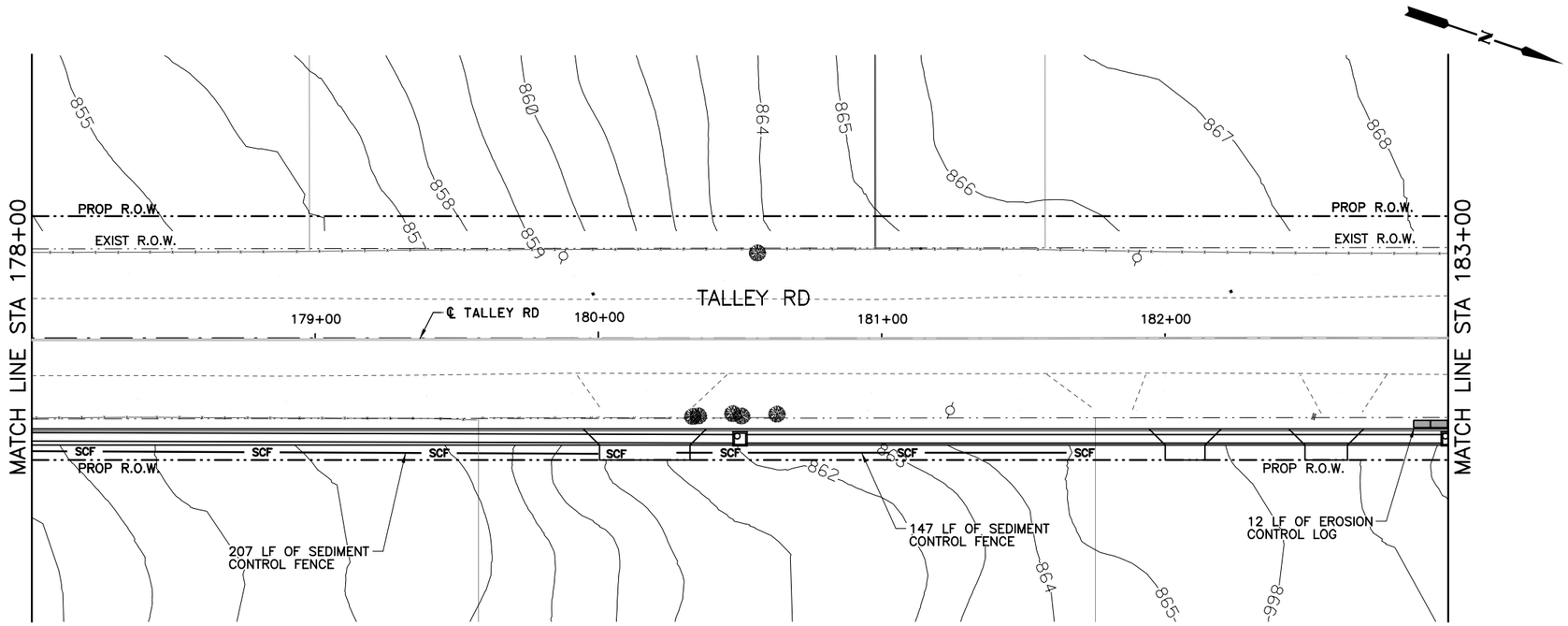

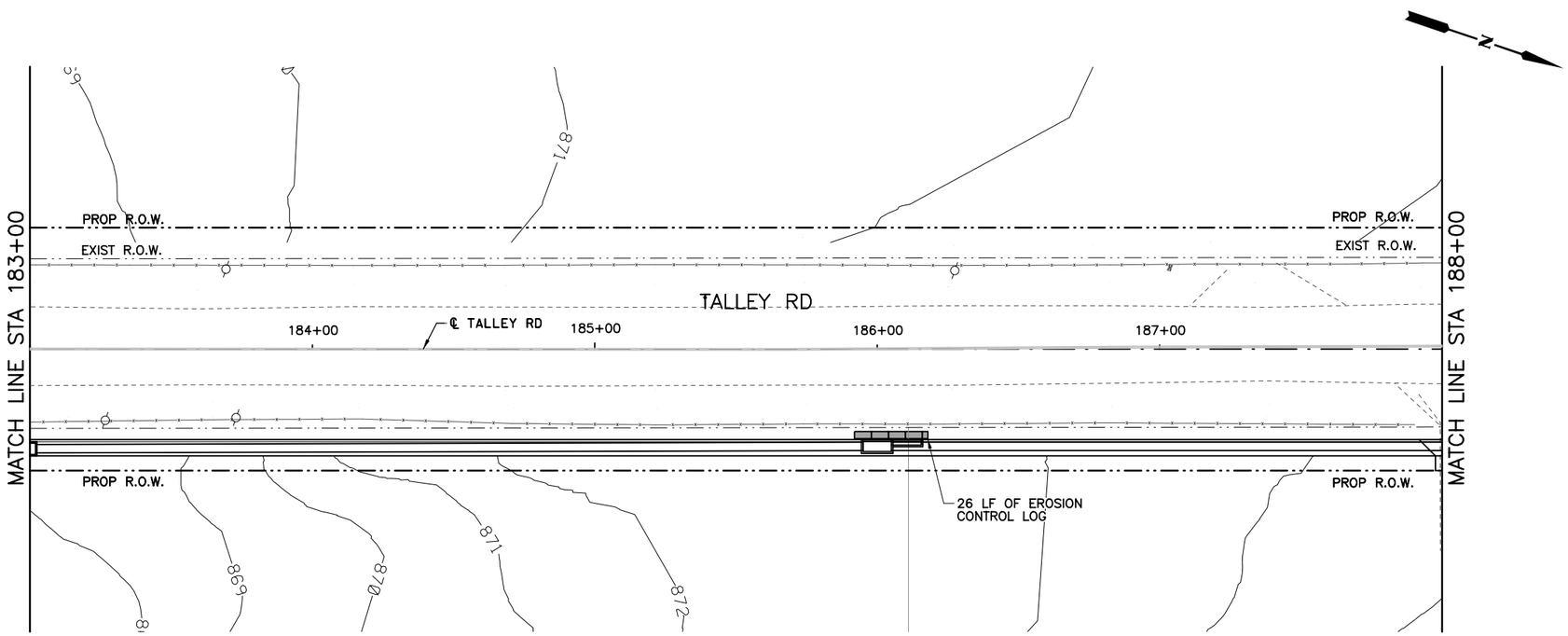

QUANTITY SUMMARY TALLEY RD.

TXDOT	ITEM	UNIT	QUANT
0506 6002	ROCK FILTER DAM (INSTALL)(TY 2)	LF	0
0506 6011	ROCK FILTER DAM (REMOVE)	LF	0
0506 6038	SEDIMENT CONTROL FENCE (INSTALL)	LF	354
0506 6039	SEDIMENT CONTROL FENCE (REMOVE)	LF	354
0506 6041	EROSION CONTROL LOG (INSTALL)	LF	38
0506 6043	EROSION CONTROL LOG (REMOVE)	LF	38

LEGEND

- SCF — SEDIMENT CONTROL FENCE
- RFD2 — ROCK FILTER DAM TY 2
- EROSION CONTROL LOG
- DITCH FLOW ARROWS
- TRAFFIC FLOW ARROWS
- EXISTING RIGHT-OF-WAY
- PROPOSED RIGHT-OF-WAY

HORIZ.
25 12.5 0 25 50
SCALE FEET

THIS DOCUMENT IS FOR INTERIM REVIEW AND IS NOT INTENDED FOR CONSTRUCTION, BIDDING, PERMIT OR OTHER UNAUTHORIZED PURPOSES. THESE DOCUMENTS/PLANS WERE AUTHORIZED TO BE RELEASED.

BY: BRYAN J. SPINA ,P.E.
LICENSE NO.: 103776 DATE: 2/21/2017

BEXAR COUNTY
PUBLIC WORKS DEPARTMENT

NO	DATE	DESCRIPTION	DWG	CHK

REVISIONS

CP&Y
T.B.P.E. FIRM # 1741

LNV
TBPE FIRM NO. F-306
TBPLS FIRM NO. 10126502
engineers | architects | surveyors
8918 TESORO DR., SUITE 401
SAN ANTONIO, TX 78217
PH. (210) 822-2232
FAX (210) 822-4032
WWW.LNVINC.COM

TALLEY ROAD
SW3P LAYOUT
PHASE 2
SHEET 9 OF 14

PROJECT NUMBER:		SHEET NO.
0849-01-046		521
DESIGNED BY: –	ROADWAY/HIGHWAY:	
CHECKED BY: –	TALLEY ROAD	
DRAWN BY: –	STATE	COUNTY
CHECKED BY: –	TEXAS	BEXAR

cpybw_ANSIB.tbl
cppdf_ANSIB.pltcfg
pw:/Active Projects/BEXA14048.01/8.00 Plans and Drawings/8.30 Cut Sheets/8.3.13 SW3P/14048SW3P09_PH2.dgn
2/21/2017 5:11:01 PM bspina

CP&Y
CHECKPRINT

REVIEWER
Initial:
Date:
VERIFIED
Initial:
Date:
PROCESSED
Initial:
Date:
VERIFIED
Initial:
Date:

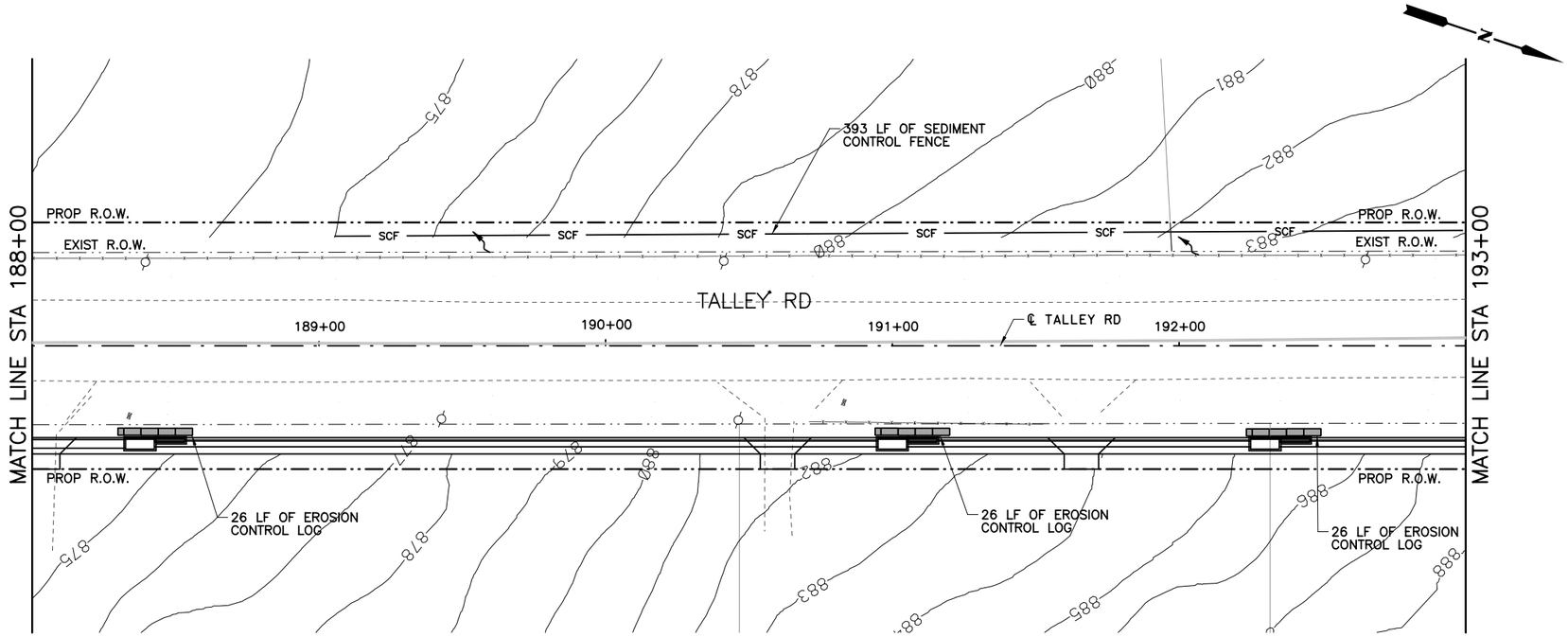

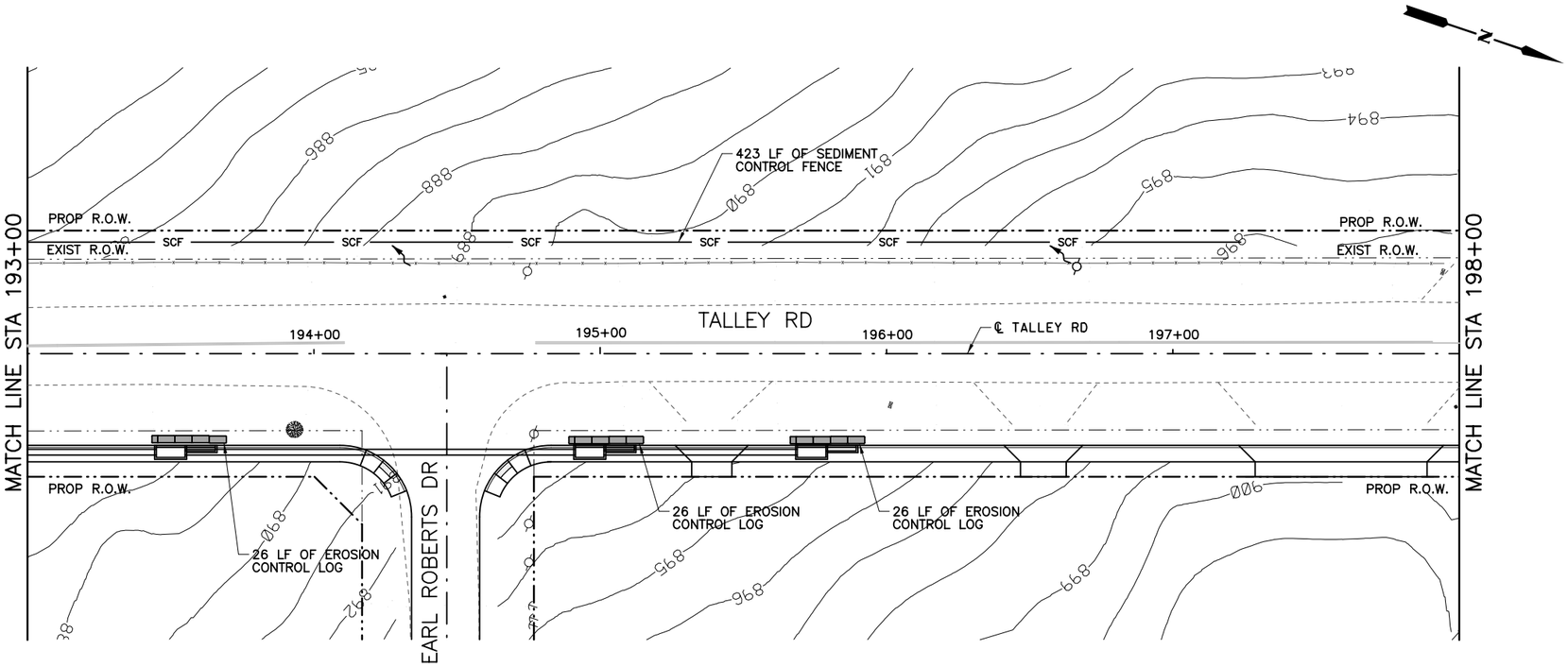

QUANTITY SUMMARY TALLEY RD.

TXDOT	ITEM	UNIT	QUANT
0506 6002	ROCK FILTER DAM (INSTALL)(TY 2)	LF	0
0506 6011	ROCK FILTER DAM (REMOVE)	LF	0
0506 6038	SEDIMENT CONTROL FENCE (INSTALL)	LF	816
0506 6039	SEDIMENT CONTROL FENCE (REMOVE)	LF	816
0506 6041	EROSION CONTROL LOG (INSTALL)	LF	156
0506 6043	EROSION CONTROL LOG (REMOVE)	LF	156

LEGEND

- SCF — SEDIMENT CONTROL FENCE
- RFD2 — ROCK FILTER DAM TY 2
- EROSION CONTROL LOG
- DITCH FLOW ARROWS
- TRAFFIC FLOW ARROWS
- EXISTING RIGHT-OF-WAY
- PROPOSED RIGHT-OF-WAY

HORIZ.
25 12.5 0 25 50
SCALE FEET

THIS DOCUMENT IS FOR INTERIM REVIEW AND IS NOT INTENDED FOR CONSTRUCTION, BIDDING, PERMIT OR OTHER UNAUTHORIZED PURPOSES. THESE DOCUMENTS/PLANS WERE AUTHORIZED TO BE RELEASED.

BY: BRYAN J. SPINA ,P.E.
LICENSE NO.: 103776 DATE: 2/21/2017

BEXAR COUNTY
PUBLIC WORKS DEPARTMENT

NO	DATE	DESCRIPTION	DWG	CHK

REVISIONS

CP&Y
T.B.P.E. FIRM # 1741

LNV
engineers | architects | surveyors
8918 TESORO DR., SUITE 401
SAN ANTONIO, TX 78217
WWW.LNVINC.COM
TBPE FIRM NO. F-306
TBPLS FIRM NO. 10126502
PH. (210) 822-2232
FAX (210) 822-4032

TALLEY ROAD
SW3P LAYOUT
PHASE 2
SHEET 10 OF 14

PROJECT NUMBER:		SHEET NO.
0849-01-046		522
DESIGNED BY: –	ROADWAY/HIGHWAY:	
CHECKED BY: –	TALLEY ROAD	
DRAWN BY: –	STATE	COUNTY
CHECKED BY: –	TEXAS	BEXAR

cpybw_ANSIB.tbl
cpypdf_ANSIB.pltcfg
pw:/Active Projects/BEXA14048.01/8.00 Plans and Drawings/8.30 Cut Sheets/8.3.13 SW3P/14048SW3P10_PH2.dgn
2/21/2017 5:11:09 PM bspina
pw:/Active Projects/BEXA14048.01/8.00 Plans and Drawings/8.30 Cut Sheets/8.3.13 SW3P/14048SW3P10_PH2.dgn

CP&Y
CHECKPRINT

REVIEWER
Initial:
Date:
VERIFIED
Initial:
Date:
PROCESSED
Initial:
Date:
VERIFIED
Initial:
Date:

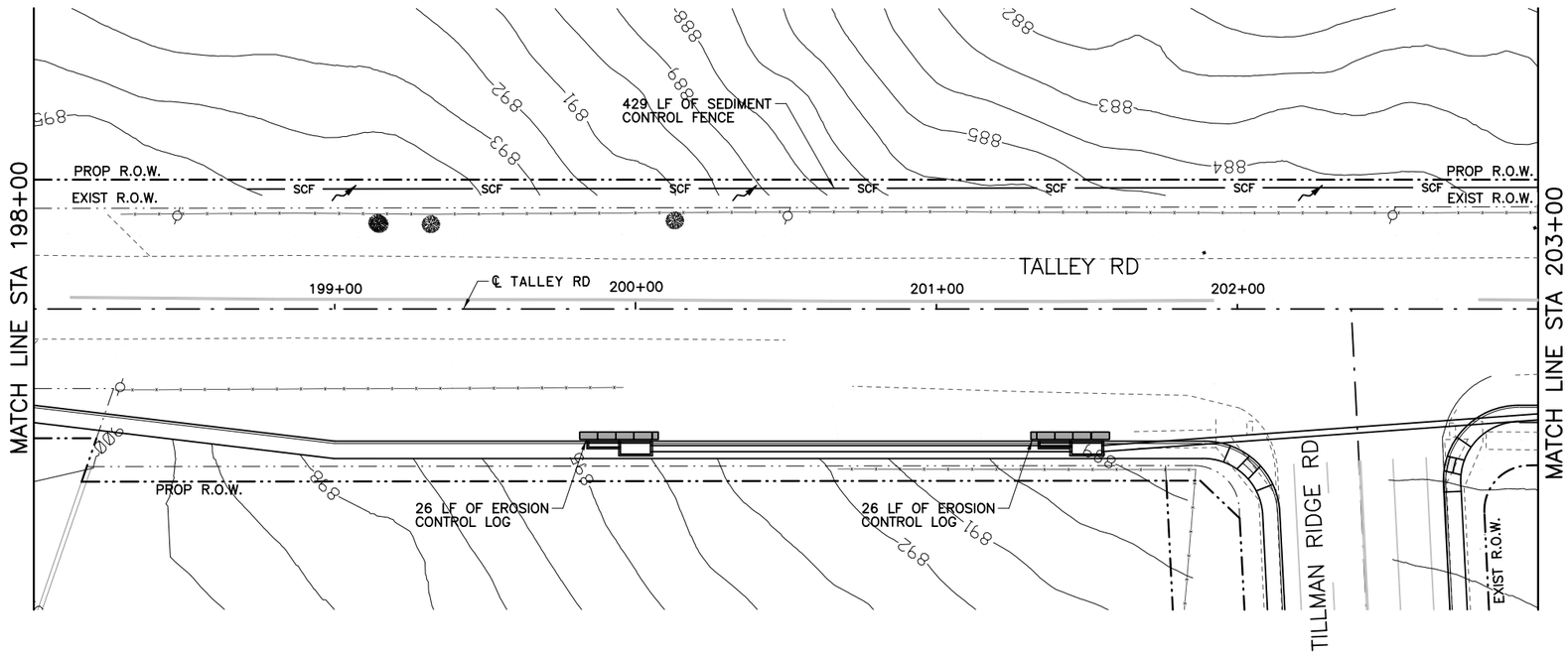

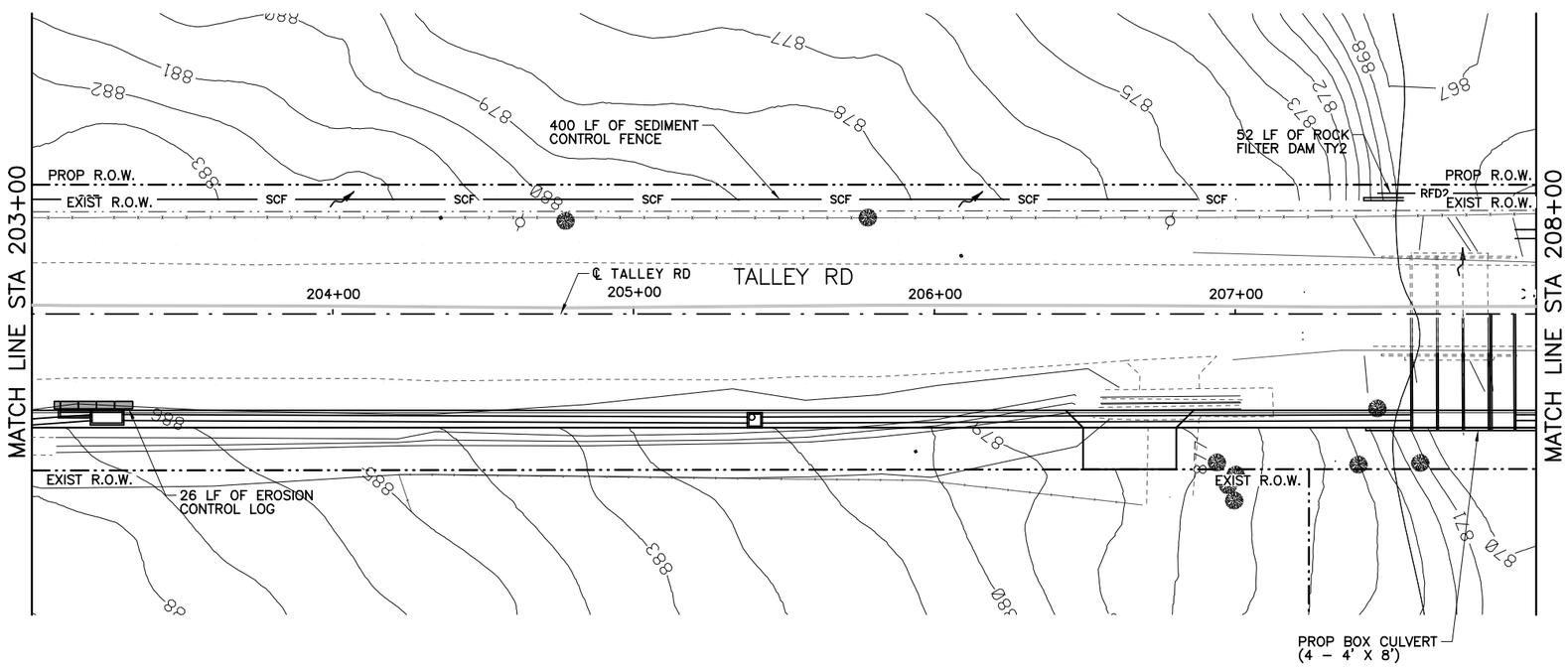

QUANTITY SUMMARY TALLEY RD.

TXDOT	ITEM	UNIT	QUANT
0506 6002	ROCK FILTER DAM (INSTALL)(TY 2)	LF	52
0506 6011	ROCK FILTER DAM (REMOVE)	LF	52
0506 6038	SEDIMENT CONTROL FENCE (INSTALL)	LF	829
0506 6039	SEDIMENT CONTROL FENCE (REMOVE)	LF	829
0506 6041	EROSION CONTROL LOG (INSTALL)	LF	78
0506 6043	EROSION CONTROL LOG (REMOVE)	LF	78

LEGEND

- SCF — SEDIMENT CONTROL FENCE
- RFD2 — ROCK FILTER DAM TY 2
- EROSION CONTROL LOG
- DITCH FLOW ARROWS
- TRAFFIC FLOW ARROWS
- EXISTING RIGHT-OF-WAY
- PROPOSED RIGHT-OF-WAY

HORIZ.
25 12.5 0 25 50
SCALE FEET

THIS DOCUMENT IS FOR INTERIM REVIEW AND IS NOT INTENDED FOR CONSTRUCTION, BIDDING, PERMIT OR OTHER UNAUTHORIZED PURPOSES. THESE DOCUMENTS/PLANS WERE AUTHORIZED TO BE RELEASED.

BY: BRYAN J. SPINA ,P.E.
LICENSE NO.: 103776 DATE: 2/21/2017

BEXAR COUNTY
PUBLIC WORKS DEPARTMENT

NO	DATE	DESCRIPTION	DWG	CHK

REVISIONS

CP&Y
T.B.P.E. FIRM # 1741

LNV
TBPE FIRM NO. F-306
TBPLS FIRM NO. 10126502
engineers | architects | surveyors
8918 TESORO DR., SUITE 401
SAN ANTONIO, TX 78217
PH. (210) 822-2232
FAX (210) 822-4032
WWW.LNVINC.COM

TALLEY ROAD
SW3P LAYOUT
PHASE 2
SHEET 11 OF 14

PROJECT NUMBER:		SHEET NO.
0849-01-046		523
DESIGNED BY: –	ROADWAY/HIGHWAY:	
CHECKED BY: –	TALLEY ROAD	
DRAWN BY: –	STATE	COUNTY
CHECKED BY: –	TEXAS	BEXAR

cpybw_ANSIB.tbl
cpypdf_ANSIB.pltcfg
pw:/Active Projects/BEXA14048.01/8.00 Plans and Drawings/8.30 Cut Sheets/8.3.13 SW3P/14048SW3P11_PH2.dgn
2/21/2017 5:11:16 PM bspina

CP&Y
CHECKPRINT

REVIEWER
Initial:
Date:
VERIFIED
Initial:
Date:
PROCESSED
Initial:
Date:
VERIFIED
Initial:
Date:

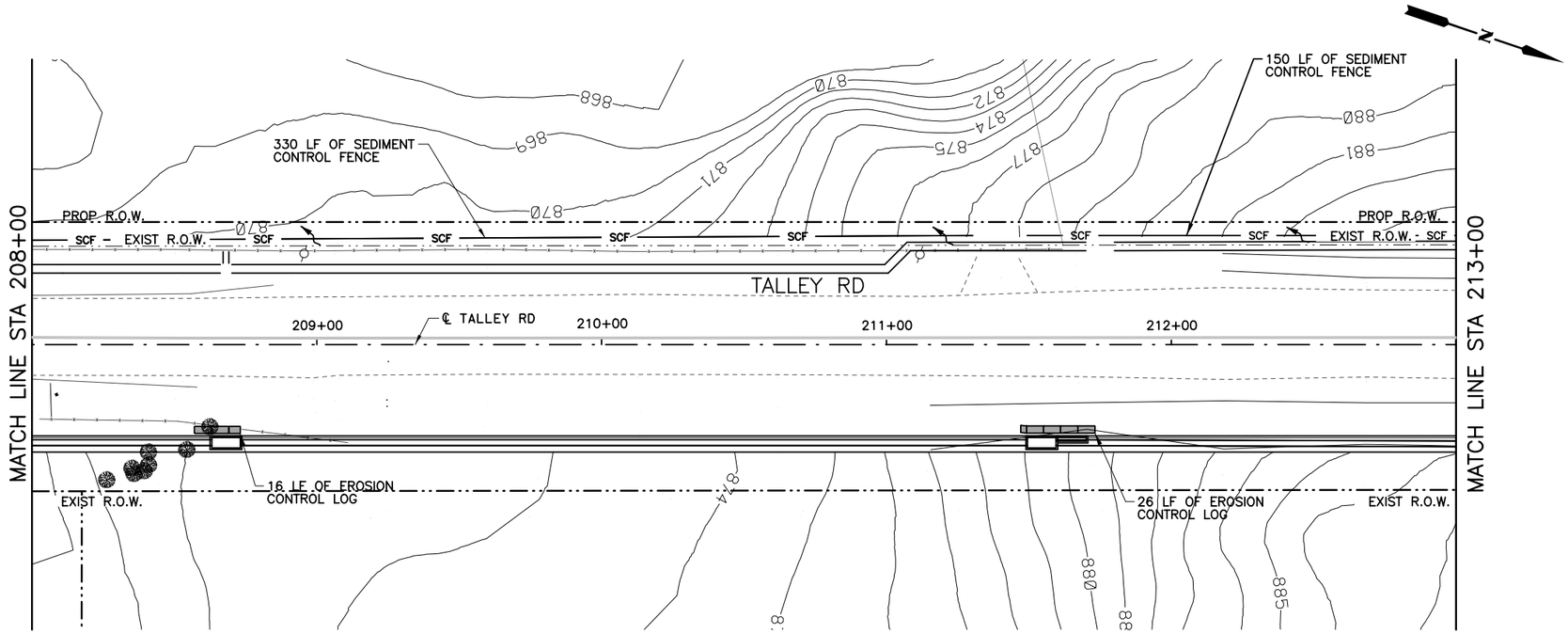

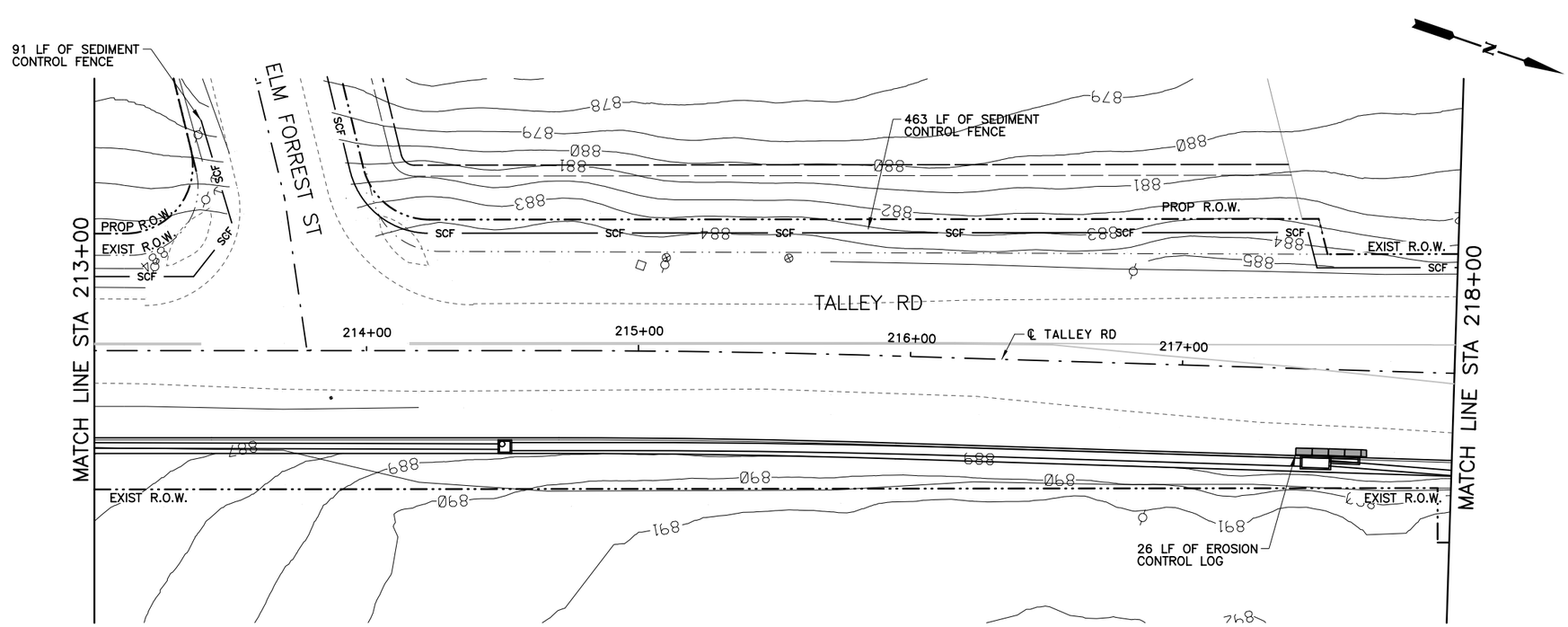

QUANTITY SUMMARY TALLEY RD.			
TXDOT	ITEM	UNIT	QUANT
0506 6002	ROCK FILTER DAM (INSTALL)(TY 2)	LF	0
0506 6011	ROCK FILTER DAM (REMOVE)	LF	0
0506 6038	SEDIMENT CONTROL FENCE (INSTALL)	LF	1,034
0506 6039	SEDIMENT CONTROL FENCE (REMOVE)	LF	1,034
0506 6041	EROSION CONTROL LOG (INSTALL)	LF	68
0506 6043	EROSION CONTROL LOG (REMOVE)	LF	68

LEGEND

- SCF — SEDIMENT CONTROL FENCE
- RFD2 — ROCK FILTER DAM TY 2
- EROSION CONTROL LOG
- DITCH FLOW ARROWS
- TRAFFIC FLOW ARROWS
- EXISTING RIGHT-OF-WAY
- PROPOSED RIGHT-OF-WAY

HORIZ.
25 12.5 0 25 50
SCALE FEET

THIS DOCUMENT IS FOR INTERIM REVIEW AND IS NOT INTENDED FOR CONSTRUCTION, BIDDING, PERMIT OR OTHER UNAUTHORIZED PURPOSES. THESE DOCUMENTS/PLANS WERE AUTHORIZED TO BE RELEASED.

BY: BRYAN J. SPINA ,P.E.
LICENSE NO.: 103776 DATE: 2/21/2017

BEXAR COUNTY
PUBLIC WORKS DEPARTMENT

NO	DATE	DESCRIPTION	DWG	CHK

REVISIONS

CP&Y
T.B.P.E. FIRM # 1741

LNV
TBPE FIRM NO. F-306
TBPLS FIRM NO. 10126502
engineers | architects | surveyors
8918 TESORO DR., SUITE 401
SAN ANTONIO, TX 78217
PH. (210) 822-2232
FAX (210) 822-4032
WWW.LNVINC.COM

TALLEY ROAD
SW3P LAYOUT
PHASE 2
SHEET 12 OF 14

PROJECT NUMBER:		SHEET NO.
0849-01-046		524
DESIGNED BY: –	ROADWAY/HIGHWAY:	
CHECKED BY: –	TALLEY ROAD	
DRAWN BY: –	STATE	COUNTY
CHECKED BY: –	TEXAS	BEXAR

cpybw_ANSIB.tbl
cpypdf_ANSIB.pltcfg
pw:/Active Projects/BEXA14048.01/8.00 Plans and Drawings/8.30 Cut Sheets/8.3.13 SW3P/14048SW3P12_PH2.dgn
2/21/2017 5:11:24 PM bspina

CP&Y
CHECKPRINT

REVIEWER
Initial:
Date:
VERIFIED
Initial:
Date:
PROCESSED
Initial:
Date:
VERIFIED
Initial:
Date:

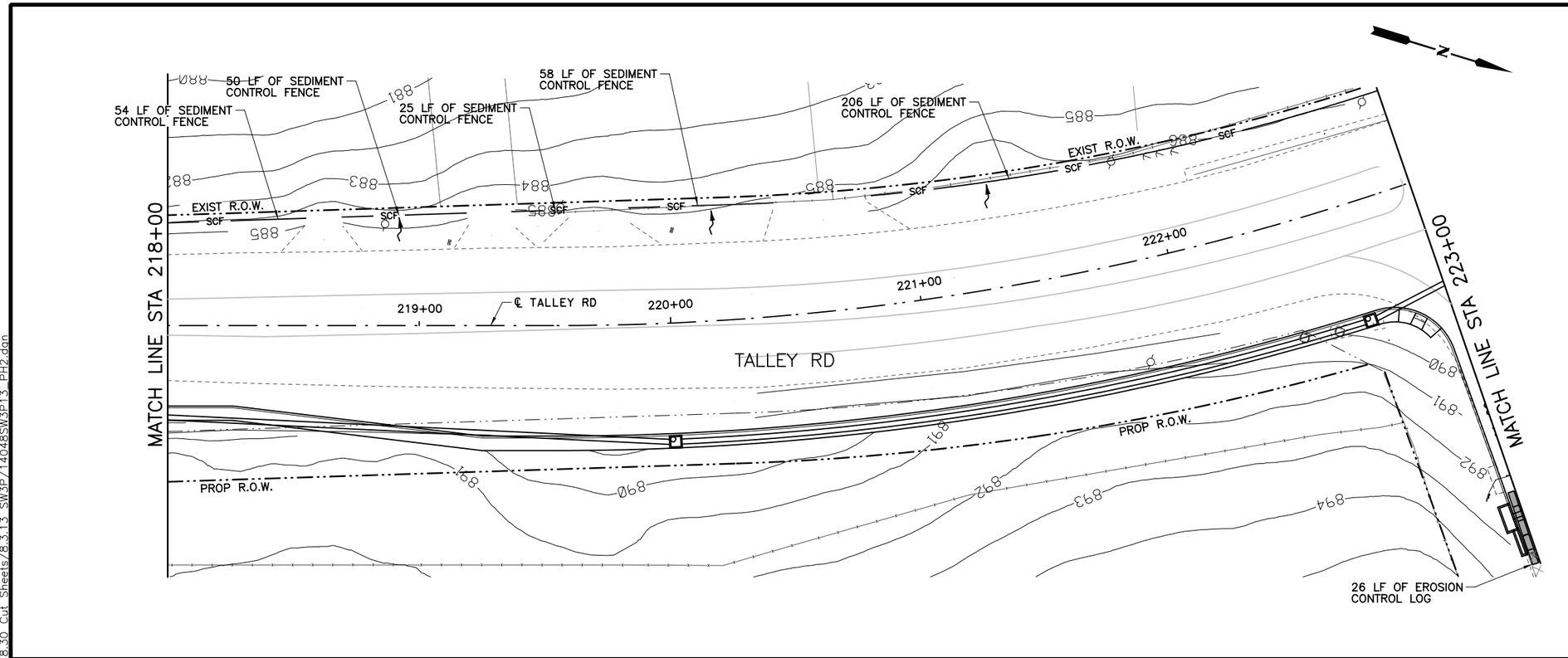

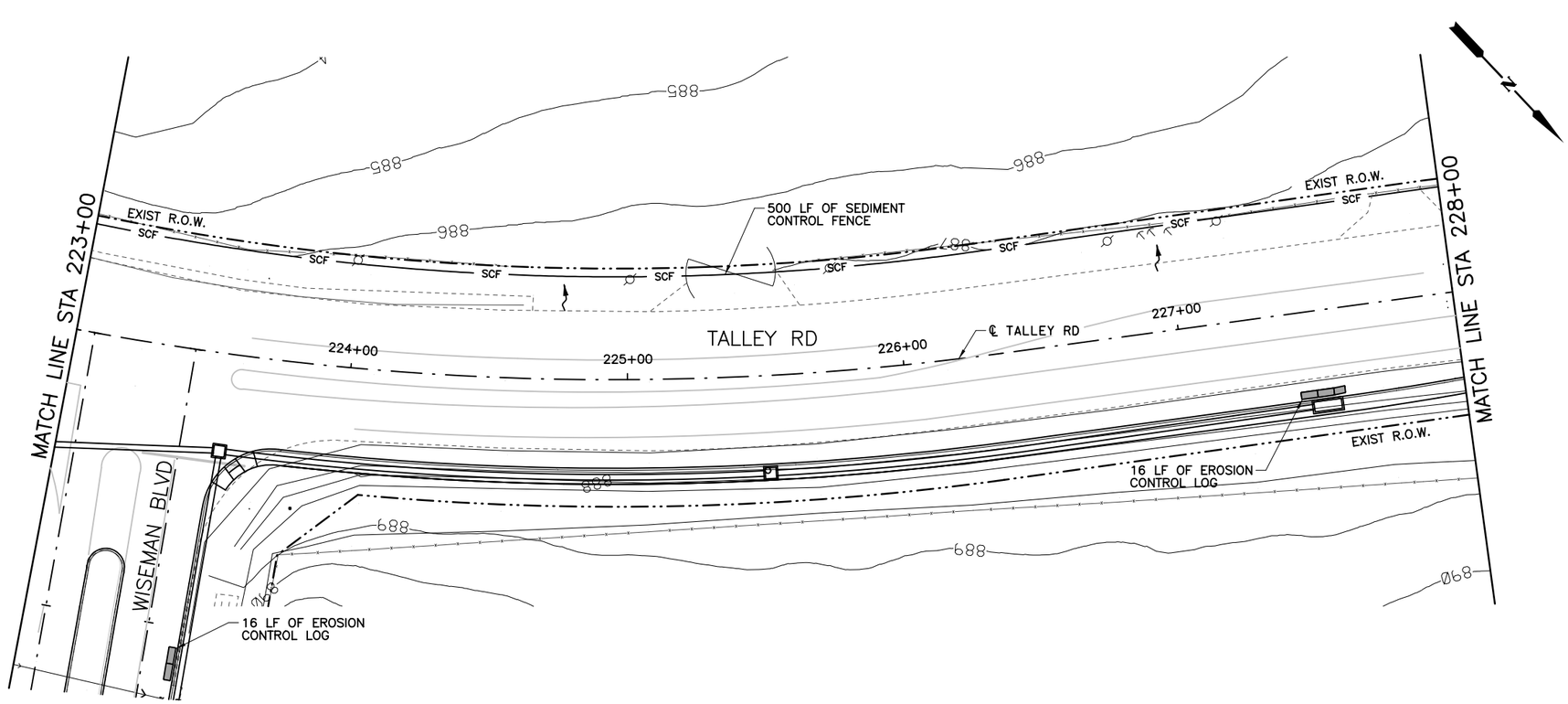

QUANTITY SUMMARY TALLEY RD.

0506 6002	ITEM	UNIT	QUANT
0506 6011	ROCK FILTER DAM (INSTALL)(TY 2)	LF	0
0506 6038	ROCK FILTER DAM (REMOVE)	LF	0
0506 6039	SEDIMENT CONTROL FENCE (INSTALL)	LF	893
0506 6041	SEDIMENT CONTROL FENCE (REMOVE)	LF	893
0506 6043	EROSION CONTROL LOG (INSTALL)	LF	58
0506 6043	EROSION CONTROL LOG (REMOVE)	LF	58

LEGEND

- SCF — SEDIMENT CONTROL FENCE
- RFD2 — ROCK FILTER DAM TY 2
- EROSION CONTROL LOG
- DITCH FLOW ARROWS
- TRAFFIC FLOW ARROWS
- EXISTING RIGHT-OF-WAY
- PROPOSED RIGHT-OF-WAY

HORIZ.
25 12.5 0 25 50
SCALE FEET

THIS DOCUMENT IS FOR INTERIM REVIEW AND IS NOT INTENDED FOR CONSTRUCTION, BIDDING, PERMIT OR OTHER UNAUTHORIZED PURPOSES. THESE DOCUMENTS/PLANS WERE AUTHORIZED TO BE RELEASED.

BY: BRYAN J. SPINA ,P.E.
LICENSE NO.: 103776 DATE: 2/21/2017

BEXAR COUNTY
PUBLIC WORKS DEPARTMENT

NO	DATE	DESCRIPTION	DWG	CHK

REVISIONS

CP&Y
T.B.P.E. FIRM # 1741

LNV
engineers | architects | surveyors
8918 TESORO DR., SUITE 401
SAN ANTONIO, TX 78217
WWW.LNVINC.COM
TBPE FIRM NO. F-306
TBPLS FIRM NO. 10126502
PH. (210) 822-2232
FAX (210) 822-4032

TALLEY ROAD
SW3P LAYOUT
PHASE 2
SHEET 13 OF 14

PROJECT NUMBER:	SHEET NO.
0849-01-046	525

DESIGNED BY:	–	ROADWAY/HIGHWAY:	
CHECKED BY:	–	TALLEY ROAD	
DRAWN BY:	–	STATE	COUNTY
CHECKED BY:	–	TEXAS	BEXAR

cpybw_ANSIB.tbl
cpypdf_ANSIB.pltcfg
pw:/Active Projects/BEXA14048.01/8.00 Plans and Drawings/8.30 Cut Sheets/8.3.13 SW3P/14048SW3P13_PH2.dgn
2/21/2017 5:11:31 PM bsping

CP&Y
CHECKPRINT

REVIEWER
Initial:
Date:
VERIFIED
Initial:
Date:
PROCESSED
Initial:
Date:
VERIFIED
Initial:
Date:

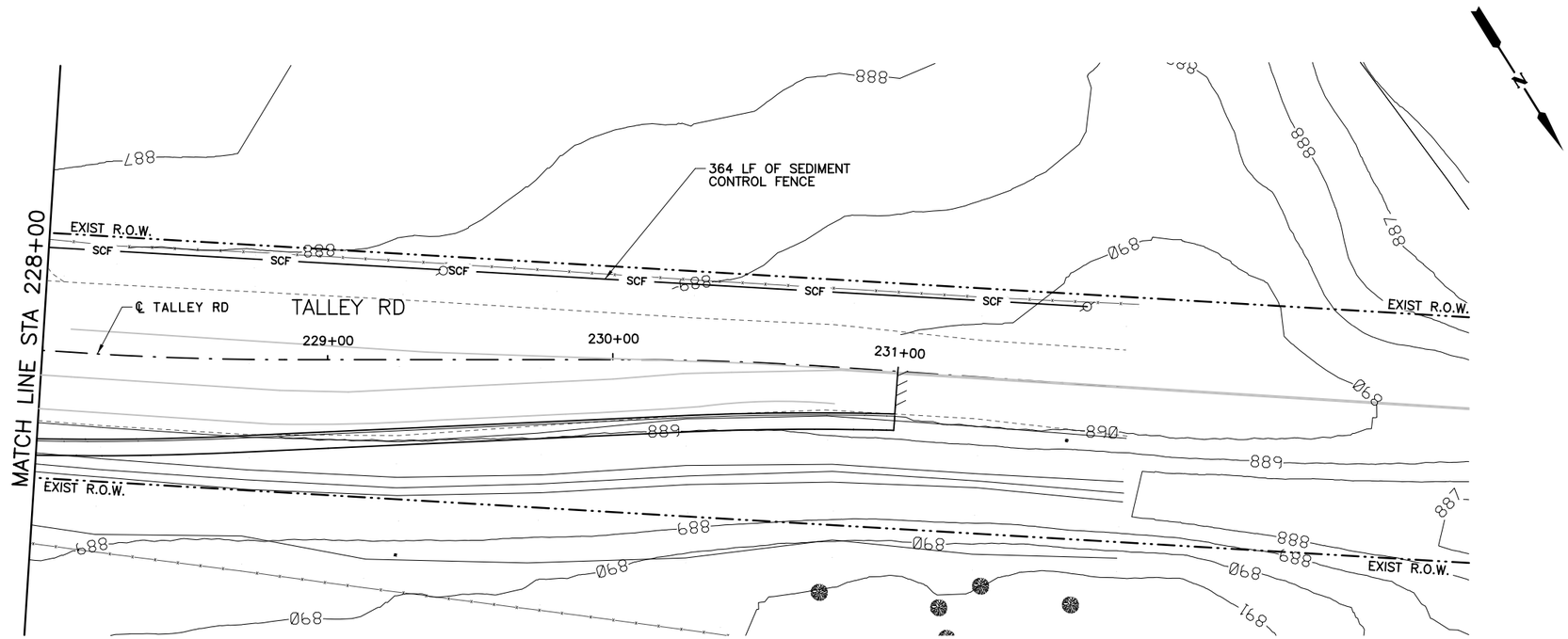

QUANTITY SUMMARY TALLEY RD.			
TXDOT	ITEM	UNIT	QUANT
0506 6002	ROCK FILTER DAM (INSTALL)(TY 2)	LF	0
0506 6011	ROCK FILTER DAM (REMOVE)	LF	0
0506 6038	SEDIMENT CONTROL FENCE (INSTALL)	LF	364
0506 6039	SEDIMENT CONTROL FENCE (REMOVE)	LF	364
0506 6041	EROSION CONTROL LOG (INSTALL)	LF	0
0506 6043	EROSION CONTROL LOG (REMOVE)	LF	0

LEGEND

- SCF — SEDIMENT CONTROL FENCE
- RFD2 — ROCK FILTER DAM TY 2
- EROSION CONTROL LOG
- DITCH FLOW ARROWS
- TRAFFIC FLOW ARROWS
- EXISTING RIGHT-OF-WAY
- PROPOSED RIGHT-OF-WAY

HORIZ.
25 12.5 0 25 50
SCALE FEET

THIS DOCUMENT IS FOR INTERIM REVIEW AND IS NOT INTENDED FOR CONSTRUCTION, BIDDING, PERMIT OR OTHER UNAUTHORIZED PURPOSES. THESE DOCUMENTS/PLANS WERE AUTHORIZED TO BE RELEASED.

BY: BRYAN J. SPINA ,P.E.
LICENSE NO.: 103776 DATE: 2/21/2017

BEXAR COUNTY
PUBLIC WORKS DEPARTMENT

NO	DATE	DESCRIPTION	DWG	CHK

REVISIONS

CP&Y
T.B.P.E. FIRM # 1741

LNV
TBPE FIRM NO. F-366
TBPLS FIRM NO. 10126502
engineers | architects | surveyors
8918 TESORO DR., SUITE 401
SAN ANTONIO, TX 78217 WWW.LNVINC.COM
PH. (210) 822-2232
FAX (210) 822-4032

TALLEY ROAD
SW3P LAYOUT
PHASE 2
SHEET 14 OF 14

PROJECT NUMBER:		SHEET NO.
0849-01-046		526
DESIGNED BY: –	ROADWAY/HIGHWAY:	
CHECKED BY: –	TALLEY ROAD	
DRAWN BY: –	STATE	COUNTY
CHECKED BY: –	TEXAS	BEXAR

cpybw_ANSIB.tbl
cpypdf_ANSIB.pltcfg
pw:/Active Projects/BEXA14048.01/8.00 Plans and Drawings/8.30 Cut Sheets/8.3.13 SW3P/14048SW3P14_PH2.dgn
2/21/2017 5:11:38 PM bspina

CP&Y
CHECKPRINT

REVIEWER
Initial:
Date:
VERIFIED
Initial:
Date:
PROCESSED
Initial:
Date:
VERIFIED
Initial:
Date:

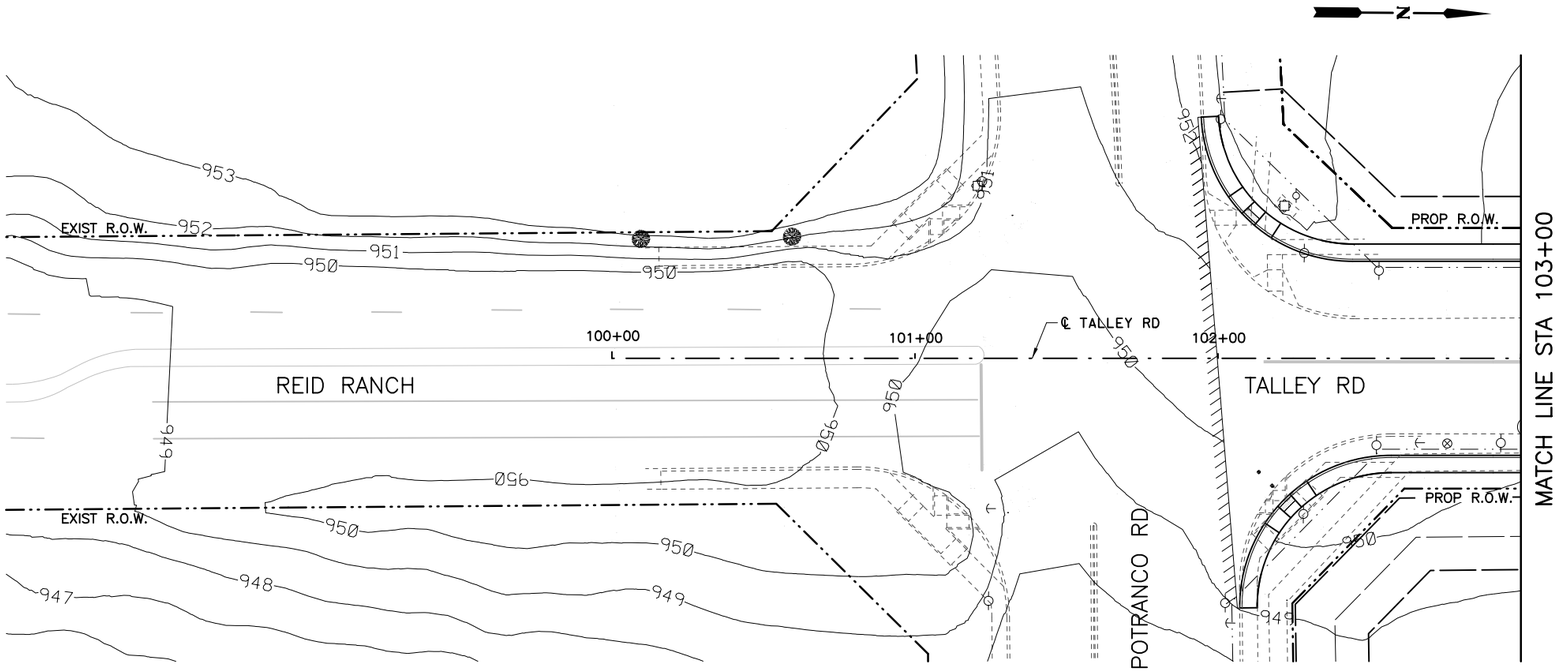

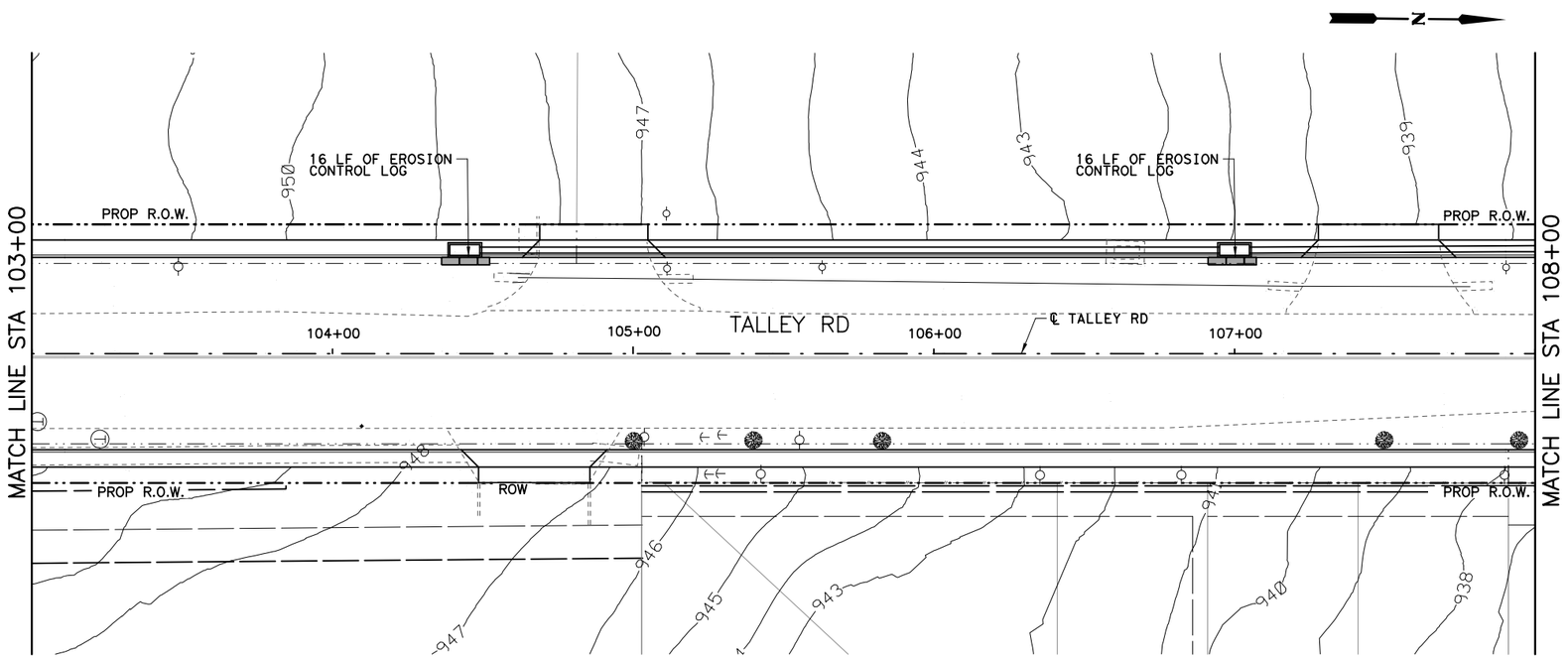

QUANTITY SUMMARY TALLEY RD.

TXDOT	ITEM	UNIT	QUANT
0506 6002	ROCK FILTER DAM (INSTALL)(TY 2)	LF	0
0506 6011	ROCK FILTER DAM (REMOVE)	LF	0
0506 6038	SEDIMENT CONTROL FENCE (INSTALL)	LF	0
0506 6039	SEDIMENT CONTROL FENCE (REMOVE)	LF	0
0506 6041	EROSION CONTROL LOG (INSTALL)	LF	32
0506 6043	EROSION CONTROL LOG (REMOVE)	LF	32

LEGEND

- SCF — SEDIMENT CONTROL FENCE
- RFD2 — ROCK FILTER DAM TY 2
- EROSION CONTROL LOG
- DITCH FLOW ARROWS
- TRAFFIC FLOW ARROWS
- EXISTING RIGHT-OF-WAY
- PROPOSED RIGHT-OF-WAY

HORIZ.
25 12.5 0 25 50
SCALE FEET

THIS DOCUMENT IS FOR INTERIM REVIEW AND IS NOT INTENDED FOR CONSTRUCTION, BIDDING, PERMIT OR OTHER UNAUTHORIZED PURPOSES. THESE DOCUMENTS/PLANS WERE AUTHORIZED TO BE RELEASED.

BY: BRYAN J. SPINA ,P.E.
LICENSE NO.: 103776 DATE: 2/21/2017

BEXAR COUNTY
PUBLIC WORKS DEPARTMENT

NO	DATE	DESCRIPTION	DWG	CHK

REVISIONS

CP&Y
T.B.P.E. FIRM # 1741
TBPE FIRM NO. F-306
TBPLS FIRM NO. 10126502

LNV
engineers | architects | surveyors
8918 TESORO DR., SUITE 401
SAN ANTONIO, TX 78217
PH. (210) 822-2232
FAX (210) 822-4032
WWW.LNVINC.COM

TALLEY ROAD

SW3P LAYOUT
PHASE 3
SHEET 1 OF 14

PROJECT NUMBER:		SHEET NO.
0849-01-046		527
DESIGNED BY: –	ROADWAY/HIGHWAY:	
CHECKED BY: –	TALLEY ROAD	
DRAWN BY: –	STATE	COUNTY
CHECKED BY: –	TEXAS	BEXAR

cpybw_ANSIB.tbl
cpypdf_ANSIB.pltcfg
pw:/Active Projects/BEXA14048.01/8.00 Plans and Drawings/8.30 Cut Sheets/8.3.13 SW3P/14048SW3P01_PH3.dgn
2/21/2017 5:11:45 PM bspina

CP&Y
CHECKPRINT

REVIEWER
Initial:
Date:
VERIFIED
Initial:
Date:
PROCESSED
Initial:
Date:
VERIFIED
Initial:
Date:

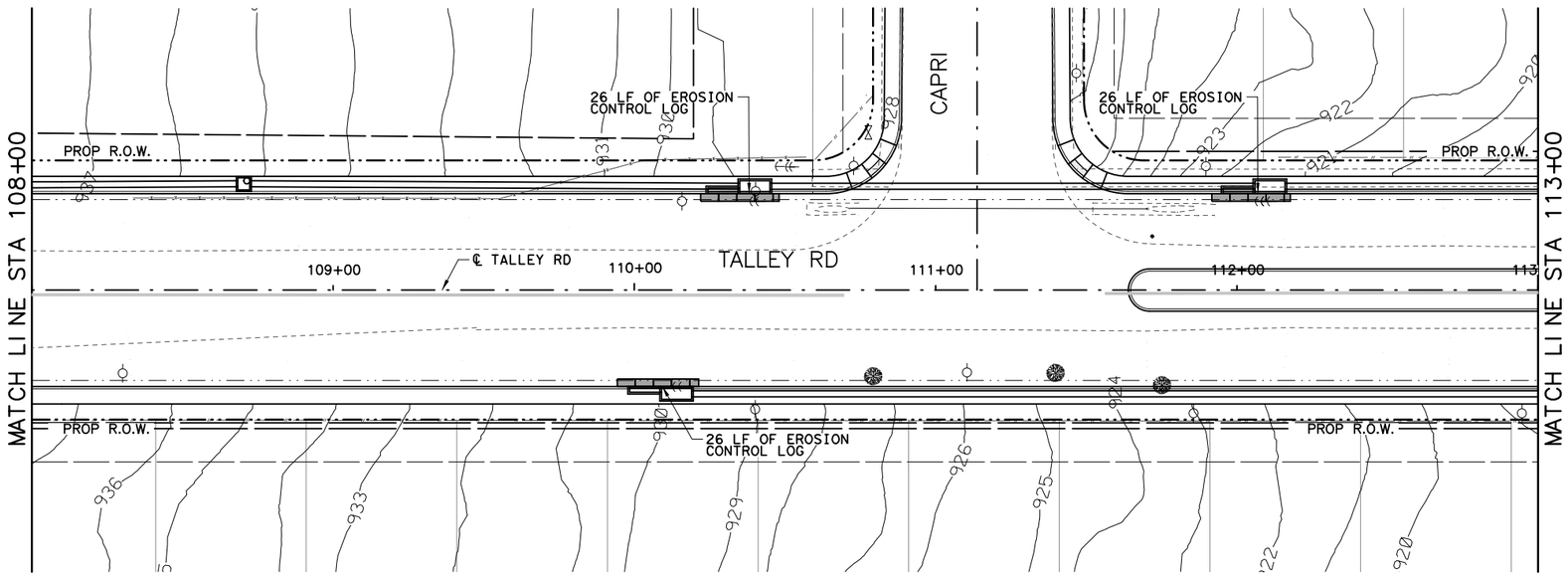

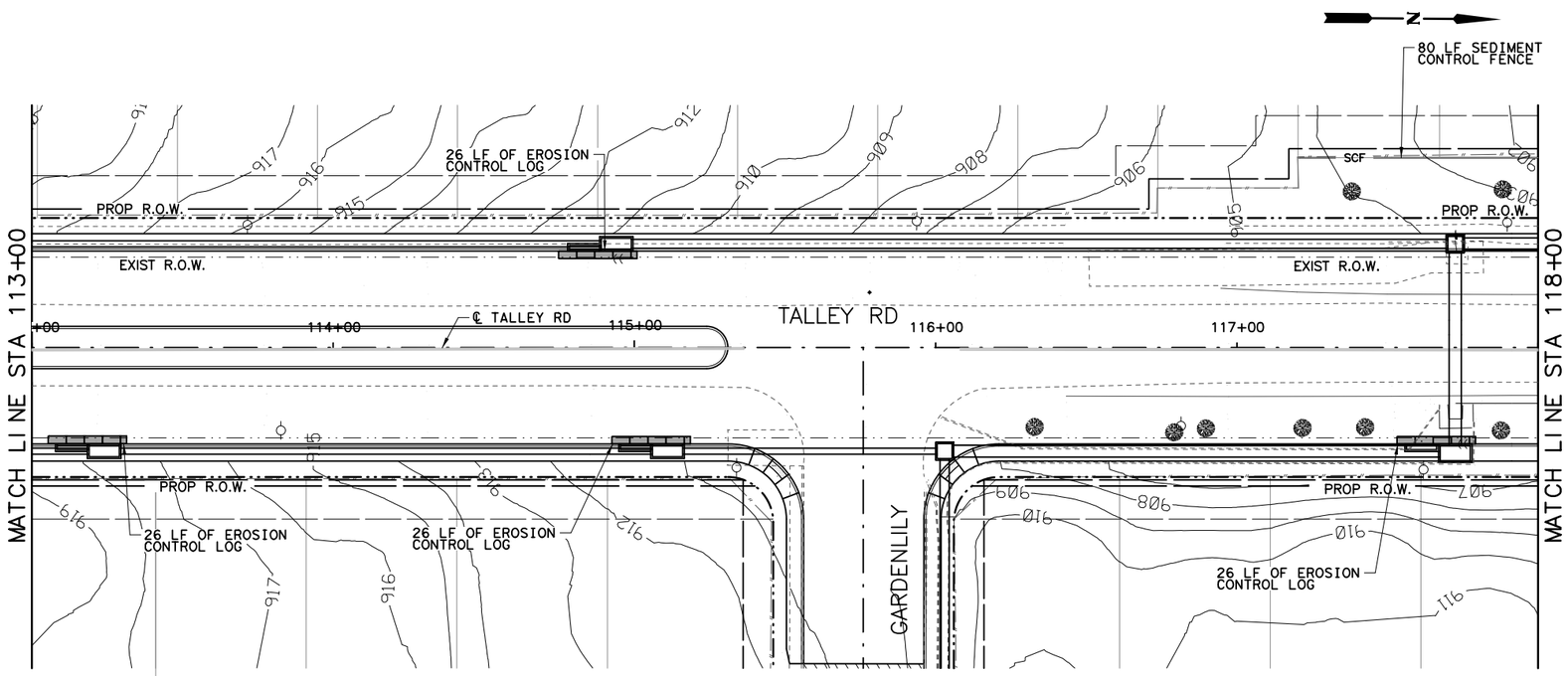

QUANTITY SUMMARY TALLEY RD.

TXDOT	ITEM	UNIT	QUANT
0506 6002	ROCK FILTER DAM (INSTALL)(TY 2)	LF	0
0506 6011	ROCK FILTER DAM (REMOVE)	LF	0
0506 6038	SEDIMENT CONTROL FENCE (INSTALL)	LF	80
0506 6039	SEDIMENT CONTROL FENCE (REMOVE)	LF	80
0506 6041	EROSION CONTROL LOG (INSTALL)	LF	182
0506 6043	EROSION CONTROL LOG (REMOVE)	LF	182

LEGEND

- SCF — SEDIMENT CONTROL FENCE
- RFD2 — ROCK FILTER DAM TY 2
- EROSION CONTROL LOG
- DITCH FLOW ARROWS
- TRAFFIC FLOW ARROWS
- EXISTING RIGHT-OF-WAY
- PROPOSED RIGHT-OF-WAY

HORIZ.
25 12.5 0 25 50
SCALE FEET

THIS DOCUMENT IS FOR INTERIM REVIEW AND IS NOT INTENDED FOR CONSTRUCTION, BIDDING, PERMIT OR OTHER UNAUTHORIZED PURPOSES. THESE DOCUMENTS/PLANS WERE AUTHORIZED TO BE RELEASED.

BY: BRYAN J. SPINA ,P.E.
LICENSE NO.: 103776 DATE: 2/21/2017

BEXAR COUNTY
PUBLIC WORKS DEPARTMENT

NO	DATE	DESCRIPTION	DWG	CHK

REVISIONS

CP&Y
T.B.P.E. FIRM # 1741

LNV
TBPE FIRM NO. F-306
TBPLS FIRM NO. 10126502
engineers | architects | surveyors
8918 TESORO DR., SUITE 401
SAN ANTONIO, TX 78217
WWW.LNVINC.COM
PH. (210) 822-2232
FAX (210) 822-4032

TALLEY ROAD
SW3P LAYOUT
PHASE 3
SHEET 2 OF 14

PROJECT NUMBER:		SHEET NO.
0849-01-046		528
DESIGNED BY: –	ROADWAY/HIGHWAY:	
CHECKED BY: –	TALLEY ROAD	
DRAWN BY: –	STATE	COUNTY
CHECKED BY: –	TEXAS	BEXAR

cpybw_ANSIB.tbl
cpypdf_ANSIB.pltcfg
pw:/Active Projects/BEXA14048.01/8.00 Plans and Drawings/8.30 Cut Sheets/8.3.13 SW3P/14048SW3P02_PH3.dgn
2/21/2017 5:11:52 PM bsping

CP&Y
CHECKPRINT

REVIEWER
Initial:
Date:
VERIFIED
Initial:
Date:
PROCESSED
Initial:
Date:
VERIFIED
Initial:
Date:

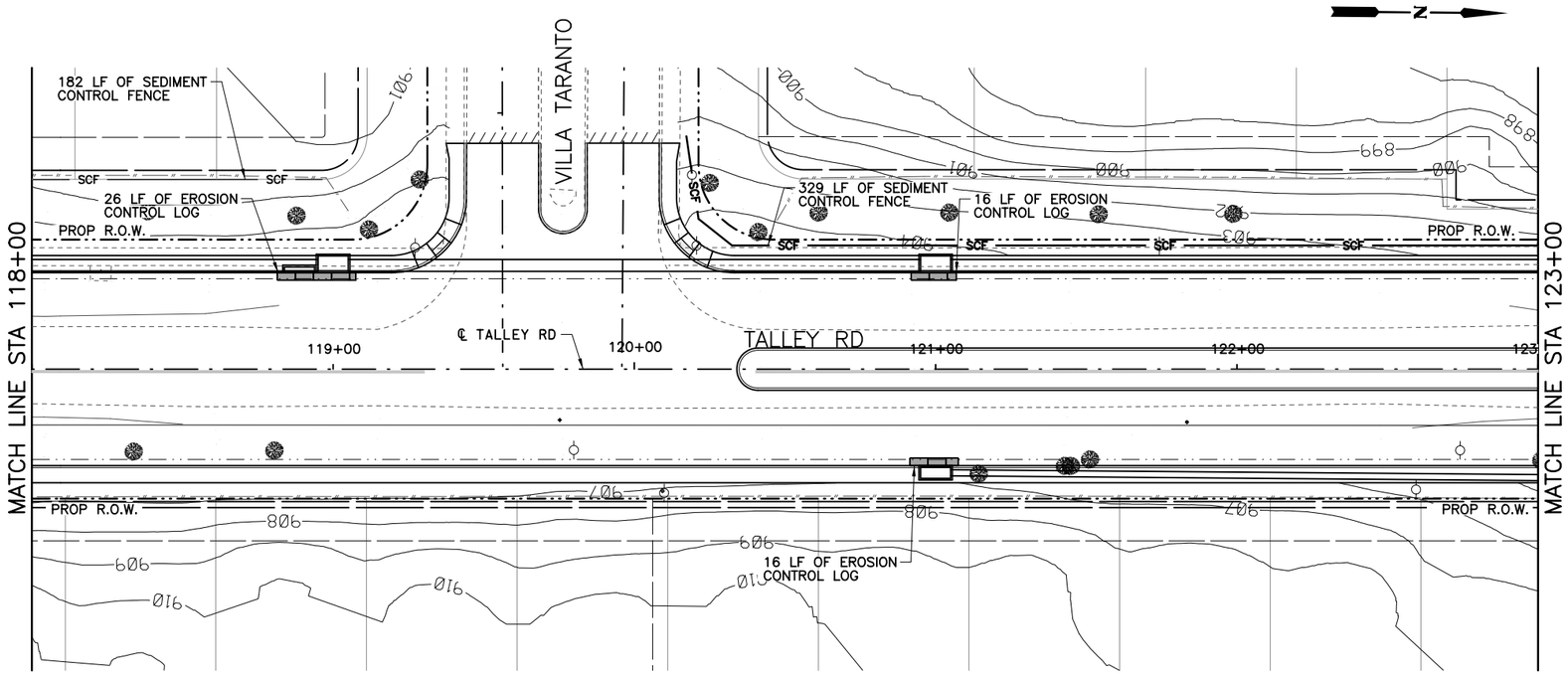

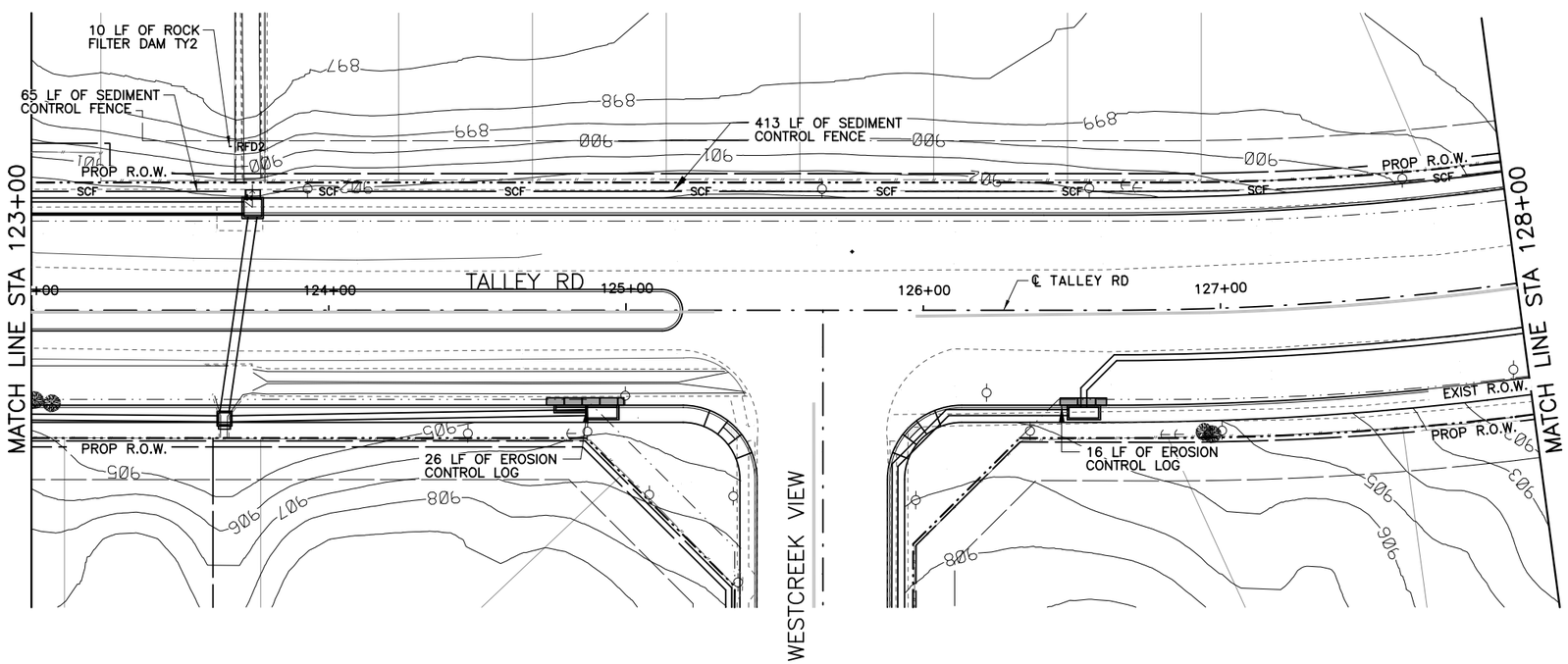

QUANTITY SUMMARY TALLEY RD.

TXDOT	ITEM	UNIT	QUANT
0506 6002	ROCK FILTER DAM (INSTALL)(TY 2)	LF	10
0506 6011	ROCK FILTER DAM (REMOVE)	LF	10
0506 6038	SEDIMENT CONTROL FENCE (INSTALL)	LF	989
0506 6039	SEDIMENT CONTROL FENCE (REMOVE)	LF	989
0506 6041	EROSION CONTROL LOG (INSTALL)	LF	100
0506 6043	EROSION CONTROL LOG (REMOVE)	LF	100

LEGEND

- SCF — SEDIMENT CONTROL FENCE
- RFD2 — ROCK FILTER DAM TY 2
- EROSION CONTROL LOG
- DITCH FLOW ARROWS
- TRAFFIC FLOW ARROWS
- EXISTING RIGHT-OF-WAY
- PROPOSED RIGHT-OF-WAY

HORIZ.
25 12.5 0 25 50
SCALE FEET

THIS DOCUMENT IS FOR INTERIM REVIEW AND IS NOT INTENDED FOR CONSTRUCTION, BIDDING, PERMIT OR OTHER UNAUTHORIZED PURPOSES. THESE DOCUMENTS/PLANS WERE AUTHORIZED TO BE RELEASED.

BY: BRYAN J. SPINA ,P.E.
LICENSE NO.: 103776 DATE: 2/21/2017

BEXAR COUNTY
PUBLIC WORKS DEPARTMENT

NO	DATE	DESCRIPTION	DWG	CHK

REVISIONS

CP&Y
T.B.P.E. FIRM # 1741

LNV
engineers | architects | surveyors
8918 TESORO DR., SUITE 401
SAN ANTONIO, TX 78217
WWW.LNVINC.COM
TBPE FIRM NO. F-306
TBPLS FIRM NO. 10126502
PH. (210) 822-2232
FAX (210) 822-4032

TALLEY ROAD
SW3P LAYOUT
PHASE 3
SHEET 3 OF 14

PROJECT NUMBER:		SHEET NO.
0849-01-046		529
DESIGNED BY: –	ROADWAY/HIGHWAY:	
CHECKED BY: –	TALLEY ROAD	
DRAWN BY: –	STATE	COUNTY
CHECKED BY: –	TEXAS	BEXAR

cpybw_ANSIB.tbl
cpypdf_ANSIB.pltcfg
pw:/Active Projects/BEXA14048.01/8.00 Plans and Drawings/8.30 Cut Sheets/8.3.13 SW3P/14048SW3P03_PH3.dgn
2/21/2017 5:11:59 PM bspina

CP&Y
CHECKPRINT

REVIEWER
Initial:
Date:
VERIFIED
Initial:
Date:
PROCESSED
Initial:
Date:
VERIFIED
Initial:
Date:

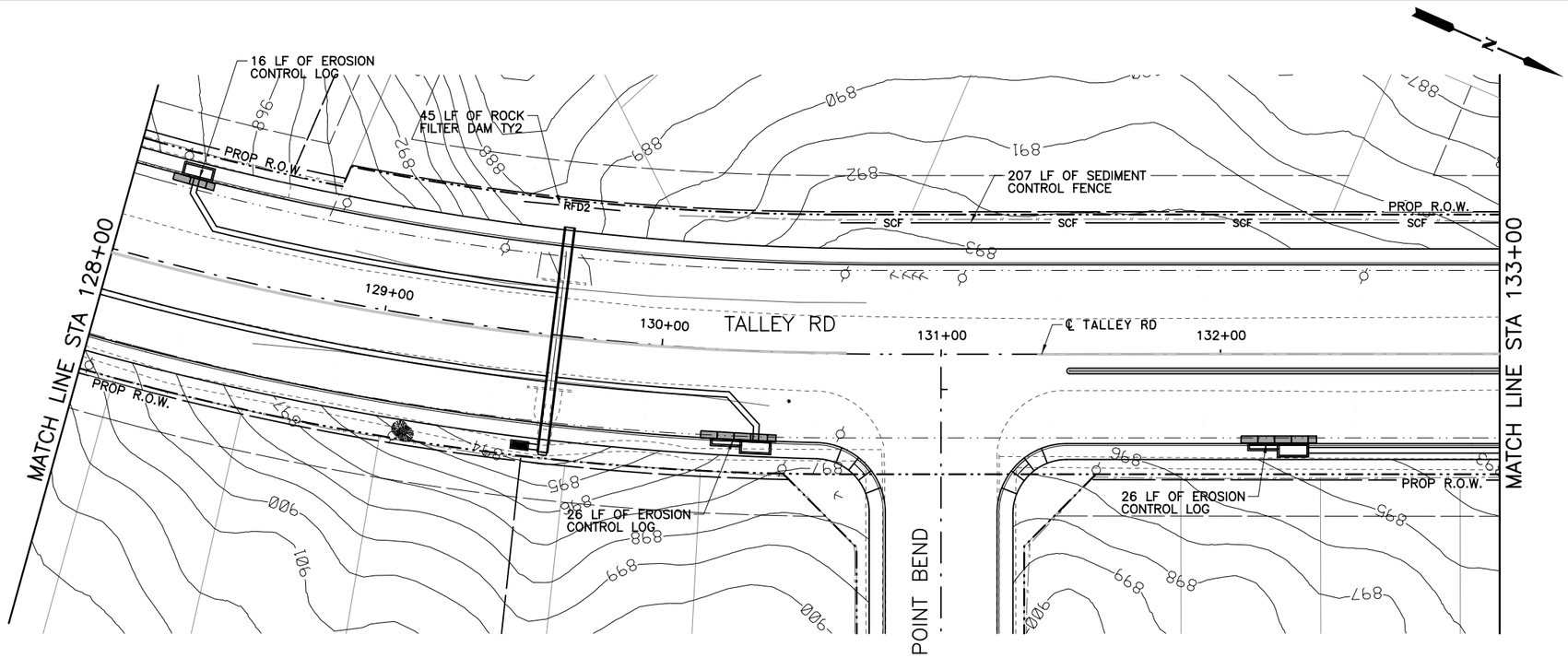

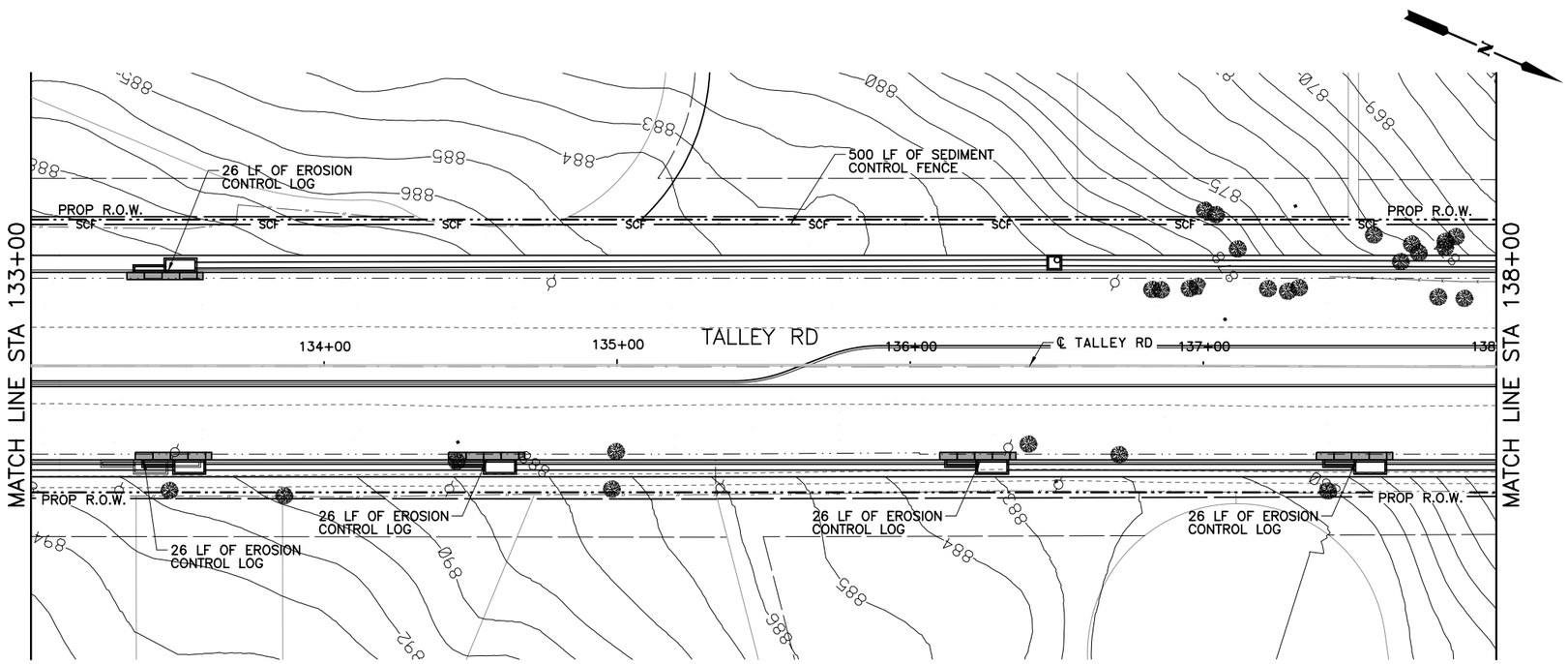

QUANTITY SUMMARY TALLEY RD.

TXDOT	ITEM	UNIT	QUANT
0506 6002	ROCK FILTER DAM (INSTALL)(TY 2)	LF	45
0506 6011	ROCK FILTER DAM (REMOVE)	LF	45
0506 6038	SEDIMENT CONTROL FENCE (INSTALL)	LF	707
0506 6039	SEDIMENT CONTROL FENCE (REMOVE)	LF	707
0506 6041	EROSION CONTROL LOG (INSTALL)	LF	198
0506 6043	EROSION CONTROL LOG (REMOVE)	LF	198

LEGEND

- SCF — SEDIMENT CONTROL FENCE
- RFD2 — ROCK FILTER DAM TY 2
- EROSION CONTROL LOG
- DITCH FLOW ARROWS
- TRAFFIC FLOW ARROWS
- EXISTING RIGHT-OF-WAY
- PROPOSED RIGHT-OF-WAY

HORIZ.
25 12.5 0 25 50
SCALE FEET

THIS DOCUMENT IS FOR INTERIM REVIEW AND IS NOT INTENDED FOR CONSTRUCTION, BIDDING, PERMIT OR OTHER UNAUTHORIZED PURPOSES. THESE DOCUMENTS/PLANS WERE AUTHORIZED TO BE RELEASED.

BY: BRYAN J. SPINA ,P.E.
LICENSE NO.: 103776 DATE: 2/21/2017

BEXAR COUNTY
PUBLIC WORKS DEPARTMENT

NO	DATE	DESCRIPTION	DWG	CHK

REVISIONS

CP&Y
T.B.P.E. FIRM # 1741

LNV
TBPE FIRM NO. F-306
TBPLS FIRM NO. 10126502
engineers | architects | surveyors
8918 TESORO DR., SUITE 401
SAN ANTONIO, TX 78217
WWW.LNVINC.COM
PH. (210) 822-2232
FAX (210) 822-4032

TALLEY ROAD
SW3P LAYOUT
PHASE 3
SHEET 4 OF 14

PROJECT NUMBER:		SHEET NO.
0849-01-046		530
DESIGNED BY: –	ROADWAY/HIGHWAY:	
CHECKED BY: –	TALLEY ROAD	
DRAWN BY: –	STATE	COUNTY
CHECKED BY: –	TEXAS	BEXAR

cpybw_ANSIB.tbl
cpypdf_ANSIB.pltcfg
pw:/Active Projects/BEXA14048.01/8.00 Plans and Drawings/8.30 Cut Sheets/8.3.13 SW3P/14048SW3P04_PH3.dgn
2/21/2017 5:12:06 PM bspina

CP&Y
CHECKPRINT

REVIEWER
Initial:
Date:
VERIFIED
Initial:
Date:
PROCESSED
Initial:
Date:
VERIFIED
Initial:
Date:

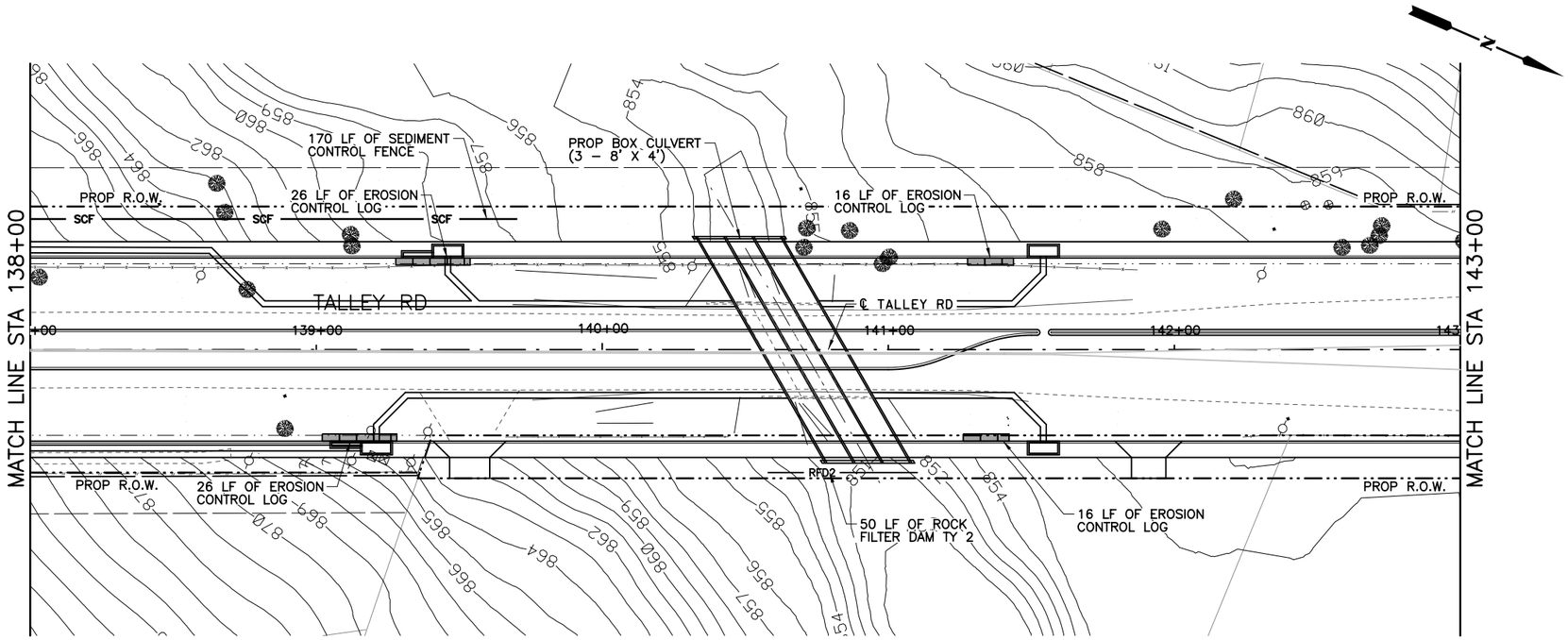

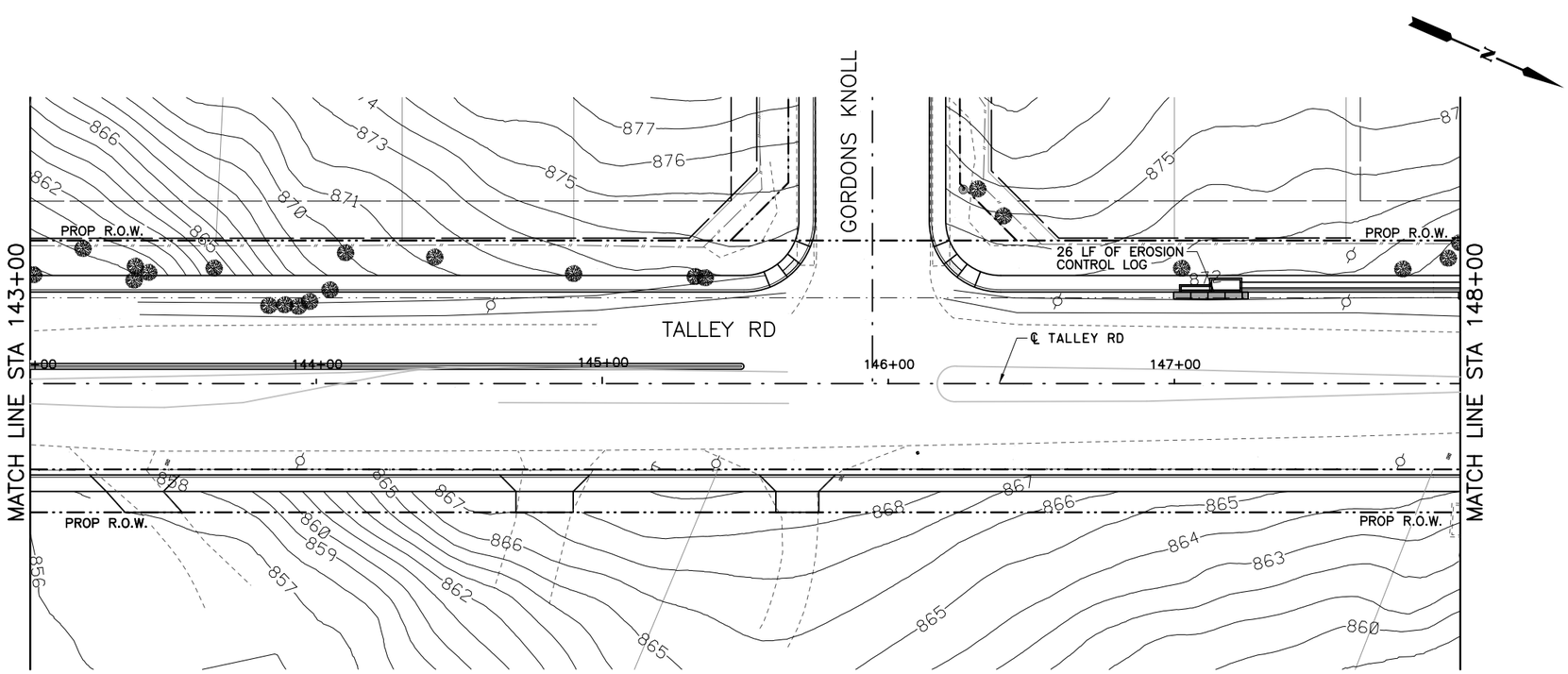

QUANTITY SUMMARY TALLEY RD.

TXDOT	ITEM	UNIT	QUANT
0506 6002	ROCK FILTER DAM (INSTALL)(TY 2)	LF	50
0506 6011	ROCK FILTER DAM (REMOVE)	LF	50
0506 6038	SEDIMENT CONTROL FENCE (INSTALL)	LF	170
0506 6039	SEDIMENT CONTROL FENCE (REMOVE)	LF	170
0506 6041	EROSION CONTROL LOG (INSTALL)	LF	110
0506 6043	EROSION CONTROL LOG (REMOVE)	LF	110

LEGEND

- SCF — SEDIMENT CONTROL FENCE
- RFD2 — ROCK FILTER DAM TY 2
- EROSION CONTROL LOG
- DITCH FLOW ARROWS
- TRAFFIC FLOW ARROWS
- EXISTING RIGHT-OF-WAY
- PROPOSED RIGHT-OF-WAY

HORIZ.
25 12.5 0 25 50
SCALE FEET

THIS DOCUMENT IS FOR INTERIM REVIEW AND IS NOT INTENDED FOR CONSTRUCTION, BIDDING, PERMIT OR OTHER UNAUTHORIZED PURPOSES. THESE DOCUMENTS/PLANS WERE AUTHORIZED TO BE RELEASED.

BY: BRYAN J. SPINA ,P.E.
LICENSE NO.: 103776 DATE: 2/21/2017

BEXAR COUNTY
PUBLIC WORKS DEPARTMENT

NO	DATE	DESCRIPTION	DWG	CHK

REVISIONS

CP&Y
T.B.P.E. FIRM # 1741

LNV
TBPE FIRM NO. F-306
TBPLS FIRM NO. 10126502
engineers | architects | surveyors
8918 TESORO DR., SUITE 401
SAN ANTONIO, TX 78217
PH. (210) 822-2232
FAX (210) 822-4032
WWW.LNVINC.COM

TALLEY ROAD
SW3P LAYOUT
PHASE 3
SHEET 5 OF 14

PROJECT NUMBER:		SHEET NO.
0849-01-046		531
DESIGNED BY: –	ROADWAY/HIGHWAY:	
CHECKED BY: –	TALLEY ROAD	
DRAWN BY: –	STATE	COUNTY
CHECKED BY: –	TEXAS	BEXAR

cpybw_ANSIB.tbl
cpypdf_ANSIB.pltcfg
pw:/Active Projects/BEXA14048.01/8.00 Plans and Drawings/8.30 Cut Sheets/8.3.13 SW3P/14048SW3P05_PH3.dgn
2/21/2017 5:12:13 PM bspina

CP&Y
CHECKPRINT

REVIEWER
Initial:
Date:
VERIFIED
Initial:
Date:
PROCESSED
Initial:
Date:
VERIFIED
Initial:
Date:

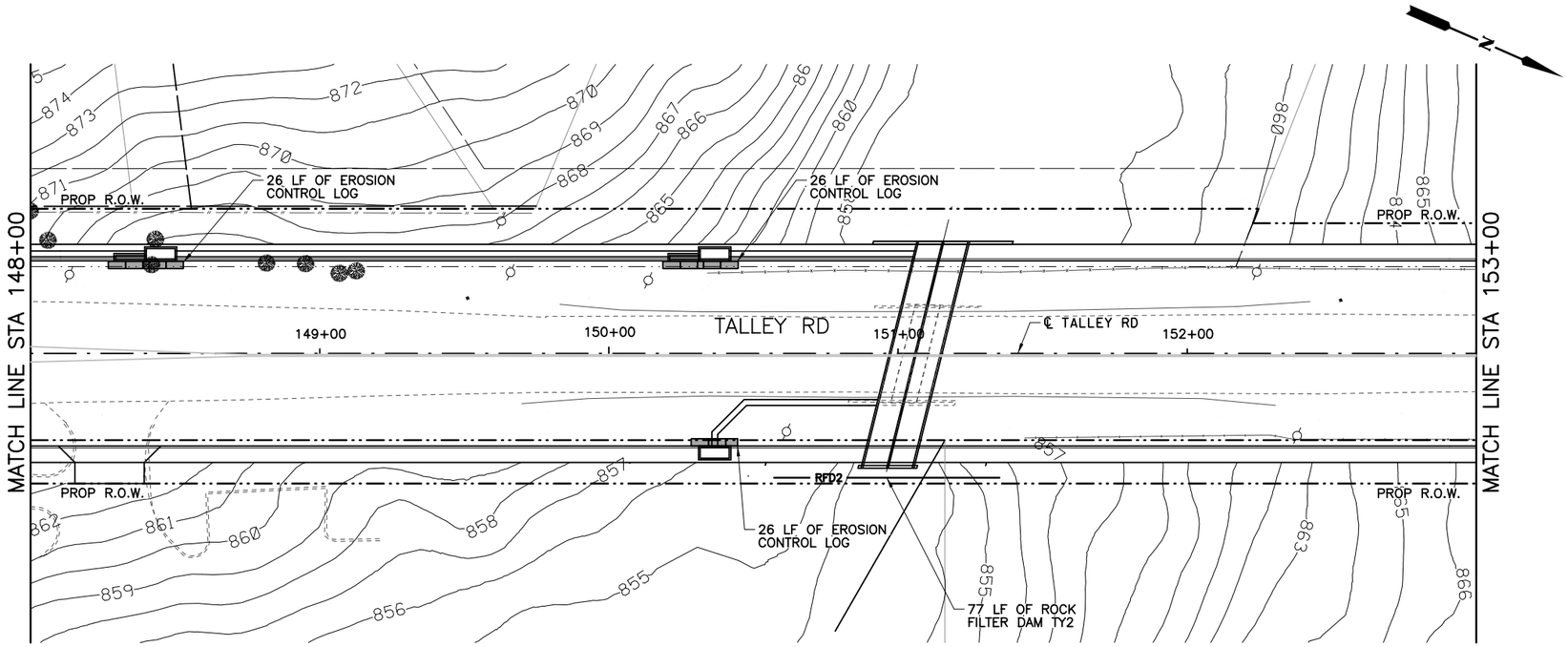

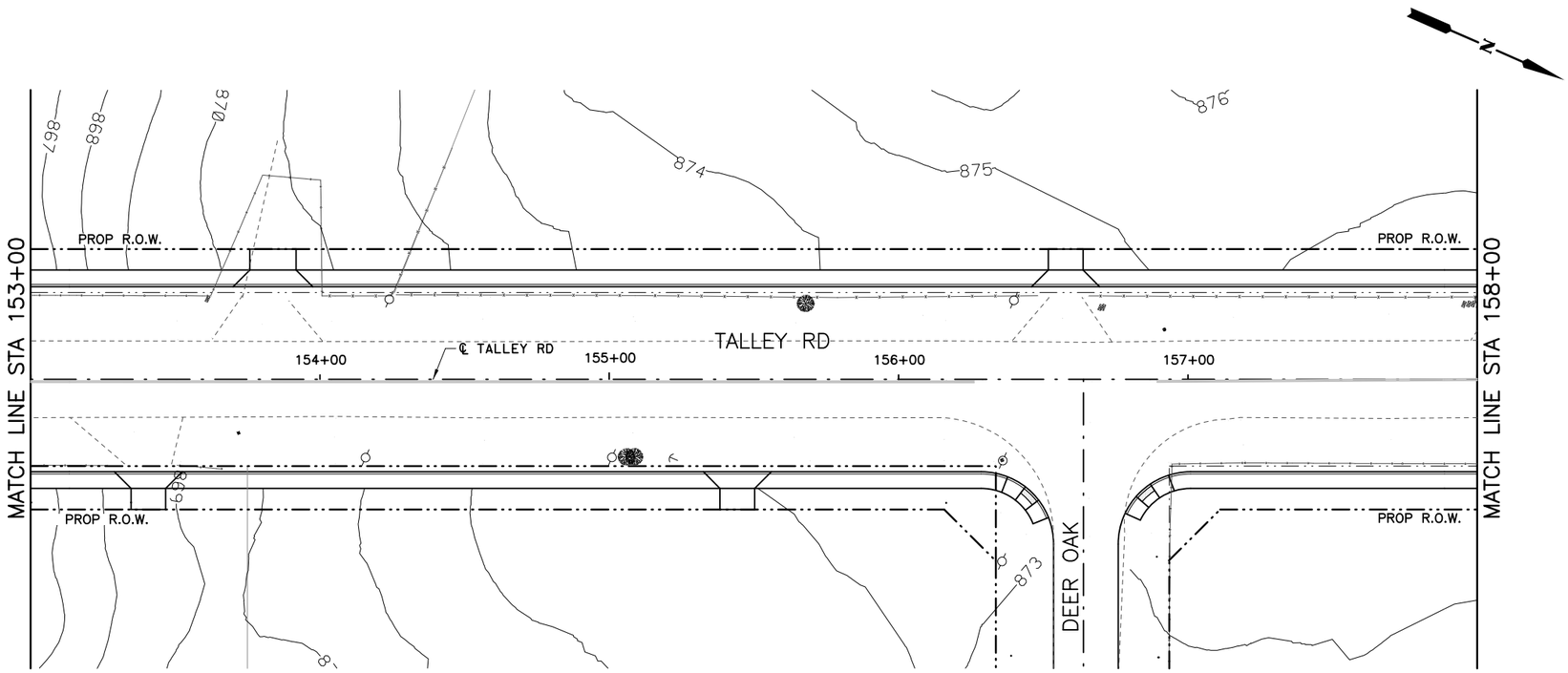

QUANTITY SUMMARY TALLEY RD.

TXDOT	ITEM	UNIT	QUANT
0506 6002	ROCK FILTER DAM (INSTALL)(TY 2)	LF	77
0506 6011	ROCK FILTER DAM (REMOVE)	LF	77
0506 6038	SEDIMENT CONTROL FENCE (INSTALL)	LF	0
0506 6039	SEDIMENT CONTROL FENCE (REMOVE)	LF	0
0506 6041	EROSION CONTROL LOG (INSTALL)	LF	78
0506 6043	EROSION CONTROL LOG (REMOVE)	LF	78

LEGEND

- SCF — SEDIMENT CONTROL FENCE
- RFD2 — ROCK FILTER DAM TY 2
- EROSION CONTROL LOG
- DITCH FLOW ARROWS
- TRAFFIC FLOW ARROWS
- EXISTING RIGHT-OF-WAY
- PROPOSED RIGHT-OF-WAY

HORIZ.
25 12.5 0 25 50
SCALE FEET

THIS DOCUMENT IS FOR INTERIM REVIEW AND IS NOT INTENDED FOR CONSTRUCTION, BIDDING, PERMIT OR OTHER UNAUTHORIZED PURPOSES. THESE DOCUMENTS/PLANS WERE AUTHORIZED TO BE RELEASED.

BY: BRYAN J. SPINA ,P.E.
LICENSE NO.: 103776 DATE: 2/21/2017

BEXAR COUNTY
PUBLIC WORKS DEPARTMENT

NO	DATE	DESCRIPTION	DWG	CHK

REVISIONS

CP&Y
T.B.P.E. FIRM # 1741

LNV
engineers | architects | surveyors
8918 TESORO DR., SUITE 401
SAN ANTONIO, TX 78217
WWW.LNVINC.COM
TBPE FIRM NO. F-306
TBPLS FIRM NO. 10126502
PH. (210) 822-2232
FAX (210) 822-4032

TALLEY ROAD
SW3P LAYOUT
PHASE 3
SHEET 6 OF 14

PROJECT NUMBER:		SHEET NO.
0849-01-046		532
DESIGNED BY: –	ROADWAY/HIGHWAY:	
CHECKED BY: –	TALLEY ROAD	
DRAWN BY: –	STATE	COUNTY
CHECKED BY: –	TEXAS	BEXAR

CP&Y
CHECKPRINT

REVIEWER
Initial:
Date:
VERIFIED
Initial:
Date:
PROCESSED
Initial:
Date:
VERIFIED
Initial:
Date:

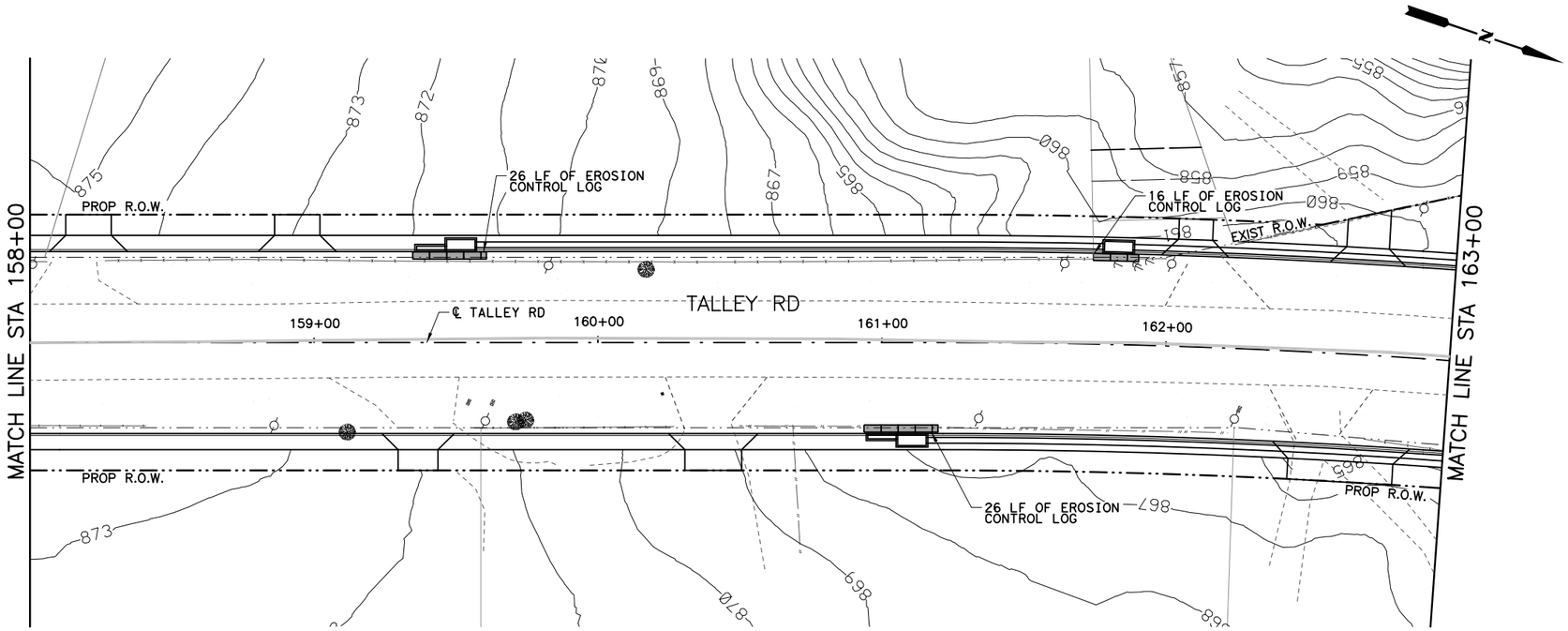

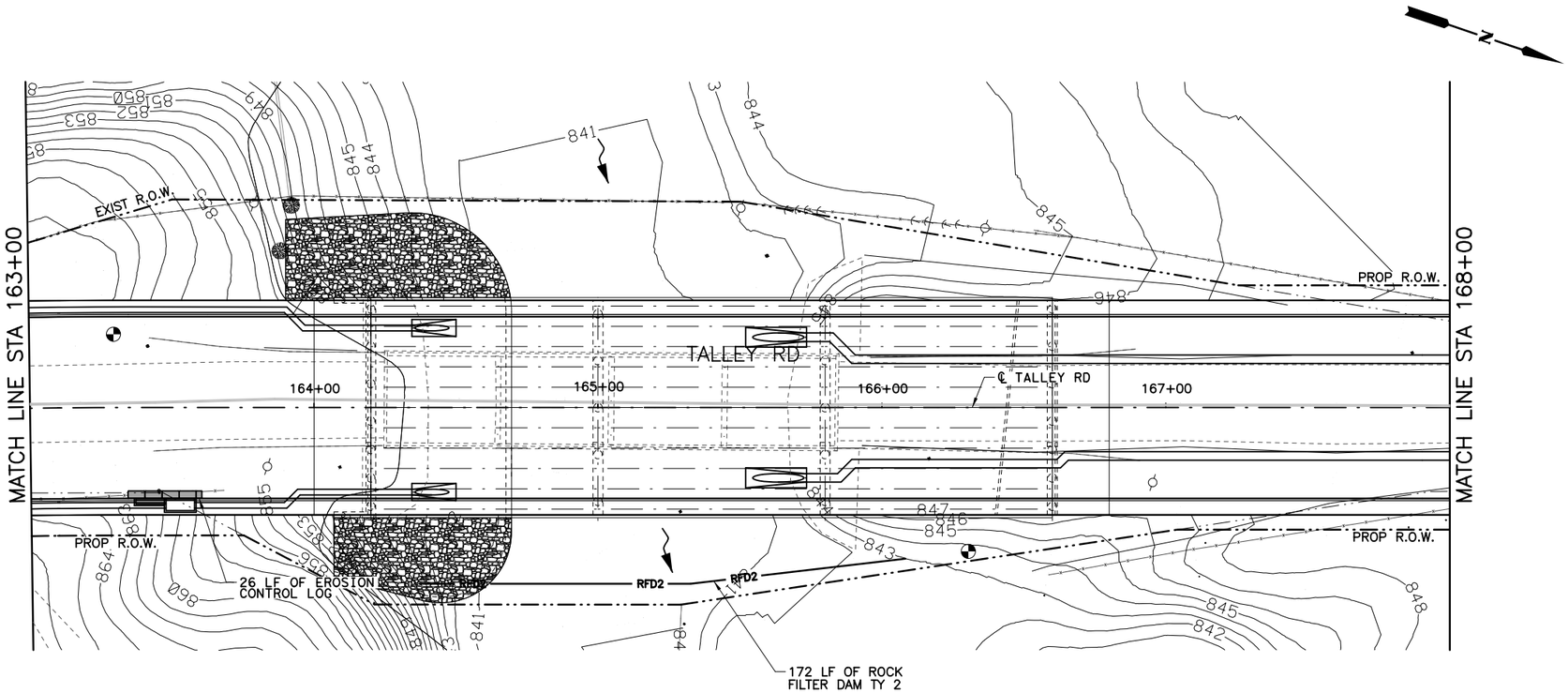

QUANTITY SUMMARY TALLEY RD.

TXDOT	ITEM	UNIT	QUANT
0506 6002	ROCK FILTER DAM (INSTALL)(TY 2)	LF	172
0506 6011	ROCK FILTER DAM (REMOVE)	LF	172
0506 6038	SEDIMENT CONTROL FENCE (INSTALL)	LF	0
0506 6039	SEDIMENT CONTROL FENCE (REMOVE)	LF	0
0506 6041	EROSION CONTROL LOG (INSTALL)	LF	94
0506 6043	EROSION CONTROL LOG (REMOVE)	LF	94

LEGEND

- SCF — SEDIMENT CONTROL FENCE
- RFD2 — ROCK FILTER DAM TY 2
- EROSION CONTROL LOG
- DITCH FLOW ARROWS
- TRAFFIC FLOW ARROWS
- EXISTING RIGHT-OF-WAY
- PROPOSED RIGHT-OF-WAY

HORIZ.
25 12.5 0 25 50
SCALE FEET

THIS DOCUMENT IS FOR INTERIM REVIEW AND IS NOT INTENDED FOR CONSTRUCTION, BIDDING, PERMIT OR OTHER UNAUTHORIZED PURPOSES. THESE DOCUMENTS/PLANS WERE AUTHORIZED TO BE RELEASED.

BY: BRYAN J. SPINA ,P.E.
LICENSE NO.: 103776 DATE: 2/21/2017

BEXAR COUNTY
PUBLIC WORKS DEPARTMENT

NO	DATE	DESCRIPTION	DWG	CHK

REVISIONS

CP&Y
T.B.P.E. FIRM # 1741

LNV
TBPE FIRM NO. F-306
TBPLS FIRM NO. 10126502
engineers | architects | surveyors
8918 TESORO DR., SUITE 401
SAN ANTONIO, TX 78217
PH. (210) 822-2232
FAX (210) 822-4032
WWW.LNVINC.COM

TALLEY ROAD
SW3P LAYOUT
PHASE 3
SHEET 7 OF 14

PROJECT NUMBER:		SHEET NO.
0849-01-046		533
DESIGNED BY: –	ROADWAY/HIGHWAY:	
CHECKED BY: –	TALLEY ROAD	
DRAWN BY: –	STATE	COUNTY
CHECKED BY: –	TEXAS	BEXAR

cpybw_ANSIB.tbl
cpypdf_ANSIB.pltcfg
pw:/Active Projects/BEXA14048.01/8.00 Plans and Drawings/8.30 Cut Sheets/8.3.13 SW3P/14048SW3P07_PH3.dgn
2/21/2017 5:12:28 PM bspina

CP&Y CHECKPRINT

REVIEWER
Initial:
Date:
VERIFIED
Initial:
Date:
PROCESSED
Initial:
Date:
VERIFIED
Initial:
Date:

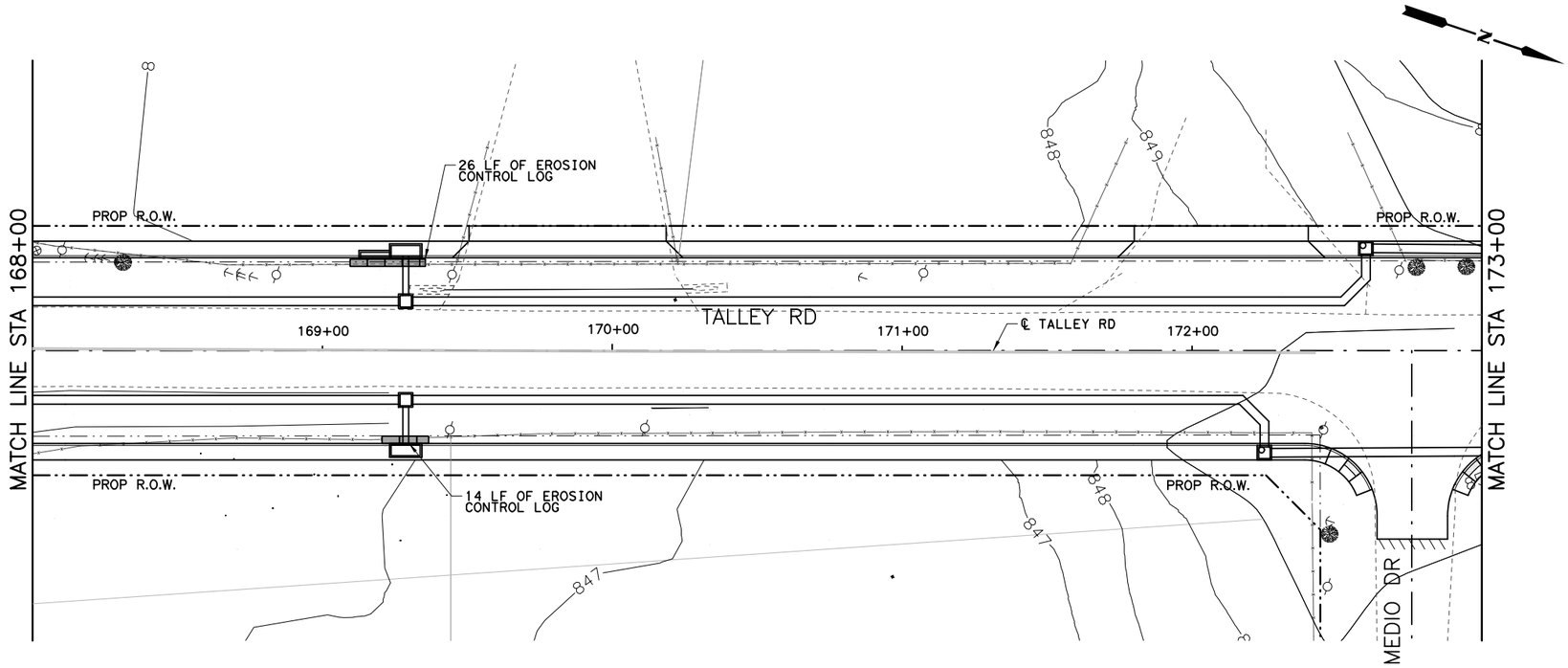

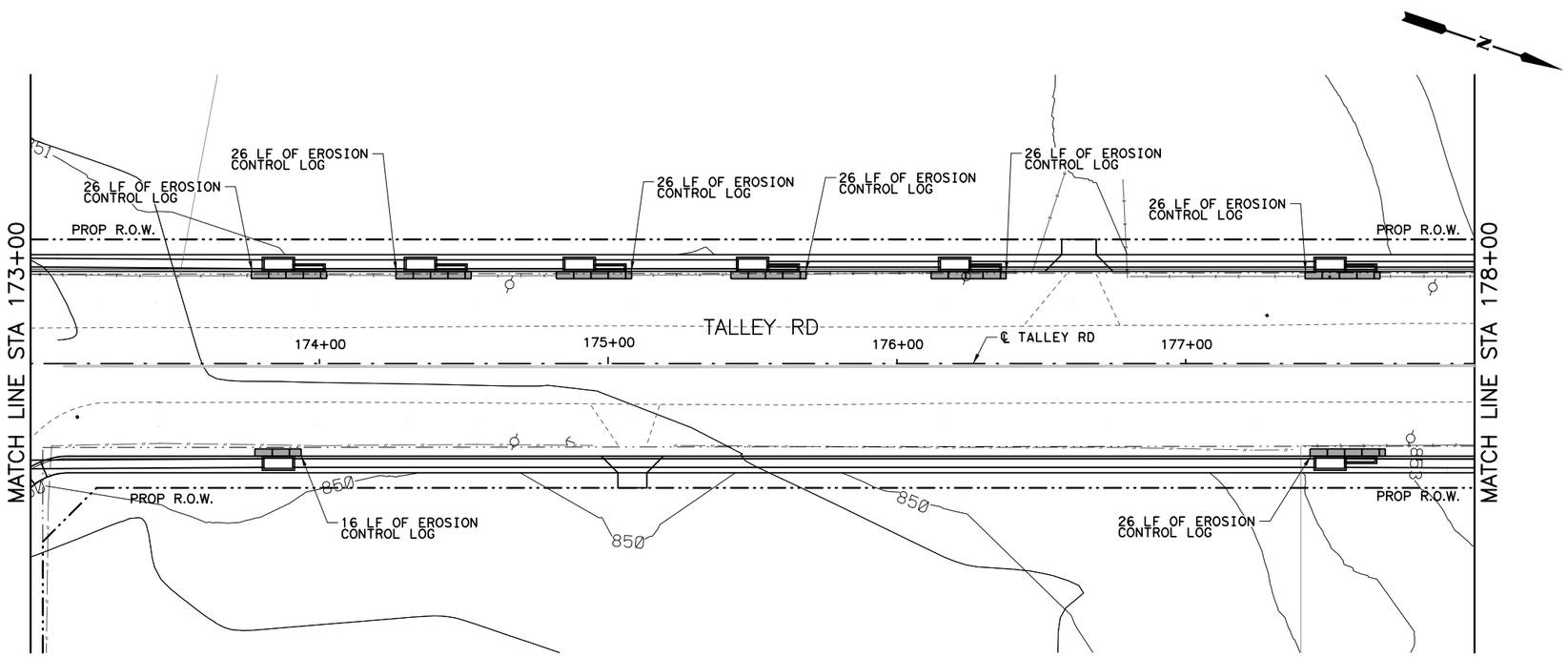

QUANTITY SUMMARY TALLEY RD.

TXDOT	ITEM	UNIT	QUANT
0506 6002	ROCK FILTER DAM (INSTALL)(TY 2)	LF	0
0506 6011	ROCK FILTER DAM (REMOVE)	LF	0
0506 6038	SEDIMENT CONTROL FENCE (INSTALL)	LF	0
0506 6039	SEDIMENT CONTROL FENCE (REMOVE)	LF	0
0506 6041	EROSION CONTROL LOG (INSTALL)	LF	238
0506 6043	EROSION CONTROL LOG (REMOVE)	LF	238

LEGEND

- SCF — SEDIMENT CONTROL FENCE
- RFD2 — ROCK FILTER DAM TY 2
- EROSION CONTROL LOG
- DITCH FLOW ARROWS
- TRAFFIC FLOW ARROWS
- EXISTING RIGHT-OF-WAY
- PROPOSED RIGHT-OF-WAY

HORIZ.

25 12.5 0 25 50

SCALE FEET

THIS DOCUMENT IS FOR INTERIM REVIEW AND IS NOT INTENDED FOR CONSTRUCTION, BIDDING, PERMIT OR OTHER UNAUTHORIZED PURPOSES. THESE DOCUMENTS/PLANS WERE AUTHORIZED TO BE RELEASED.

BY: BRYAN J. SPINA ,P.E.

LICENSE NO.: 103776 DATE: 2/21/2017

BEXAR COUNTY
PUBLIC WORKS DEPARTMENT

NO	DATE	DESCRIPTION	DWG	CHK

REVISIONS

CP&Y T.B.P.E. FIRM # 1741

LNV engineers | architects | surveyors
TBPE FIRM NO. F-306
TBPLS FIRM NO. 10126502
8918 TESORO DR., SUITE 401
SAN ANTONIO, TX 78217
PH. (210) 822-2232
FAX (210) 822-4032
WWW.LNVINC.COM

TALLEY ROAD

SW3P LAYOUT
PHASE 3
SHEET 8 OF 14

PROJECT NUMBER:		SHEET NO.
0849-01-046		534
DESIGNED BY: –	ROADWAY/HIGHWAY:	
CHECKED BY: –	TALLEY ROAD	
DRAWN BY: –	STATE	COUNTY
CHECKED BY: –	TEXAS	BEXAR

cpybw_ANSIB.tbl
cpypdf_ANSIB.pltcfg
pw:/Active Projects/BEXA14048.01/8.00 Plans and Drawings/8.30 Cut Sheets/8.3.13 SW3P/14048SW3P08_PH3.dgn
2/21/2017 5:12:35 PM bspina

CP&Y
CHECKPRINT

REVIEWER
Initial:
Date:
VERIFIED
Initial:
Date:
PROCESSED
Initial:
Date:
VERIFIED
Initial:
Date:

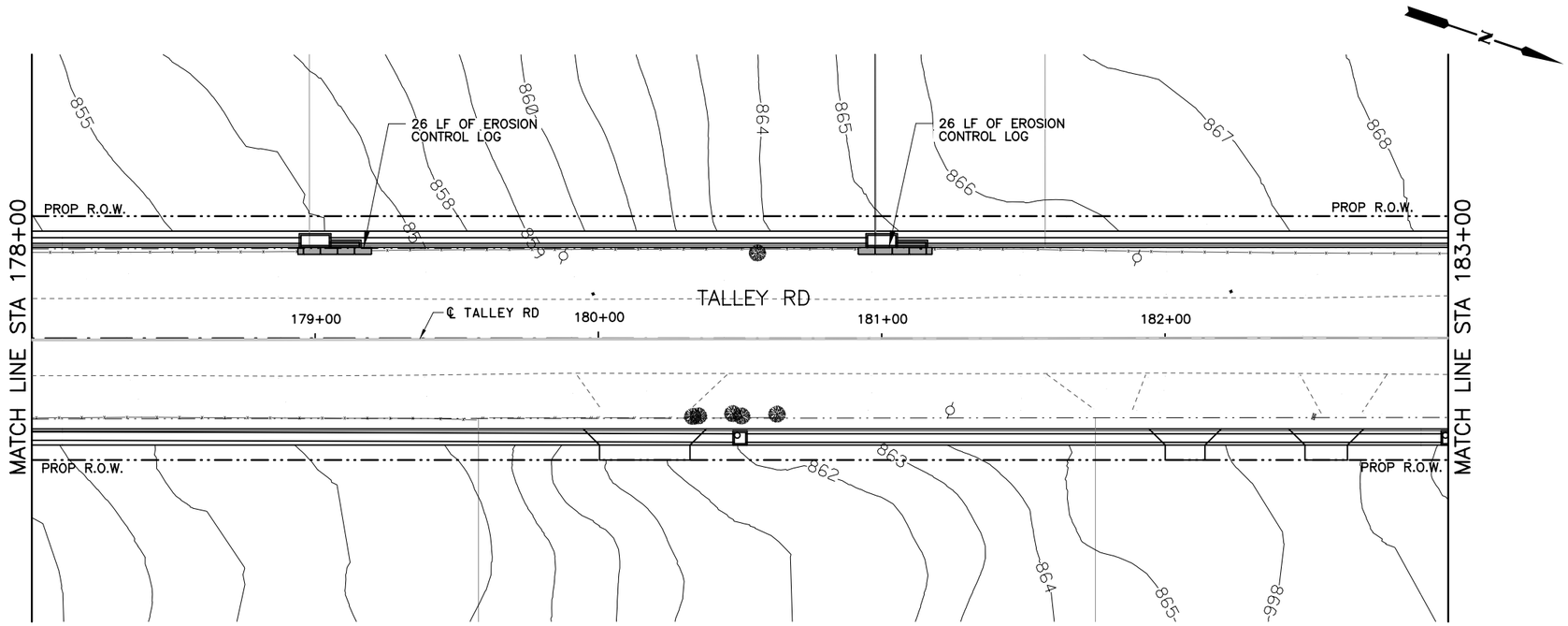

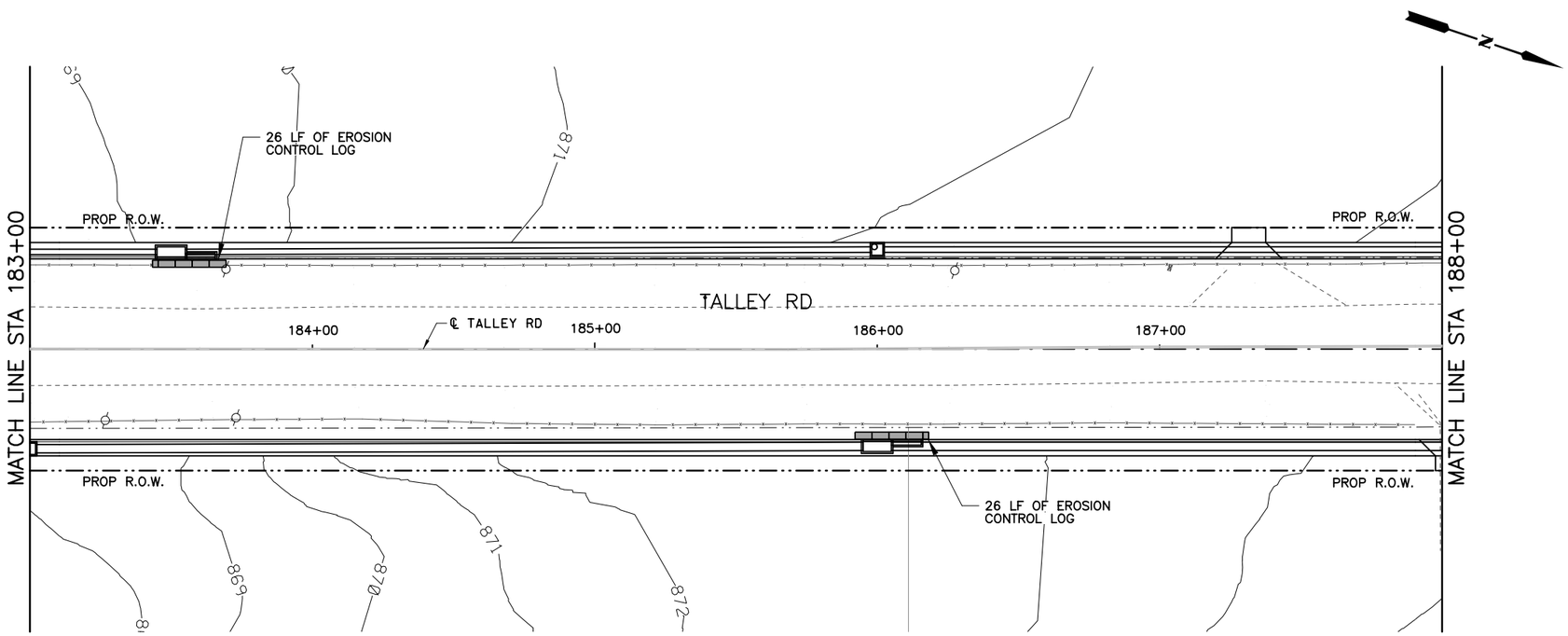

QUANTITY SUMMARY TALLEY RD.

TXDOT	ITEM	UNIT	QUANT
0506 6002	ROCK FILTER DAM (INSTALL)(TY 2)	LF	0
0506 6011	ROCK FILTER DAM (REMOVE)	LF	0
0506 6038	SEDIMENT CONTROL FENCE (INSTALL)	LF	0
0506 6039	SEDIMENT CONTROL FENCE (REMOVE)	LF	0
0506 6041	EROSION CONTROL LOG (INSTALL)	LF	104
0506 6043	EROSION CONTROL LOG (REMOVE)	LF	104

LEGEND

- SCF — SEDIMENT CONTROL FENCE
- RFD2 — ROCK FILTER DAM TY 2
- EROSION CONTROL LOG
- DITCH FLOW ARROWS
- TRAFFIC FLOW ARROWS
- EXISTING RIGHT-OF-WAY
- PROPOSED RIGHT-OF-WAY

HORIZ.
25 12.5 0 25 50
SCALE FEET

THIS DOCUMENT IS FOR INTERIM REVIEW AND IS NOT INTENDED FOR CONSTRUCTION, BIDDING, PERMIT OR OTHER UNAUTHORIZED PURPOSES. THESE DOCUMENTS/PLANS WERE AUTHORIZED TO BE RELEASED.

BY: BRYAN J. SPINA ,P.E.
LICENSE NO.: 103776 DATE: 2/21/2017

BEXAR COUNTY
PUBLIC WORKS DEPARTMENT

NO	DATE	DESCRIPTION	DWG	CHK

REVISIONS

CP&Y
T.B.P.E. FIRM # 1741

LNV
TBPE FIRM NO. F-366
TBPLS FIRM NO. 10126502
engineers | architects | surveyors
8918 TESORO DR., SUITE 401
SAN ANTONIO, TX 78217
WWW.LNVINC.COM
PH. (210) 822-2232
FAX (210) 822-4032

TALLEY ROAD
SW3P LAYOUT
PHASE 3
SHEET 9 OF 14

PROJECT NUMBER:		SHEET NO.
0849-01-046		535
DESIGNED BY: –	ROADWAY/HIGHWAY:	
CHECKED BY: –	TALLEY ROAD	
DRAWN BY: –	STATE	COUNTY
CHECKED BY: –	TEXAS	BEXAR

cpybw_ANSIB.tbl
cppdf_ANSIB.pltcfg
pw:/Active Projects/BEXA14048.01/8.00 Plans and Drawings/8.30 Cut Sheets/8.3.13 SW3P/14048SW3P09_PH3.dgn
2/21/2017 5:12:42 PM bspina

CP&Y
CHECKPRINT

REVIEWER
Initial:
Date:
VERIFIED
Initial:
Date:
PROCESSED
Initial:
Date:
VERIFIED
Initial:
Date:

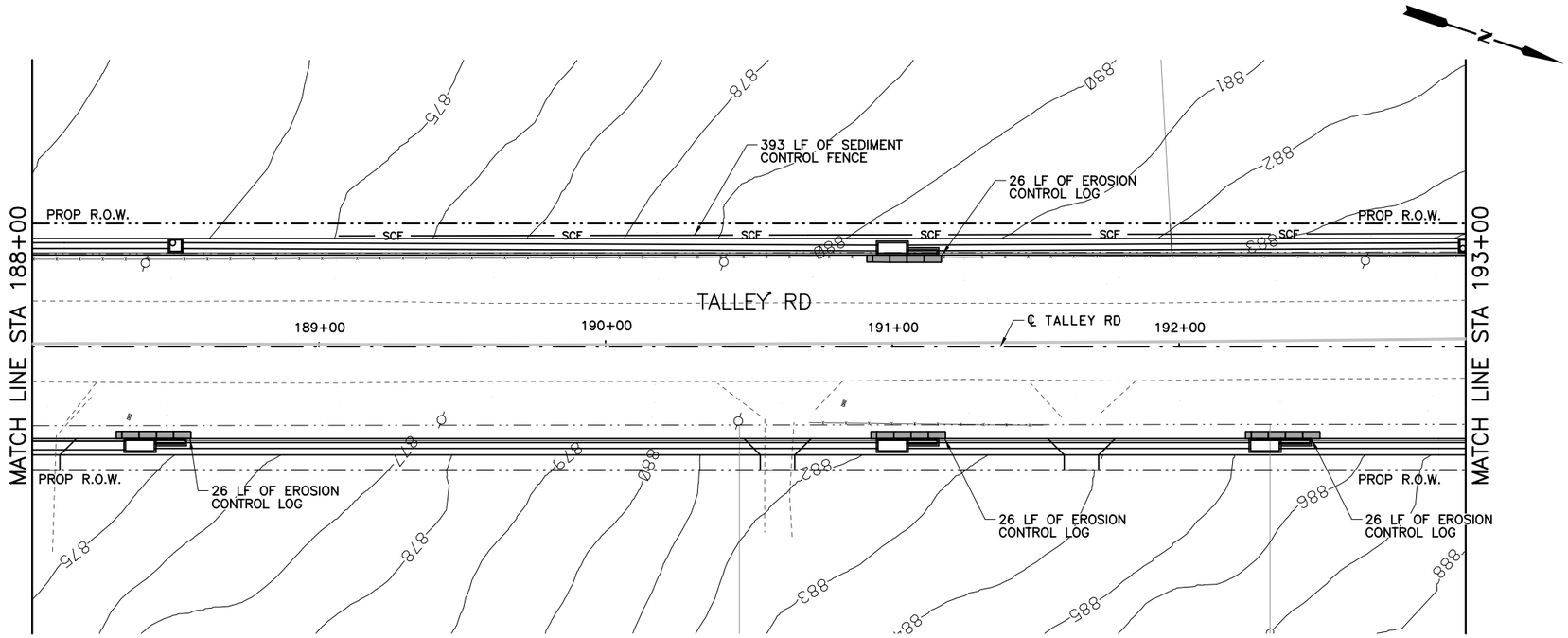

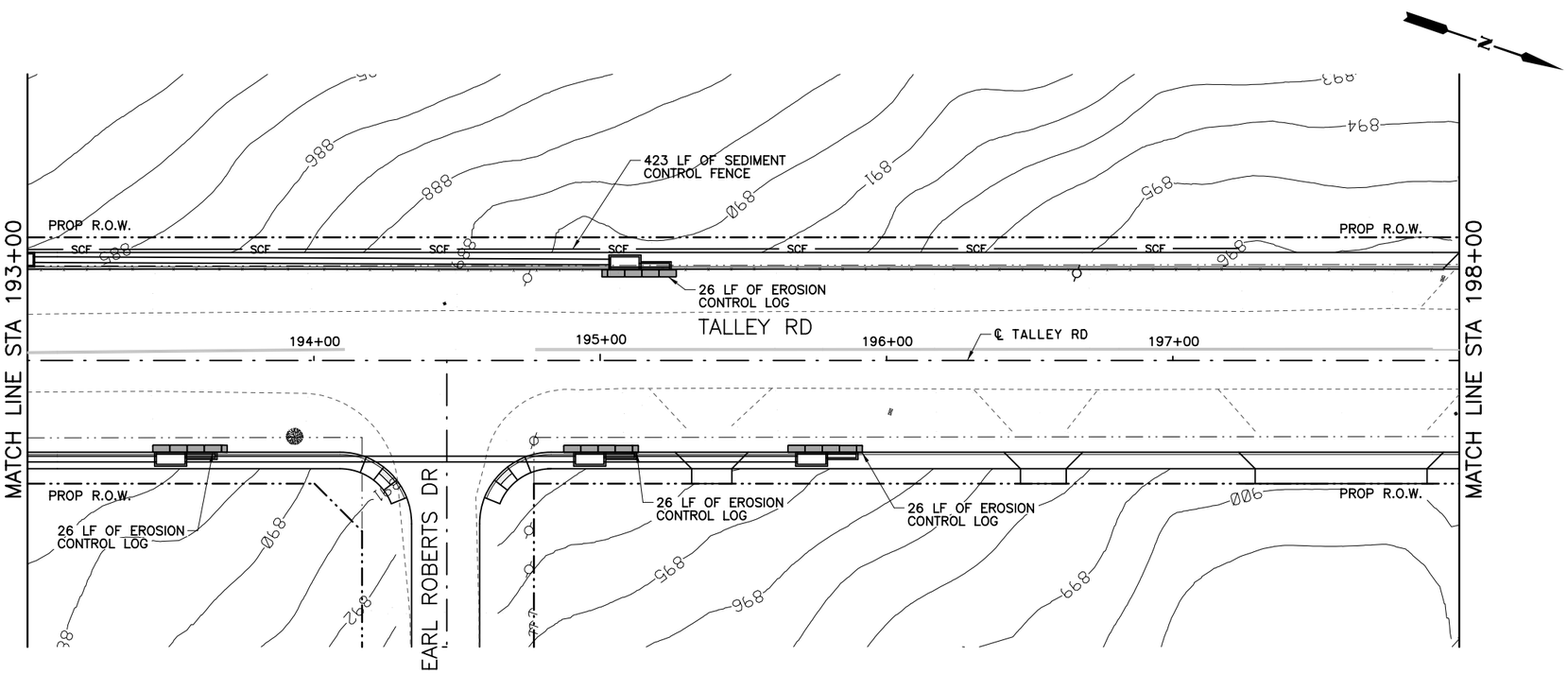

QUANTITY SUMMARY TALLEY RD.			
TXDOT	ITEM	UNIT	QUANT
0506 6002	ROCK FILTER DAM (INSTALL)(TY 2)	LF	0
0506 6011	ROCK FILTER DAM (REMOVE)	LF	0
0506 6038	SEDIMENT CONTROL FENCE (INSTALL)	LF	816
0506 6039	SEDIMENT CONTROL FENCE (REMOVE)	LF	816
0506 6041	EROSION CONTROL LOG (INSTALL)	LF	208
0506 6043	EROSION CONTROL LOG (REMOVE)	LF	208

LEGEND

- SCF — SEDIMENT CONTROL FENCE
- RFD2 — ROCK FILTER DAM TY 2
- EROSION CONTROL LOG
- DITCH FLOW ARROWS
- TRAFFIC FLOW ARROWS
- EXISTING RIGHT-OF-WAY
- PROPOSED RIGHT-OF-WAY

HORIZ.
25 12.5 0 25 50
SCALE FEET

THIS DOCUMENT IS FOR INTERIM REVIEW AND IS NOT INTENDED FOR CONSTRUCTION, BIDDING, PERMIT OR OTHER UNAUTHORIZED PURPOSES. THESE DOCUMENTS/PLANS WERE AUTHORIZED TO BE RELEASED.

BY: BRYAN J. SPINA ,P.E.
LICENSE NO.: 103776 DATE: 2/21/2017

BEXAR COUNTY
PUBLIC WORKS DEPARTMENT

NO	DATE	DESCRIPTION	DWG	CHK

REVISIONS

CP&Y
T.B.P.E. FIRM # 1741

LNV
TBPE FIRM NO. F-306
TBPLS FIRM NO. 10126502
engineers | architects | surveyors
8918 TESORO DR., SUITE 401
SAN ANTONIO, TX 78217
PH. (210) 822-2232
FAX (210) 822-4032
WWW.LNVINC.COM

TALLEY ROAD
SW3P LAYOUT
PHASE 3
SHEET 10 OF 14

PROJECT NUMBER:		SHEET NO.
0849-01-046		536
DESIGNED BY: –	ROADWAY/HIGHWAY:	
CHECKED BY: –	TALLEY ROAD	
DRAWN BY: –	STATE	COUNTY
CHECKED BY: –	TEXAS	BEXAR

cpybw_ANSIB.tbl
cppdf_ANSIB.pltcfg
pw:/Active Projects/BEXA14048.01/8.00 Plans and Drawings/8.30 Cut Sheets/8.3.13 SW3P/14048SW3P10_PH3.dgn
2/21/2017 5:12:49 PM bspina

CP&Y
CHECKPRINT

REVIEWER
Initial:
Date:
VERIFIED
Initial:
Date:
PROCESSED
Initial:
Date:
VERIFIED
Initial:
Date:

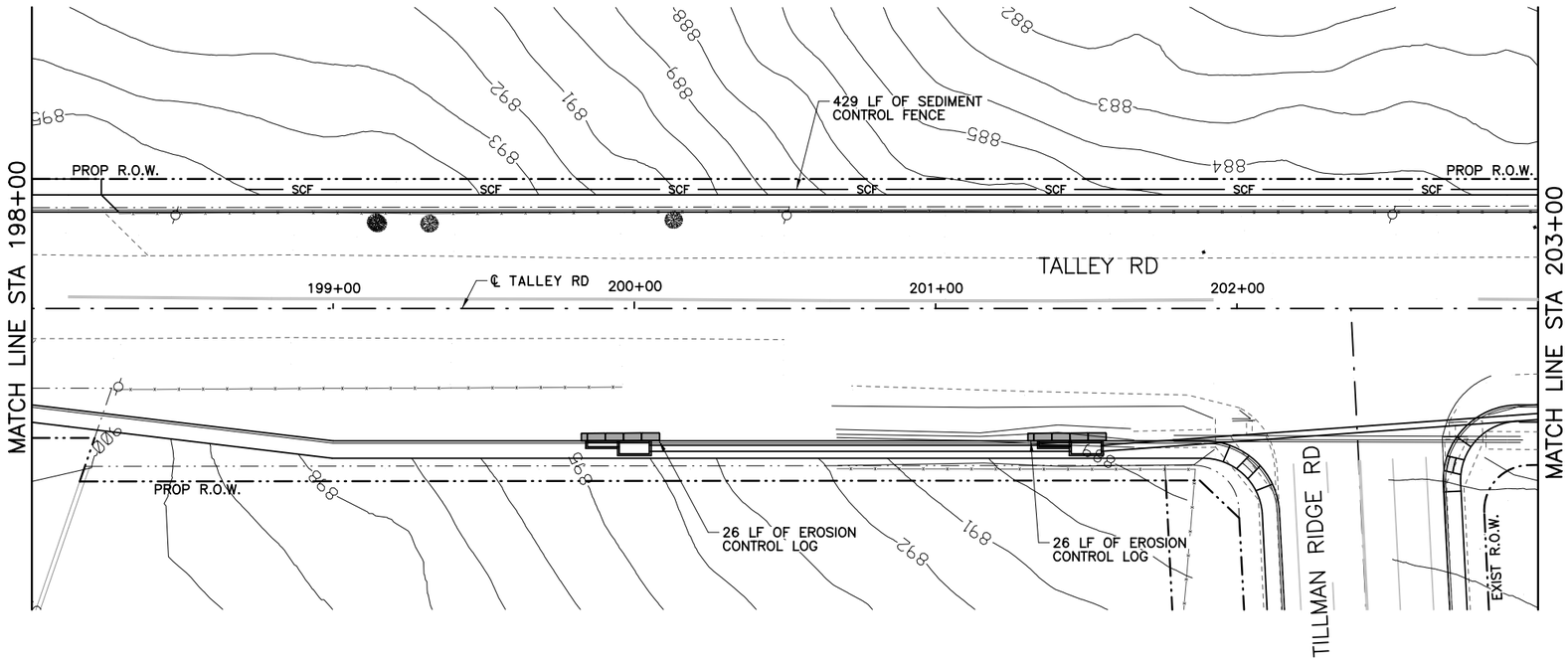

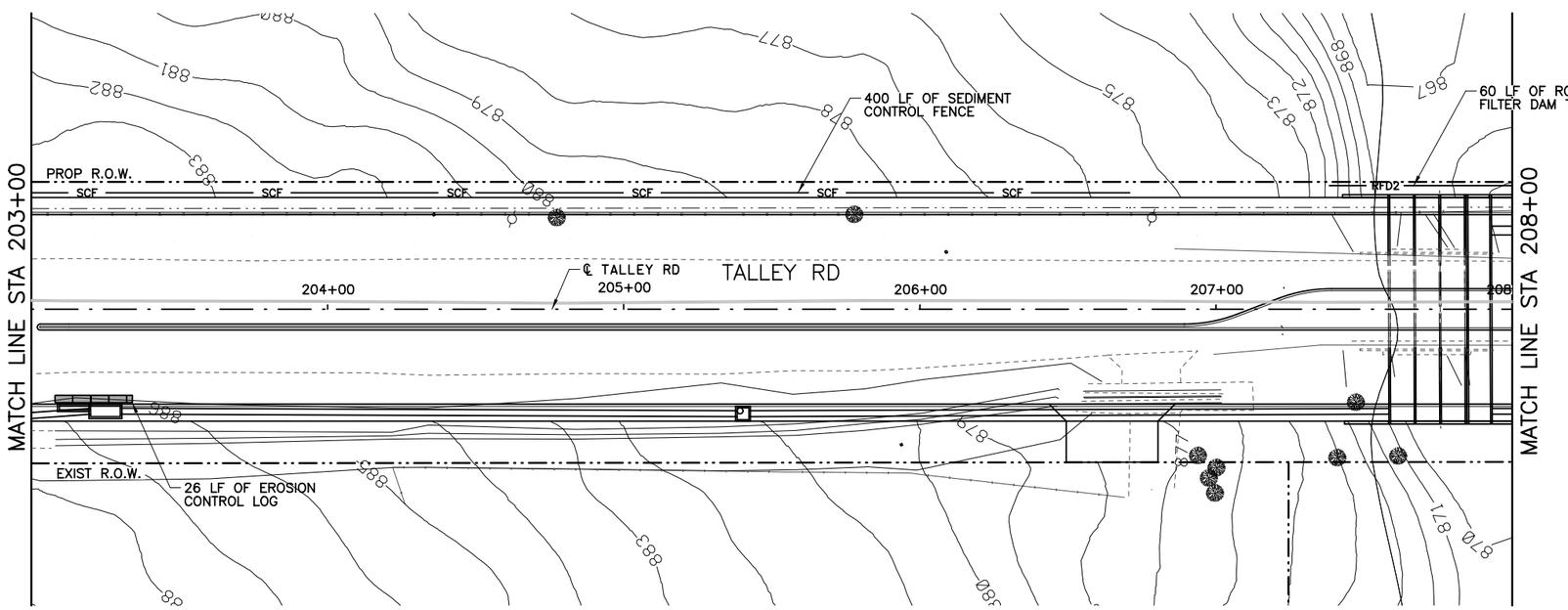

QUANTITY SUMMARY TALLEY RD.

TXDOT	ITEM	UNIT	QUANT
0506 6002	ROCK FILTER DAM (INSTALL)(TY 2)	LF	60
0506 6011	ROCK FILTER DAM (REMOVE)	LF	60
0506 6038	SEDIMENT CONTROL FENCE (INSTALL)	LF	829
0506 6039	SEDIMENT CONTROL FENCE (REMOVE)	LF	829
0506 6041	EROSION CONTROL LOG (INSTALL)	LF	78
0506 6043	EROSION CONTROL LOG (REMOVE)	LF	78

LEGEND

- SCF — SEDIMENT CONTROL FENCE
- RFD2 — ROCK FILTER DAM TY 2
- EROSION CONTROL LOG
- DITCH FLOW ARROWS
- TRAFFIC FLOW ARROWS
- EXISTING RIGHT-OF-WAY
- PROPOSED RIGHT-OF-WAY

HORIZ.
25 12.5 0 25 50
SCALE FEET

THIS DOCUMENT IS FOR INTERIM REVIEW AND IS NOT INTENDED FOR CONSTRUCTION, BIDDING, PERMIT OR OTHER UNAUTHORIZED PURPOSES. THESE DOCUMENTS/PLANS WERE AUTHORIZED TO BE RELEASED.

BY: BRYAN J. SPINA ,P.E.
LICENSE NO.: 103776 DATE: 2/21/2017

BEXAR COUNTY
PUBLIC WORKS DEPARTMENT

NO	DATE	DESCRIPTION	DWG	CHK

REVISIONS

CP&Y
T.B.P.E. FIRM # 1741

LNV
TBPE FIRM NO. F-366
TBPLS FIRM NO. 10126502
engineers | architects | surveyors
8918 TESORO DR., SUITE 401
SAN ANTONIO, TX 78217
PH. (210) 822-2232
FAX (210) 822-4032
WWW.LNVINC.COM

TALLEY ROAD
SW3P LAYOUT
PHASE 3
SHEET 11 OF 14

PROJECT NUMBER:		SHEET NO.
0849-01-046		537
DESIGNED BY: –	ROADWAY/HIGHWAY:	
CHECKED BY: –	TALLEY ROAD	
DRAWN BY: –	STATE	COUNTY
CHECKED BY: –	TEXAS	BEXAR

cpybw_ANSIB.tbl
cpypdf_ANSIB.pltcfg
pw:/Active Projects/BEXA14048.01/8.00 Plans and Drawings/8.30 Cut Sheets/8.3.13 SW3P/14048SW3P11_PH3.dgn
2/21/2017 5:12:56 PM bspina

CP&Y
CHECKPRINT

REVIEWER
Initial:
Date:
VERIFIED
Initial:
Date:
PROCESSED
Initial:
Date:
VERIFIED
Initial:
Date:

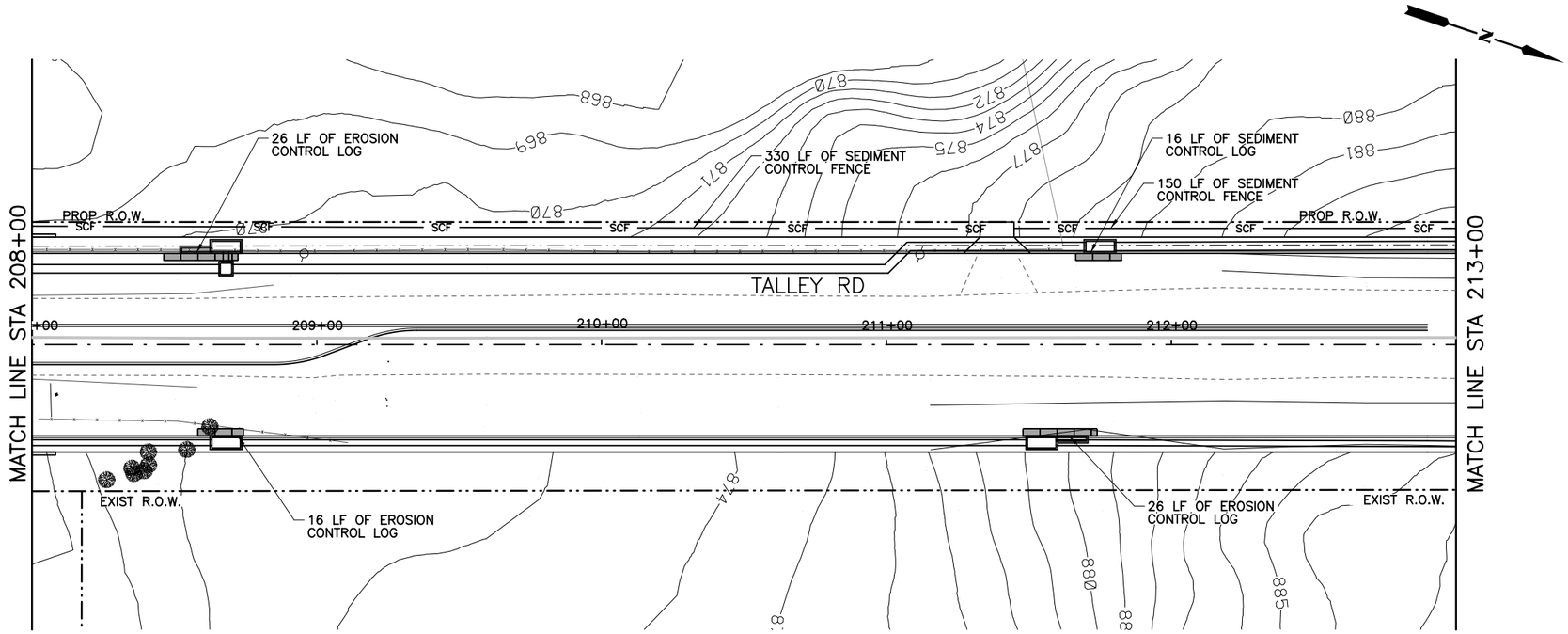

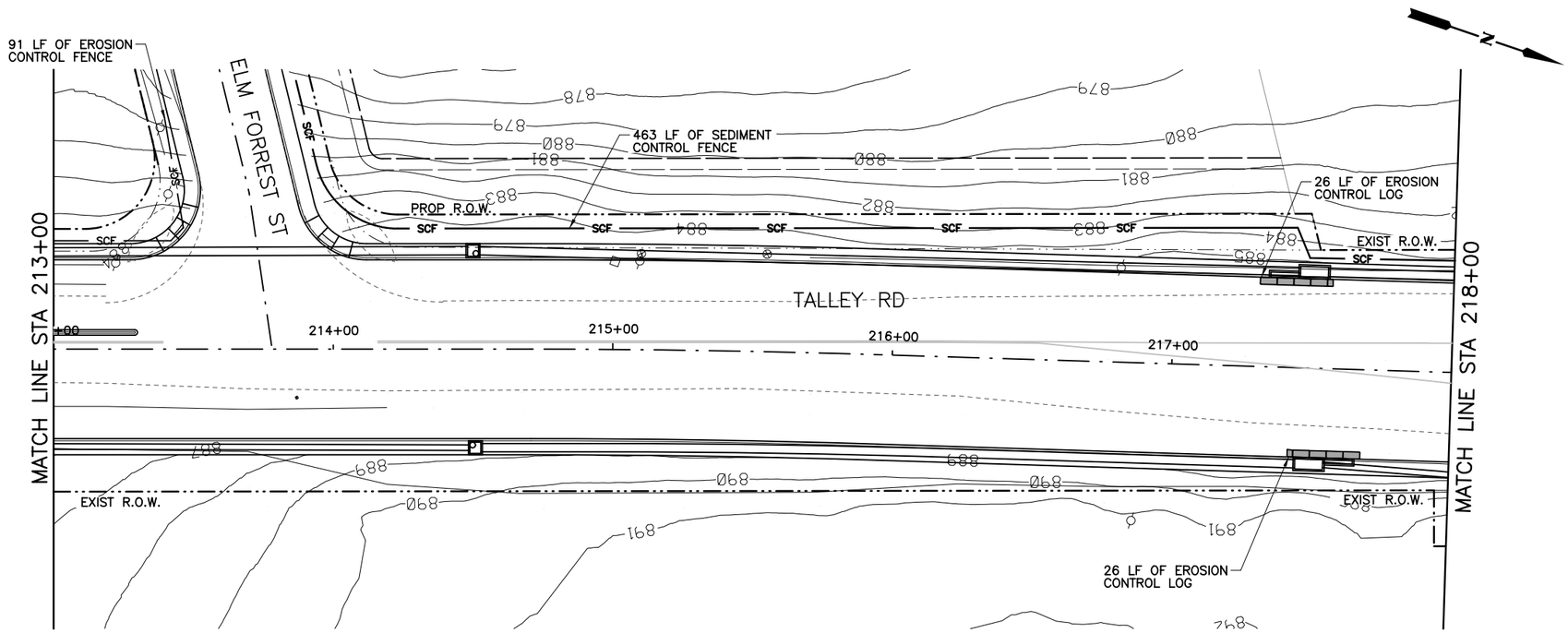

QUANTITY SUMMARY TALLEY RD.

TXDOT	ITEM	UNIT	QUANT
0506 6002	ROCK FILTER DAM (INSTALL)(TY 2)	LF	0
0506 6011	ROCK FILTER DAM (REMOVE)	LF	0
0506 6038	SEDIMENT CONTROL FENCE (INSTALL)	LF	1,034
0506 6039	SEDIMENT CONTROL FENCE (REMOVE)	LF	1,034
0506 6041	EROSION CONTROL LOG (INSTALL)	LF	136
0506 6043	EROSION CONTROL LOG (REMOVE)	LF	136

LEGEND

- SCF — SEDIMENT CONTROL FENCE
- RFD2 — ROCK FILTER DAM TY 2
- EROSION CONTROL LOG
- DITCH FLOW ARROWS
- TRAFFIC FLOW ARROWS
- EXISTING RIGHT-OF-WAY
- PROPOSED RIGHT-OF-WAY

HORIZ.
25 12.5 0 25 50
SCALE FEET

THIS DOCUMENT IS FOR INTERIM REVIEW AND IS NOT INTENDED FOR CONSTRUCTION, BIDDING, PERMIT OR OTHER UNAUTHORIZED PURPOSES. THESE DOCUMENTS/PLANS WERE AUTHORIZED TO BE RELEASED.

BY: BRYAN J. SPINA ,P.E.
LICENSE NO.: 103776 DATE: 2/21/2017

BEXAR COUNTY
PUBLIC WORKS DEPARTMENT

NO	DATE	DESCRIPTION	DWG	CHK

REVISIONS

CP&Y
T.B.P.E. FIRM # 1741

LNV
TBPE FIRM NO. F-366
TBPLS FIRM NO. 10126502
engineers | architects | surveyors
8918 TESORO DR., SUITE 401
SAN ANTONIO, TX 78217
PH. (210) 822-2232
FAX (210) 822-4032
WWW.LNVINC.COM

TALLEY ROAD
SW3P LAYOUT
PHASE 3
SHEET 12 OF 14

PROJECT NUMBER:		SHEET NO.
0849-01-046		538
DESIGNED BY: –	ROADWAY/HIGHWAY:	
CHECKED BY: –	TALLEY ROAD	
DRAWN BY: –	STATE	COUNTY
CHECKED BY: –	TEXAS	BEXAR

cpybw_ANSIB.tbl
cpypdf_ANSIB.pltcfg
pw:/Active Projects/BEXA14048.01/8.00 Plans and Drawings/8.30 Cut Sheets/8.3.13 SW3P/14048SW3P12_PH3.dgn
2/21/2017 5:13:03 PM bspina

CP&Y
CHECKPRINT

REVIEWER
Initial:
Date:
VERIFIED
Initial:
Date:
PROCESSED
Initial:
Date:
VERIFIED
Initial:
Date:

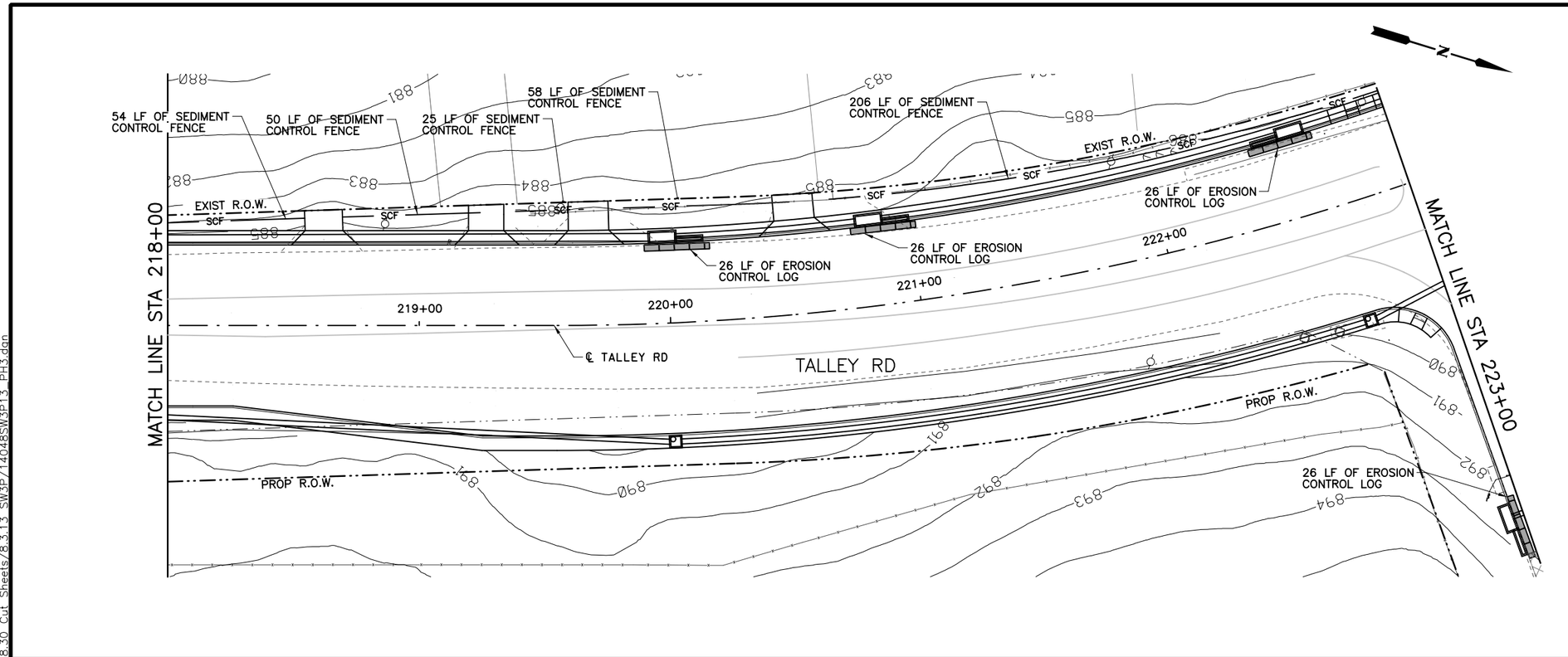

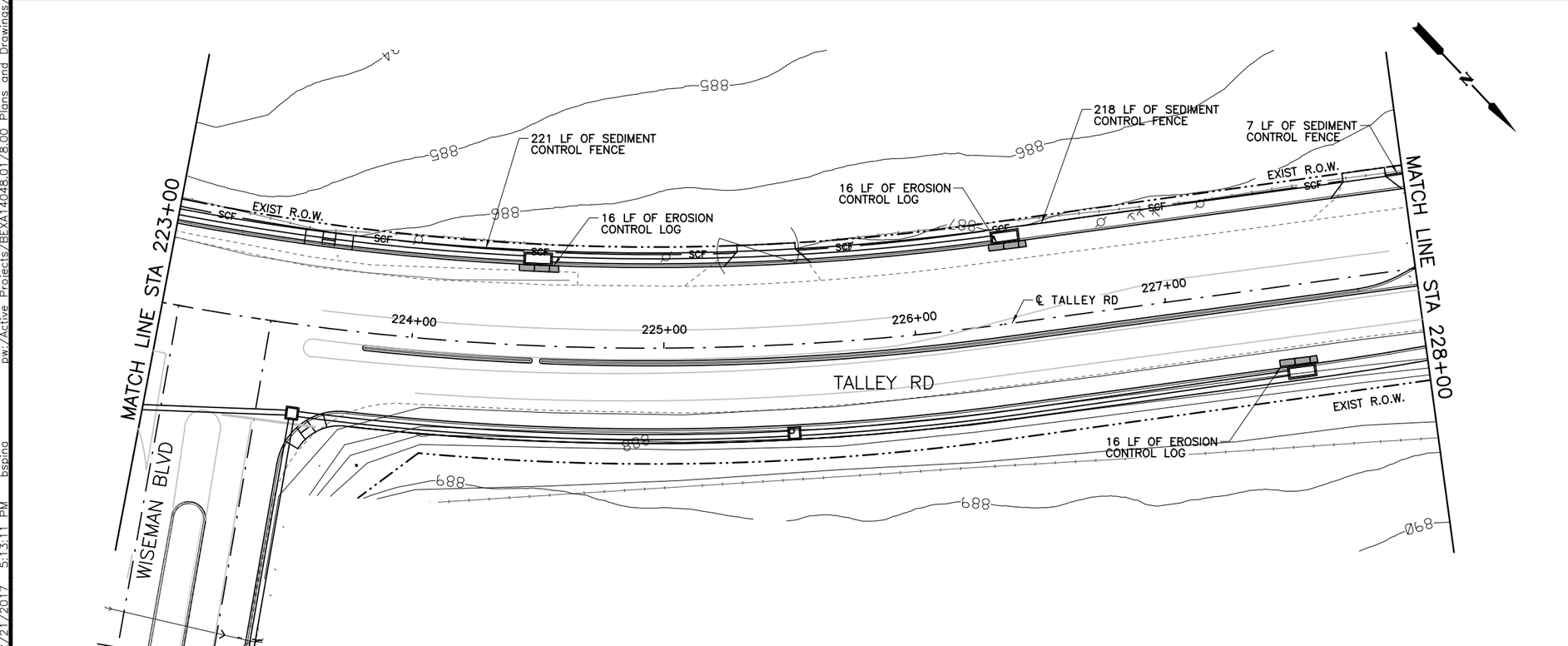

QUANTITY SUMMARY TALLEY RD.

	ITEM	UNIT	QUANT
0506 6002	ROCK FILTER DAM (INSTALL)(TY 2)	LF	0
0506 6011	ROCK FILTER DAM (REMOVE)	LF	0
0506 6038	SEDIMENT CONTROL FENCE (INSTALL)	LF	839
0506 6039	SEDIMENT CONTROL FENCE (REMOVE)	LF	839
0506 6041	EROSION CONTROL LOG (INSTALL)	LF	152
0506 6043	EROSION CONTROL LOG (REMOVE)	LF	152

LEGEND

- SCF — SEDIMENT CONTROL FENCE
- RFD2 — ROCK FILTER DAM TY 2
- EROSION CONTROL LOG
- DITCH FLOW ARROWS
- TRAFFIC FLOW ARROWS
- EXISTING RIGHT-OF-WAY
- PROPOSED RIGHT-OF-WAY

HORIZ.
25 12.5 0 25 50
SCALE FEET

THIS DOCUMENT IS FOR INTERIM REVIEW AND IS NOT INTENDED FOR CONSTRUCTION, BIDDING, PERMIT OR OTHER UNAUTHORIZED PURPOSES. THESE DOCUMENTS/PLANS WERE AUTHORIZED TO BE RELEASED.

BY: BRYAN J. SPINA ,P.E.
LICENSE NO.: 103776 DATE: 2/21/2017

BEXAR COUNTY
PUBLIC WORKS DEPARTMENT

NO	DATE	DESCRIPTION	DWG	CHK

REVISIONS

CP&Y
T.B.P.E. FIRM # 1741

LNV
engineers | architects | surveyors
8918 TESORO DR., SUITE 401
SAN ANTONIO, TX 78217
WWW.LNVINC.COM
TBPE FIRM NO. F-306
TBPLS FIRM NO. 10126502
PH. (210) 822-2232
FAX (210) 822-4032

TALLEY ROAD
SW3P LAYOUT
PHASE 3
SHEET 13 OF 14

PROJECT NUMBER:		SHEET NO.
0849-01-046		539
DESIGNED BY: –	ROADWAY/HIGHWAY:	
CHECKED BY: –	TALLEY ROAD	
DRAWN BY: –	STATE	COUNTY
CHECKED BY: –	TEXAS	BEXAR

cpybw_ANSIB.tbl
cpypdf_ANSIB.pltcfg
pw:/Active Projects/BEXA14048.01/8.00 Plans and Drawings/8.30 Cut Sheets/8.3.13 SW3P/14048SW3P13_PH3.dgn
2/21/2017 5:13:11 PM bsping

CP&Y
CHECKPRINT

REVIEWER
Initial:
Date:
VERIFIED
Initial:
Date:
PROCESSED
Initial:
Date:
VERIFIED
Initial:
Date:

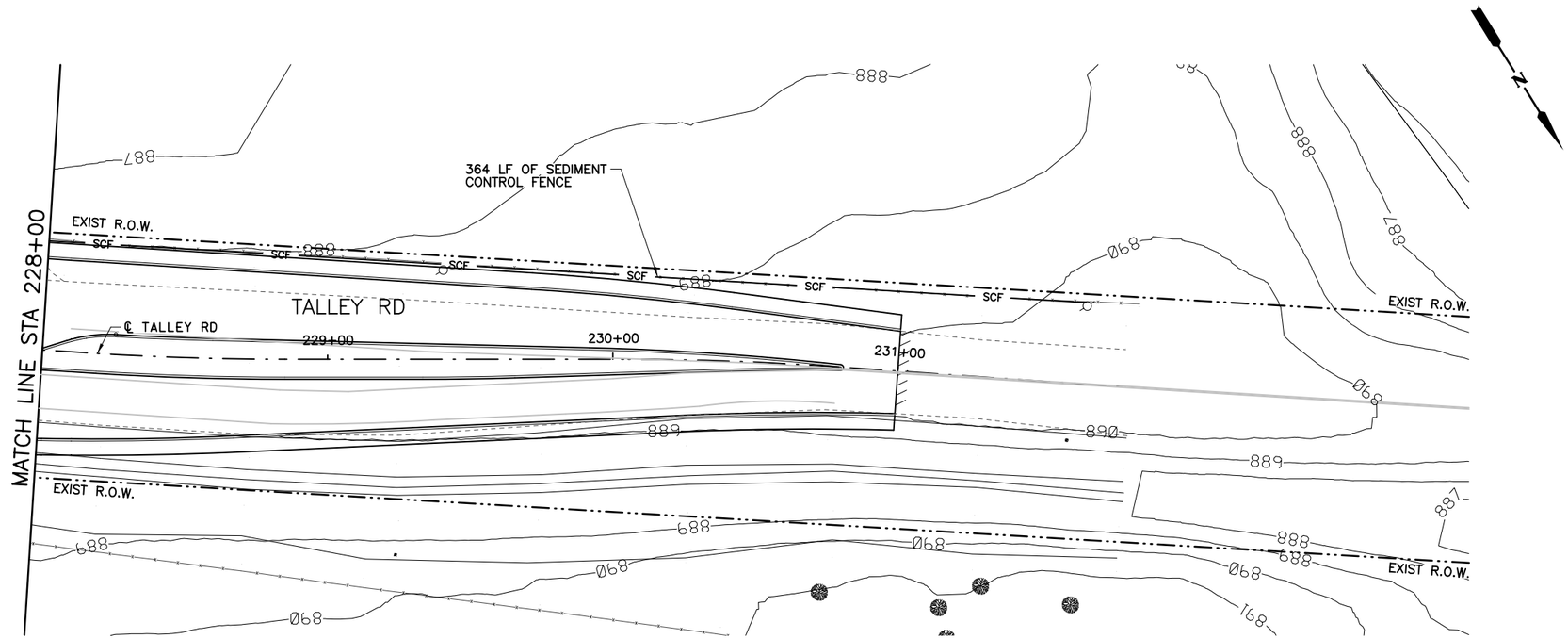

QUANTITY SUMMARY TALLEY RD.

TXDOT	ITEM	UNIT	QUANT
0506 6002	ROCK FILTER DAM (INSTALL)(TY 2)	LF	0
0506 6011	ROCK FILTER DAM (REMOVE)	LF	0
0506 6038	SEDIMENT CONTROL FENCE (INSTALL)	LF	364
0506 6039	SEDIMENT CONTROL FENCE (REMOVE)	LF	364
0506 6041	EROSION CONTROL LOG (INSTALL)	LF	0
0506 6043	EROSION CONTROL LOG (REMOVE)	LF	0

LEGEND

- SCF — SEDIMENT CONTROL FENCE
- RFD2 — ROCK FILTER DAM TY 2
- EROSION CONTROL LOG
- DITCH FLOW ARROWS
- TRAFFIC FLOW ARROWS
- EXISTING RIGHT-OF-WAY
- PROPOSED RIGHT-OF-WAY

HORIZ.
25 12.5 0 25 50
SCALE FEET

THIS DOCUMENT IS FOR INTERIM REVIEW AND IS NOT INTENDED FOR CONSTRUCTION, BIDDING, PERMIT OR OTHER UNAUTHORIZED PURPOSES. THESE DOCUMENTS/PLANS WERE AUTHORIZED TO BE RELEASED.

BY: BRYAN J. SPINA ,P.E.
LICENSE NO.: 103776 DATE: 2/21/2017

BEXAR COUNTY
PUBLIC WORKS DEPARTMENT

NO	DATE	DESCRIPTION	DWG	CHK

REVISIONS

CP&Y
T.B.P.E. FIRM # 1741

LNV
engineers | architects | surveyors
8918 TESORO DR., SUITE 401
SAN ANTONIO, TX 78217 WWW.LNVINC.COM
TBPE FIRM NO. F-366
TBPLS FIRM NO. 10126502
PH. (210) 822-2232
FAX (210) 822-4032

TALLEY ROAD

SW3P LAYOUT
PHASE 3
SHEET 14 OF 14

PROJECT NUMBER:		SHEET NO.
0849-01-046		540
DESIGNED BY: –	ROADWAY/HIGHWAY:	
CHECKED BY: –	TALLEY ROAD	
DRAWN BY: –	STATE	COUNTY
CHECKED BY: –	TEXAS	BEXAR

2/21/2017 5:13:17 PM bspina
cpybw_ANSIB.tbl
cpypdf_ANSIB.pltcfg
pw:/Active Projects/BEXA14048.01/8.00 Plans and Drawings/8.30 Cut Sheets/8.3.13 SW3P/14048SW3P14_PH3.dgn

DISCLAIMER:
The use of this standard is governed by the "Texas Engineering Practice Act". No warranty of any kind is made by TxDOT for any purpose whatsoever. TxDOT assumes no responsibility for the conversion of this standard to other formats or for incorrect results or damages resulting from its use.

I. STORMWATER POLLUTION PREVENTION-CLEAN WATER ACT SECTION 402

Texas Pollutant Discharge Elimination System (TPDES) TXR 150000: Stormwater Discharge Permit or Construction General Permit (CGP) required for projects with 1 or more acres distrubed soil. Projects with any disturbed soil must protect for erosion and sedimentation in accordance with Item 506.

☐ No Action Required ☒ Required Action

Action No.

1. Prevent stormwater pollution by controlling erosion and sedimentation in accordance with TPDES Permit TXR 150000.
2. Comply with the Storm Water Pollution Prevention Plan (SW3P) and revise when necessary to control pollution or required by the Engineer.
3. Post Construction Site Notice (CSN) with SW3P information on or near the site, accessible to the public and Texas Commission on Environmental Quality (TCEQ), Environmental Protection Agency (EPA) or other inspectors.
4. When Contractor project specific locations (PSL's) increase disturbed soil area to 5 acres or more, Contractor shall submit Notice of Intent (NOI) to TCEQ and the Engineer.
5. NOI required: ☒Yes ☐No

Note: If amount of soil disturbance changes, permit requirements may change.

II. WORK IN OR NEAR STREAMS, WATERBODIES AND WETLANDS CLEAN WATER ACT SECTIONS 401 AND 404

US Army Corps of Engineers (USACE) Permit required for filling, dredging, excavating or other work in any potential USACE jurisdictional water, such as, rivers, creeks, streams, or wetlands.

The Contractor shall adhere to all of the terms and conditions associated with the following permit(s):

☐ No Permit Required
☒ Nationwide Permit (NWP) 14 - Pre-construction Notice (PCN) not Required
☐ Nationwide Permit 14 - PCN Required
☐ Individual 404 Permit Required
☐ Other Nationwide Permit Required: NWP# _____

Required Actions: List waters of the US permit applies to, location in project and check Best Management Practices (BMPs) planned to control erosion, sedimentation and post-project total suspended solids (TSS).

1. MEDIO CREEK
2. UNNAMED TRIBUTARY TO MEDIO CREEK (TRIB A)
3. UNNAMED TRIBUTARY TO MEDIO CREEK (TRIB B)
4. UNNAMED TRIBUTARY TO MEDIO CREEK (TRIB C)

401 Best Management Practices: (Not applicable if no USACE permit)

Erosion	Sedimentation	Post-Construction TSS
☒ Temporary Vegetation	☒ Silt Fence	☐ Vegetative Filter Strips
☐ Blankets/Matting	☒ Rock Berm	☐ Retention/Irrigation Systems
☐ Mulch	☐ Triangular Filter Dike	☐ Extended Detention Basin
☒ Sodding	☒ Sand Bag Berm	☐ Constructed Wetlands
☐ Interceptor Swale	☐ Straw Bale Dike	☐ Wet Basin
☐ Diversion Dike	☐ Brush Berms	☐ Erosion Control Compost
☐ Erosion Control Compost	☐ Erosion Control Compost	☐ Mulch Filter Berm and Socks
☐ Mulch Filter Berm and Socks	☐ Mulch Filter Berm and Socks	☐ Compost Filter Berm and Socks
☐ Compost Filter Berm and Socks	☐ Compost Filter Berm and Socks	☒ Vegetation Lined Ditches
	☐ Stone Outlet Sediment Traps	☐ Sand Filter Systems
	☐ Sediment Basins	☐ Sedimentation Chambers
		☐ Grassy Swales

III. CULTURAL RESOURCES

Refer to TxDOT Standard Specifications in the event historical issues or archeological artifacts are found during construction. Upon discovery of archeological artifacts (bones, burnt rock, flint, pottery, etc.) cease work in the immediate area and contact the Engineer immediately.

☒ No Action Required ☐ Required Action

Action No.

1.

2.

3.

4.

IV. VEGETATION RESOURCES

Preserve native vegetation to the extent practical. Contractor must adhere to Construction Specification Requirements Specs 162,164, 192, 193, 506, 730, 751, 752 in order to comply with requirements for invasive species, beneficial landscaping, and tree/brush removal commitments.

☒ No Action Required ☐ Required Action

Action No.

1.

2.

3.

4.

V. FEDERAL LISTED, PROPOSED THREATENED, ENDANGERED SPECIES, CRITICAL HABITAT, STATE LISTED SPECIES, CANDIDATE SPECIES AND MIGRATORY BIRDS.

☐ No Action Required ☒ Required Action

Action No.

1. MIGRATORY BIRD NESTS: Schedule construction activities as needed to meet the following requirements:

   A. Do not remove or destroy any active migratory bird nests (nests containing eggs and/or flightless birds) at any time of year. If there are any active nests, they shall not be removed until the nests become inactive.

   B. On/in structures, if there are any active nests, they shall not be removed until all nests become inactive. After inactive nests are removed and/or before nest activity begins, deterrent materials may be applied to the structures to prevent future nest building.

2. See Item 5 in General Notes.
3. If during construction a void/karst feature is encountered, construction would immediately cease and the County would be notified. The void would be evacuated in accordance with USFWS survey protocol and, if warranted, coordination with the USFWS would be initiated. No construction would be allowed in the vicinity of the void until approved by the County.
4.

If any of the listed species are observed, cease work in the immediate area, do not disturb species or habitat and contact the Engineer immediately. The work may not remove active nests from bridges and other structures during nesting season of the birds associated with the nests. If caves or sinkholes are discovered, cease work in the immediated area, and contact the Engineer immediately.

VI. HAZARDOUS MATERIALS OR CONTAMINATION ISSUES

General (applies to all projects):

Comply with the Hazard Communication Act (the Act) for personnel who will be working with hazardous materials by conducting safety meetings prior to beginning construction and making workers aware of potential hazards in the workplace. Ensure that all workers are provided with personal protective equipment appropiate for any hazardous materials used.

Obtain and keep on-site Material Safety Data Sheets (MSDS) for all hazardous products used on the project, which may include, but are not limited to the following categories: Paints, acids, solvents, asphalt products, chemical additives, fuels and concrete curing compounds or additives. Provide protected storage, off bare ground and covered, for products which may be hazardous. Maintain product labelling as required by the Act.

Maintain an adequate supply of on-site spill response materials, as indicated in the MSDS. In the event of a spill, take actions to mitigate the spill as indicated in the MSDS, in accordance with safe work practices, and contact the District Spill Coordinator immediately. The Contractor shall be responsible for the proper containment and cleanup of all product spills.

Contact the Engineer if any of the follwing are detected:

* Dead or distressed vegetation (not identified as normal)
* Trash piles, drums, canister, barrels, etc.
* Undesirable smells or odors
* Evidence of leaching or seepage of substances

Hazardous Materials or Contamination Issues Specific to this Project:

☒ No Action Required ☐ Required Action

Action No.

1.

2.

3.

Does the project involve the demolition of a span bridge?

☒ Yes ☐ No (No further action required)

If "Yes", a pre- demolition notification must be submitted to the Texas Department of State Health Services. The contractor shall contact TxDOT's Project Engineer 25 calendar days prior to the demolition of the bridges(s) on the project to assist with the notification.

VII. OTHER ENVIRONMENTAL ISSUES

(includes regional issues such as Edwards Aquifer District, etc.)

☒ No Action Required ☐ Required Action

Action No.

1.

2.

3.

Texas Department of Transportation
San Antonio District Standard

ENVIRONMENTAL PERMITS, ISSUES AND COMMITMENTS

EPIC

FILE: epic_2015-10-09_SAT.dgn	DN: TxDOT	CK: TxDOT	DW: BW	CK: GAG
©TxDOT OCTOBER 2015	CONT	SECT	JOB	HIGHWAY
REVISIONS				
	DIST	COUNTY		SHEET NO.
				541

CP&Y CHECKPRINT

REVIEWER
Initial:
Date:
VERIFIED
Initial:
Date:
PROCESSED
Initial:
Date:
VERIFIED
Initial:
Date:

A. GENERAL SITE DATA

1. PROJECT LIMITS: *TALLY ROAD: WISEMAN BLVD TO POTRANCO RD (FM 1957)*

2. PROJECT SITE MAPS:
   - *Project Latitude* 29° 26' 46.15" N *Project Longitude* 98° 45' 08.44" W
   - *Project Location Map: Shown on Title Sheet*
   - *Drainage Patterns: Shown on Drainage Area Maps (Sheets X-Y)*
   - *Approx. Slopes Anticipated After Major Gradings and Areas of Soil Disturbance: Shown on Typical Sections (Sheets X-Y)*
   - *Major Controls and Locations of Stabilization Practices: Shown on SW3P Sheets (Sheets X-Y)*
   - *Project Specific Locations: Off-site waste, borrow, or storage areas are not part of this SW3P.*
   - *Surface Waters and Discharge Locations: Shown on Drainage and Culvert Layout Sheets (Sheets X-Y)*

3. PROJECT DESCRIPTION: *FOR WORK CONSISTING OF GRADE, BASE, SURF, PAVEMENT MARKINGS OF EXPAND 2 TO 4 LANES*

   - *Joint-bid utilities are covered by this SW3P (Sheets X-Y)*
   Non-Joint Bid Utilities are not part of this SW3P.

4. FOR MAJOR SOIL DISTURBING ACTIVITIES SEQUENCE OF EVENTS:

   1. *Install controls down-slope of work area and initiate inspection and maintenance activities.*
   2. *Begin phased construction with interim stabilization practices. Adjust erosion and sedimentation controls during construction to meet requirements and changing conditions and as directed/approved by the Engineer.*
   3. *Major soil disturbing activities may include but are not limited to: right-of-way preparation, cut and/or fill to improve roadway profile, final grading and placement of topsoil and the following (if marked):*

   _X_ *Placement of road base*
   _X_ *Exstensive ditch grading*
   _X_ *Upgrading or replacing culverts or bridges*
   _X_ *Temporary detour road(s)*
   ____ *Other:* _____

5. EXISTING AND PROPOSED CONDITIONS:

   Description of existing vegetative cover: NATIVE GRASS
   Percentage of existing vegetative cover: (Provide percentage)
   Existing vegetative cover: (mark one) ____ *Thick or uniformly established*
   ____ *Thin and Patchy*
   ____ *None or minimal cover*
   Description of soils: (Provide classification and description of soils)
   Site Acreage: 30.0 A.C. *Acreage disturbed:* 30.0 A.C.
   Site runoff coefficient (pre-construction): 0.55 *Site runoff coefficient (post-construction):* 0.75

6. RECEIVING WATERS: *(Mark all that apply)*

   ____ *A classified stream does not pass through project.*
   ____ *A classified stream passes through project. Name* MEDIO CREEK *Segment Number* ____
   Name of receiving waters that will receive discharges from disturbed areas of the project: MEDIO CREEK

   Site is in a Municipal Separate Storm Sewer System (MS4).
   MS4 Operator (name): CITY OF SAN ANTONIO

B. BEST MANAGEMENT PRACTICES

General timing or sequence for implementation of BMPs shall be as required and/or as directed/approved by the Engineer to provide adequate controls. BMPs shown on plan sheets are to be considered "proposed" unless/until install date is shown. BMPs are to reduce sediments from road construction activities.

1. SOIL STABILIZATION PRACTICES: (Select T = Temporary or P = Permanent, as applicable)

_T_	SEEDING	____	PRESERVATION OF NATURAL RESOURCES
____	MULCHING (Hay or Straw)	____	FLEXIBLE CHANNEL LINER
____	BUFFER ZONES	____	RIGID CHANNEL LINER
____	PLANTING	____	SOIL RETENTION BLANKET
____	COMPOST/MULCH FILTER BERM	____	COMPOST MANUFACTURED TOPSOIL
_P_	SODDING	____	OTHER: (Specify Practice)

2. STRUCTURAL PRACTICES: (Select T = Temporary or P = Permanent, as applicable)

_T_	SILT FENCES
____	HAY BALES
_T_	ROCK FILTER DAMS
____	DIVERSION, INTERCEPTOR, OR PERIMETER DIKES
____	DIVERSION, INTERCEPTOR, OR PERIMETER SWALES
____	DIVERSION DIKE AND SWALE COMBINATIONS
____	PIPE SLOPE DRAINS
____	PAVED FLUMES
_T_	ROCK BEDDING AT CONSTRUCTION EXIT
____	TIMBER MATTING AT CONSTRUCTION EXIT
____	CHANNEL LINERS
____	SEDIMENT TRAPS
____	SEDIMENT BASINS
____	STORM INLET SEDIMENT TRAP
____	STONE OUTLET STRUCTURES
_P_	CURBS AND GUTTERS
_P_	STORM SEWERS
____	VELOCITY CONTROL DEVICES
____	OTHER: *(Specify Practice)*

3. STORM WATER MANAGEMENT:

   The proposed facility was designed in consideration of hydraulic design standards to convey stormwater in a manner that is protective of public safety and property. The control of erosion from the facility is inherent to the design. Additional factors affecting post-construction stormwater at the project location include: (mark all that apply)

   ____ *Existing or new vegetation provides natural filtration.*
   ____ *The design includes provisions for permanent erosion controls provided by strategically placed pervious and impervious surfaces.*
   ____ *Project includes permanent sedimentation controls (other than grass).*
   _X_ *Velocities do not require dissipation devices.*
   ____ *Velocity-dissipation devices included in the design.*
   ____ *Other :* ALLOWABLE NON-STORM WATER DISCHARGES DEFINED IN THE TPDES CONSTRUCTION GENERAL PERMIT PART II, SECTION #3

4. NON-STORM WATER DISCHARGES:

   Off-site discharges are prohibited except as follows:

   1. *Discharges from fire fighting activities and/or fire hydrant flushings.*
   2. *Vehicle, external building, and pavement wash water where detergents and soaps are not used and where spills or leaks of toxic or hazardous materials have not occurred (unless all spilled material has been removed).*
   3. *Plain water used to control dust.*
   4. *Plain water originating from potable water sources.*
   5. *Uncontaminated groundwater, spring water or accumulated stormwater.*
   6. *Foundation or footing drains where flows are not contaminated with process materials such as solvents.*
   7. *Other:* _____

   Concrete truck wash water discharges on the site should be prohibited or minimized. If allowed by the Engineer, they must be managed in a manner so as not to contaminate surface water. They must not be located in areas of concentrated flow. Concrete truck wash-out locations must be shown on the SW3P Layout and included in the inspections.

   Hazardous material spill/leak shall be prevented or minimized. At a minimum, this includes asphalt products, fuels, oils, lubricants, solvents, paints, acids, concrete curing compounds and chemical additives for soil stabilization. BMPs shall be implemented to the storage areas of these products. All spills must be cleaned and disposed properly and reported to the Engineer. Report any release at or above the reportable quantity during a 24 hour period to the National Response Center at 1-800-424-8802.

C. OTHER REQUIREMENTS & PRACTICES

1. MAINTENANCE:

   All erosion and sediment controls shall be maintained in good working order. If a repair is necessary, it shall be performed before the next anticipated storm event but no later than 7 calendar days after the surrounding exposed ground has dried sufficiently to prevent further damage from equipment. If maintenance prior to the next anticipated storm event is impracticable, maintenance must be scheduled and accomplished as soon as practicable. Disturbed areas on which construction activities have ceased, temporarily or permanently, shall be stabilized within 14 calendar days unless they are scheduled to and do resume within 21 calendar days. The areas adjacent to creeks and drainageways shall have priority followed by protecting storm sewer inlets.

2. INSPECTION:

   For areas of the construction site that have not been finally stabilized, areas used for storage of materials, structural control measures, and locations where vehicles enter or exit the site, personnel provided by the permittee and familiar with the SW3P must inspect disturbed areas at least once every seven (7) calendar days. An Inspection and Maintenance Report shall be prepared for each inspection and the controls shall be revised on the SW3P within seven (7) calendar days following the inspection.

3. WASTE MATERIALS:

   All non-hazardous municipal waste materials such as litter, rubbish, trash and garbage located on or originating from the project shall be collected and stored in a securely lidded metal dumpster, provided by the Contractor. The dumpster shall be emptied as necessary or as required by local regulation and the trash shall be hauled to a permitted disposal facility. The burying of non-hazardous municipal waste on the project shall not be permitted. Construction material waste sites, stockpiles and haul roads shall be constructed to minimize and control the amount of sediment that may enter receiving waters. Construction material waste sites shall not be located in any wetland, water body or stream bed. Construction staging areas and vehicle maintenance areas shall be constructed in a manner to minimize the runoff of pollutants.

4. OFFSITE VEHICLE TRACKING:

   Off-site vehicle tracking of sediments and the generation of dust must be minimized. Excess sediments on road shall be removed on a regular basis as directed/approved by the Engineer.

5. OTHER:

   See the EPIC sheet for additional environmental information.

THIS DOCUMENT IS FOR INTERIM REVIEW AND IS NOT INTENDED FOR CONSTRUCTION, BIDDING, PERMIT OR OTHER UNAUTHORIZED PURPOSES. THESE DOCUMENTS/PLANS WERE AUTHORIZED TO BE RELEASED.

BY: BRYAN J. SPINA ,P.E.
LICENSE NO.: 103776 DATE: 2/21/2017

BEXAR COUNTY
PUBLIC WORKS DEPARTMENT

NO	DATE	DESCRIPTION	DWG	CHK

REVISIONS

CP&Y T.B.P.E. FIRM # 1741

LNV engineers | architects | surveyors
8918 TESORO DR., SUITE 401, SAN ANTONIO, TX 78217
TBPE FIRM NO. F-366, TBPLS FIRM NO. 10126502
PH. (210) 822-2232, FAX (210) 822-4932
WWW.LNVINC.COM

TALLEY ROAD

STORM WATER POLLUTION PREVENTION PLAN (SW3P)

PROJECT NUMBER:		SHEET NO.
0849-01-046		542
DESIGNED BY: –	ROADWAY/HIGHWAY:	
CHECKED BY: –	TALLEY ROAD	
DRAWN BY: –	STATE	COUNTY
CHECKED BY: –	TEXAS	BEXAR

DISCLAIMER:
The use of this standard is governed by the "Texas Engineering Practice Act". No warranty of any kind is made by TxDOT for any purpose whatsoever. TxDOT assumes no responsibility for the conversion of this standard to other formats or for incorrect results or damages resulting from its use.

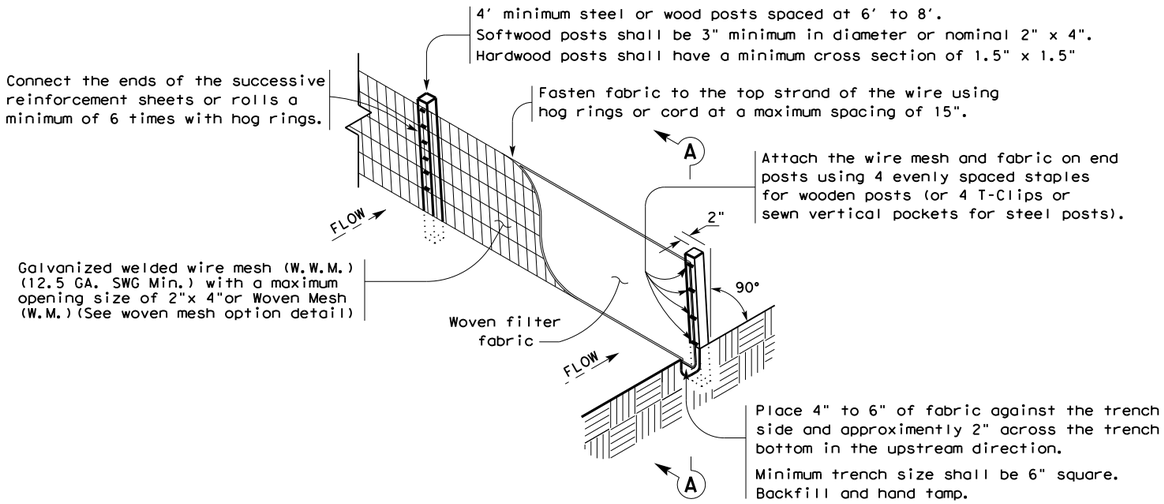

TEMPORARY SEDIMENT CONTROL FENCE

SCF

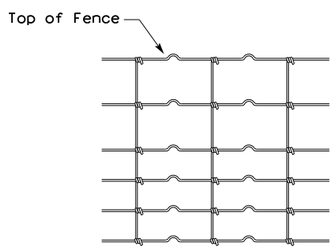

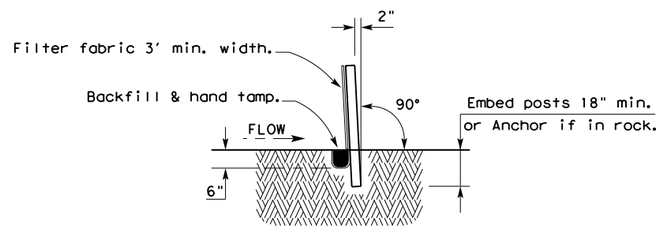

SECTION A-A

HINGE JOINT KNOT WOVEN MESH (OPTION) DETAIL

Galvanized hinge joint knot woven mesh (12.5 GA.SWG Min.) requires a minimum of five horizontal wires spaced at a maximum of 12 inches apart and all vertical wires spaced at a maximum of 12 inches apart.

SEDIMENT CONTROL FENCE USAGE GUIDELINES

A sediment control fence may be constructed near the downstream perimeter of a disturbed area along a contour to intercept sediment from overland runoff. A 2 year storm frequency may be used to calculate the flow rate to be filtered.

Sediment control fence should be sized to filter a maximum flow through rate of 100 GPM/FT^2. Sediment control fence is not recommended to control erosion from a drainage area larger than 2 acres.

LEGEND

Sediment Control Fence

SCF

GENERAL NOTES

1. Vertical tracking is required on projects where soil distributing activities have occurred unless otherwise approved.
2. Perform vertical tracking on slopes to temporarily stabilize soil.
3. Provide equipment with a track undercarriage capable of producing linear soil impressions measuring a minimum of 12" in length by 2" to 4" in width by 1/2" to 2" in depth.
4. Do not exceed 12" between track impressions.
5. Install continous linear track impressions where the minimum 12" length impressions are perpendicular to the slope or direction of water flow.

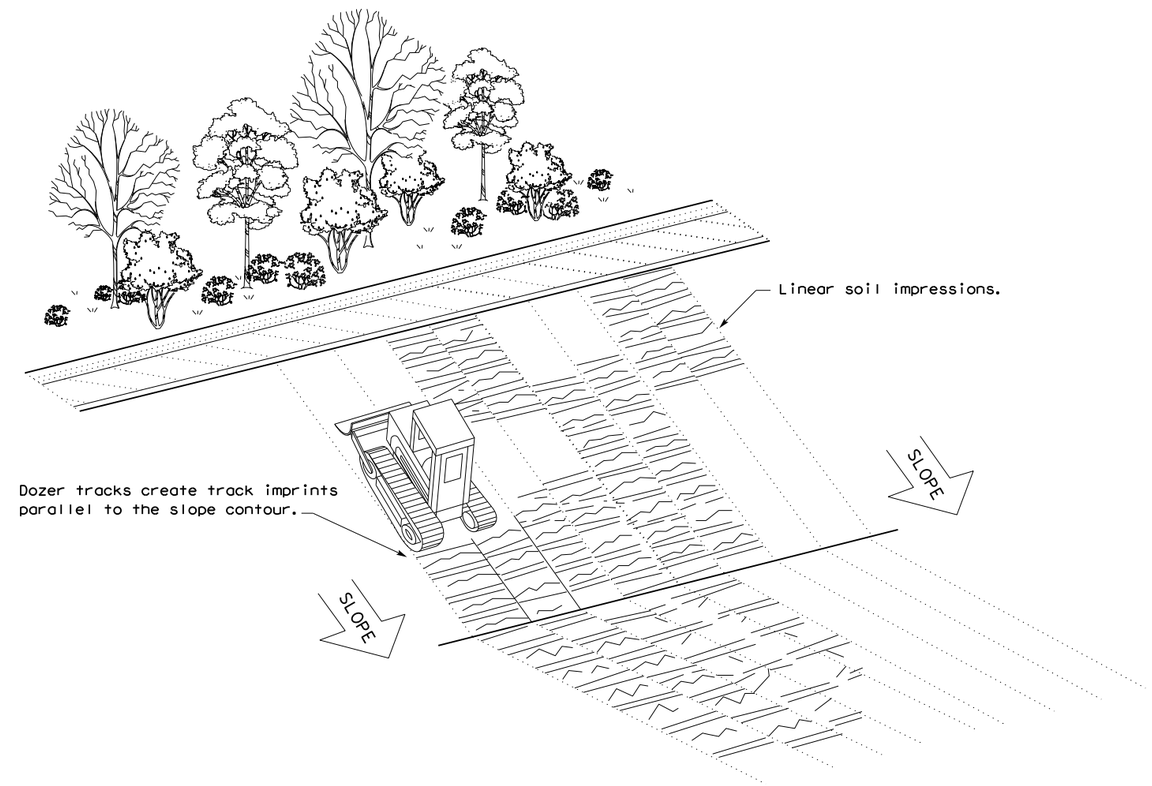

VERTICAL TRACKING

Texas Department of Transportation

Design Division Standard

TEMPORARY EROSION, SEDIMENT AND WATER POLLUTION CONTROL MEASURES

FENCE & VERTICAL TRACKING

EC(1)-16

FILE: ec116	DN: TxDOT	CK: KM	DW: VP	DN/CK: LS
© TxDOT: JULY 2016	CONT	SECT	JOB	HIGHWAY
REVISIONS				
	DIST	COUNTY		SHEET NO.
				543

DISCLAIMER:
The use of this standard is governed by the "Texas Engineering Practice Act". No warranty of any kind is made by TxDOT for any purpose whatsoever. TxDOT assumes no responsibility for the conversion of this standard to other formats or for incorrect results or damages resulting from its use.

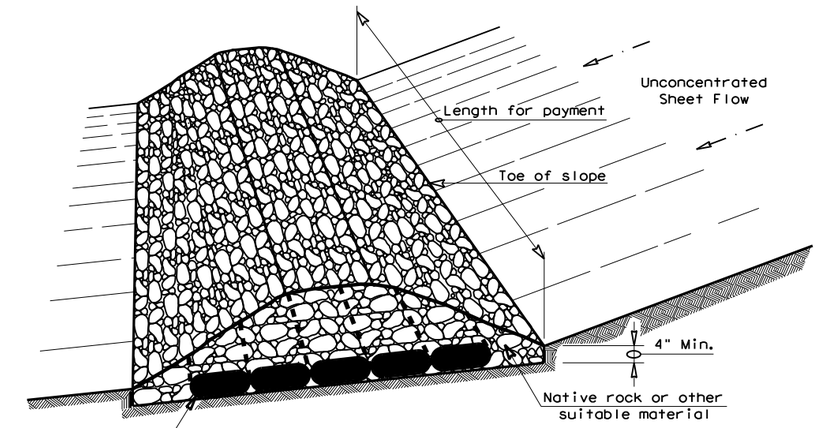

FILTER DAM AT TOE OF SLOPE

RFD1

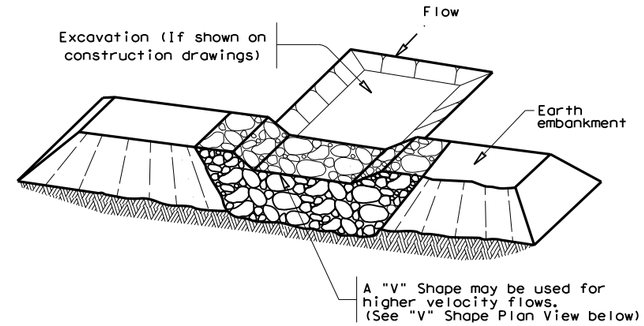

FILTER DAM AT SEDIMENT TRAP

RFD1 — OR — RFD2

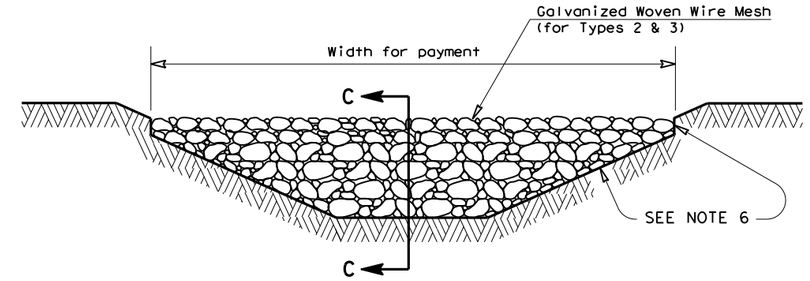

FILTER DAM AT CHANNEL SECTIONS

RFD1 — OR — RFD2 — OR — RFD3

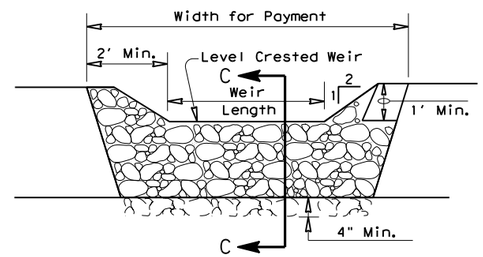

PROFILE

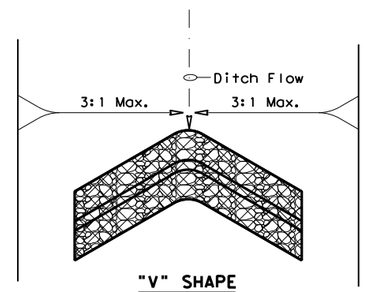

"V" SHAPE
PLAN VIEW

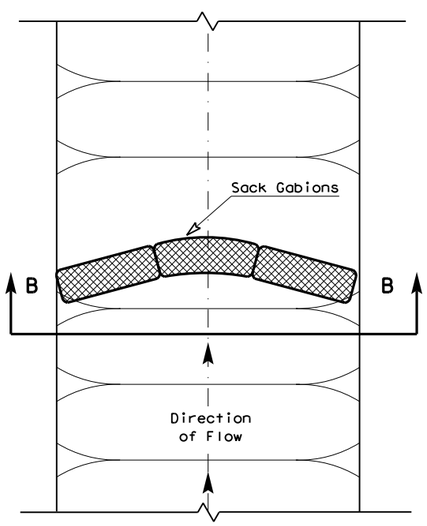

PLAN VIEW

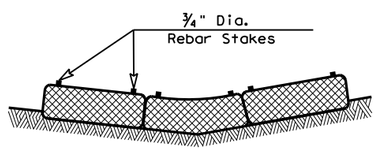

SECTION B-B

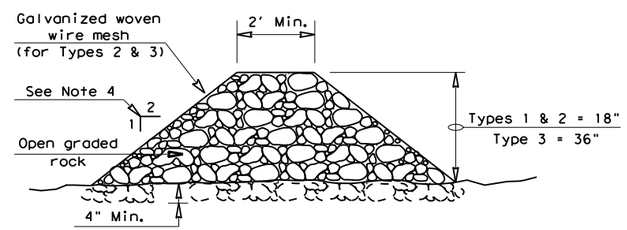

SECTION C-C

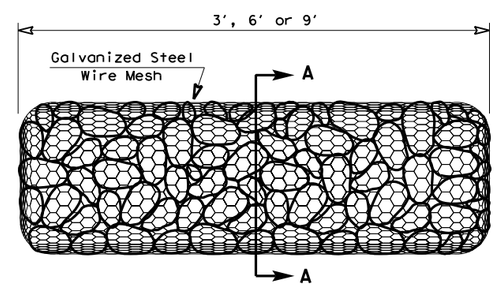

TYPE 4 (SACK GABIONS)

RFD4

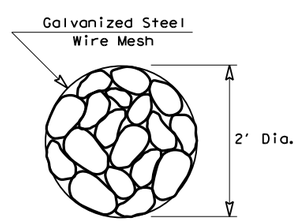

SECTION A-A

ROCK FILTER DAM USAGE GUIDELINES

Rock Filter Dams should be constructed downstream from disturbed areas to intercept sediment from overland runoff and/or concentrated flow. The dams should be sized to filter a maximum flow through rate of 60 GPM/FT^2 of cross sectional area. A 2 year storm frequency may be used to calculate the flow rate.

Type 1 (18" high with no wire mesh) (3" to 6" aggregate): Type 1 may be used at the toe of slopes, around inlets, in small ditches, and at dike or swale outlets. This type of dam is recommended to control erosion from a drainage area of 5 acres or less. Type 1 may not be used in concentrated high velocity flows (approximently 8 Ft/Sec or more) in which aggregate wash out may occur. Sandbags may be used at the embedded foundation (4" deep min.) for better filtering efficiency of low flows if called for on the plans or directed by the Engineer.

Type 2 (18" high with wire mesh) (3" to 6" aggregate): Type 2 may be used in ditches and at dike or swale outlets.

Type 3 (36" high with wire mesh) (4" to 8" aggregate): Type 3 may be used in stream flow and should be secured to the stream bed.

Type 4 (Sack gabions) (3" to 6" aggregate): Type 4 May be used in ditches and smaller channels to form an erosion control dam.

Type 5: Provide rock filter dams as shown on plans.

GENERAL NOTES

1. If shown on the plans or directed by the Engineer, filter dams should be placed near the toe of slopes where erosion is anticipated, upstream and/or downstream at drainage structures, and in roadway ditches and channels to collect sediment.
2. Materials (aggregate, wire mesh, sandbags, etc.) shall be as indicated by the specification for "Rock Filter Dams for Erosion and Sedimentation Control".
3. The rock filter dam dimensions shall be as indicated on the SW3P plans.
4. Side slopes should be 2:1 or flatter. Dams within the safety zone shall have sideslopes of 6:1 or flatter.
5. Maintain a minimum of 1' between top of rock filter dam weir and top of embankment for filter dams at sediment traps.
6. Filter dams should be embedded a minimum of 4" into existing ground.
7. The sediment trap for ponding of sediment laden runoff shall be of the dimensions shown on the plans.
8. Rock filter dam types 2 & 3 shall be secured with 20 gauge galvanized woven wire mesh with 1" diameter hexagonal openings. The aggregate shall be placed on the mesh to the height & slopes specified. The mesh shall be folded at the upstream side over the aggregate and tightly secured to itself on the downstream side using wire ties or hog rings. For in stream use, the mesh should be secured or staked to the stream bed prior to aggregate placement.
9. Sack Gabions should be staked down with ¾" dia. rebar stakes, and have a double-twisted hexagonal weave with a nominal mesh opening of 2 ½" x 3 ¼"
10. Flow outlet should be onto a stabilized area (vegetation, rock, etc.).
11. The guidelines shown hereon are suggestions only and may be modified by the Engineer.

PLAN SHEET LEGEND

Type 1 Rock Filter Dam	RFD1
Type 2 Rock Filter Dam	RFD2
Type 3 Rock Filter Dam	RFD3
Type 4 Rock Filter Dam	RFD4

Texas Department of Transportation — Design Division Standard

TEMPORARY EROSION, SEDIMENT AND WATER POLLUTION CONTROL MEASURES

ROCK FILTER DAMS

EC(2)-16

FILE: ec216	DN: TxDOT	CK: KM	DW: VP	DN/CK: LS
© TxDOT: JULY 2016	CONT	SECT	JOB	HIGHWAY
REVISIONS				
	DIST	COUNTY		SHEET NO.
				544

DATE:
FILE:

DISCLAIMER:
The use of this standard is governed by the "Texas Engineering Practice Act". No warranty of any kind is made by TxDOT for any purpose whatsoever. TxDOT assumes no responsibility for the conversion of this standard to other formats or for incorrect results or damages resulting from its use.

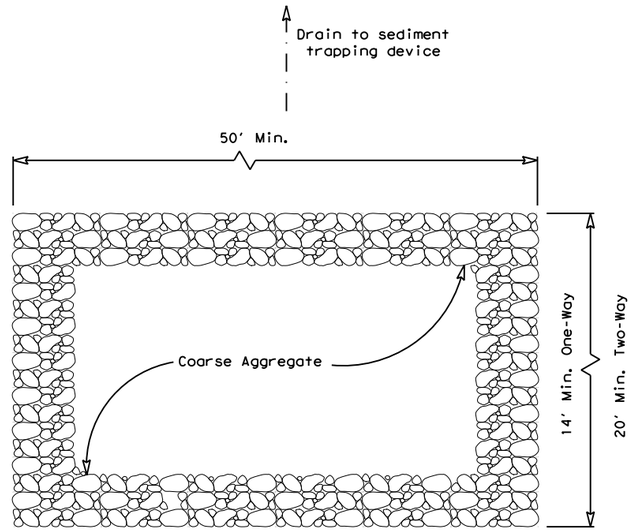

PLAN VIEW

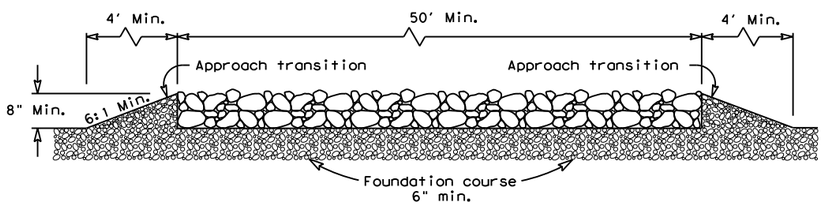

ELEVATION VIEW

CONSTRUCTION EXIT (TYPE 1)

ROCK CONSTRUCTION (LONG TERM)

GENERAL NOTES (TYPE 1)

1. The length of the type 1 construction exit shall be as indicated on the plans, but not less than 50'.
2. The coarse aggregate should be open graded with a size of 4" to 8".
3. The approach transitions should be no steeper than 6:1 and constructed as directed by the Engineer.
4. The construction exit foundation course shall be flexible base, bituminous concrete, portland cement concrete or other materialas approved by the Engineer.
5. The construction exit shall be graded to allow drainage to a sediment trapping device.
6. The guidelines shown hereon are suggestions only and may be modified by the Engineer.
7. Construct exits with a width of at least 14 ft. for one-way and 20 ft. for two-way traffic for the full width of the exit, or as directed by the engineer.

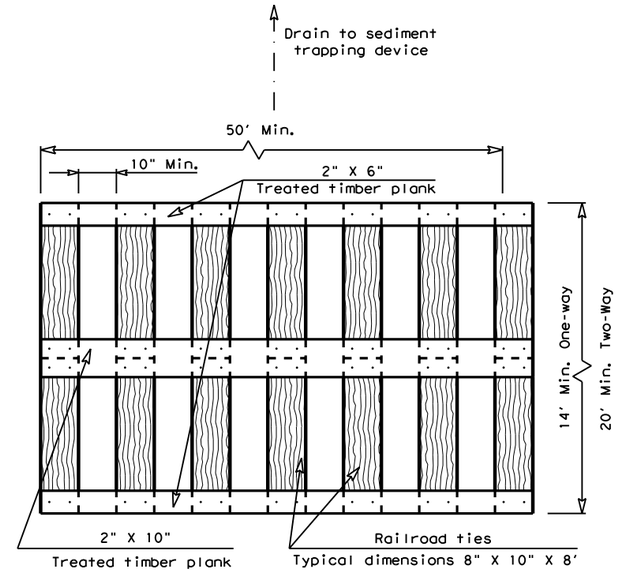

PLAN VIEW

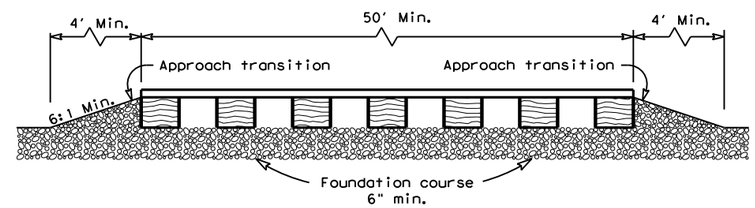

ELEVATION VIEW

CONSTRUCTION EXIT (TYPE 2)

TIMBER CONSTRUCTION (LONG TERM)

GENERAL NOTES (TYPE 2)

1. The length of the type 2 construction exit shall be as indicated on the plans, but not less than 50'.
2. The treated timber planks shall be attached to the railroad ties with ½"x 6" min. lag bolts. Other fasteners may be used as approved by the Engineer.
3. The treated timber planks shall be #2 grade min., and should be free from large and loose knots.
4. The approach transitions shall be no steeper than 6:1 and constructed as directed by the Engineer.
5. The construction exit foundation course shall be flexible base, bituminous concrete, portland cement concrete or other material as approved by the Engineer.
6. The construction exit should be graded to allow drainage to a sediment trapping device.
7. The guidelines shown hereon are suggestions only and may be modified by the Engineer.
8. Construct exits with a width of at least 14 ft. for one-way and 20 ft. for two-way traffic for the full width of the exit, or as directed by the engineer.

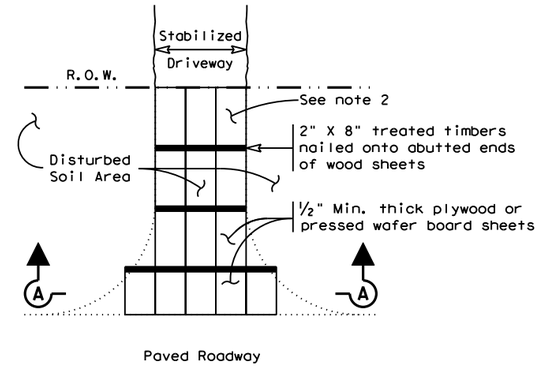

PLAN VIEW

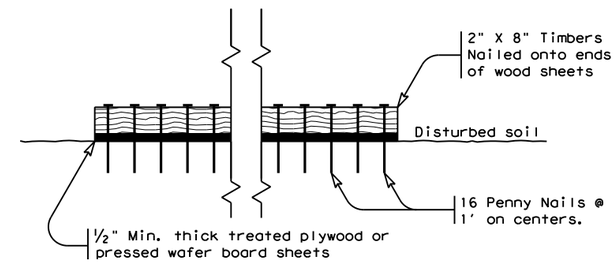

SECTION A-A

CONSTRUCTION EXIT (TYPE 3)

SHORT TERM

GENERAL NOTES (TYPE 3)

1. The length of the type 3 construction exit shall be as shown on the plans, or as directed by the Engineer.
2. The type 3 construction exit may be constructed from open graded crushed stone with a size of two to four inches spread a min. of 4" thick to the limits shown on the plans.
3. The treated timber planks shall be #2 grade min., and should be free from large and loose knots.
4. The guidelines shown hereon are suggestions only and may be modified by the Engineer.

Texas Department of Transportation

Design Division Standard

TEMPORARY EROSION, SEDIMENT AND WATER POLLUTION CONTROL MEASURES

CONSTRUCTION EXITS

EC(3)-16

FILE: ec316	DN: TxDOT	CK: KM	DW: VP	DN/CK: LS
©TxDOT: JULY 2016	CONT	SECT	JOB	HIGHWAY
REVISIONS				
	DIST	COUNTY		SHEET NO.
				545

DATE:
FILE:

DISCLAIMER:
The use of this standard is governed by the "Texas Engineering Practice Act". No warranty of any kind is made by TxDOT for any purpose whatsoever. TxDOT assumes no responsibility for the conversion of this standard to other formats or for incorrect results or damages resulting from its use.

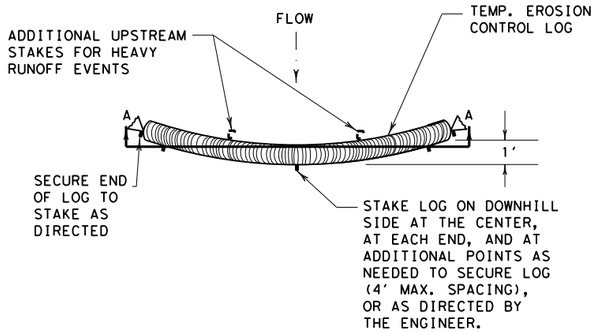

PLAN VIEW

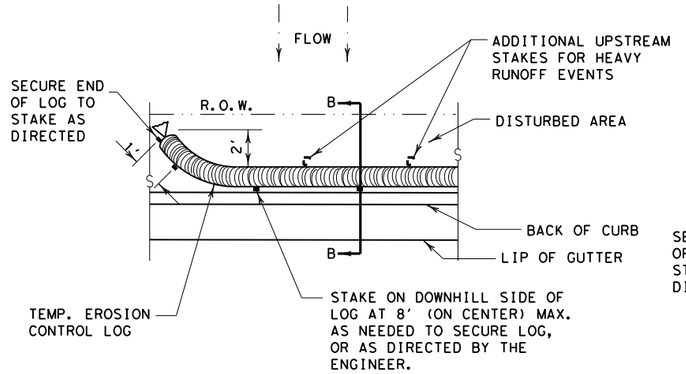

PLAN VIEW

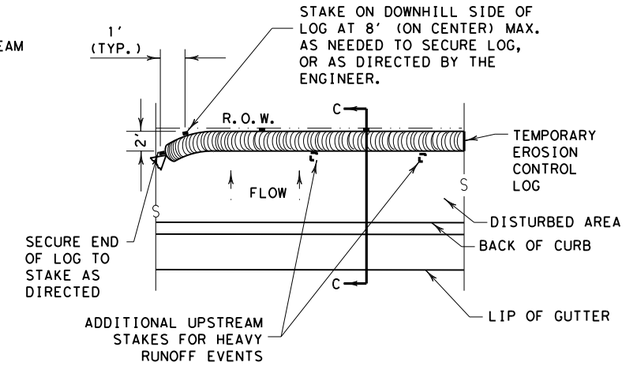

PLAN VIEW

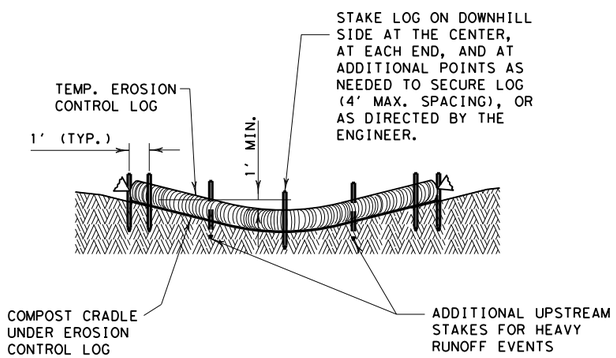

SECTION A-A

EROSION CONTROL LOG DAM

CL-D

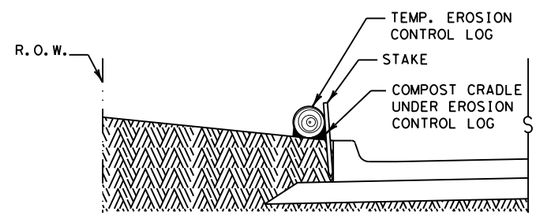

SECTION B-B

EROSION CONTROL LOG AT BACK OF CURB

CL-BOC

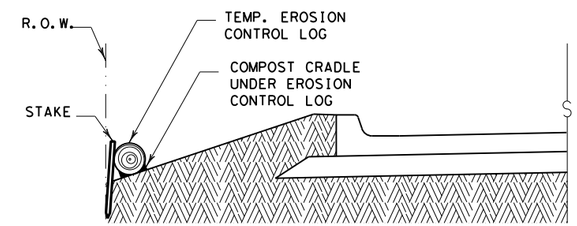

SECTION C-C

EROSION CONTROL LOG AT EDGE OF RIGHT-OF-WAY

CL-ROW

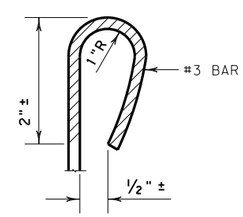

REBAR STAKE DETAIL

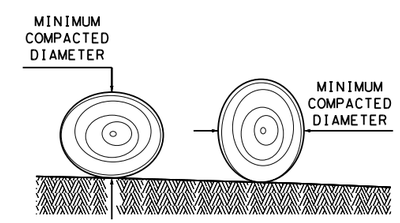

DIAMETER MEASUREMENTS OF EROSION CONTROL LOGS SPECIFIED IN PLANS

GENERAL NOTES:

1. EROSION CONTROL LOGS SHALL BE INSTALLED IN ACCORDANCE WITH MANFACTURER'S RECOMMENDATIONS, OR AS DIRECTED BY THE ENGINEER.
2. LENGTHS OF EROSION CONTROL LOGS SHALL BE IN ACCORDANCE WITH MANUFACTURER'S RECOMMENDATIONS AND AS REQUIRED FOR THE PURPOSE INTENDED.
3. UNLESS OTHERWISE DIRECTED, USE BIODEGRADABLE OR PHOTODEGRADABLE CONTAINMENT MESH ONLY WHERE LOG WILL REMAIN IN PLACE AS PART OF A VEGETATIVE SYSTEM. FOR TEMPORARY INSTALLATIONS, USE RECYCLABLE CONTAINMENT MESH.
4. FILL LOGS WITH SUFFICIENT FILTER MATERIAL TO ACHIEVE THE MINIMUM COMPACTED DIAMETER SPECIFIED IN THE PLANS WITHOUT EXCESSIVE DEFORMATION.
5. STAKES SHALL BE 2" X 2" WOOD OR #3 REBAR, 2'-4' LONG, EMBEDDED SUCH THAT 2" PROTRUDES ABOVE LOG, OR AS DIRECTED BY THE ENGINEER.
6. DO NOT PLACE STAKES THROUGH CONTAINMENT MESH.
7. COMPOST CRADLE MATERIAL IS INCIDENTAL & WILL NOT BE PAID FOR SEPARATELY.
8. SANDBAGS USED AS ANCHORS SHALL BE PLACED ON TOP OF LOGS & SHALL BE OF SUFFICIENT SIZE TO HOLD LOGS IN PLACE.
9. TURN THE ENDS OF EACH ROW OF LOGS UPSLOPE TO PREVENT RUNOFF FROM FLOWING AROUND THE LOG.
10. FOR HEAVY RUNOFF EVENTS, ADDITIONAL UPSTREAM STAKES MAY BE NECESSARY TO KEEP LOG FROM FOLDING IN ON ITSELF.

CL-D	EROSION CONTROL LOG DAM
CL-BOC	EROSION CONTROL LOG AT BACK OF CURB
CL-ROW	EROSION CONTROL LOG AT EDGE OF RIGHT-OF-WAY
CL-SST	EROSION CONTROL LOGS ON SLOPES STAKE AND TRENCHING ANCHORING
CL-SSL	EROSION CONTROL LOGS ON SLOPES STAKE AND LASHING ANCHORING
CL-DI	EROSION CONTROL LOG AT DROP INLET
CL-CI	EROSION CONTROL LOG AT CURB INLET
CL-GI	EROSION CONTROL LOG AT CURB & GRATE INLET

SEDIMENT BASIN & TRAP USAGE GUIDELINES

An erosion control log sediment trap may be used to filter sediment out of runoff draining from an unstabilized area.

Log Traps: The drainage area for a sediment trap should not exceed 5 acres. The trap capacity should be 1800 CF/Acre (0.5" over the drainage area).

Control logs should be placed in the following locations:

1. Within drainage ditches spaced as needed or min. 500' on center
2. Immediately preceding ditch inlets or drain inlets
3. Just before the drainage enters a water course
4. Just before the drainage leaves the right of way
5. Just before the drainage leaves the construction limits where drainage flows away from the project.

The logs should be cleaned when the sediment has accumulated to a depth of 1/2 the log diameter.

Cleaning and removal of accumulated sediment deposits is incidental and will not be paid for separately.

SHEET 1 OF 3

Texas Department of Transportation — Design Division Standard

TEMPORARY EROSION, SEDIMENT AND WATER POLLUTION CONTROL MEASURES

EROSION CONTROL LOG

EC(9)-16

FILE: ec916	DN: TxDOT	CK: KM	DW: LS/PT	CK: LS
© TxDOT: JULY 2016	CONT	SECT	JOB	HIGHWAY
REVISIONS				
	DIST	COUNTY		SHEET NO.
				546

DISCLAIMER:
The use of this standard is governed by the "Texas Engineering Practice Act". No warranty of any kind is made by TxDOT for any purpose whatsoever. TxDOT assumes no responsibility for the conversion of this standard to other formats or for incorrect results or damages resulting from its use.

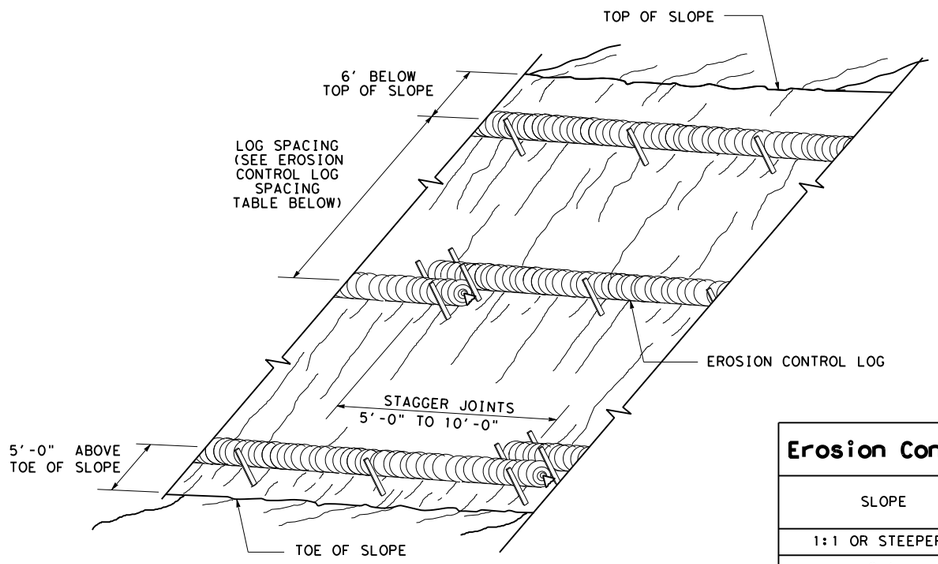

EROSION CONTROL LOGS ON SLOPES
STAKE AND TRENCHING ANCHORING

CL-SST

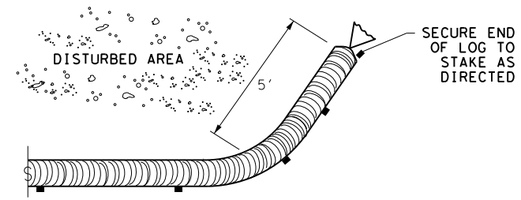

END SECTION RAP DETAIL

Erosion Control Log Spacing Table				
SLOPE	LOG DIAMETER			
	6"	8"	12"	18"
1:1 OR STEEPER	5'	10'	15'	20'
2:1	10'	20'	30'	40'
3:1	15'	30'	45'	60'
4:1 OR FLATTER	20'	40'	60'	80'

* ADJUSTMENTS CAN BE MADE FOR SOIL TYPE:
SOFT, LOAMY SOILS-ADJUST ROWS CLOSER TOGETHER;
HARD, ROCKY SOILS- ADJUST ROWS FARTHER APART

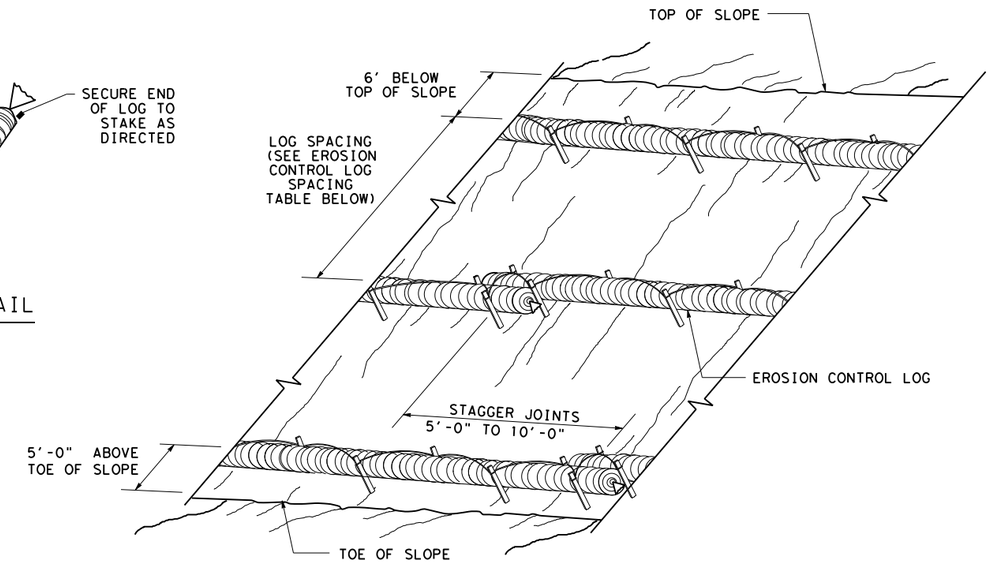

EROSION CONTROL LOGS ON SLOPES
STAKE AND LASHING ANCHORING

CL-SSL

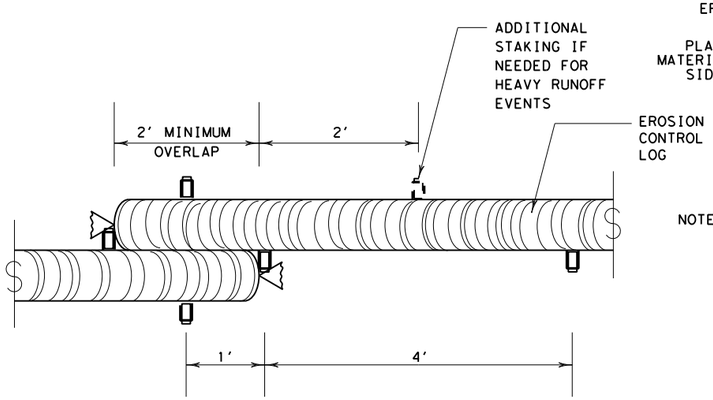

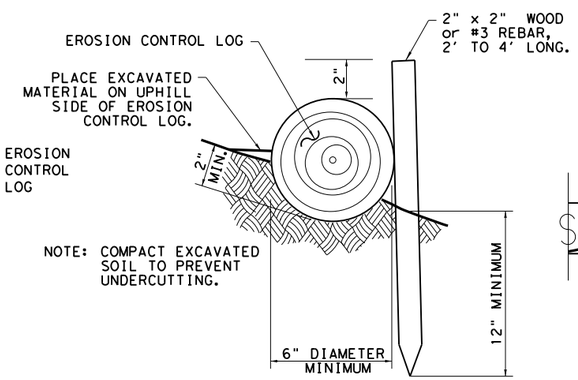

STAKE AND TRENCHING ANCHORING DETAIL

CL-SST

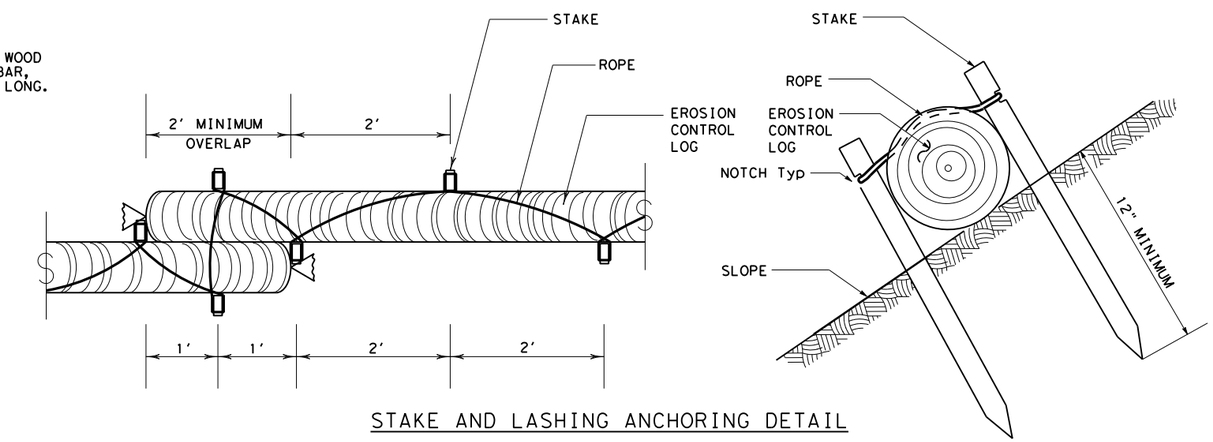

STAKE AND LASHING ANCHORING DETAIL

CL-SSL

TRENCH DEPTH TABLE	
LOG DIAMETER	DEPTH
6"	2"
8"	3"
12"	4"
18"	5"

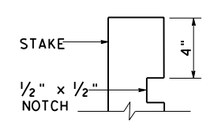

STAKE NOTCH DETAIL

SHEET 2 OF 3

Texas Department of Transportation — Design Division Standard

TEMPORARY EROSION, SEDIMENT AND WATER POLLUTION CONTROL MEASURES

EROSION CONTROL LOG

EC(9)-16

FILE: ec116	DN: TxDOT	CK: KM	DW: LS/PT	CK: LS
© TxDOT: JULY 2016	CONT	SECT	JOB	HIGHWAY
REVISIONS				
	DIST	COUNTY		SHEET NO.
				547

DISCLAIMER:
The use of this standard is governed by the "Texas Engineering Practice Act". No warranty of any kind is made by TxDOT for any purpose whatsoever. TxDOT assumes no responsibility for the conversion of this standard to other formats or for incorrect results or damages resulting from its use.

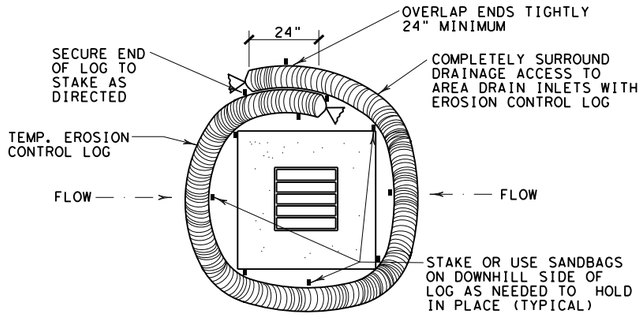

EROSION CONTROL LOG AT DROP INLET

CL-DI

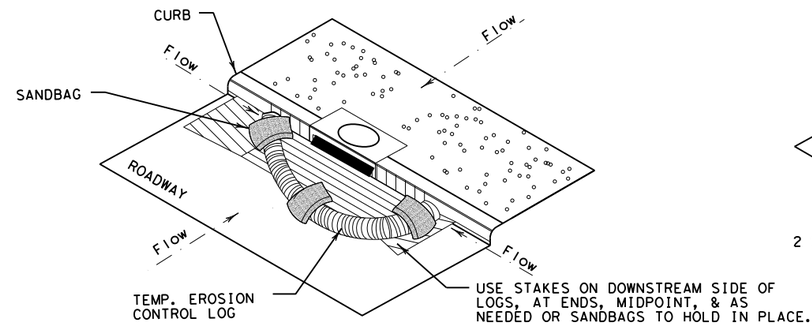

EROSION CONTROL LOG AT CURB INLET

CL-CI

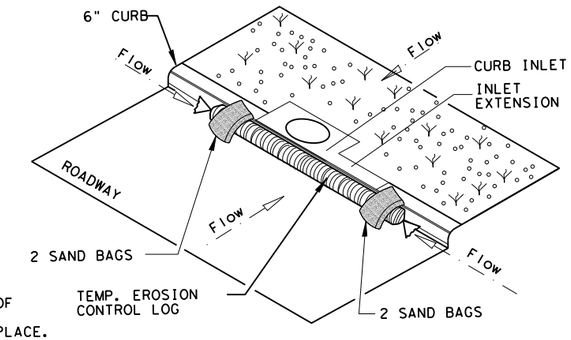

EROSION CONTROL LOG AT CURB INLET

CL-CI

NOTE:
EROSION CONTROL LOGS USED AT CURB INLETS SHOULD ONLY BE USED IF THEY WILL NOT IMPEDE TRAFFIC OR FLOOD THE ROADWAY OR WHEN THE STORM SEWER SYSTEM IS NOT FULLY FUNCTIONAL.

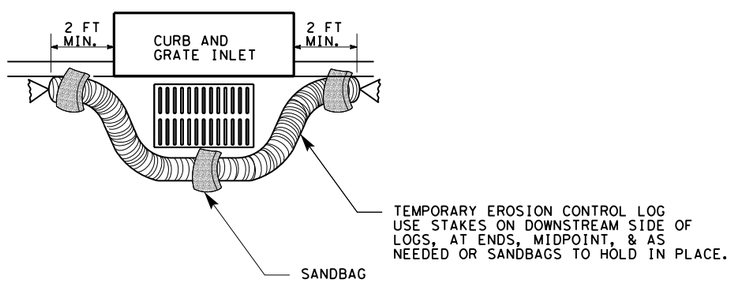

EROSION CONTROL LOG AT CURB & GRADE INLET

CL-GI

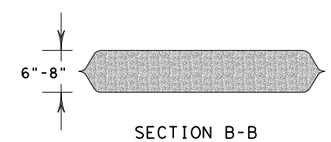

SECTION B-B

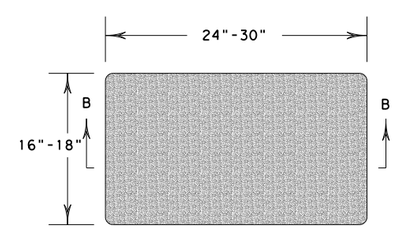

SANDBAG DETAIL

SHEET 3 OF 3

Texas Department of Transportation

Design Division Standard

TEMPORARY EROSION, SEDIMENT AND WATER POLLUTION CONTROL MEASURES

EROSION CONTROL LOG

EC(9)-16

FILE: ec916	DN: TxDOT	CK: KM	DW: LS/PT	CK: LS
© TxDOT: JULY 2016	CONT	SECT	JOB	HIGHWAY
REVISIONS				
	DIST	COUNTY		SHEET NO.
				548

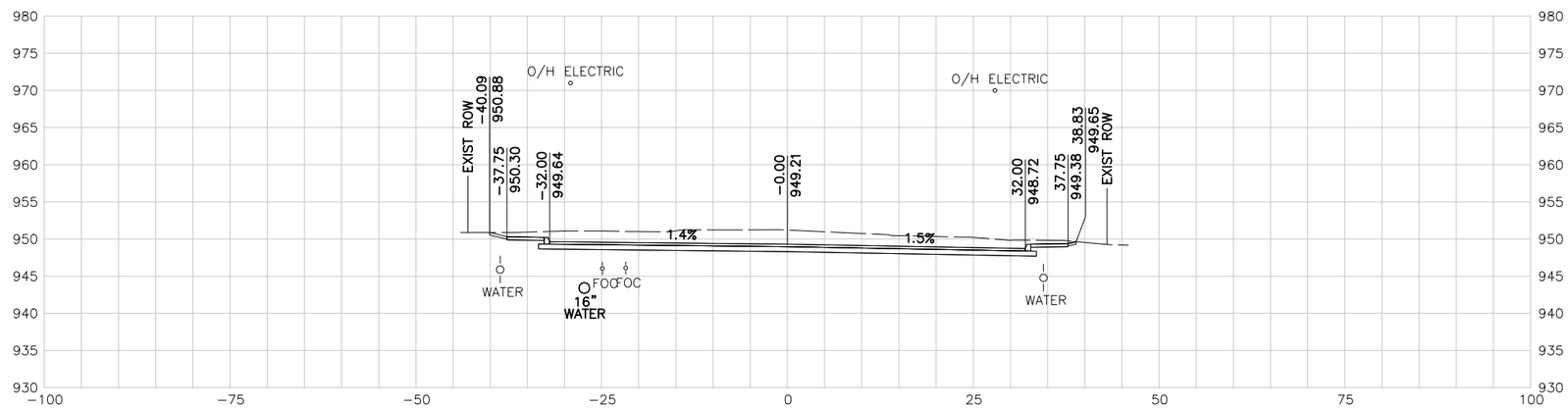

103+00.00 R1

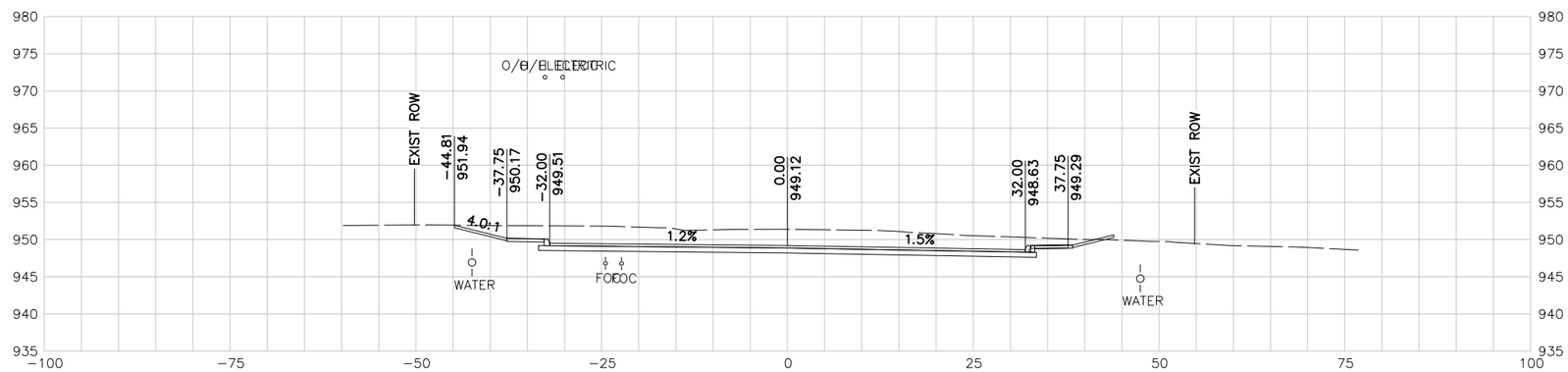

102+50.00 R1

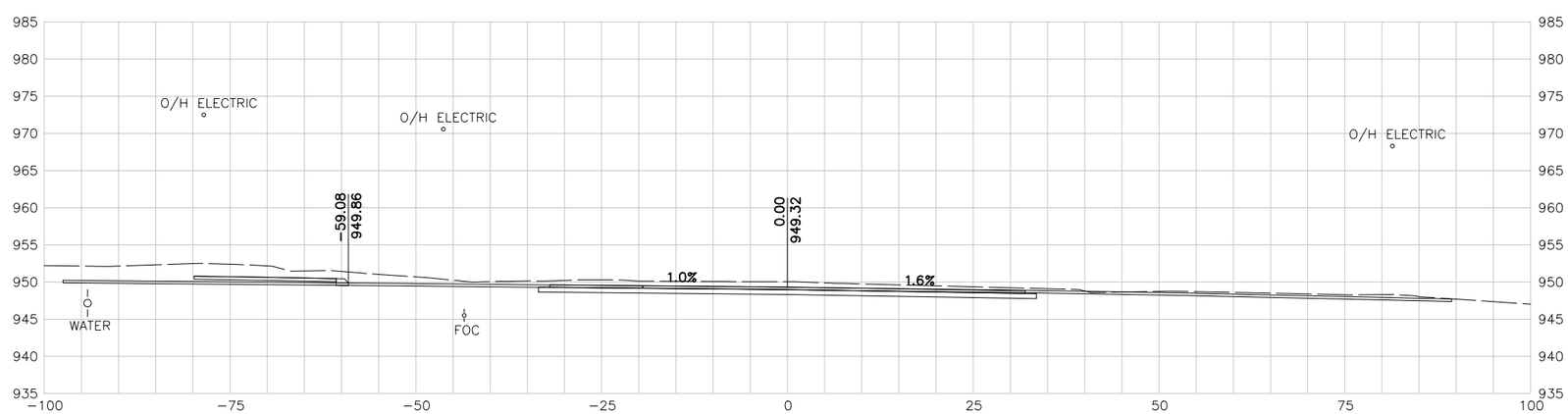

102+00.00 R1

10 5 0 10 20
SCALE FEET

NOTES:

1. UTILITY LOCATIONS ARE APPROXIMATE AND ARE SHOWN FROM THE BEST INFORMATION PROVIDED BY THE UTILITY COMPANIES AT THE TIME PLANS WERE PREPARED.
2. CONTRACTOR SHALL NOTIFY UTILITY COMPANIES AND LOCATE UTILITIES A MINIMUM OF 48 HOURS BEFORE BEGINNING WORK IN AREA.
3. CALL THE TEXAS STATE WIDE ONE CALL LOCATOR NUMBER 1-800-344-8377 48 HOURS BEFORE BEGINNING ANY EXCAVATION.

   DUE TO FEDERAL REGULATION TITLE 49, PART 192.181, CPS MUST MAINTAIN ACCESS TO GAS VALVES AT ALL TIMES. THE CONTRACTOR MUST PROTECT AND WORK AROUND ANY GAS VALVES THAT ARE IN THE PROJECT AREA.

   THE CONTRACTOR WILL BE RESPONSIBLE FOR PROTECTING ALL EXISTING UTILITIES ADJACENT TO THE WORK AREA.
4. SEE CROSS STREET PLAN AND PROFILE SHEETS AND INTERSECTION LAYOUT SHEETS FOR ADDITIONAL INFORMATION AT THE CROSS STREET.
5. SEE DRIVEWAY SUMMARY FOR ADDITIONAL INFORMATION PERTAINING TO DRIVEWAYS.

PRELIMINARY

90% SUBMITTAL
FOR INTERIM REVIEW ONLY
NOT FOR CONSTRUCTION, BIDDING, OR PERMIT PURPOSES.

CP&Y

ENGINEER JAIME AGUILAR
P.E. No. 87606 DATE 2/23/2017

BEXAR COUNTY
PUBLIC WORKS DEPARTMENT

NO	DATE	DESCRIPTION	DWG	CHK

REVISIONS

CP&Y
12500 SAN PEDRO AVENUE, SUITE 450
SAN ANTONIO, TEXAS 78216
TEL (210) 494-8004
FAX (210) 494-8286
T.B.P.E. FIRM # 1741

TALLEY ROAD

CROSS SECTIONS

SHEET 1 OF 88

PROJECT NUMBER:		SHEET NO.
		549
DESIGNED BY: CP&Y	ROADWAY/HIGHWAY:	
CHECKED BY: CP&Y	TALLEY ROAD	
DRAWN BY: CP&Y	STATE	COUNTY
CHECKED BY: CP&Y	TEXAS	BEXAR

cpybw_ANSIB.tbl
cpypdf_ANSIB.pltcfg
pw:/Active Projects/BEXA14048.01/8.00 Plans and Drawings/8.10 Base Files/14048RDxsec_90.dgn
2/23/2017 4:30:54 PM mberon
pw:/Active Projects/BEXA14048.01/8.00 Plans and Drawings/8.10 Base Files/14048RDxsec_90.dgn

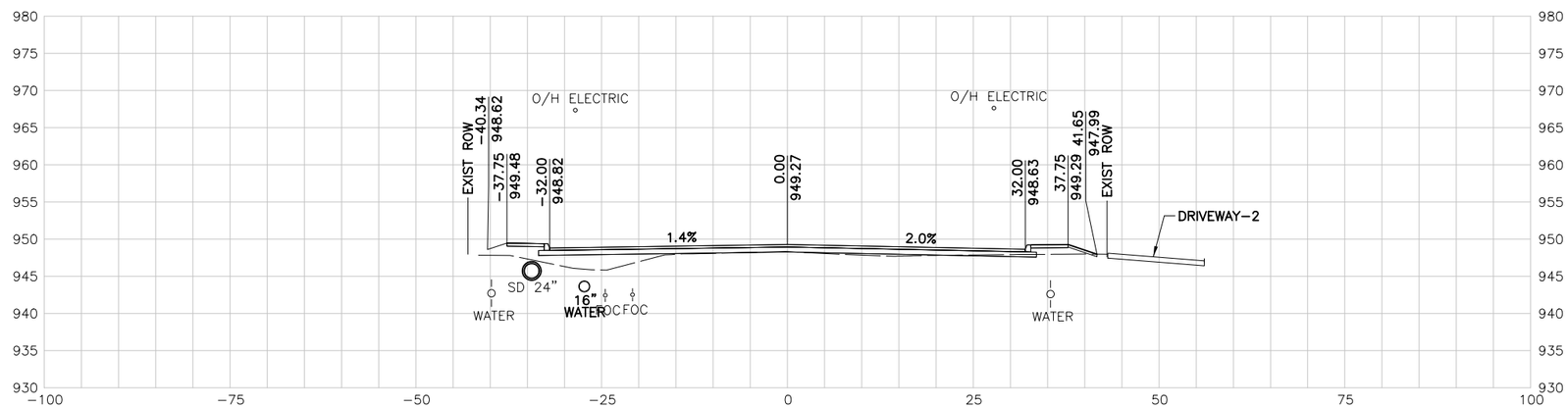

104+50.00 R1

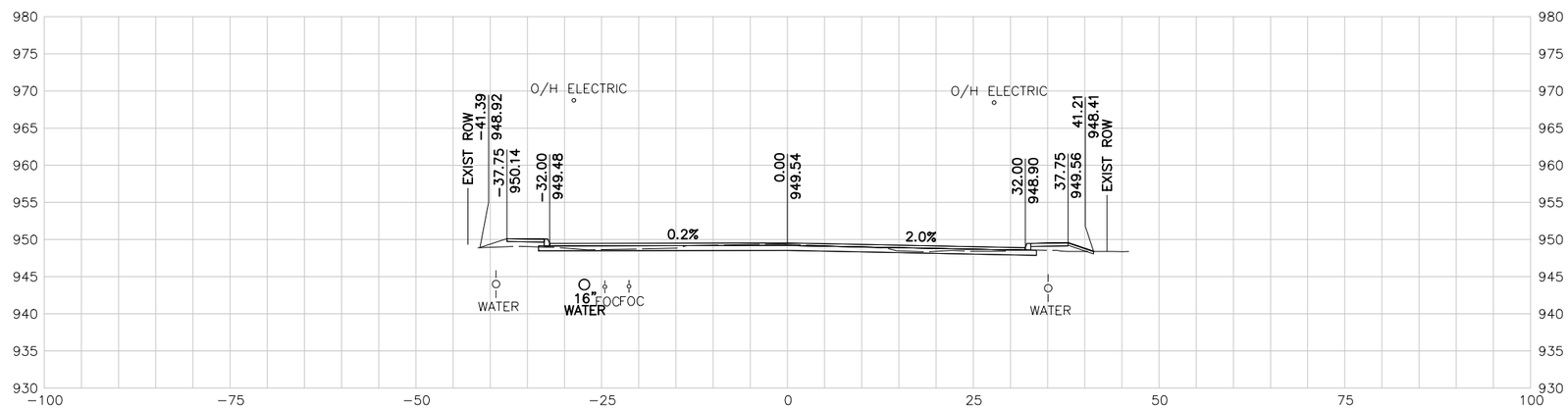

104+00.00 R1

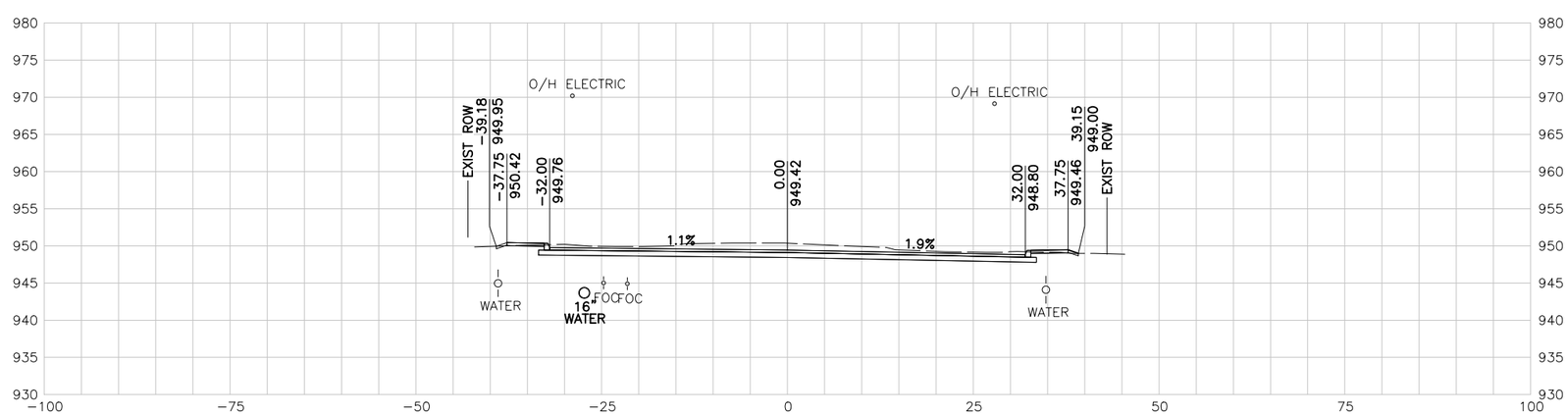

103+50.00 R1

10 5 0 10 20
SCALE FEET

NOTES:

1. UTILITY LOCATIONS ARE APPROXIMATE AND ARE SHOWN FROM THE BEST INFORMATION PROVIDED BY THE UTILITY COMPANIES AT THE TIME PLANS WERE PREPARED.
2. CONTRACTOR SHALL NOTIFY UTILITY COMPANIES AND LOCATE UTILITIES A MINIMUM OF 48 HOURS BEFORE BEGINNING WORK IN AREA.
3. CALL THE TEXAS STATE WIDE ONE CALL LOCATOR NUMBER 1-800-344-8377 48 HOURS BEFORE BEGINNING ANY EXCAVATION.

   DUE TO FEDERAL REGULATION TITLE 49, PART 192.181, CPS MUST MAINTAIN ACCESS TO GAS VALVES AT ALL TIMES. THE CONTRACTOR MUST PROTECT AND WORK AROUND ANY GAS VALVES THAT ARE IN THE PROJECT AREA.

   THE CONTRACTOR WILL BE RESPONSIBLE FOR PROTECTING ALL EXISTING UTILITIES ADJACENT TO THE WORK AREA.
4. SEE CROSS STREET PLAN AND PROFILE SHEETS AND INTERSECTION LAYOUT SHEETS FOR ADDITIONAL INFORMATION AT THE CROSS STREET.
5. SEE DRIVEWAY SUMMARY FOR ADDITIONAL INFORMATION PERTAINING TO DRIVEWAYS.

PRELIMINARY

90% SUBMITTAL
FOR INTERIM REVIEW ONLY
NOT FOR CONSTRUCTION, BIDDING, OR PERMIT PURPOSES.

CP&Y

ENGINEER JAIME AGUILAR
P.E. No. 87606 DATE 2/23/2017

BEXAR COUNTY
PUBLIC WORKS DEPARTMENT

NO	DATE	DESCRIPTION	DWG	CHK

REVISIONS

CP&Y
12500 SAN PEDRO AVENUE, SUITE 450
SAN ANTONIO, TEXAS 78216
TEL (210) 494-8004
FAX (210) 494-8286
T.B.P.E. FIRM # 1741

TALLEY ROAD

CROSS SECTIONS

SHEET 2 OF 88

PROJECT NUMBER:		SHEET NO.	
		550	
DESIGNED BY:	CP&Y	ROADWAY/HIGHWAY:	
CHECKED BY:	CP&Y	TALLEY ROAD	
DRAWN BY:	CP&Y	STATE	COUNTY
CHECKED BY:	CP&Y	TEXAS	BEXAR

cpybw_ANSIB.tbl
cpycd_ANSIB.pltcfg
pw:/Active Projects/BEXA14048.01/8.00 Plans and Drawings/8.10 Base Files/14048RDxsec_90.dgn
2/23/2017 4:30:55 PM mberan
pw:/Active Projects/BEXA14048.01/8.00 Plans and Drawings/8.10 Base Files/14048RDxsec_90.dgn

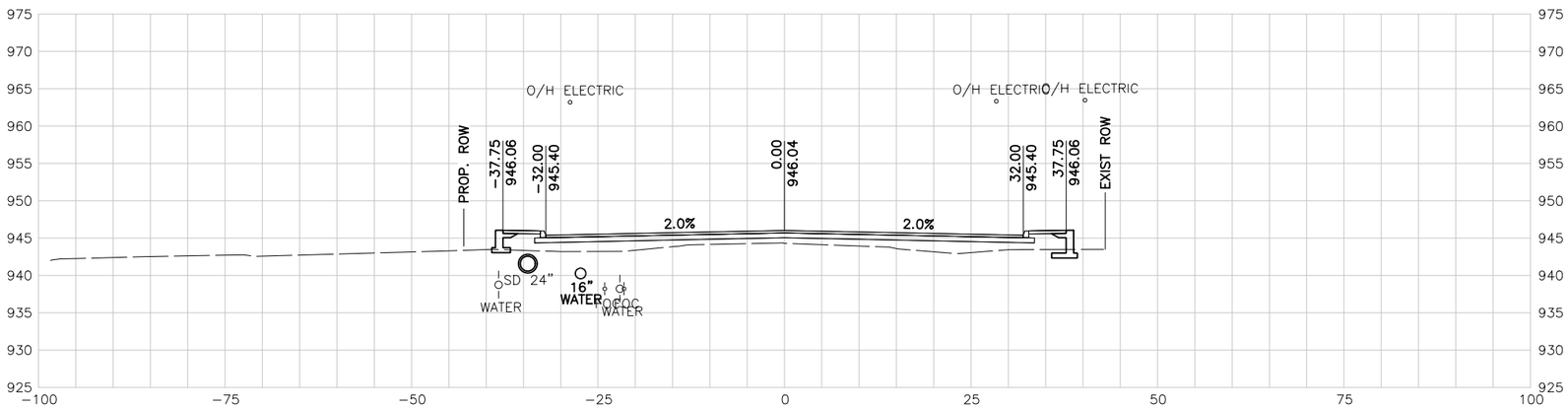

106+00.00 R1

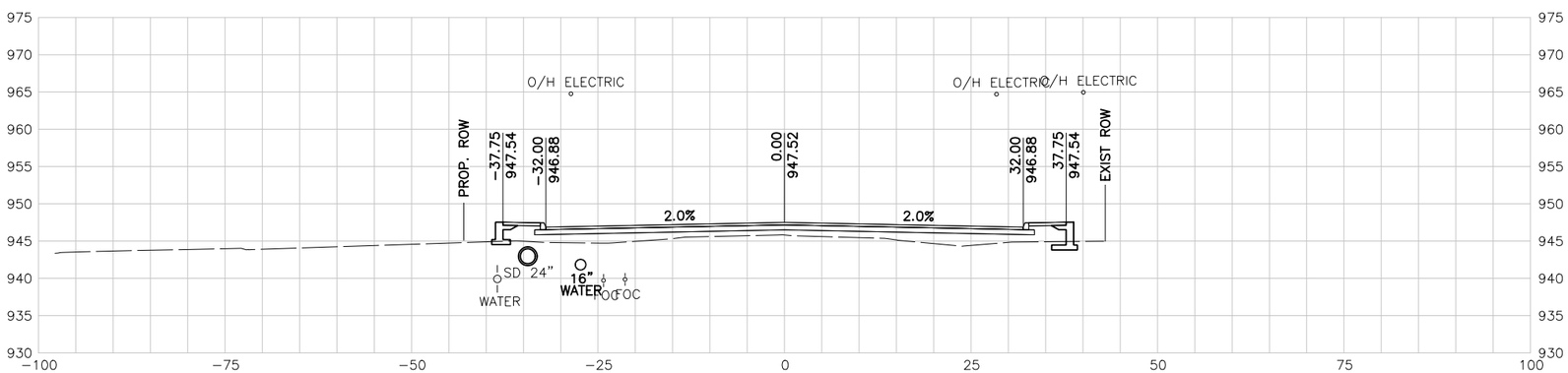

105+50.00 R1

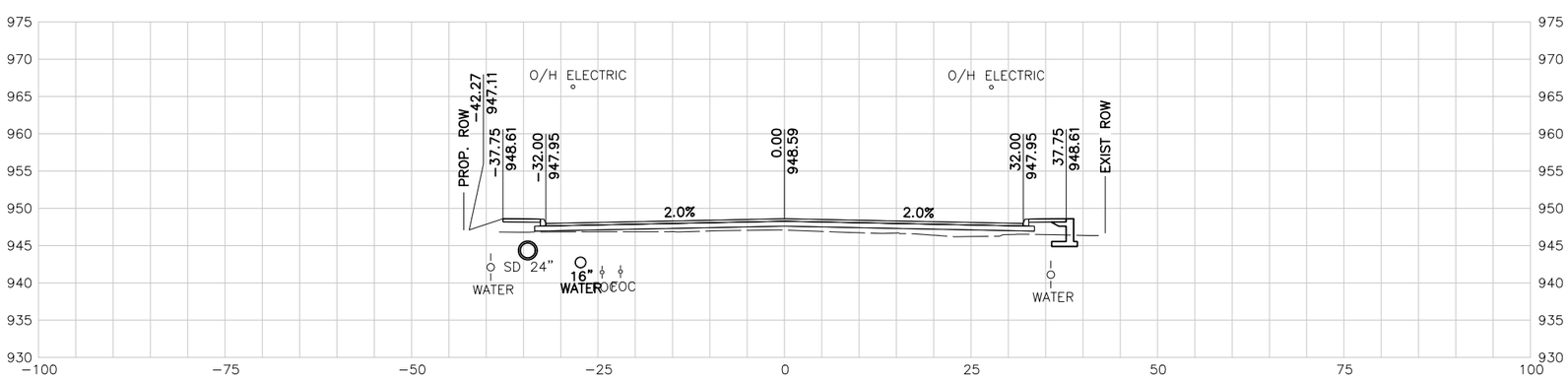

105+00.00 R1

10 5 0 10 20
SCALE FEET

NOTES:

1. UTILITY LOCATIONS ARE APPROXIMATE AND ARE SHOWN FROM THE BEST INFORMATION PROVIDED BY THE UTILITY COMPANIES AT THE TIME PLANS WERE PREPARED.
2. CONTRACTOR SHALL NOTIFY UTILITY COMPANIES AND LOCATE UTILITIES A MINIMUM OF 48 HOURS BEFORE BEGINNING WORK IN AREA.
3. CALL THE TEXAS STATE WIDE ONE CALL LOCATOR NUMBER 1-800-344-8377 48 HOURS BEFORE BEGINNING ANY EXCAVATION.

   DUE TO FEDERAL REGULATION TITLE 49, PART 192.181, CPS MUST MAINTAIN ACCESS TO GAS VALVES AT ALL TIMES. THE CONTRACTOR MUST PROTECT AND WORK AROUND ANY GAS VALVES THAT ARE IN THE PROJECT AREA.

   THE CONTRACTOR WILL BE RESPONSIBLE FOR PROTECTING ALL EXISTING UTILITIES ADJACENT TO THE WORK AREA.
4. SEE CROSS STREET PLAN AND PROFILE SHEETS AND INTERSECTION LAYOUT SHEETS FOR ADDITIONAL INFORMATION AT THE CROSS STREET.
5. SEE DRIVEWAY SUMMARY FOR ADDITIONAL INFORMATION PERTAINING TO DRIVEWAYS.

PRELIMINARY

90% SUBMITTAL
FOR INTERIM REVIEW ONLY
NOT FOR CONSTRUCTION, BIDDING, OR PERMIT PURPOSES.

CP&Y

ENGINEER JAIME AGUILAR
P.E. No. 87606 DATE 2/23/2017

BEXAR COUNTY
PUBLIC WORKS DEPARTMENT

NO	DATE	DESCRIPTION	DWG	CHK

REVISIONS

CP&Y
12500 SAN PEDRO AVENUE, SUITE 450
SAN ANTONIO, TEXAS 78216
TEL (210) 494-8004
FAX (210) 494-8286
T.B.P.E. FIRM # 1741

TALLEY ROAD

CROSS SECTIONS

SHEET 3 OF 88

PROJECT NUMBER:		SHEET NO.	
		551	
DESIGNED BY:	CP&Y	ROADWAY/HIGHWAY:	
CHECKED BY:	CP&Y	TALLEY ROAD	
DRAWN BY:	CP&Y	STATE	COUNTY
CHECKED BY:	CP&Y	TEXAS	BEXAR

2/23/2017 4:30:55 PM mberon
cpybw_ANSIB.tbl
cpypdf_ANSIB.pltcfg
pw:/Active Projects/BEXA14048.01/8.00 Plans and Drawings/8.10 Base Files/14048RDxsec_90.dgn

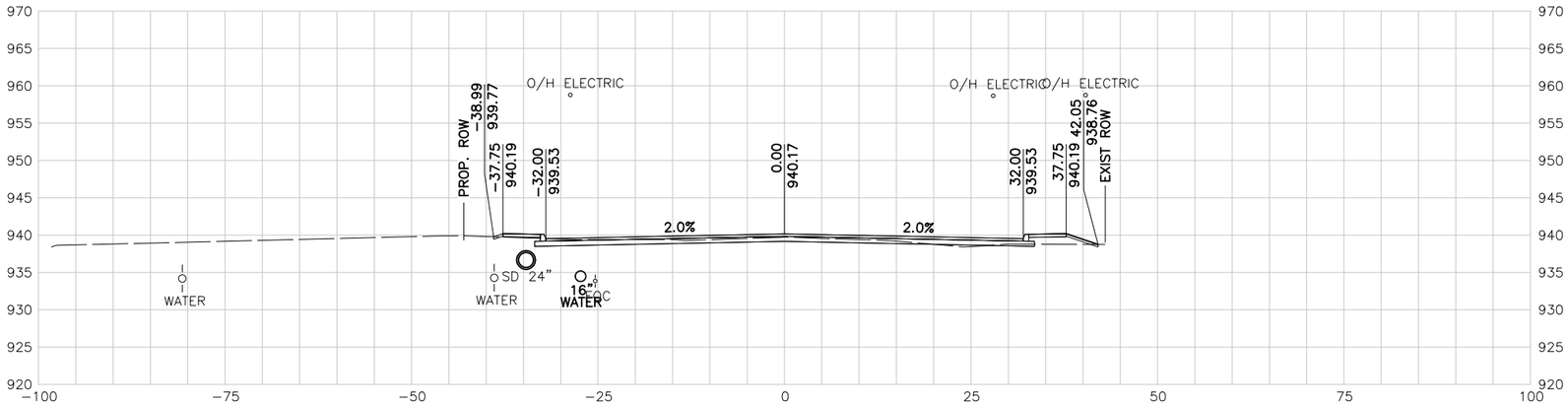

107+50.00 R1

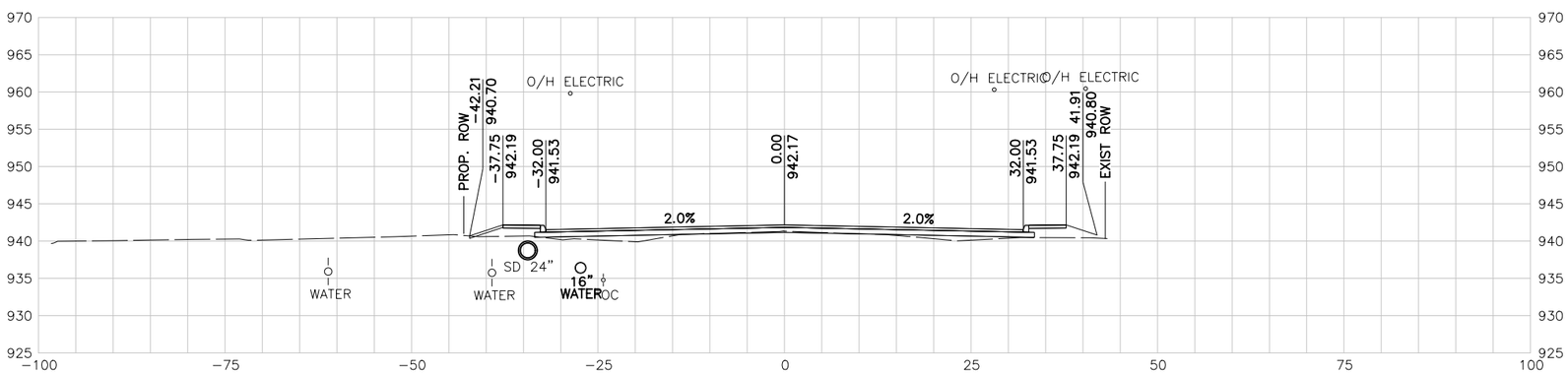

107+00.00 R1

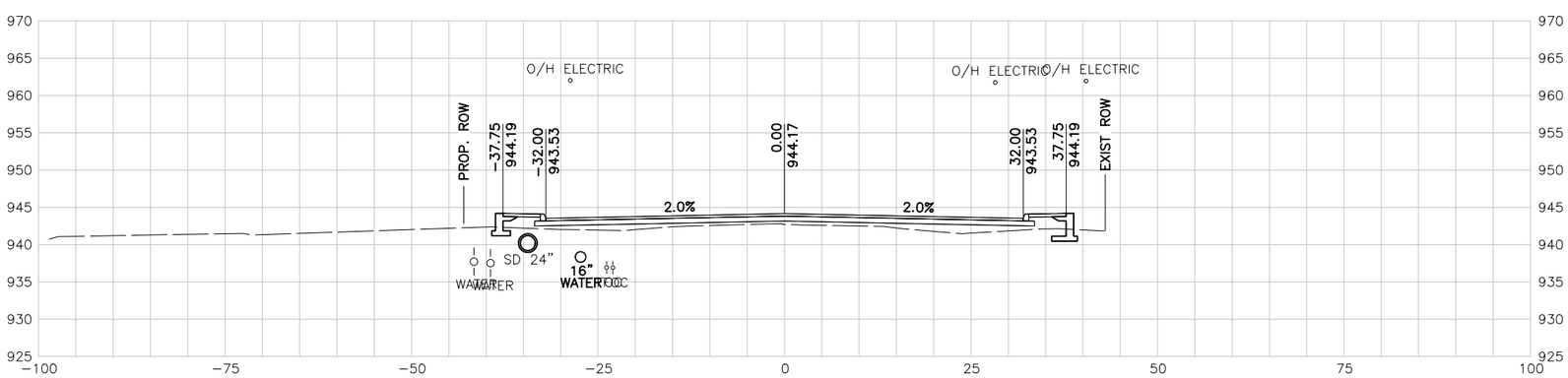

106+50.00 R1

10 5 0 10 20
SCALE FEET

NOTES:

1. UTILITY LOCATIONS ARE APPROXIMATE AND ARE SHOWN FROM THE BEST INFORMATION PROVIDED BY THE UTILITY COMPANIES AT THE TIME PLANS WERE PREPARED.
2. CONTRACTOR SHALL NOTIFY UTILITY COMPANIES AND LOCATE UTILITIES A MINIMUM OF 48 HOURS BEFORE BEGINNING WORK IN AREA.
3. CALL THE TEXAS STATE WIDE ONE CALL LOCATOR NUMBER 1-800-344-8377 48 HOURS BEFORE BEGINNING ANY EXCAVATION.

   DUE TO FEDERAL REGULATION TITLE 49, PART 192.181, CPS MUST MAINTAIN ACCESS TO GAS VALVES AT ALL TIMES. THE CONTRACTOR MUST PROTECT AND WORK AROUND ANY GAS VALVES THAT ARE IN THE PROJECT AREA.

   THE CONTRACTOR WILL BE RESPONSIBLE FOR PROTECTING ALL EXISTING UTILITIES ADJACENT TO THE WORK AREA.
4. SEE CROSS STREET PLAN AND PROFILE SHEETS AND INTERSECTION LAYOUT SHEETS FOR ADDITIONAL INFORMATION AT THE CROSS STREET.
5. SEE DRIVEWAY SUMMARY FOR ADDITIONAL INFORMATION PERTAINING TO DRIVEWAYS.

PRELIMINARY

90% SUBMITTAL
FOR INTERIM REVIEW ONLY
NOT FOR CONSTRUCTION, BIDDING, OR PERMIT PURPOSES.

CP&Y

ENGINEER JAIME AGUILAR
P.E. No. 87606 DATE 2/23/2017

BEXAR COUNTY
PUBLIC WORKS DEPARTMENT

NO	DATE	DESCRIPTION	DWG	CHK

REVISIONS

CP&Y
12500 SAN PEDRO AVENUE, SUITE 450
SAN ANTONIO, TEXAS 78216
TEL (210) 494-8004
FAX (210) 494-8286
T.B.P.E. FIRM # 1741

TALLEY ROAD

CROSS SECTIONS

SHEET 4 OF 88

PROJECT NUMBER:		SHEET NO.	
		552	
DESIGNED BY:	CP&Y	ROADWAY/HIGHWAY:	
CHECKED BY:	CP&Y	TALLEY ROAD	
DRAWN BY:	CP&Y	STATE	COUNTY
CHECKED BY:	CP&Y	TEXAS	BEXAR

cpybw_ANSIB.tbl
cpycd_ANSIB.pltcfg
pw:/Active Projects/BEXA14048.01/8.00 Plans and Drawings/8.10 Base Files/14048RDxsec_90.dgn
2/23/2017 4:30:56 PM mberan
pw:/Active Projects/BEXA14048.01/8.00 Plans and Drawings/8.10 Base Files/14048RDxsec_90.dgn

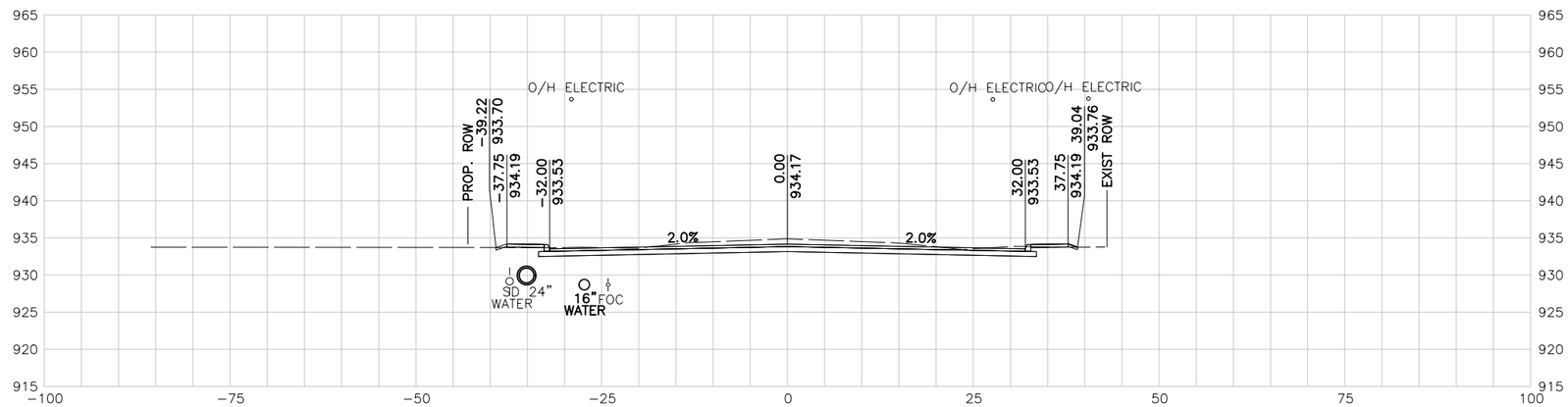

109+00.00 R1

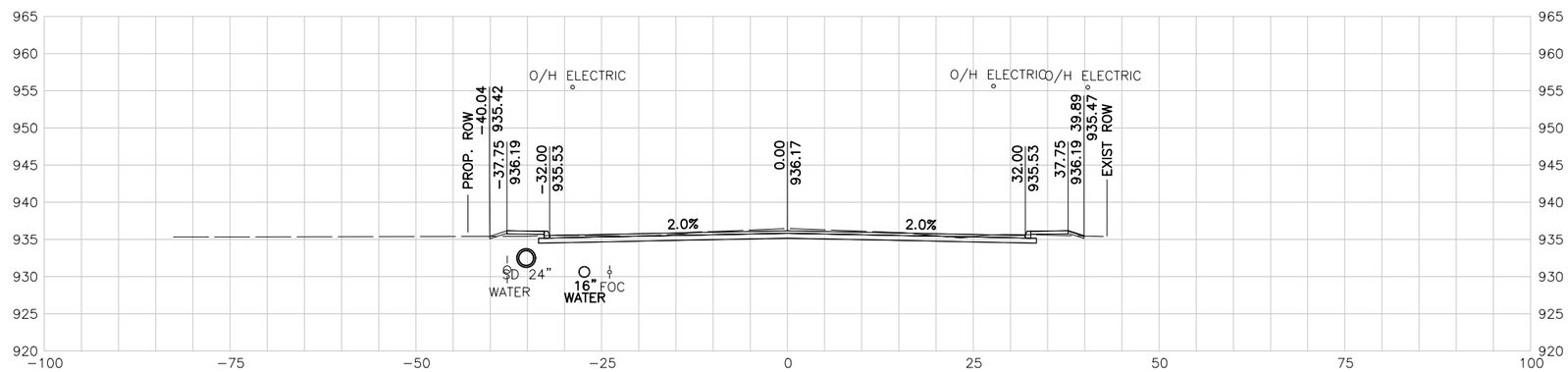

108+50.00 R1

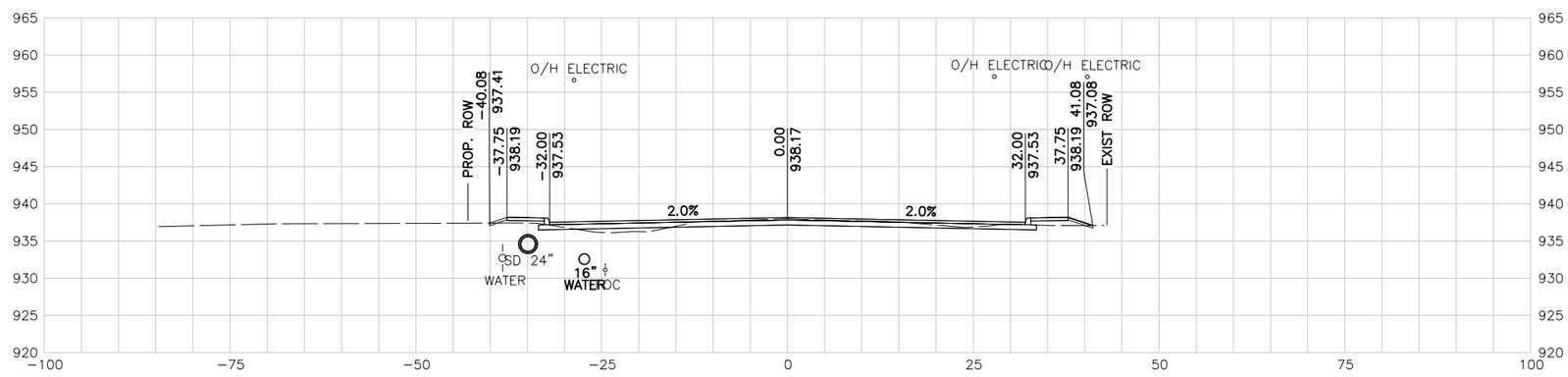

108+00.00 R1

10 5 0 10 20
SCALE FEET

NOTES:

1. UTILITY LOCATIONS ARE APPROXIMATE AND ARE SHOWN FROM THE BEST INFORMATION PROVIDED BY THE UTILITY COMPANIES AT THE TIME PLANS WERE PREPARED.
2. CONTRACTOR SHALL NOTIFY UTILITY COMPANIES AND LOCATE UTILITIES A MINIMUM OF 48 HOURS BEFORE BEGINNING WORK IN AREA.
3. CALL THE TEXAS STATE WIDE ONE CALL LOCATOR NUMBER 1-800-344-8377 48 HOURS BEFORE BEGINNING ANY EXCAVATION.

   DUE TO FEDERAL REGULATION TITLE 49, PART 192.181, CPS MUST MAINTAIN ACCESS TO GAS VALVES AT ALL TIMES. THE CONTRACTOR MUST PROTECT AND WORK AROUND ANY GAS VALVES THAT ARE IN THE PROJECT AREA.

   THE CONTRACTOR WILL BE RESPONSIBLE FOR PROTECTING ALL EXISTING UTILITIES ADJACENT TO THE WORK AREA.
4. SEE CROSS STREET PLAN AND PROFILE SHEETS AND INTERSECTION LAYOUT SHEETS FOR ADDITIONAL INFORMATION AT THE CROSS STREET.
5. SEE DRIVEWAY SUMMARY FOR ADDITIONAL INFORMATION PERTAINING TO DRIVEWAYS.

PRELIMINARY

90% SUBMITTAL
FOR INTERIM REVIEW ONLY
NOT FOR CONSTRUCTION, BIDDING, OR PERMIT PURPOSES.

CP&Y

ENGINEER JAIME AGUILAR
P.E. No. 87606 DATE 2/23/2017

BEXAR COUNTY
PUBLIC WORKS DEPARTMENT

NO	DATE	DESCRIPTION	DWG	CHK

REVISIONS

CP&Y
12500 SAN PEDRO AVENUE, SUITE 450
SAN ANTONIO, TEXAS 78216
TEL (210) 494-8004
FAX (210) 494-8286
T.B.P.E. FIRM # 1741

TALLEY ROAD

CROSS SECTIONS

SHEET 5 OF 88

PROJECT NUMBER:		SHEET NO.	
		553	
DESIGNED BY:	CP&Y	ROADWAY/HIGHWAY:	
CHECKED BY:	CP&Y	TALLEY ROAD	
DRAWN BY:	CP&Y	STATE	COUNTY
CHECKED BY:	CP&Y	TEXAS	BEXAR

cpybw_ANSIB.tbl
cpypdf_ANSIB.pltcfg
pw:/Active Projects/BEXA14048.01/8.00 Plans and Drawings/8.10 Base Files/14048RDxsec_90.dgn
2/23/2017 4:30:56 PM mberan
pw:/Active Projects/BEXA14048.01/8.00 Plans and Drawings/8.10 Base Files/14048RDxsec_90.dgn

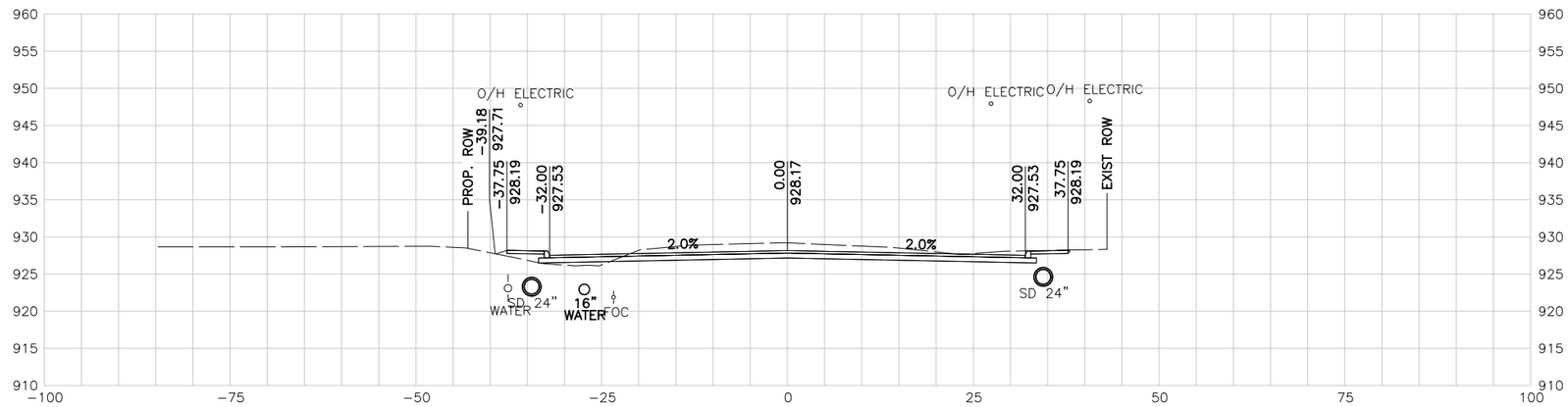

110+50.00 R1

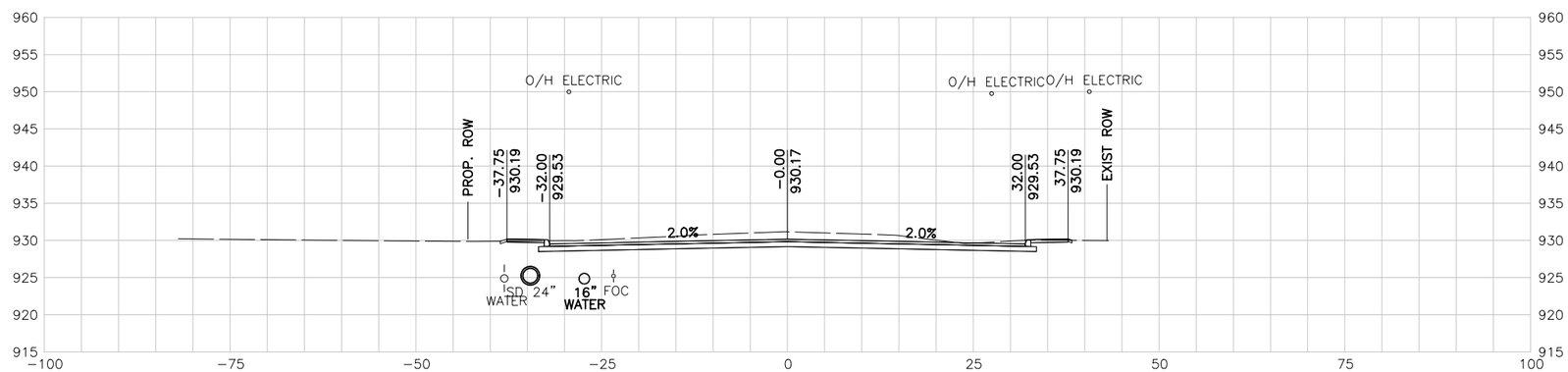

110+00.00 R1

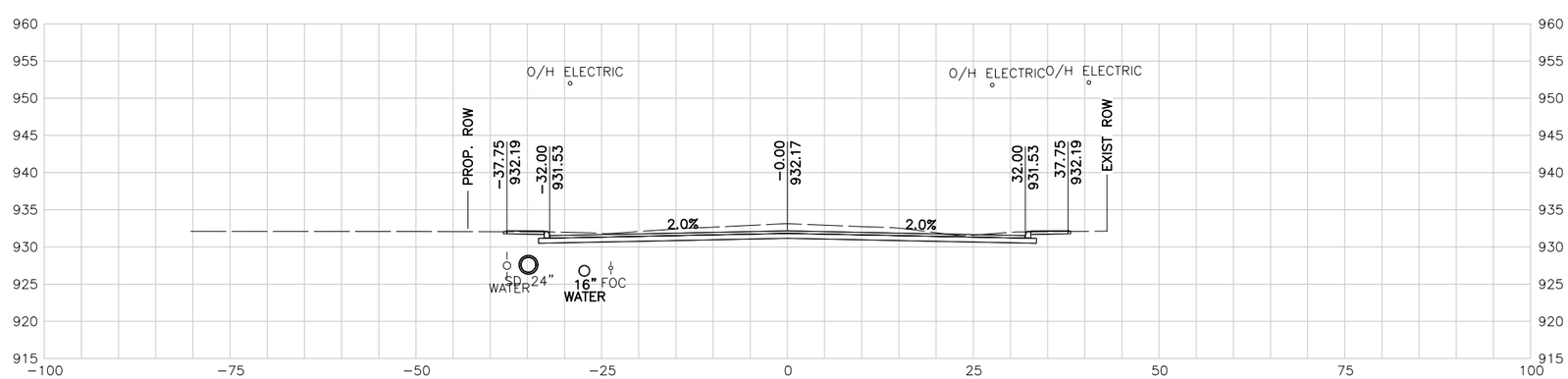

109+50.00 R1

10 5 0 10 20
SCALE FEET

NOTES:

1. UTILITY LOCATIONS ARE APPROXIMATE AND ARE SHOWN FROM THE BEST INFORMATION PROVIDED BY THE UTILITY COMPANIES AT THE TIME PLANS WERE PREPARED.
2. CONTRACTOR SHALL NOTIFY UTILITY COMPANIES AND LOCATE UTILITIES A MINIMUM OF 48 HOURS BEFORE BEGINNING WORK IN AREA.
3. CALL THE TEXAS STATE WIDE ONE CALL LOCATOR NUMBER 1-800-344-8377 48 HOURS BEFORE BEGINNING ANY EXCAVATION.

   DUE TO FEDERAL REGULATION TITLE 49, PART 192.181, CPS MUST MAINTAIN ACCESS TO GAS VALVES AT ALL TIMES. THE CONTRACTOR MUST PROTECT AND WORK AROUND ANY GAS VALVES THAT ARE IN THE PROJECT AREA.

   THE CONTRACTOR WILL BE RESPONSIBLE FOR PROTECTING ALL EXISTING UTILITIES ADJACENT TO THE WORK AREA.
4. SEE CROSS STREET PLAN AND PROFILE SHEETS AND INTERSECTION LAYOUT SHEETS FOR ADDITIONAL INFORMATION AT THE CROSS STREET.
5. SEE DRIVEWAY SUMMARY FOR ADDITIONAL INFORMATION PERTAINING TO DRIVEWAYS.

PRELIMINARY

90% SUBMITTAL
FOR INTERIM REVIEW ONLY
NOT FOR CONSTRUCTION, BIDDING, OR PERMIT PURPOSES.

CP&Y

ENGINEER JAIME AGUILAR
P.E. No. 87606 DATE 2/23/2017

BEXAR COUNTY
PUBLIC WORKS DEPARTMENT

NO	DATE	DESCRIPTION	DWG	CHK

REVISIONS

CP&Y
12500 SAN PEDRO AVENUE, SUITE 450
SAN ANTONIO, TEXAS 78216
TEL (210) 494-8004
FAX (210) 494-8286
T.B.P.E. FIRM # 1741

TALLEY ROAD

CROSS SECTIONS

SHEET 6 OF 88

PROJECT NUMBER:		SHEET NO.	
		554	
DESIGNED BY:	CP&Y	ROADWAY/HIGHWAY:	
CHECKED BY:	CP&Y	TALLEY ROAD	
DRAWN BY:	CP&Y	STATE	COUNTY
CHECKED BY:	CP&Y	TEXAS	BEXAR

cpybw_ANSIB.tbl
cpypdf_ANSIB.pltcfg
pw:/Active Projects/BEXA14048.01/8.00 Plans and Drawings/8.10 Base Files/14048RDxsec_90.dgn
2/23/2017 4:30:57 PM mberan
pw:/Active Projects/BEXA14048.01/8.00 Plans and Drawings/8.10 Base Files/14048RDxsec_90.dgn

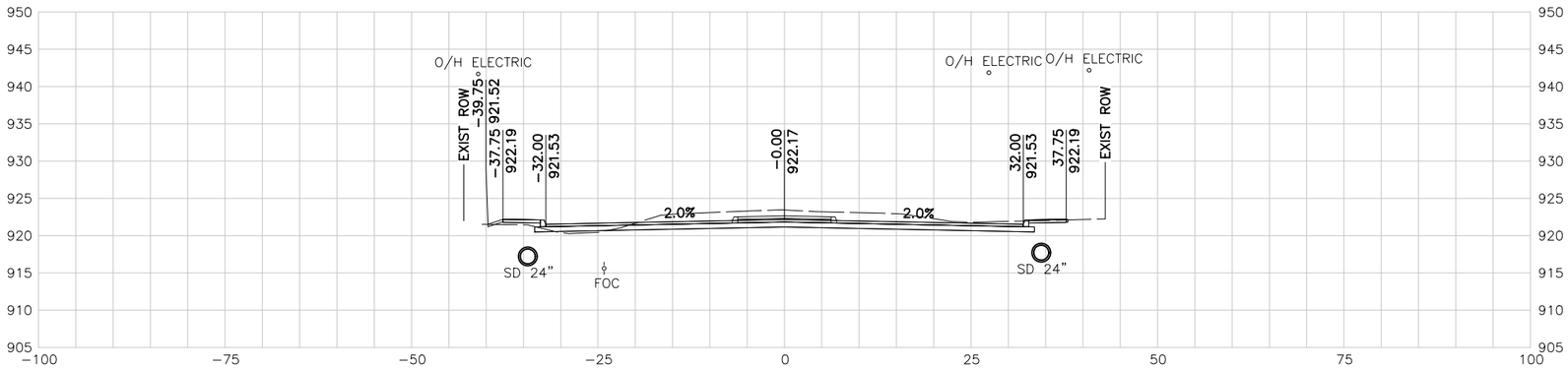

112+00.00 R1

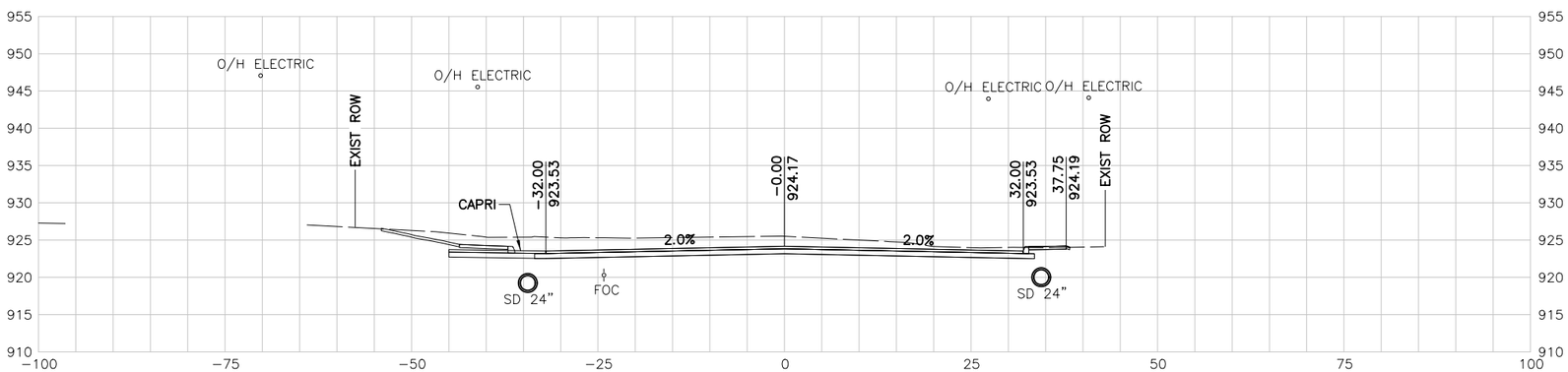

111+50.00 R1

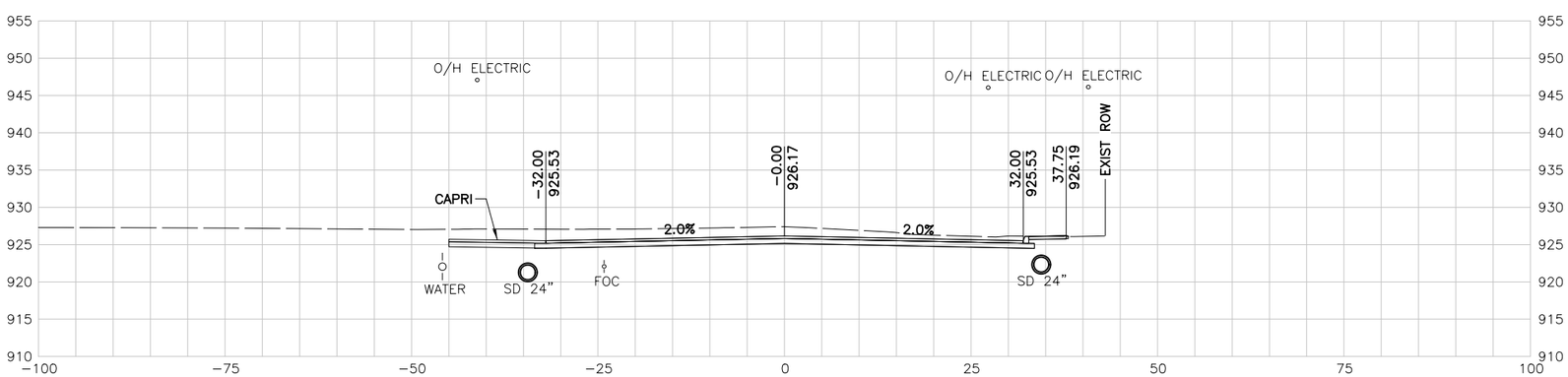

111+00.00 R1

10 5 0 10 20
SCALE FEET

NOTES:

1. UTILITY LOCATIONS ARE APPROXIMATE AND ARE SHOWN FROM THE BEST INFORMATION PROVIDED BY THE UTILITY COMPANIES AT THE TIME PLANS WERE PREPARED.
2. CONTRACTOR SHALL NOTIFY UTILITY COMPANIES AND LOCATE UTILITIES A MINIMUM OF 48 HOURS BEFORE BEGINNING WORK IN AREA.
3. CALL THE TEXAS STATE WIDE ONE CALL LOCATOR NUMBER 1-800-344-8377 48 HOURS BEFORE BEGINNING ANY EXCAVATION.

   DUE TO FEDERAL REGULATION TITLE 49, PART 192.181, CPS MUST MAINTAIN ACCESS TO GAS VALVES AT ALL TIMES. THE CONTRACTOR MUST PROTECT AND WORK AROUND ANY GAS VALVES THAT ARE IN THE PROJECT AREA.

   THE CONTRACTOR WILL BE RESPONSIBLE FOR PROTECTING ALL EXISTING UTILITIES ADJACENT TO THE WORK AREA.
4. SEE CROSS STREET PLAN AND PROFILE SHEETS AND INTERSECTION LAYOUT SHEETS FOR ADDITIONAL INFORMATION AT THE CROSS STREET.
5. SEE DRIVEWAY SUMMARY FOR ADDITIONAL INFORMATION PERTAINING TO DRIVEWAYS.

PRELIMINARY

90% SUBMITTAL
FOR INTERIM REVIEW ONLY
NOT FOR CONSTRUCTION, BIDDING, OR PERMIT PURPOSES.

CP&Y

ENGINEER JAIME AGUILAR
P.E. No. 87606 DATE 2/23/2017

BEXAR COUNTY
PUBLIC WORKS DEPARTMENT

NO	DATE	DESCRIPTION	DWG	CHK

REVISIONS

CP&Y
12500 SAN PEDRO AVENUE, SUITE 450
SAN ANTONIO, TEXAS 78216
TEL (210) 494-8004
FAX (210) 494-8286
T.B.P.E. FIRM # 1741

TALLEY ROAD

CROSS SECTIONS

SHEET 7 OF 88

PROJECT NUMBER:			SHEET NO.
			555
DESIGNED BY:	CP&Y	ROADWAY/HIGHWAY:	
CHECKED BY:	CP&Y	TALLEY ROAD	
DRAWN BY:	CP&Y	STATE	COUNTY
CHECKED BY:	CP&Y	TEXAS	BEXAR

cpybw_ANSIB.tbl
cpypdf_ANSIB.pltcfg
pw:/Active Projects/BEXA14048.01/8.00 Plans and Drawings/8.10 Base Files/14048RDxsec_90.dgn
2/23/2017 4:30:58 PM mberon
pw:/Active Projects/BEXA14048.01/8.00 Plans and Drawings/8.10 Base Files/14048RDxsec_90.dgn

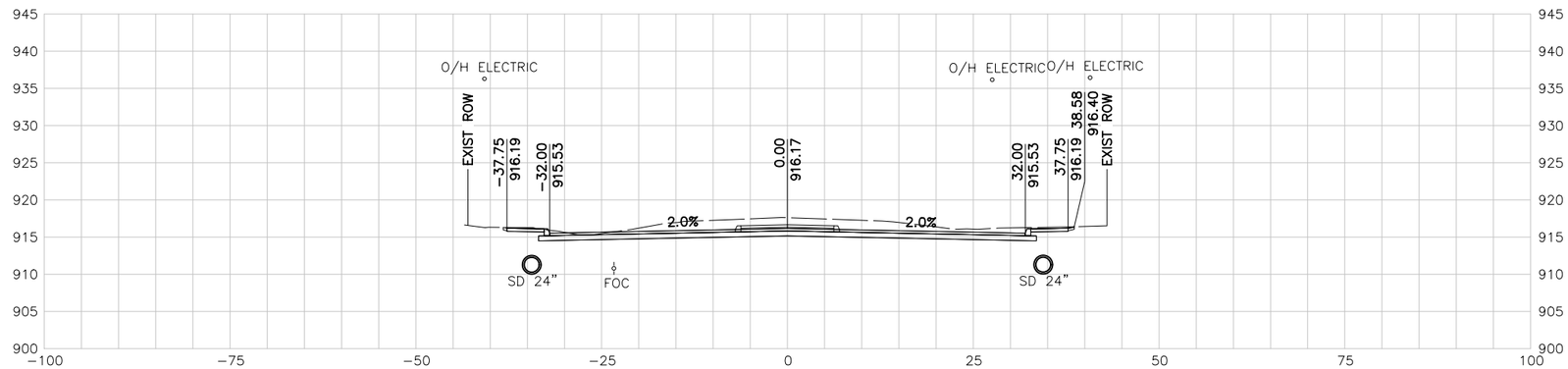

113+50.00 R1

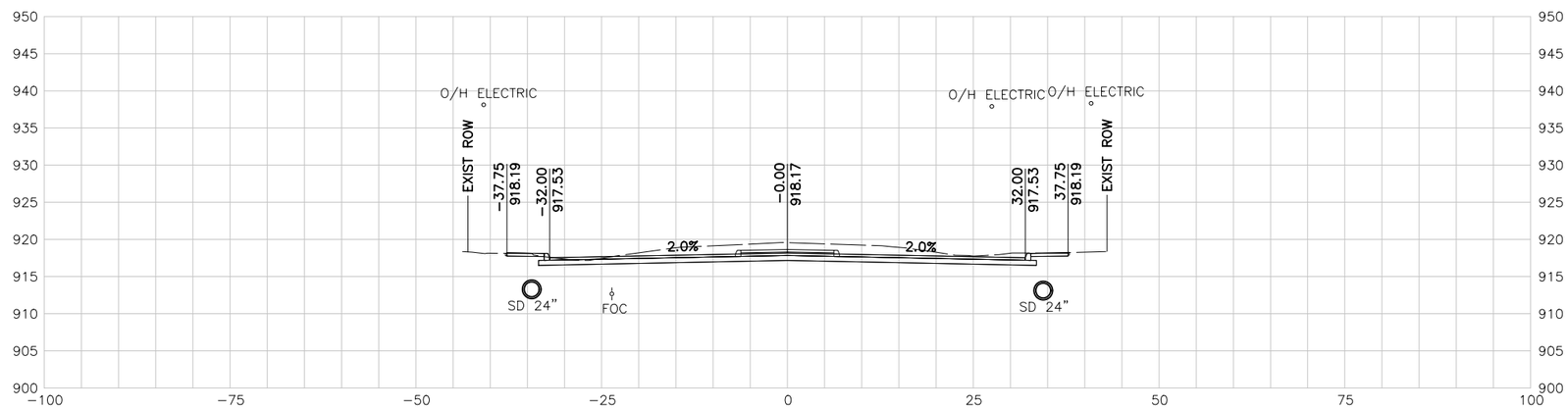

113+00.00 R1

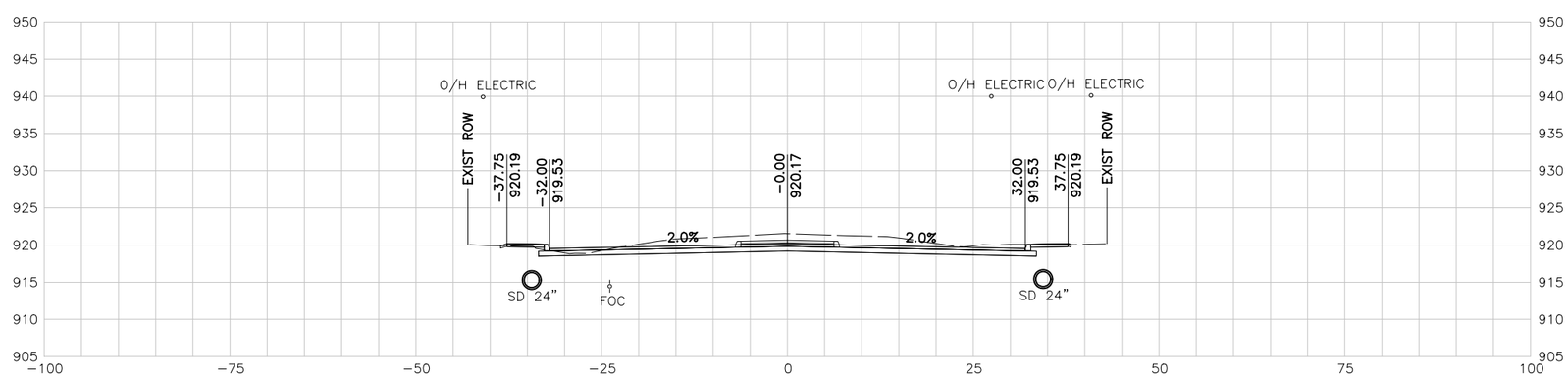

112+50.00 R1

10 5 0 10 20
SCALE FEET

NOTES:

1. UTILITY LOCATIONS ARE APPROXIMATE AND ARE SHOWN FROM THE BEST INFORMATION PROVIDED BY THE UTILITY COMPANIES AT THE TIME PLANS WERE PREPARED.
2. CONTRACTOR SHALL NOTIFY UTILITY COMPANIES AND LOCATE UTILITIES A MINIMUM OF 48 HOURS BEFORE BEGINNING WORK IN AREA.
3. CALL THE TEXAS STATE WIDE ONE CALL LOCATOR NUMBER 1-800-344-8377 48 HOURS BEFORE BEGINNING ANY EXCAVATION.

   DUE TO FEDERAL REGULATION TITLE 49, PART 192.181, CPS MUST MAINTAIN ACCESS TO GAS VALVES AT ALL TIMES. THE CONTRACTOR MUST PROTECT AND WORK AROUND ANY GAS VALVES THAT ARE IN THE PROJECT AREA.

   THE CONTRACTOR WILL BE RESPONSIBLE FOR PROTECTING ALL EXISTING UTILITIES ADJACENT TO THE WORK AREA.
4. SEE CROSS STREET PLAN AND PROFILE SHEETS AND INTERSECTION LAYOUT SHEETS FOR ADDITIONAL INFORMATION AT THE CROSS STREET.
5. SEE DRIVEWAY SUMMARY FOR ADDITIONAL INFORMATION PERTAINING TO DRIVEWAYS.

PRELIMINARY

90% SUBMITTAL
FOR INTERIM REVIEW ONLY
NOT FOR CONSTRUCTION, BIDDING, OR PERMIT PURPOSES.

CP&Y

ENGINEER JAIME AGUILAR
P.E. No. 87606 DATE 2/23/2017

BEXAR COUNTY
PUBLIC WORKS DEPARTMENT

NO	DATE	DESCRIPTION	DWG	CHK

REVISIONS

CP&Y
12500 SAN PEDRO AVENUE, SUITE 450
SAN ANTONIO, TEXAS 78216
TEL (210) 494-8004
FAX (210) 494-8286
T.B.P.E. FIRM # 1741

TALLEY ROAD

CROSS SECTIONS

SHEET 8 OF 88

PROJECT NUMBER:		SHEET NO.
		556
DESIGNED BY: CP&Y	ROADWAY/HIGHWAY:	
CHECKED BY: CP&Y	TALLEY ROAD	
DRAWN BY: CP&Y	STATE	COUNTY
CHECKED BY: CP&Y	TEXAS	BEXAR

cpybw_ANSIB.tbl
cpypdf_ANSIB.pltcfg
pw:/Active Projects/BEXA14048.01/8.00 Plans and Drawings/8.10 Base Files/14048RDxsec_90.dgn
2/23/2017 4:30:58 PM mberon
pw:/Active Projects/BEXA14048.01/8.00 Plans and Drawings/8.10 Base Files/14048RDxsec_90.dgn

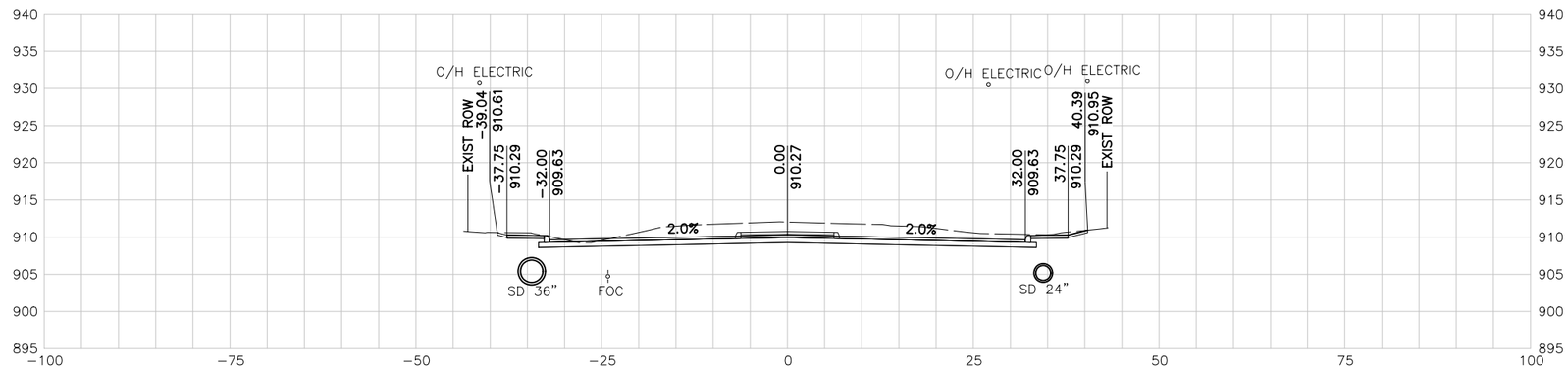

115+00.00 R1

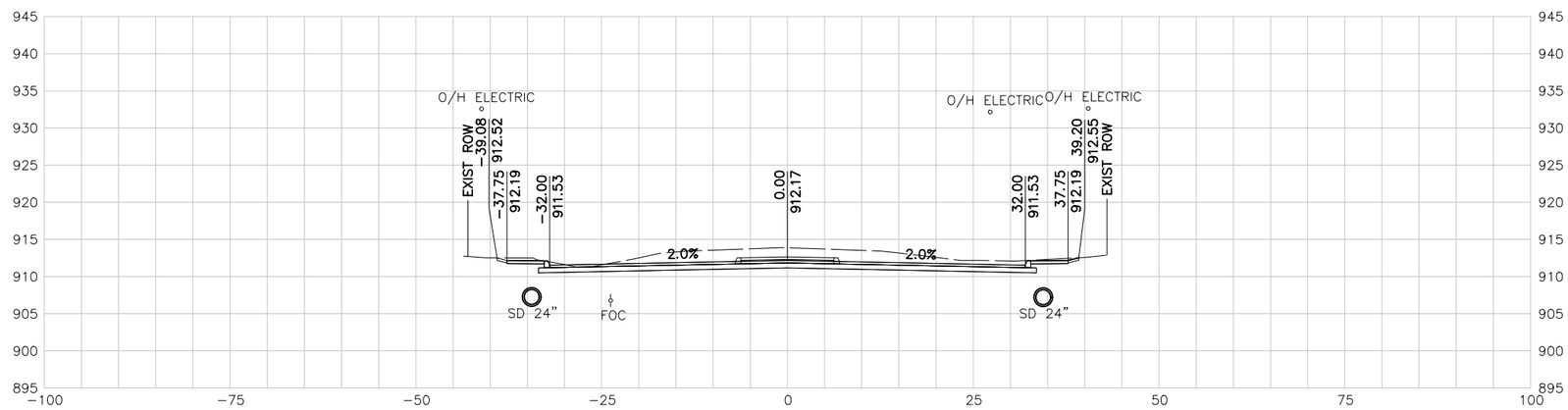

114+50.00 R1

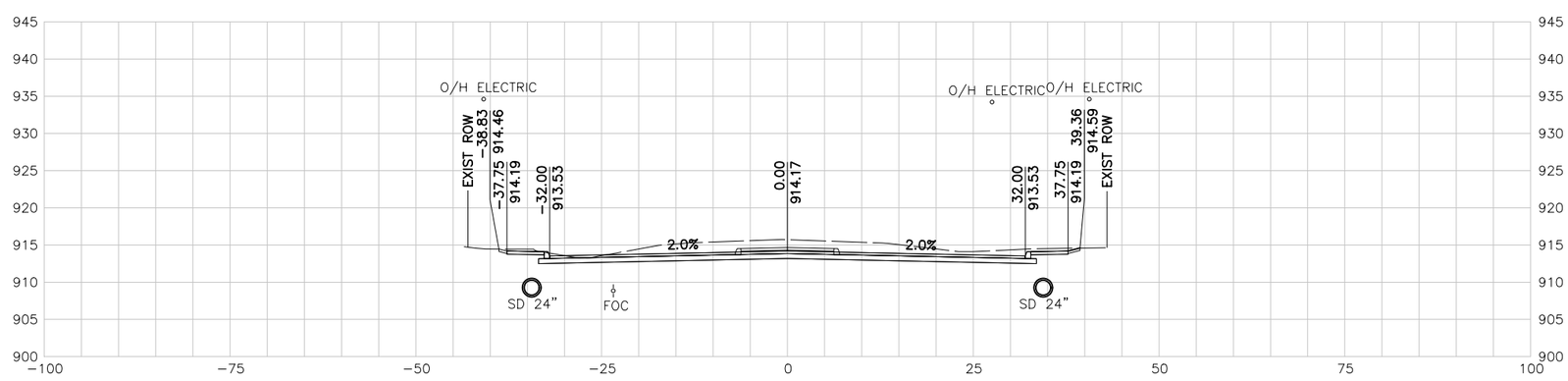

114+00.00 R1

10 5 0 10 20
SCALE FEET

NOTES:

1. UTILITY LOCATIONS ARE APPROXIMATE AND ARE SHOWN FROM THE BEST INFORMATION PROVIDED BY THE UTILITY COMPANIES AT THE TIME PLANS WERE PREPARED.
2. CONTRACTOR SHALL NOTIFY UTILITY COMPANIES AND LOCATE UTILITIES A MINIMUM OF 48 HOURS BEFORE BEGINNING WORK IN AREA.
3. CALL THE TEXAS STATE WIDE ONE CALL LOCATOR NUMBER 1-800-344-8377 48 HOURS BEFORE BEGINNING ANY EXCAVATION.

   DUE TO FEDERAL REGULATION TITLE 49, PART 192.181, CPS MUST MAINTAIN ACCESS TO GAS VALVES AT ALL TIMES. THE CONTRACTOR MUST PROTECT AND WORK AROUND ANY GAS VALVES THAT ARE IN THE PROJECT AREA.

   THE CONTRACTOR WILL BE RESPONSIBLE FOR PROTECTING ALL EXISTING UTILITIES ADJACENT TO THE WORK AREA.
4. SEE CROSS STREET PLAN AND PROFILE SHEETS AND INTERSECTION LAYOUT SHEETS FOR ADDITIONAL INFORMATION AT THE CROSS STREET.
5. SEE DRIVEWAY SUMMARY FOR ADDITIONAL INFORMATION PERTAINING TO DRIVEWAYS.

PRELIMINARY

90% SUBMITTAL
FOR INTERIM REVIEW ONLY
NOT FOR CONSTRUCTION, BIDDING, OR PERMIT PURPOSES.

CP&Y

ENGINEER JAIME AGUILAR
P.E. No. 87606 DATE 2/23/2017

BEXAR COUNTY
PUBLIC WORKS DEPARTMENT

NO	DATE	DESCRIPTION	DWG	CHK

REVISIONS

CP&Y
12500 SAN PEDRO AVENUE, SUITE 450
SAN ANTONIO, TEXAS 78216
TEL (210) 494-8004
FAX (210) 494-8286
T.B.P.E. FIRM # 1741

TALLEY ROAD

CROSS SECTIONS

SHEET 9 OF 88

PROJECT NUMBER:		SHEET NO.
		557
DESIGNED BY: CP&Y	ROADWAY/HIGHWAY:	
CHECKED BY: CP&Y	TALLEY ROAD	
DRAWN BY: CP&Y	STATE	COUNTY
CHECKED BY: CP&Y	TEXAS	BEXAR

2/23/2017 4:30:59 PM mberon pw:/Active Projects/BEXA14048.01/8.00 Plans and Drawings/8.10 Base Files/14048RDxsec_90.dgn
cpybw_ANSIB.tbl
cpypdf_ANSIB.pltcfg
pw:/Active Projects/BEXA14048.01/8.00 Plans and Drawings/8.10 Base Files/14048RDxsec_90.dgn

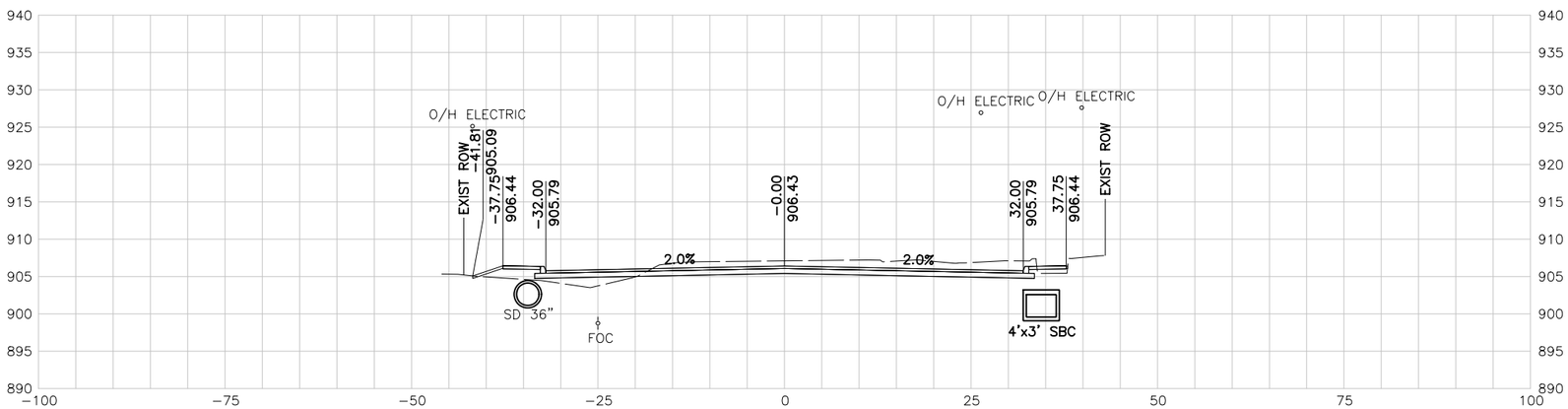

116+50.00 R1

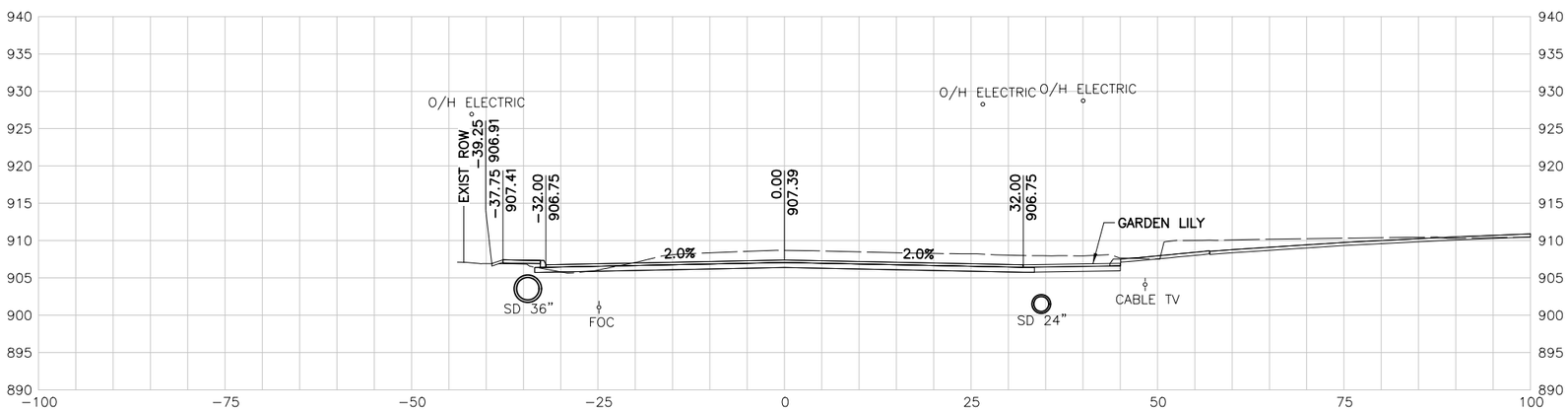

116+00.00 R1

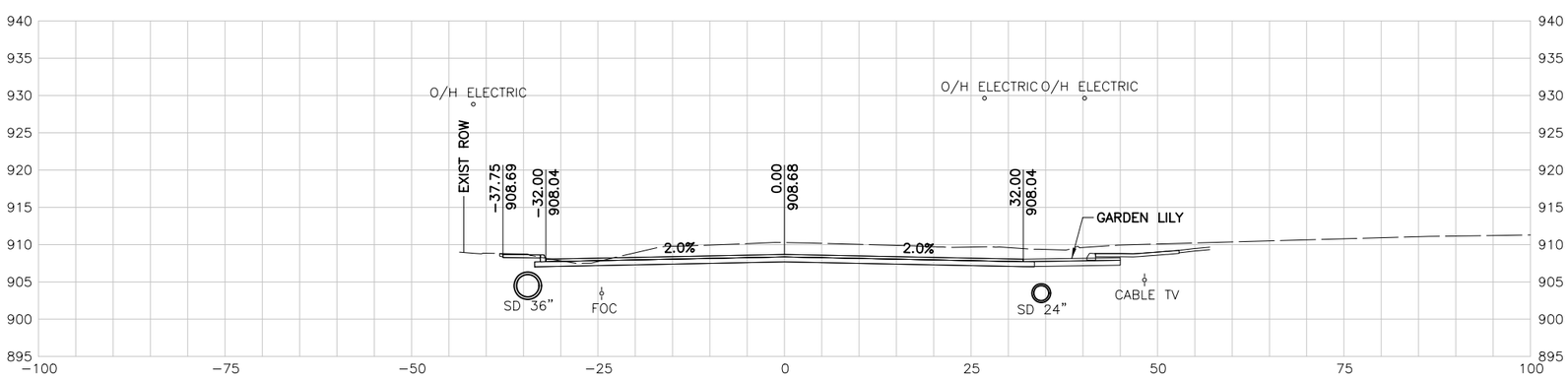

115+50.00 R1

10 5 0 10 20
SCALE FEET

NOTES:

1. UTILITY LOCATIONS ARE APPROXIMATE AND ARE SHOWN FROM THE BEST INFORMATION PROVIDED BY THE UTILITY COMPANIES AT THE TIME PLANS WERE PREPARED.
2. CONTRACTOR SHALL NOTIFY UTILITY COMPANIES AND LOCATE UTILITIES A MINIMUM OF 48 HOURS BEFORE BEGINNING WORK IN AREA.
3. CALL THE TEXAS STATE WIDE ONE CALL LOCATOR NUMBER 1-800-344-8377 48 HOURS BEFORE BEGINNING ANY EXCAVATION.

   DUE TO FEDERAL REGULATION TITLE 49, PART 192.181, CPS MUST MAINTAIN ACCESS TO GAS VALVES AT ALL TIMES. THE CONTRACTOR MUST PROTECT AND WORK AROUND ANY GAS VALVES THAT ARE IN THE PROJECT AREA.

   THE CONTRACTOR WILL BE RESPONSIBLE FOR PROTECTING ALL EXISTING UTILITIES ADJACENT TO THE WORK AREA.
4. SEE CROSS STREET PLAN AND PROFILE SHEETS AND INTERSECTION LAYOUT SHEETS FOR ADDITIONAL INFORMATION AT THE CROSS STREET.
5. SEE DRIVEWAY SUMMARY FOR ADDITIONAL INFORMATION PERTAINING TO DRIVEWAYS.

PRELIMINARY

90% SUBMITTAL
FOR INTERIM REVIEW ONLY
NOT FOR CONSTRUCTION, BIDDING, OR PERMIT PURPOSES.

CP&Y

ENGINEER JAIME AGUILAR
P.E. No. 87606 DATE 2/23/2017

BEXAR COUNTY
PUBLIC WORKS DEPARTMENT

NO	DATE	DESCRIPTION	DWG	CHK

REVISIONS

CP&Y
12500 SAN PEDRO AVENUE, SUITE 450
SAN ANTONIO, TEXAS 78216
TEL (210) 494-8004
FAX (210) 494-8286
T.B.P.E. FIRM # 1741

TALLEY ROAD

CROSS SECTIONS

SHEET 10 OF 88

PROJECT NUMBER:		SHEET NO.	
		558	
DESIGNED BY:	CP&Y	ROADWAY/HIGHWAY:	
CHECKED BY:	CP&Y	TALLEY ROAD	
DRAWN BY:	CP&Y	STATE	COUNTY
CHECKED BY:	CP&Y	TEXAS	BEXAR

cpybw_ANSIB.tbl
cpypdf_ANSIB.pltcfg
pw:/Active Projects/BEXA14048.01/8.00 Plans and Drawings/8.10 Base Files/14048RDxsec_90.dgn
2/23/2017 4:30:59 PM mberon
pw:/Active Projects/BEXA14048.01/8.00 Plans and Drawings/8.10 Base Files/14048RDxsec_90.dgn

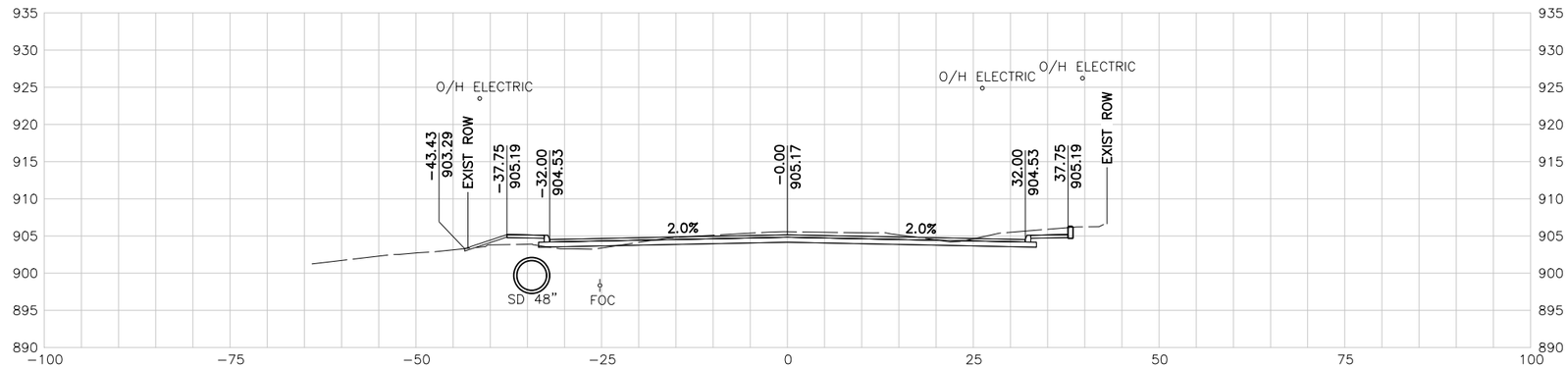

118+00.00 R1

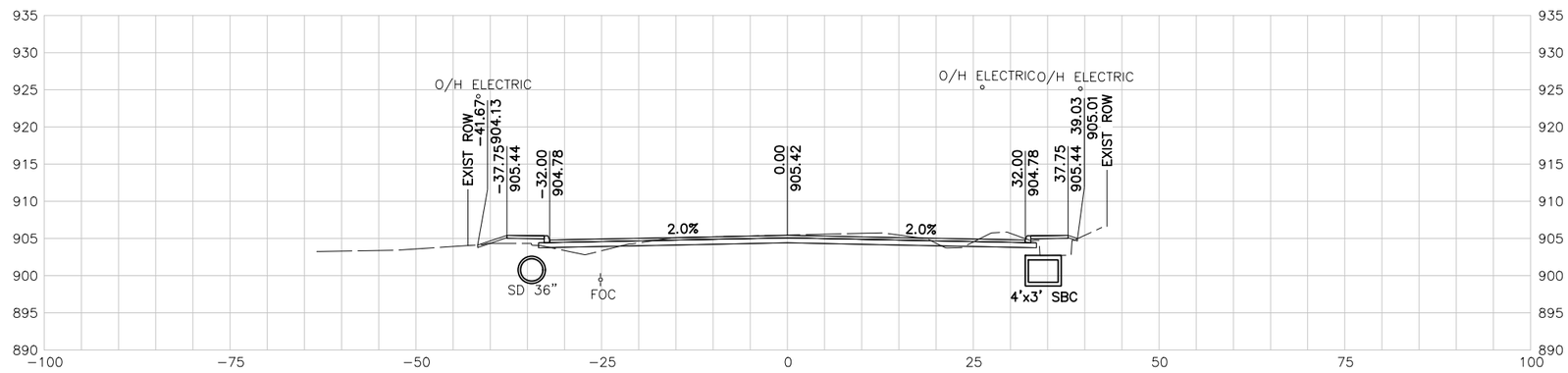

117+50.00 R1

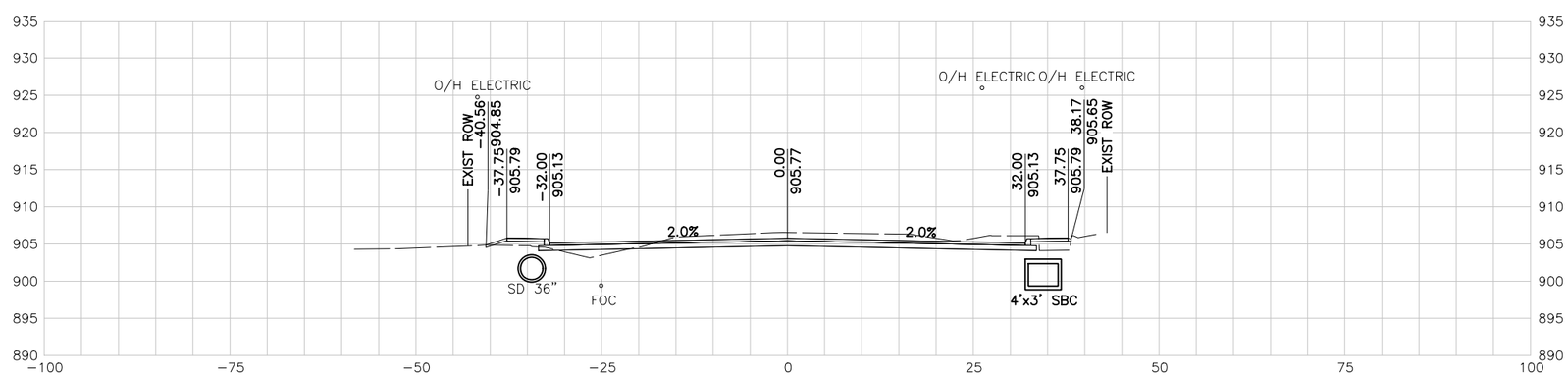

117+00.00 R1

10 5 0 10 20
SCALE FEET

NOTES:

1. UTILITY LOCATIONS ARE APPROXIMATE AND ARE SHOWN FROM THE BEST INFORMATION PROVIDED BY THE UTILITY COMPANIES AT THE TIME PLANS WERE PREPARED.
2. CONTRACTOR SHALL NOTIFY UTILITY COMPANIES AND LOCATE UTILITIES A MINIMUM OF 48 HOURS BEFORE BEGINNING WORK IN AREA.
3. CALL THE TEXAS STATE WIDE ONE CALL LOCATOR NUMBER 1-800-344-8377 48 HOURS BEFORE BEGINNING ANY EXCAVATION.

   DUE TO FEDERAL REGULATION TITLE 49, PART 192.181, CPS MUST MAINTAIN ACCESS TO GAS VALVES AT ALL TIMES. THE CONTRACTOR MUST PROTECT AND WORK AROUND ANY GAS VALVES THAT ARE IN THE PROJECT AREA.

   THE CONTRACTOR WILL BE RESPONSIBLE FOR PROTECTING ALL EXISTING UTILITIES ADJACENT TO THE WORK AREA.
4. SEE CROSS STREET PLAN AND PROFILE SHEETS AND INTERSECTION LAYOUT SHEETS FOR ADDITIONAL INFORMATION AT THE CROSS STREET.
5. SEE DRIVEWAY SUMMARY FOR ADDITIONAL INFORMATION PERTAINING TO DRIVEWAYS.

PRELIMINARY

90% SUBMITTAL
FOR INTERIM REVIEW ONLY
NOT FOR CONSTRUCTION, BIDDING, OR PERMIT PURPOSES.

CP&Y

ENGINEER JAIME AGUILAR
P.E. No. 87606 DATE 2/23/2017

BEXAR COUNTY
PUBLIC WORKS DEPARTMENT

NO	DATE	DESCRIPTION	DWG	CHK

REVISIONS

CP&Y
12500 SAN PEDRO AVENUE, SUITE 450
SAN ANTONIO, TEXAS 78216
TEL (210) 494-8004
FAX (210) 494-8286
T.B.P.E. FIRM # 1741

TALLEY ROAD

CROSS SECTIONS

SHEET 11 OF 88

PROJECT NUMBER:		SHEET NO.	
		559	
DESIGNED BY:	CP&Y	ROADWAY/HIGHWAY:	
CHECKED BY:	CP&Y	TALLEY ROAD	
DRAWN BY:	CP&Y	STATE	COUNTY
CHECKED BY:	CP&Y	TEXAS	BEXAR

cpybw_ANSIB.tbl
cpypdf_ANSIB.pltcfg
pw:/Active Projects/BEXA14048.01/8.00 Plans and Drawings/8.10 Base Files/14048RDxsec_90.dgn
2/23/2017 4:31:00 PM mberan
pw:/Active Projects/BEXA14048.01/8.00 Plans and Drawings/8.10 Base Files/14048RDxsec_90.dgn

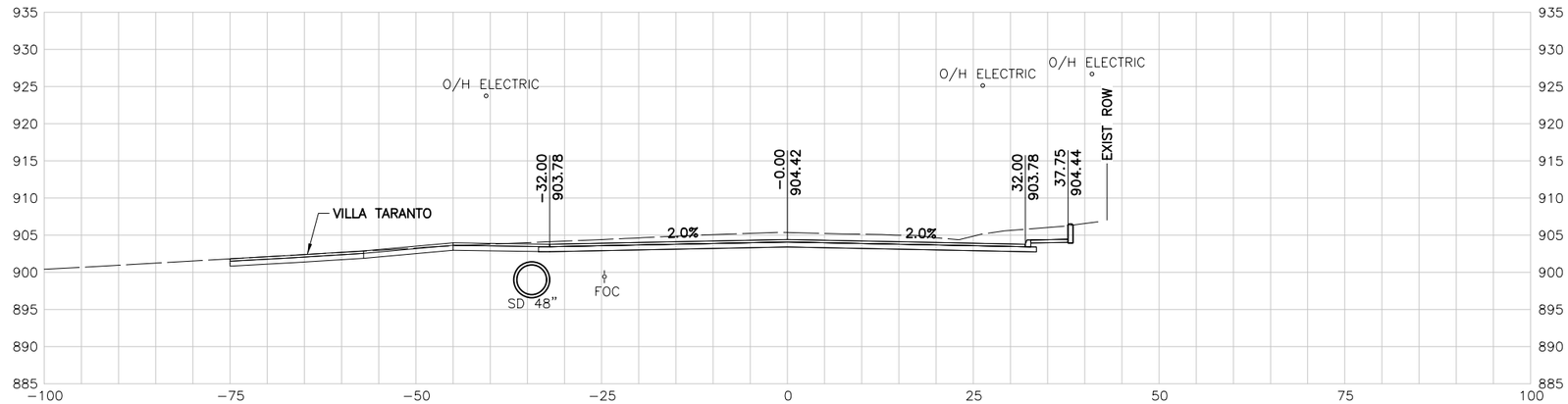

119+50.00 R1

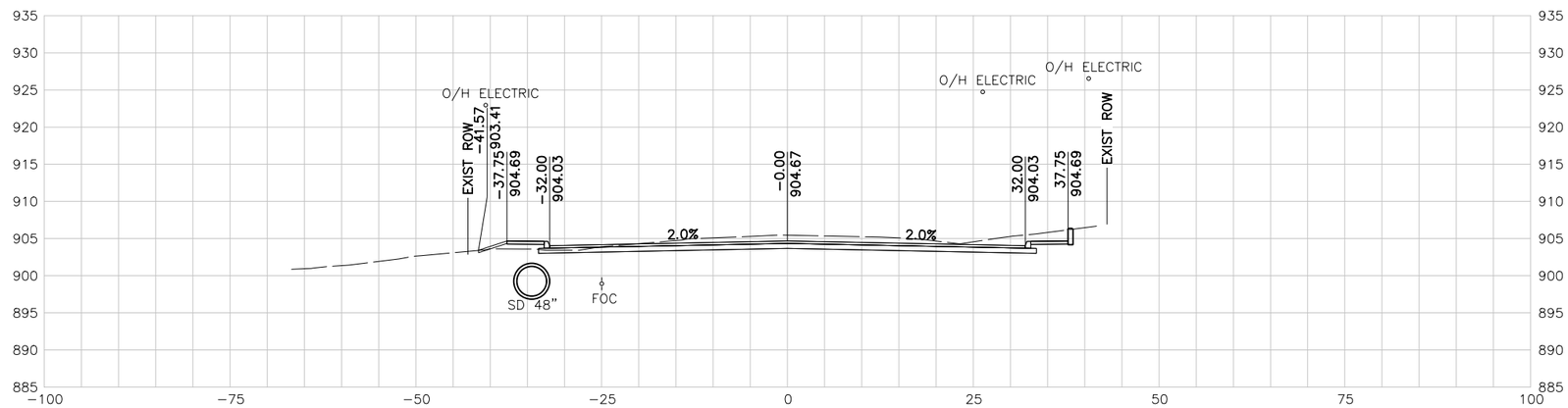

119+00.00 R1

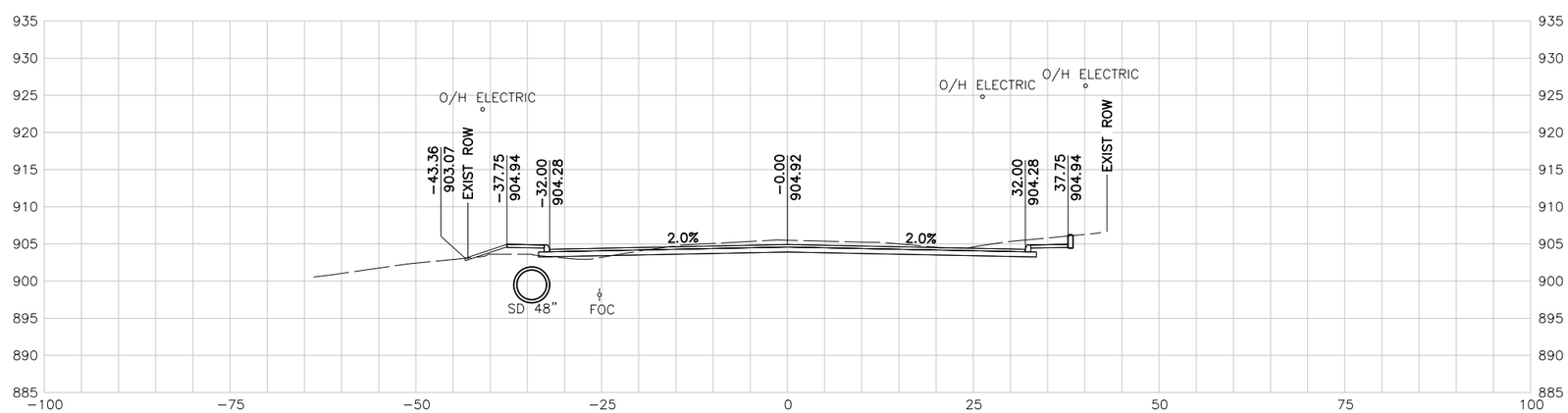

118+50.00 R1

10 5 0 10 20
SCALE FEET

NOTES:

1. UTILITY LOCATIONS ARE APPROXIMATE AND ARE SHOWN FROM THE BEST INFORMATION PROVIDED BY THE UTILITY COMPANIES AT THE TIME PLANS WERE PREPARED.
2. CONTRACTOR SHALL NOTIFY UTILITY COMPANIES AND LOCATE UTILITIES A MINIMUM OF 48 HOURS BEFORE BEGINNING WORK IN AREA.
3. CALL THE TEXAS STATE WIDE ONE CALL LOCATOR NUMBER 1-800-344-8377 48 HOURS BEFORE BEGINNING ANY EXCAVATION.

   DUE TO FEDERAL REGULATION TITLE 49, PART 192.181, CPS MUST MAINTAIN ACCESS TO GAS VALVES AT ALL TIMES. THE CONTRACTOR MUST PROTECT AND WORK AROUND ANY GAS VALVES THAT ARE IN THE PROJECT AREA.

   THE CONTRACTOR WILL BE RESPONSIBLE FOR PROTECTING ALL EXISTING UTILITIES ADJACENT TO THE WORK AREA.
4. SEE CROSS STREET PLAN AND PROFILE SHEETS AND INTERSECTION LAYOUT SHEETS FOR ADDITIONAL INFORMATION AT THE CROSS STREET.
5. SEE DRIVEWAY SUMMARY FOR ADDITIONAL INFORMATION PERTAINING TO DRIVEWAYS.

PRELIMINARY

90% SUBMITTAL
FOR INTERIM REVIEW ONLY
NOT FOR CONSTRUCTION, BIDDING, OR PERMIT PURPOSES.

CP&Y

ENGINEER JAIME AGUILAR
P.E. No. 87606 DATE 2/23/2017

BEXAR COUNTY
PUBLIC WORKS DEPARTMENT

NO	DATE	DESCRIPTION	DWG	CHK

REVISIONS

CP&Y
12500 SAN PEDRO AVENUE, SUITE 450
SAN ANTONIO, TEXAS 78216
TEL (210) 494-8004
FAX (210) 494-8286
T.B.P.E. FIRM # 1741

TALLEY ROAD

CROSS SECTIONS

SHEET 12 OF 88

PROJECT NUMBER:		SHEET NO.	
		560	
DESIGNED BY:	CP&Y	ROADWAY/HIGHWAY:	
CHECKED BY:	CP&Y	TALLEY ROAD	
DRAWN BY:	CP&Y	STATE	COUNTY
CHECKED BY:	CP&Y	TEXAS	BEXAR

cpybw_ANSIB.tbl
cpypdf_ANSIB.pltcfg
pw:/Active Projects/BEXA14048.01/8.00 Plans and Drawings/8.10 Base Files/14048RDxsec_90.dgn
2/23/2017 4:31:00 PM mberon
pw:/Active Projects/BEXA14048.01/8.00 Plans and Drawings/8.10 Base Files/14048RDxsec_90.dgn

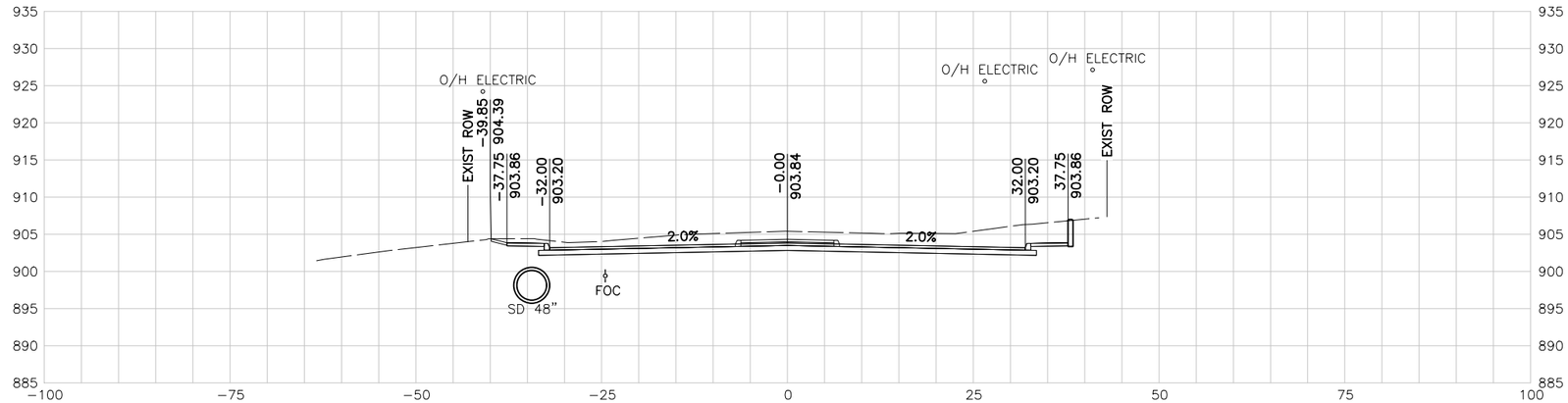

121+00.00 R1

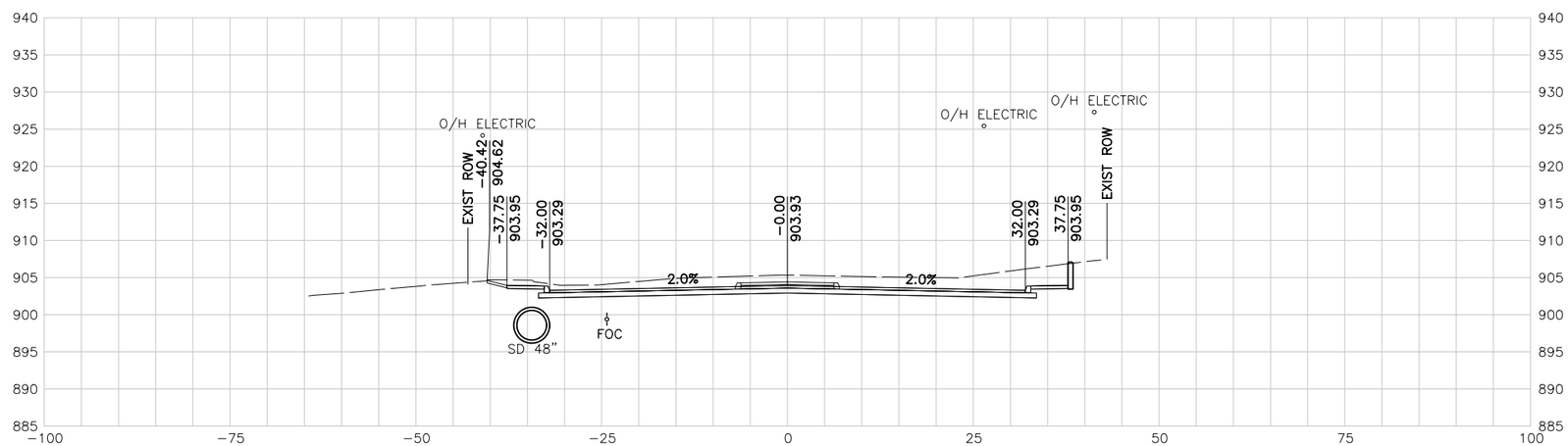

120+50.00 R1

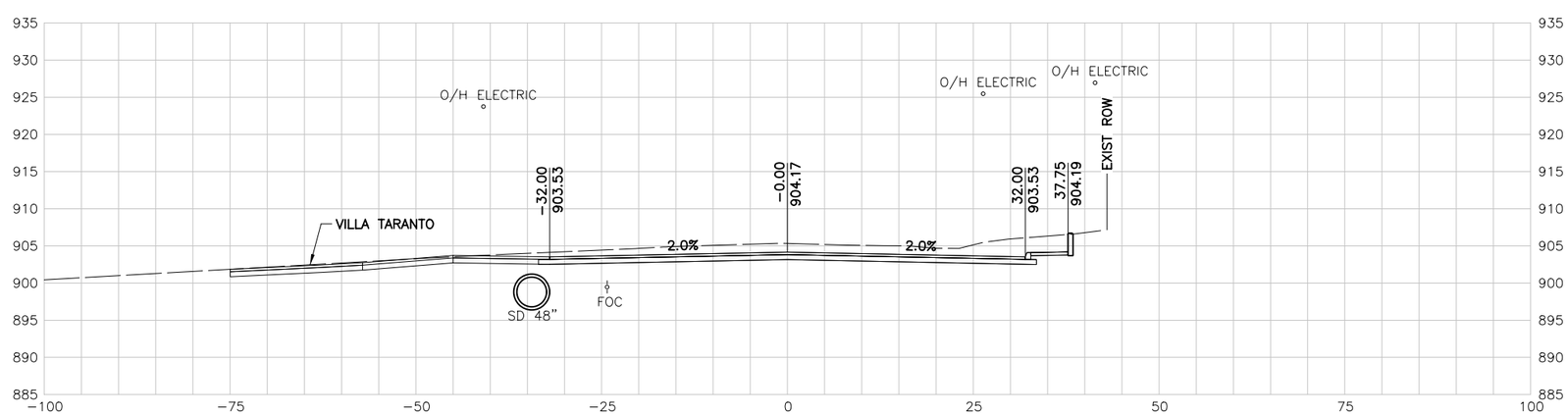

120+00.00 R1

10 5 0 10 20
SCALE FEET

NOTES:

1. UTILITY LOCATIONS ARE APPROXIMATE AND ARE SHOWN FROM THE BEST INFORMATION PROVIDED BY THE UTILITY COMPANIES AT THE TIME PLANS WERE PREPARED.
2. CONTRACTOR SHALL NOTIFY UTILITY COMPANIES AND LOCATE UTILITIES A MINIMUM OF 48 HOURS BEFORE BEGINNING WORK IN AREA.
3. CALL THE TEXAS STATE WIDE ONE CALL LOCATOR NUMBER 1-800-344-8377 48 HOURS BEFORE BEGINNING ANY EXCAVATION.

   DUE TO FEDERAL REGULATION TITLE 49, PART 192.181, CPS MUST MAINTAIN ACCESS TO GAS VALVES AT ALL TIMES. THE CONTRACTOR MUST PROTECT AND WORK AROUND ANY GAS VALVES THAT ARE IN THE PROJECT AREA.

   THE CONTRACTOR WILL BE RESPONSIBLE FOR PROTECTING ALL EXISTING UTILITIES ADJACENT TO THE WORK AREA.
4. SEE CROSS STREET PLAN AND PROFILE SHEETS AND INTERSECTION LAYOUT SHEETS FOR ADDITIONAL INFORMATION AT THE CROSS STREET.
5. SEE DRIVEWAY SUMMARY FOR ADDITIONAL INFORMATION PERTAINING TO DRIVEWAYS.

PRELIMINARY

90% SUBMITTAL
FOR INTERIM REVIEW ONLY
NOT FOR CONSTRUCTION, BIDDING, OR PERMIT PURPOSES.

CP&Y

ENGINEER JAIME AGUILAR
P.E. No. 87606 DATE 2/23/2017

BEXAR COUNTY
PUBLIC WORKS DEPARTMENT

NO	DATE	DESCRIPTION	DWG	CHK

REVISIONS

CP&Y
12500 SAN PEDRO AVENUE, SUITE 450
SAN ANTONIO, TEXAS 78216
TEL (210) 494-8004
FAX (210) 494-8286
T.B.P.E. FIRM # 1741

TALLEY ROAD

CROSS SECTIONS

SHEET 13 OF 88

PROJECT NUMBER:		SHEET NO.
		561
DESIGNED BY: CP&Y	ROADWAY/HIGHWAY:	
CHECKED BY: CP&Y	TALLEY ROAD	
DRAWN BY: CP&Y	STATE	COUNTY
CHECKED BY: CP&Y	TEXAS	BEXAR

2/23/2017 4:31:01 PM mberon
cpybw_ANSIB.tbl
cpypdf_ANSIB.pltcfg
pw:/Active Projects/BEXA14048.01/8.00 Plans and Drawings/8.10 Base Files/14048RDxsec_90.dgn
pw:/Active Projects/BEXA14048.01/8.00 Plans and Drawings/8.10 Base Files/14048RDxsec_90.dgn

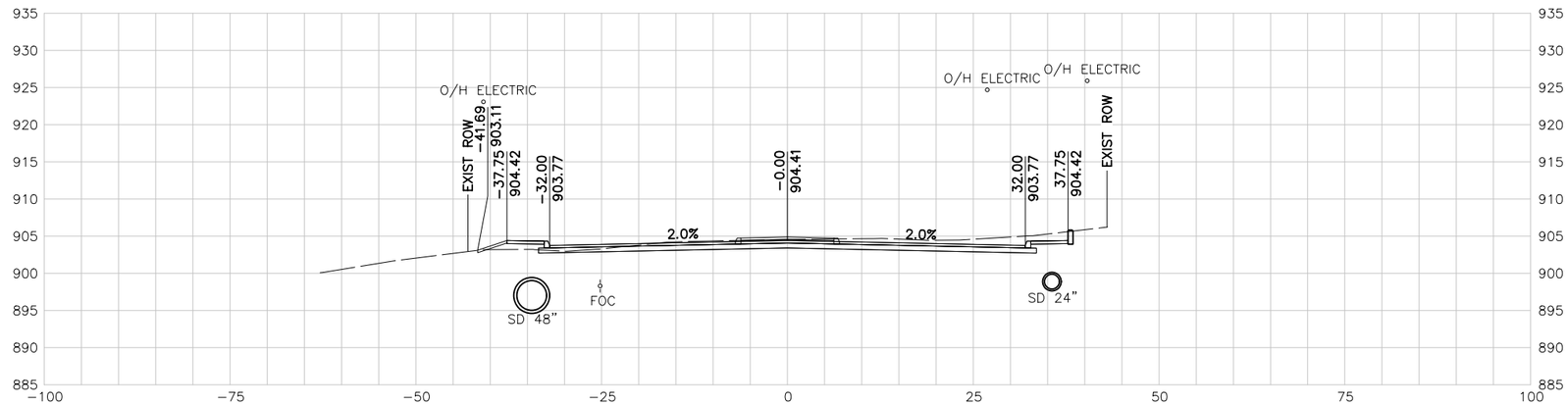

122+50.00 R1

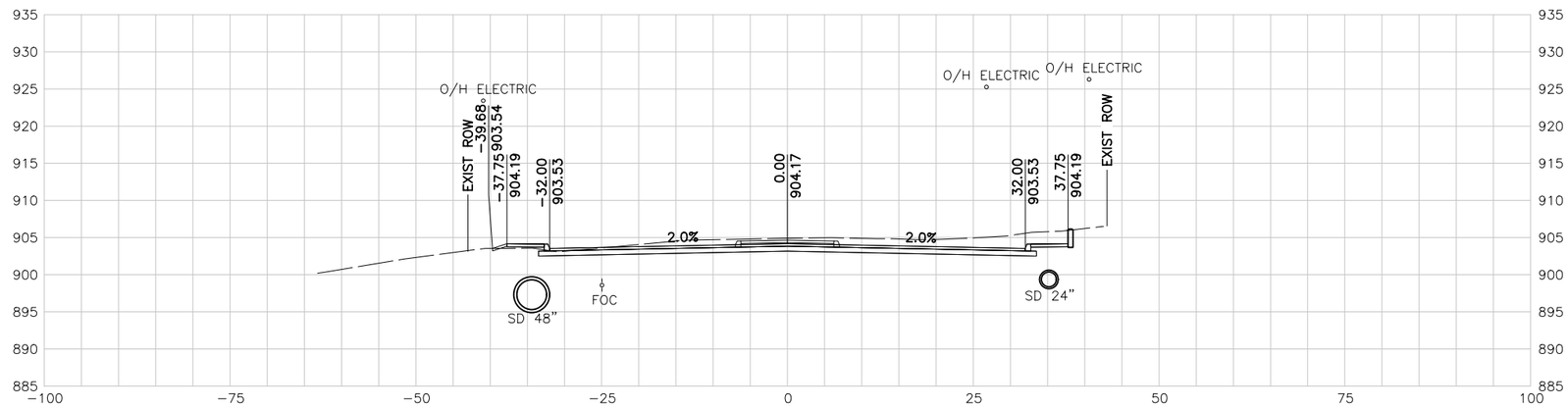

122+00.00 R1

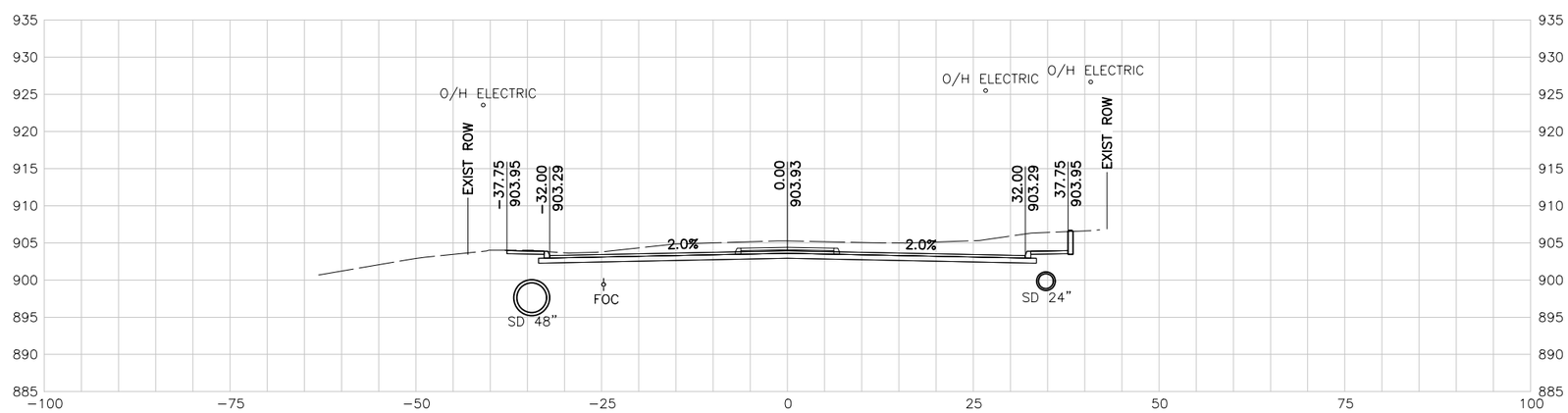

121+50.00 R1

10 5 0 10 20
SCALE FEET

NOTES:

1. UTILITY LOCATIONS ARE APPROXIMATE AND ARE SHOWN FROM THE BEST INFORMATION PROVIDED BY THE UTILITY COMPANIES AT THE TIME PLANS WERE PREPARED.
2. CONTRACTOR SHALL NOTIFY UTILITY COMPANIES AND LOCATE UTILITIES A MINIMUM OF 48 HOURS BEFORE BEGINNING WORK IN AREA.
3. CALL THE TEXAS STATE WIDE ONE CALL LOCATOR NUMBER 1-800-344-8377 48 HOURS BEFORE BEGINNING ANY EXCAVATION.

   DUE TO FEDERAL REGULATION TITLE 49, PART 192.181, CPS MUST MAINTAIN ACCESS TO GAS VALVES AT ALL TIMES. THE CONTRACTOR MUST PROTECT AND WORK AROUND ANY GAS VALVES THAT ARE IN THE PROJECT AREA.

   THE CONTRACTOR WILL BE RESPONSIBLE FOR PROTECTING ALL EXISTING UTILITIES ADJACENT TO THE WORK AREA.
4. SEE CROSS STREET PLAN AND PROFILE SHEETS AND INTERSECTION LAYOUT SHEETS FOR ADDITIONAL INFORMATION AT THE CROSS STREET.
5. SEE DRIVEWAY SUMMARY FOR ADDITIONAL INFORMATION PERTAINING TO DRIVEWAYS.

PRELIMINARY

90% SUBMITTAL
FOR INTERIM REVIEW ONLY
NOT FOR CONSTRUCTION, BIDDING, OR PERMIT PURPOSES.

CP&Y

ENGINEER JAIME AGUILAR
P.E. No. 87606 DATE 2/23/2017

BEXAR COUNTY
PUBLIC WORKS DEPARTMENT

NO	DATE	DESCRIPTION	DWG	CHK

REVISIONS

CP&Y
12500 SAN PEDRO AVENUE, SUITE 450
SAN ANTONIO, TEXAS 78216
TEL (210) 494-8004
FAX (210) 494-8286
T.B.P.E. FIRM # 1741

TALLEY ROAD

CROSS SECTIONS

SHEET 14 OF 88

PROJECT NUMBER:		SHEET NO.	
		562	
DESIGNED BY:	CP&Y	ROADWAY/HIGHWAY:	
CHECKED BY:	CP&Y	TALLEY ROAD	
DRAWN BY:	CP&Y	STATE	COUNTY
CHECKED BY:	CP&Y	TEXAS	BEXAR

cpybw_ANSIB.tbl
cpycf_ANSIB.pltcfg
pw:/Active Projects/BEXA14048.01/8.00 Plans and Drawings/8.10 Base Files/14048RDxsec_90.dgn
2/23/2017 4:31:01 PM mberan
pw:/Active Projects/BEXA14048.01/8.00 Plans and Drawings/8.10 Base Files/14048RDxsec_90.dgn

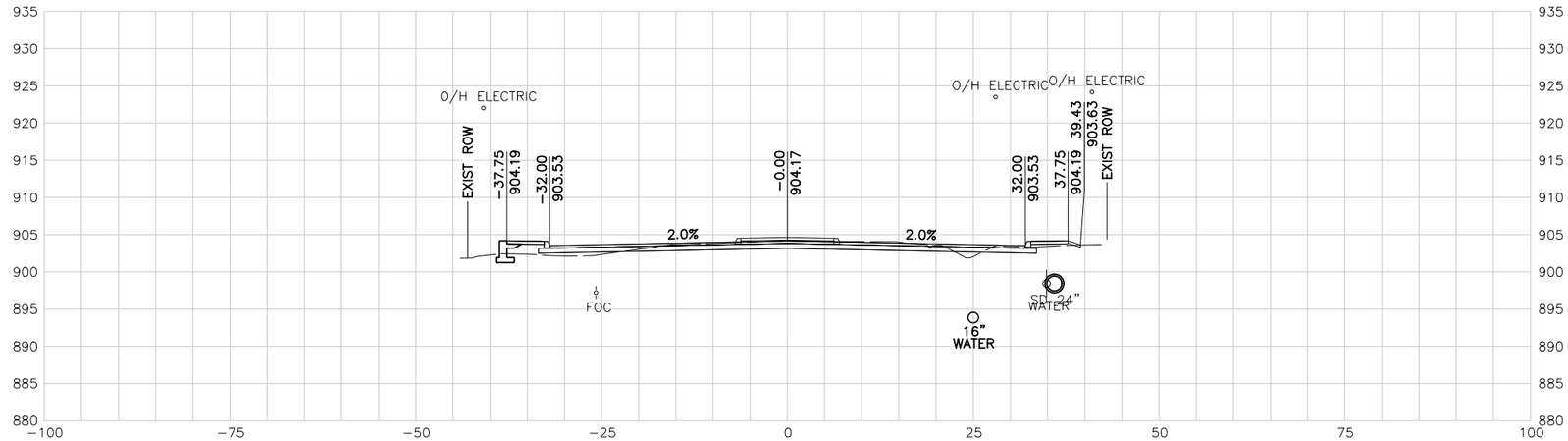

124+00.00 R1

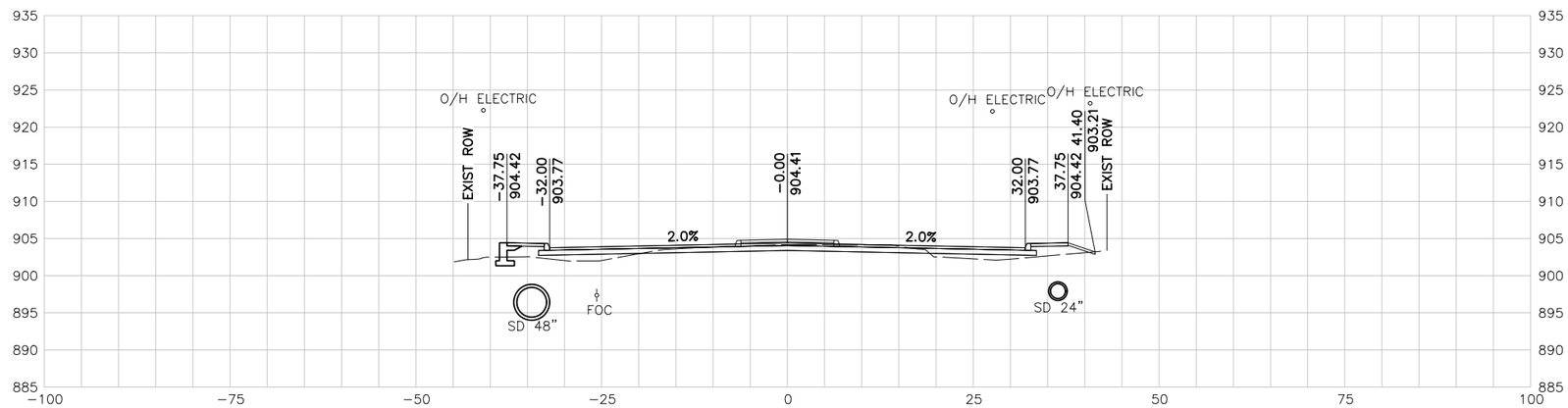

123+50.00 R1

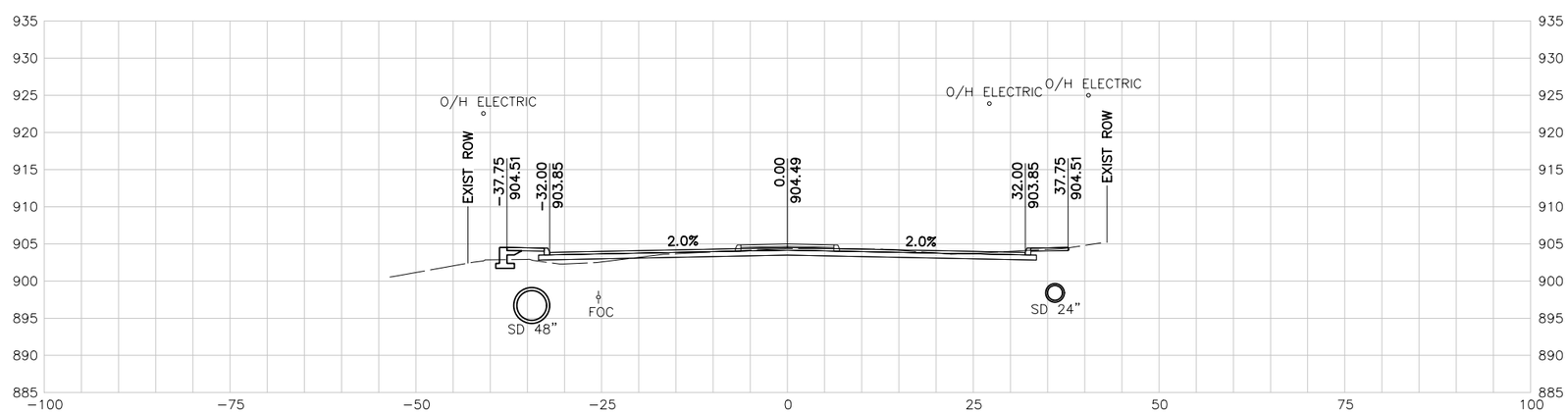

123+00.00 R1

10 5 0 10 20
SCALE FEET

NOTES:

1. UTILITY LOCATIONS ARE APPROXIMATE AND ARE SHOWN FROM THE BEST INFORMATION PROVIDED BY THE UTILITY COMPANIES AT THE TIME PLANS WERE PREPARED.
2. CONTRACTOR SHALL NOTIFY UTILITY COMPANIES AND LOCATE UTILITIES A MINIMUM OF 48 HOURS BEFORE BEGINNING WORK IN AREA.
3. CALL THE TEXAS STATE WIDE ONE CALL LOCATOR NUMBER 1-800-344-8377 48 HOURS BEFORE BEGINNING ANY EXCAVATION.

   DUE TO FEDERAL REGULATION TITLE 49, PART 192.181, CPS MUST MAINTAIN ACCESS TO GAS VALVES AT ALL TIMES. THE CONTRACTOR MUST PROTECT AND WORK AROUND ANY GAS VALVES THAT ARE IN THE PROJECT AREA.

   THE CONTRACTOR WILL BE RESPONSIBLE FOR PROTECTING ALL EXISTING UTILITIES ADJACENT TO THE WORK AREA.
4. SEE CROSS STREET PLAN AND PROFILE SHEETS AND INTERSECTION LAYOUT SHEETS FOR ADDITIONAL INFORMATION AT THE CROSS STREET.
5. SEE DRIVEWAY SUMMARY FOR ADDITIONAL INFORMATION PERTAINING TO DRIVEWAYS.

PRELIMINARY

90% SUBMITTAL
FOR INTERIM REVIEW ONLY
NOT FOR CONSTRUCTION, BIDDING, OR PERMIT PURPOSES.

CP&Y

ENGINEER JAIME AGUILAR
P.E. No. 87606 DATE 2/23/2017

BEXAR COUNTY
PUBLIC WORKS DEPARTMENT

NO	DATE	DESCRIPTION	DWG	CHK

REVISIONS

CP&Y
12500 SAN PEDRO AVENUE, SUITE 450
SAN ANTONIO, TEXAS 78216
TEL (210) 494-8004
FAX (210) 494-8286
T.B.P.E. FIRM # 1741

TALLEY ROAD

CROSS SECTIONS

SHEET 15 OF 88

PROJECT NUMBER:		SHEET NO.	
		563	
DESIGNED BY:	CP&Y	ROADWAY/HIGHWAY:	
CHECKED BY:	CP&Y	TALLEY ROAD	
DRAWN BY:	CP&Y	STATE	COUNTY
CHECKED BY:	CP&Y	TEXAS	BEXAR

cpybw_ANSIB.tbl
cpypdf_ANSIB.pltcfg
pw:/Active Projects/BEXA14048.01/8.00 Plans and Drawings/8.10 Base Files/14048RDxsec_90.dgn
2/23/2017 4:31:02 PM mberon
pw:/Active Projects/BEXA14048.01/8.00 Plans and Drawings/8.10 Base Files/14048RDxsec_90.dgn

10 5 0 10 20
SCALE FEET

NOTES:

1. UTILITY LOCATIONS ARE APPROXIMATE AND ARE SHOWN FROM THE BEST INFORMATION PROVIDED BY THE UTILITY COMPANIES AT THE TIME PLANS WERE PREPARED.
2. CONTRACTOR SHALL NOTIFY UTILITY COMPANIES AND LOCATE UTILITIES A MINIMUM OF 48 HOURS BEFORE BEGINNING WORK IN AREA.
3. CALL THE TEXAS STATE WIDE ONE CALL LOCATOR NUMBER 1-800-344-8377 48 HOURS BEFORE BEGINNING ANY EXCAVATION.

   DUE TO FEDERAL REGULATION TITLE 49, PART 192.181, CPS MUST MAINTAIN ACCESS TO GAS VALVES AT ALL TIMES. THE CONTRACTOR MUST PROTECT AND WORK AROUND ANY GAS VALVES THAT ARE IN THE PROJECT AREA.

   THE CONTRACTOR WILL BE RESPONSIBLE FOR PROTECTING ALL EXISTING UTILITIES ADJACENT TO THE WORK AREA.
4. SEE CROSS STREET PLAN AND PROFILE SHEETS AND INTERSECTION LAYOUT SHEETS FOR ADDITIONAL INFORMATION AT THE CROSS STREET.
5. SEE DRIVEWAY SUMMARY FOR ADDITIONAL INFORMATION PERTAINING TO DRIVEWAYS.

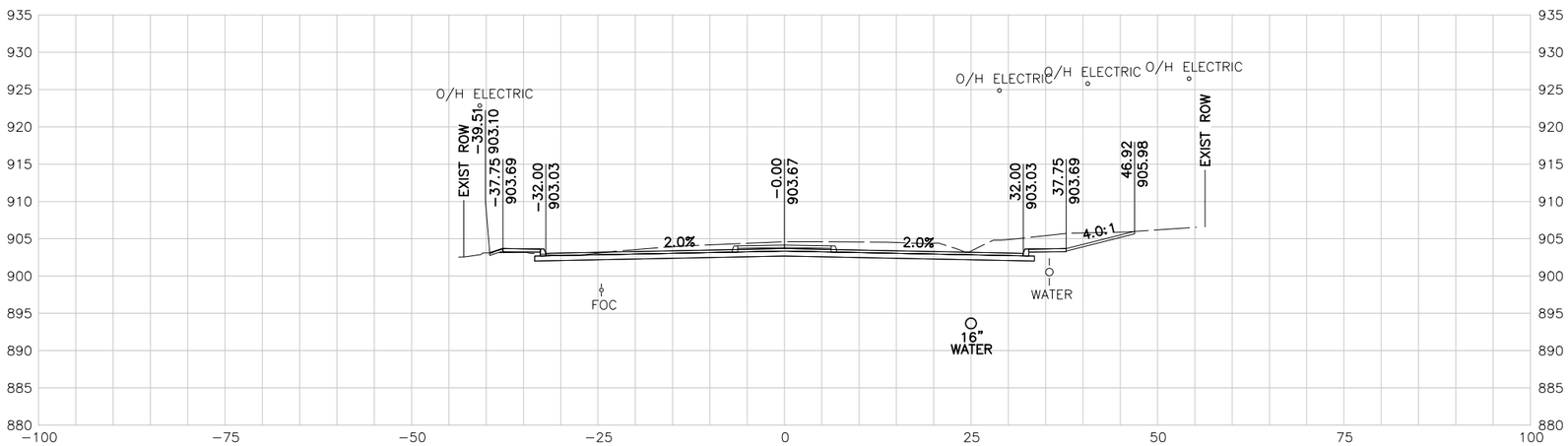

125+00.00 R1

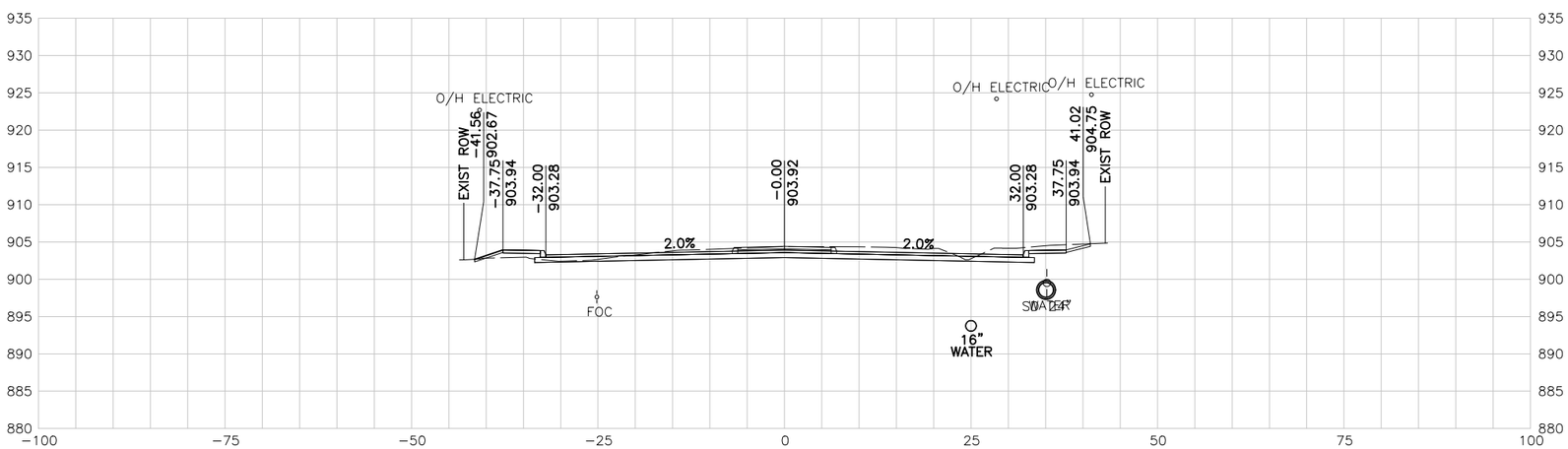

124+50.00 R1

PRELIMINARY

90% SUBMITTAL
FOR INTERIM REVIEW ONLY
NOT FOR CONSTRUCTION, BIDDING, OR PERMIT PURPOSES.

CP&Y

ENGINEER JAIME AGUILAR
P.E. No. 87606 DATE 2/23/2017

BEXAR COUNTY
PUBLIC WORKS DEPARTMENT

NO	DATE	DESCRIPTION	DWG	CHK

REVISIONS

CP&Y
12500 SAN PEDRO AVENUE, SUITE 450
SAN ANTONIO, TEXAS 78216
TEL (210) 494-8004
FAX (210) 494-8286
T.B.P.E. FIRM # 1741

TALLEY ROAD

CROSS SECTIONS

SHEET 16 OF 88

PROJECT NUMBER:		SHEET NO.	
		564	
DESIGNED BY:	CP&Y	ROADWAY/HIGHWAY:	
CHECKED BY:	CP&Y	TALLEY ROAD	
DRAWN BY:	CP&Y	STATE	COUNTY
CHECKED BY:	CP&Y	TEXAS	BEXAR

cpybw_ANSIB.tbl
cpypdf_ANSIB.pltcfg
pw:/Active Projects/BEXA14048.01/8.00 Plans and Drawings/8.10 Base Files/14048RDxsec_90.dgn
2/23/2017 4:31:03 PM mberon
pw:/Active Projects/BEXA14048.01/8.00 Plans and Drawings/8.10 Base Files/14048RDxsec_90.dgn

10 5 0 10 20
SCALE FEET

NOTES:

1. UTILITY LOCATIONS ARE APPROXIMATE AND ARE SHOWN FROM THE BEST INFORMATION PROVIDED BY THE UTILITY COMPANIES AT THE TIME PLANS WERE PREPARED.
2. CONTRACTOR SHALL NOTIFY UTILITY COMPANIES AND LOCATE UTILITIES A MINIMUM OF 48 HOURS BEFORE BEGINNING WORK IN AREA.
3. CALL THE TEXAS STATE WIDE ONE CALL LOCATOR NUMBER 1-800-344-8377 48 HOURS BEFORE BEGINNING ANY EXCAVATION.

   DUE TO FEDERAL REGULATION TITLE 49, PART 192.181, CPS MUST MAINTAIN ACCESS TO GAS VALVES AT ALL TIMES. THE CONTRACTOR MUST PROTECT AND WORK AROUND ANY GAS VALVES THAT ARE IN THE PROJECT AREA.

   THE CONTRACTOR WILL BE RESPONSIBLE FOR PROTECTING ALL EXISTING UTILITIES ADJACENT TO THE WORK AREA.
4. SEE CROSS STREET PLAN AND PROFILE SHEETS AND INTERSECTION LAYOUT SHEETS FOR ADDITIONAL INFORMATION AT THE CROSS STREET.
5. SEE DRIVEWAY SUMMARY FOR ADDITIONAL INFORMATION PERTAINING TO DRIVEWAYS.

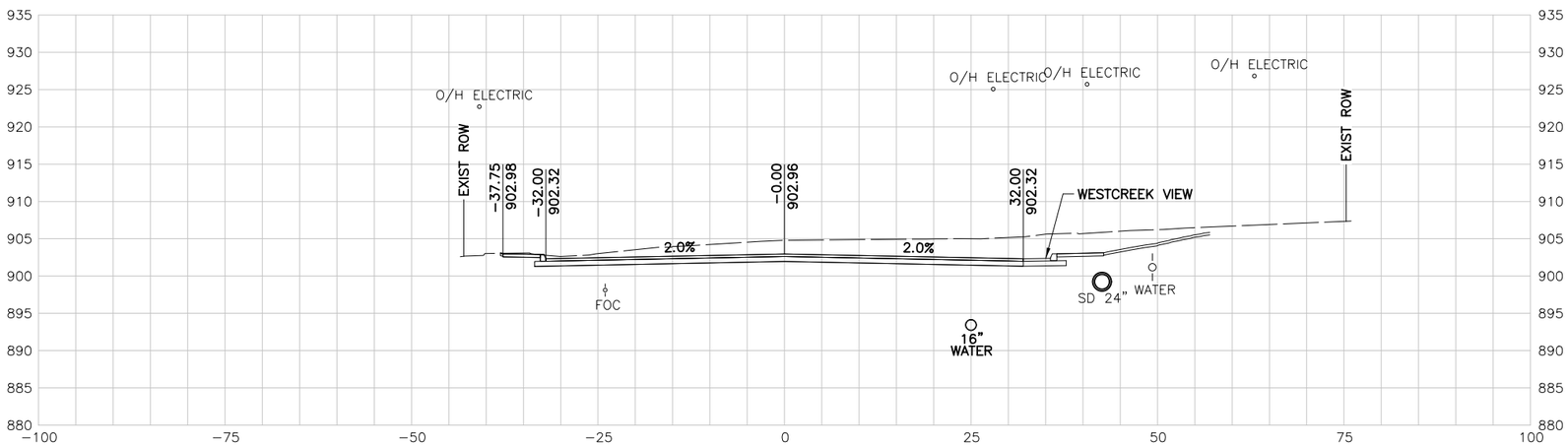

126+00.00 R1

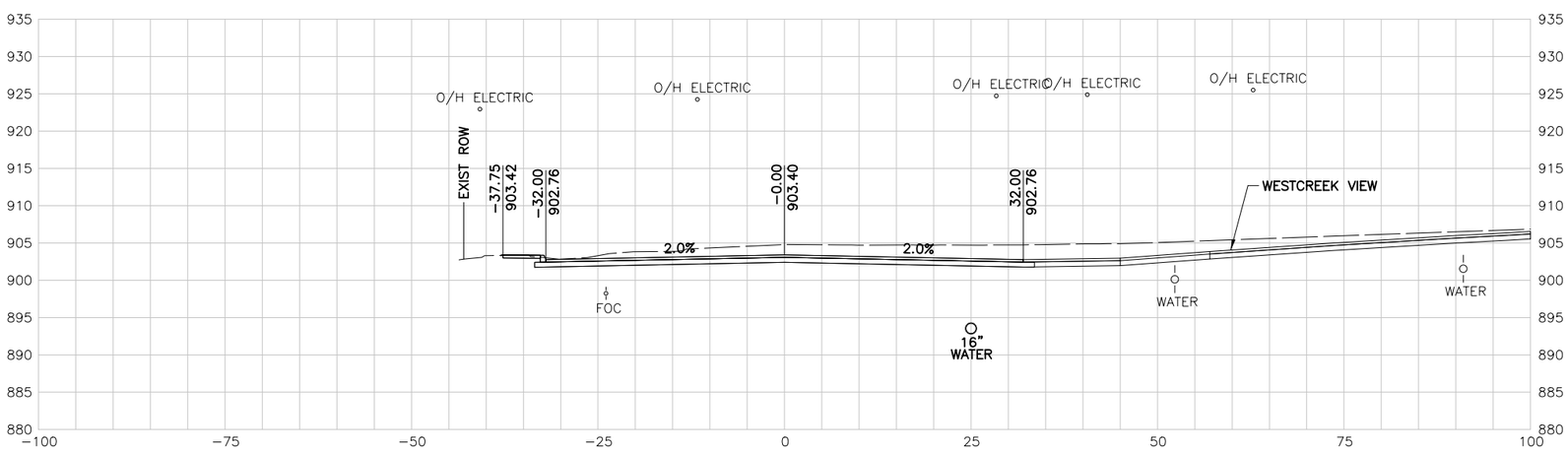

125+50.00 R1

PRELIMINARY

90% SUBMITTAL
FOR INTERIM REVIEW ONLY
NOT FOR CONSTRUCTION, BIDDING, OR PERMIT PURPOSES.

CP&Y

ENGINEER JAIME AGUILAR
P.E. No. 87606 DATE 2/23/2017

BEXAR COUNTY
PUBLIC WORKS DEPARTMENT

NO	DATE	DESCRIPTION	DWG	CHK

REVISIONS

CP&Y
12500 SAN PEDRO AVENUE, SUITE 450
SAN ANTONIO, TEXAS 78216
TEL (210) 494-8004
FAX (210) 494-8286
T.B.P.E. FIRM # 1741

TALLEY ROAD

CROSS SECTIONS

SHEET 17 OF 88

PROJECT NUMBER:		SHEET NO.	
		565	
DESIGNED BY:	CP&Y	ROADWAY/HIGHWAY:	
CHECKED BY:	CP&Y	TALLEY ROAD	
DRAWN BY:	CP&Y	STATE	COUNTY
CHECKED BY:	CP&Y	TEXAS	BEXAR

cpybw_ANSIB.tbl
cpypdf_ANSIB.pltcfg
pw:/Active Projects/BEXA14048.01/8.00 Plans and Drawings/8.10 Base Files/14048RDxsec_90.dgn
2/23/2017 4:31:03 PM mberon
pw:/Active Projects/BEXA14048.01/8.00 Plans and Drawings/8.10 Base Files/14048RDxsec_90.dgn

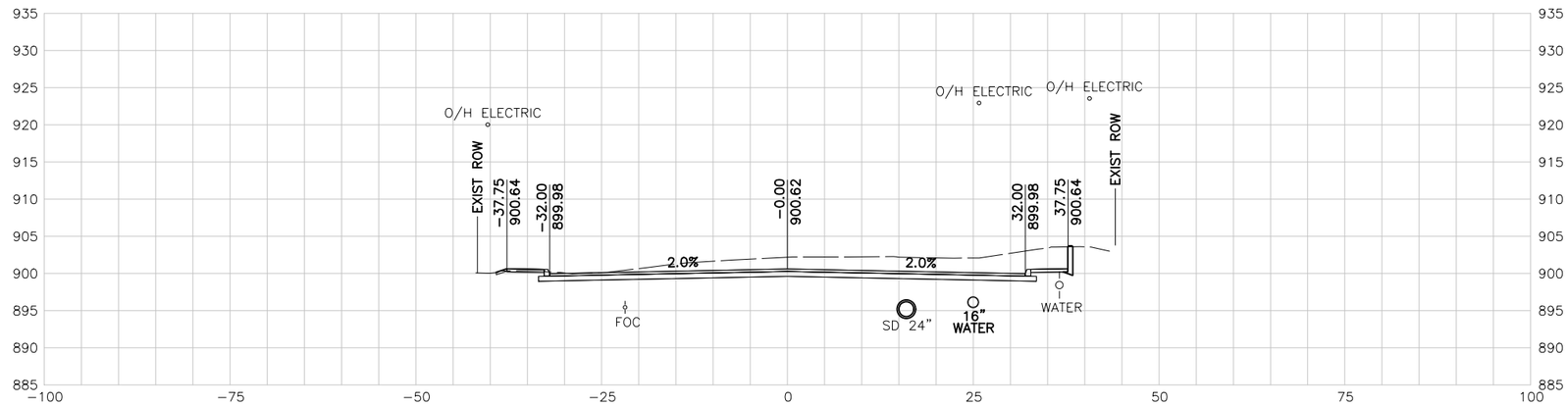

127+50.00 R1

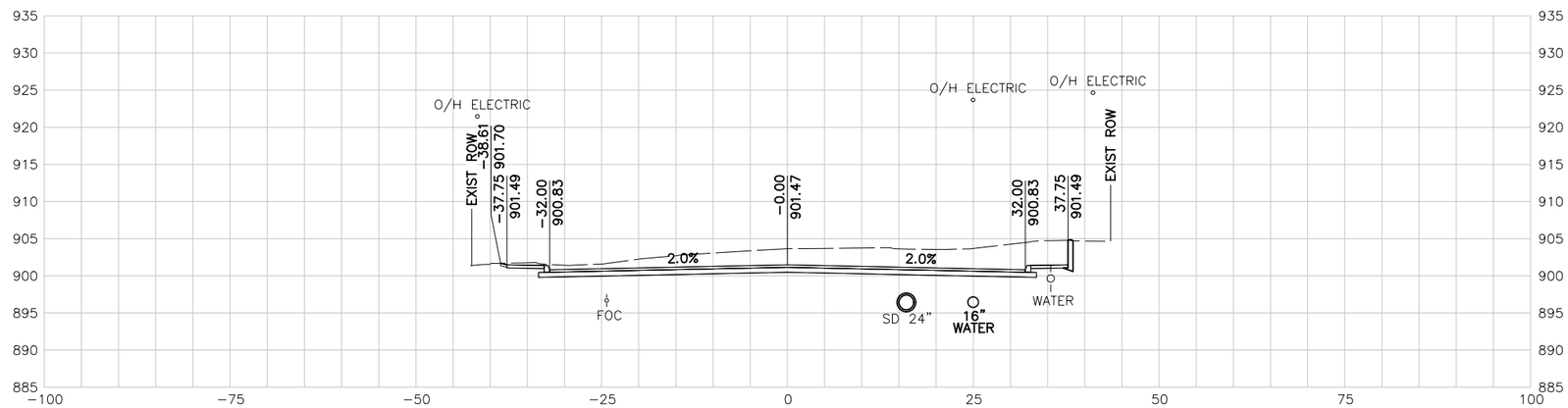

127+00.00 R1

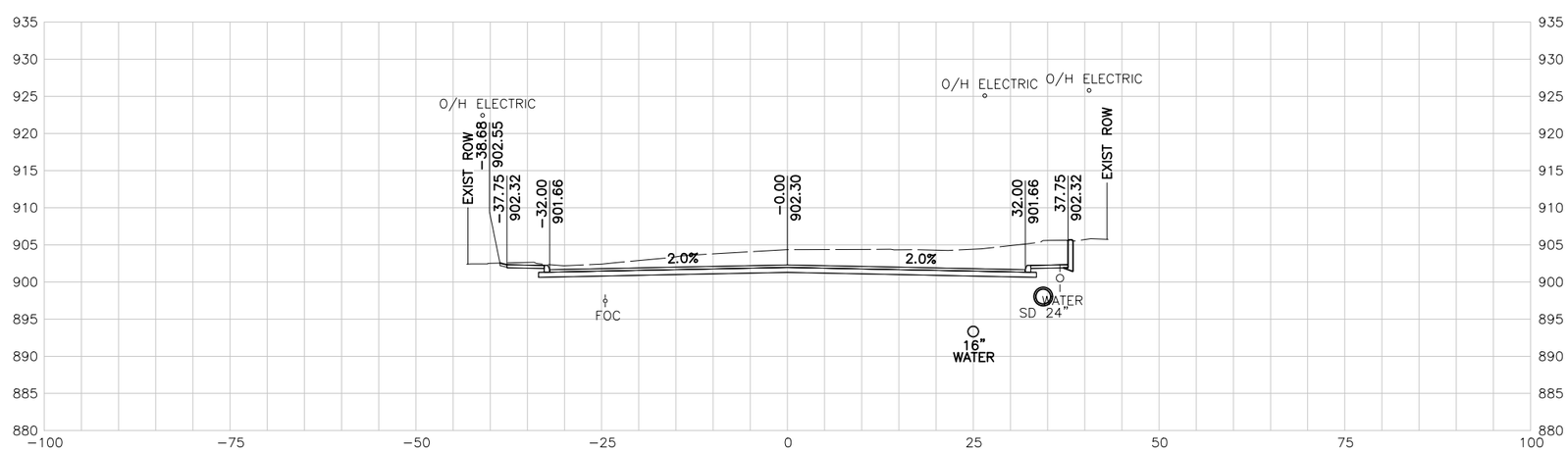

126+50.00 R1

10 5 0 10 20
SCALE FEET

NOTES:

1. UTILITY LOCATIONS ARE APPROXIMATE AND ARE SHOWN FROM THE BEST INFORMATION PROVIDED BY THE UTILITY COMPANIES AT THE TIME PLANS WERE PREPARED.
2. CONTRACTOR SHALL NOTIFY UTILITY COMPANIES AND LOCATE UTILITIES A MINIMUM OF 48 HOURS BEFORE BEGINNING WORK IN AREA.
3. CALL THE TEXAS STATE WIDE ONE CALL LOCATOR NUMBER 1-800-344-8377 48 HOURS BEFORE BEGINNING ANY EXCAVATION.

   DUE TO FEDERAL REGULATION TITLE 49, PART 192.181, CPS MUST MAINTAIN ACCESS TO GAS VALVES AT ALL TIMES. THE CONTRACTOR MUST PROTECT AND WORK AROUND ANY GAS VALVES THAT ARE IN THE PROJECT AREA.

   THE CONTRACTOR WILL BE RESPONSIBLE FOR PROTECTING ALL EXISTING UTILITIES ADJACENT TO THE WORK AREA.
4. SEE CROSS STREET PLAN AND PROFILE SHEETS AND INTERSECTION LAYOUT SHEETS FOR ADDITIONAL INFORMATION AT THE CROSS STREET.
5. SEE DRIVEWAY SUMMARY FOR ADDITIONAL INFORMATION PERTAINING TO DRIVEWAYS.

PRELIMINARY

90% SUBMITTAL
FOR INTERIM REVIEW ONLY
NOT FOR CONSTRUCTION, BIDDING, OR PERMIT PURPOSES.

CP&Y

ENGINEER JAIME AGUILAR
P.E. No. 87606 DATE 2/23/2017

BEXAR COUNTY
PUBLIC WORKS DEPARTMENT

NO	DATE	DESCRIPTION	DWG	CHK

REVISIONS

CP&Y
12500 SAN PEDRO AVENUE, SUITE 450
SAN ANTONIO, TEXAS 78216
TEL (210) 494-8004
FAX (210) 494-8286
T.B.P.E. FIRM # 1741

TALLEY ROAD

CROSS SECTIONS

SHEET 18 OF 88

PROJECT NUMBER:		SHEET NO.	
		566	
DESIGNED BY:	CP&Y	ROADWAY/HIGHWAY:	
CHECKED BY:	CP&Y	TALLEY ROAD	
DRAWN BY:	CP&Y	STATE	COUNTY
CHECKED BY:	CP&Y	TEXAS	BEXAR

cpybw_ANSIB.tbl
cpypdf_ANSIB.pltcfg
pw:/Active Projects/BEXA14048.01/8.00 Plans and Drawings/8.10 Base Files/14048RDxsec_90.dgn
2/23/2017 4:31:04 PM mberon
pw:/Active Projects/BEXA14048.01/8.00 Plans and Drawings/8.10 Base Files/14048RDxsec_90.dgn

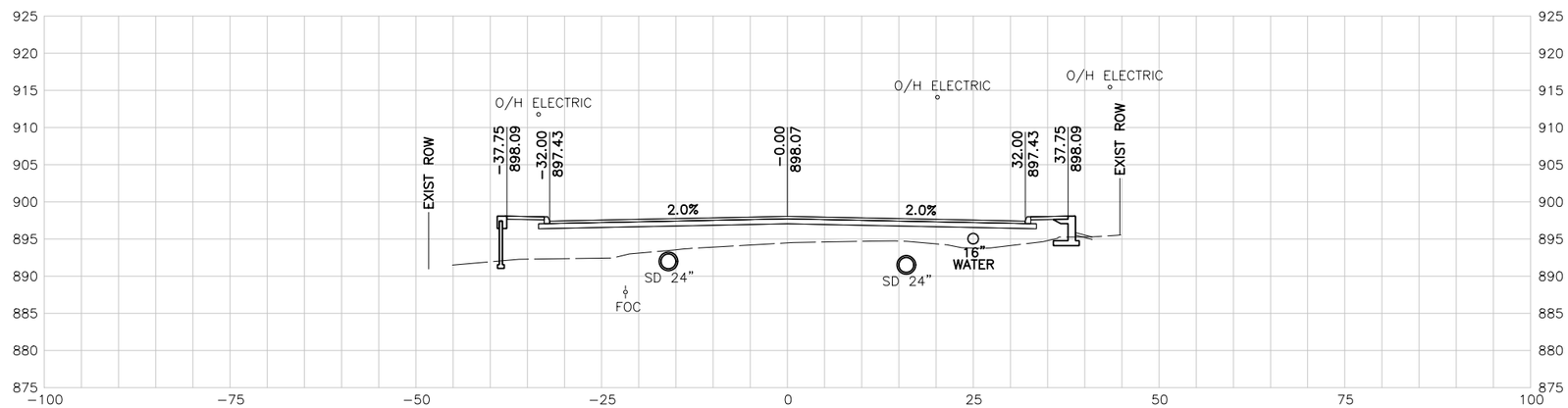

129+00.00 R1

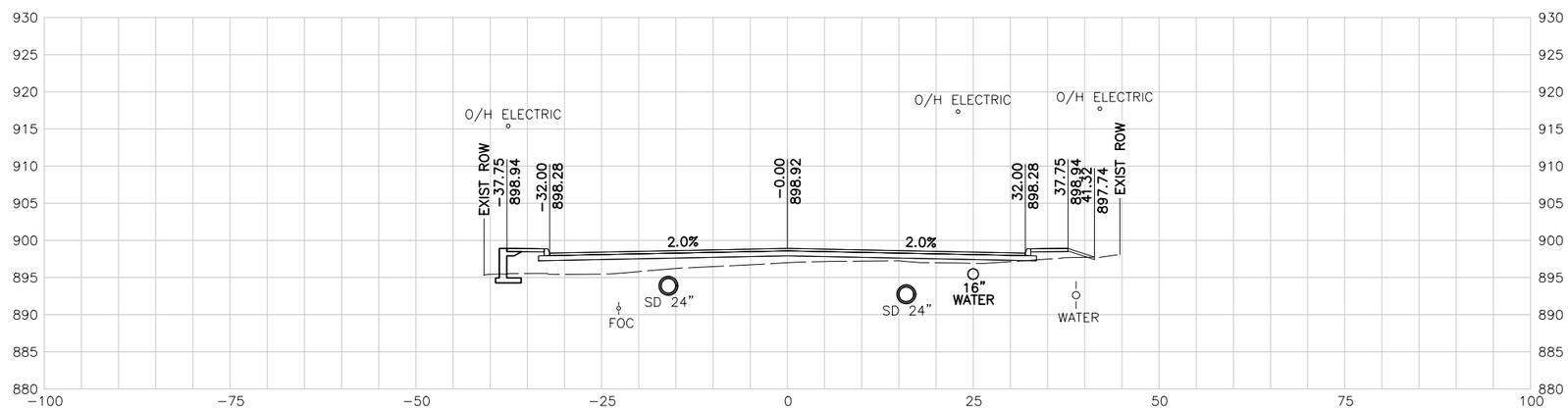

128+50.00 R1

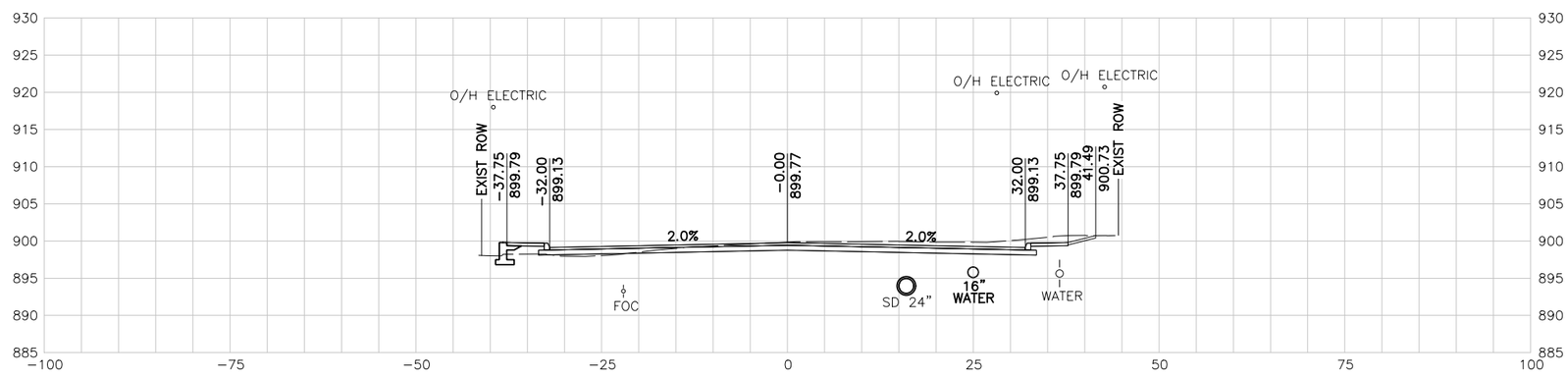

128+00.00 R1

10 5 0 10 20
SCALE FEET

NOTES:

1. UTILITY LOCATIONS ARE APPROXIMATE AND ARE SHOWN FROM THE BEST INFORMATION PROVIDED BY THE UTILITY COMPANIES AT THE TIME PLANS WERE PREPARED.
2. CONTRACTOR SHALL NOTIFY UTILITY COMPANIES AND LOCATE UTILITIES A MINIMUM OF 48 HOURS BEFORE BEGINNING WORK IN AREA.
3. CALL THE TEXAS STATE WIDE ONE CALL LOCATOR NUMBER 1-800-344-8377 48 HOURS BEFORE BEGINNING ANY EXCAVATION.

   DUE TO FEDERAL REGULATION TITLE 49, PART 192.181, CPS MUST MAINTAIN ACCESS TO GAS VALVES AT ALL TIMES. THE CONTRACTOR MUST PROTECT AND WORK AROUND ANY GAS VALVES THAT ARE IN THE PROJECT AREA.

   THE CONTRACTOR WILL BE RESPONSIBLE FOR PROTECTING ALL EXISTING UTILITIES ADJACENT TO THE WORK AREA.
4. SEE CROSS STREET PLAN AND PROFILE SHEETS AND INTERSECTION LAYOUT SHEETS FOR ADDITIONAL INFORMATION AT THE CROSS STREET.
5. SEE DRIVEWAY SUMMARY FOR ADDITIONAL INFORMATION PERTAINING TO DRIVEWAYS.

PRELIMINARY

90% SUBMITTAL
FOR INTERIM REVIEW ONLY
NOT FOR CONSTRUCTION, BIDDING, OR PERMIT PURPOSES.

CP&Y

ENGINEER JAIME AGUILAR
P.E. No. 87606 DATE 2/23/2017

BEXAR COUNTY
PUBLIC WORKS DEPARTMENT

NO	DATE	DESCRIPTION	DWG	CHK

REVISIONS

CP&Y
12500 SAN PEDRO AVENUE, SUITE 450
SAN ANTONIO, TEXAS 78216
TEL (210) 494-8004
FAX (210) 494-8286
T.B.P.E. FIRM # 1741

TALLEY ROAD

CROSS SECTIONS

SHEET 19 OF 88

PROJECT NUMBER:		SHEET NO.	
		567	
DESIGNED BY:	CP&Y	ROADWAY/HIGHWAY:	
CHECKED BY:	CP&Y	TALLEY ROAD	
DRAWN BY:	CP&Y	STATE	COUNTY
CHECKED BY:	CP&Y	TEXAS	BEXAR

cpybw_ANSIB.tbl
cpypdf_ANSIB.pltcfg
pw:/Active Projects/BEXA14048.01/8.00 Plans and Drawings/8.10 Base Files/14048RDxsec_90.dgn
2/23/2017 4:31:04 PM mberan
pw:/Active Projects/BEXA14048.01/8.00 Plans and Drawings/8.10 Base Files/14048RDxsec_90.dgn

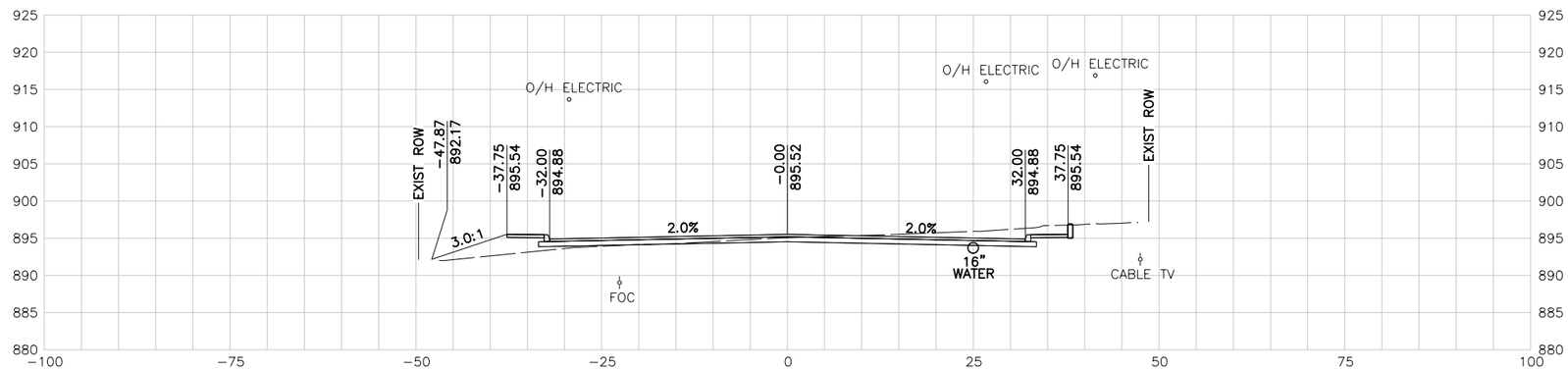

130+50.00 R1

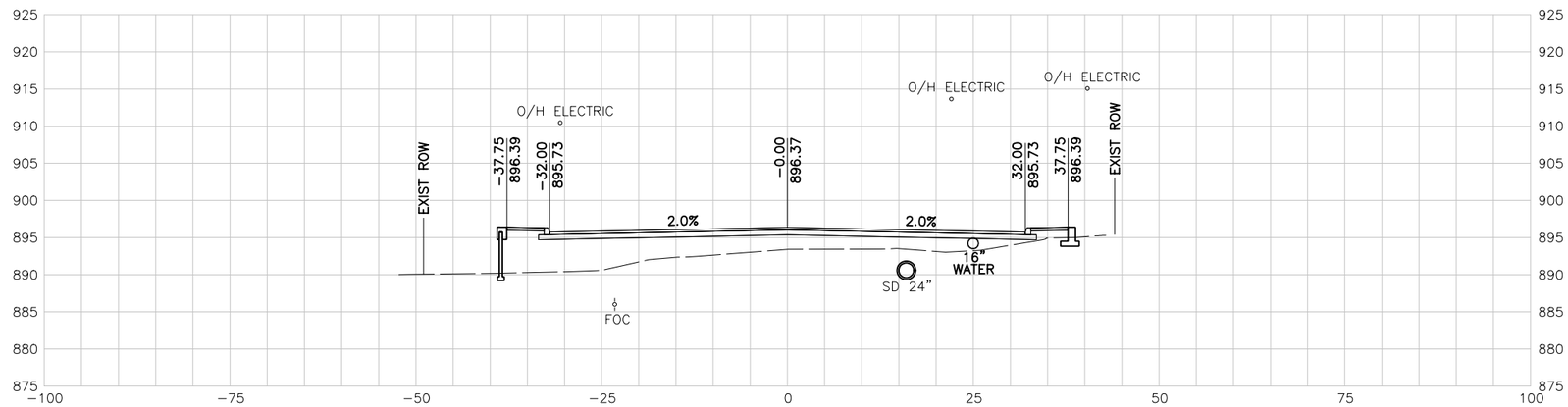

130+00.00 R1

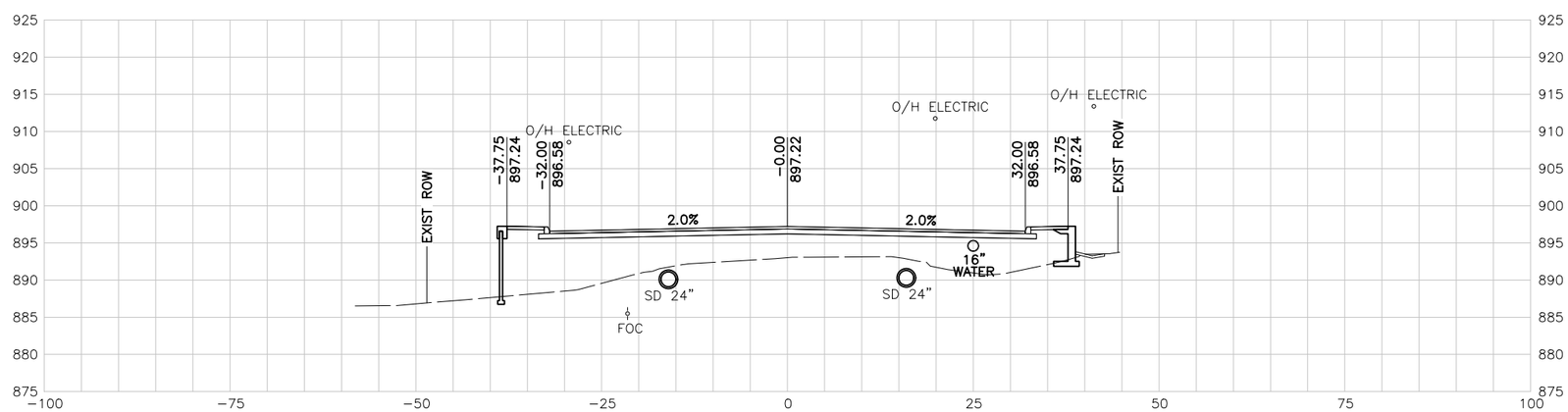

129+50.00 R1

10 5 0 10 20
SCALE FEET

NOTES:

1. UTILITY LOCATIONS ARE APPROXIMATE AND ARE SHOWN FROM THE BEST INFORMATION PROVIDED BY THE UTILITY COMPANIES AT THE TIME PLANS WERE PREPARED.
2. CONTRACTOR SHALL NOTIFY UTILITY COMPANIES AND LOCATE UTILITIES A MINIMUM OF 48 HOURS BEFORE BEGINNING WORK IN AREA.
3. CALL THE TEXAS STATE WIDE ONE CALL LOCATOR NUMBER 1-800-344-8377 48 HOURS BEFORE BEGINNING ANY EXCAVATION.

   DUE TO FEDERAL REGULATION TITLE 49, PART 192.181, CPS MUST MAINTAIN ACCESS TO GAS VALVES AT ALL TIMES. THE CONTRACTOR MUST PROTECT AND WORK AROUND ANY GAS VALVES THAT ARE IN THE PROJECT AREA.

   THE CONTRACTOR WILL BE RESPONSIBLE FOR PROTECTING ALL EXISTING UTILITIES ADJACENT TO THE WORK AREA.
4. SEE CROSS STREET PLAN AND PROFILE SHEETS AND INTERSECTION LAYOUT SHEETS FOR ADDITIONAL INFORMATION AT THE CROSS STREET.
5. SEE DRIVEWAY SUMMARY FOR ADDITIONAL INFORMATION PERTAINING TO DRIVEWAYS.

PRELIMINARY

90% SUBMITTAL
FOR INTERIM REVIEW ONLY
NOT FOR CONSTRUCTION, BIDDING, OR PERMIT PURPOSES.

CP&Y

ENGINEER JAIME AGUILAR
P.E. No. 87606 DATE 2/23/2017

BEXAR COUNTY
PUBLIC WORKS DEPARTMENT

NO	DATE	DESCRIPTION	DWG	CHK

REVISIONS

CP&Y
12500 SAN PEDRO AVENUE, SUITE 450
SAN ANTONIO, TEXAS 78216
TEL (210) 494-8004
FAX (210) 494-8286
T.B.P.E. FIRM # 1741

TALLEY ROAD

CROSS SECTIONS

SHEET 20 OF 88

PROJECT NUMBER:		SHEET NO.	
		568	
DESIGNED BY:	CP&Y	ROADWAY/HIGHWAY:	
CHECKED BY:	CP&Y	TALLEY ROAD	
DRAWN BY:	CP&Y	STATE	COUNTY
CHECKED BY:	CP&Y	TEXAS	BEXAR

cpybw_ANSIB.tbl
cpypdf_ANSIB.pltcfg
pw:/Active Projects/BEXA14048.01/8.00 Plans and Drawings/8.10 Base Files/14048RDxsec_90.dgn
2/23/2017 4:31:05 PM mberon
pw:/Active Projects/BEXA14048.01/8.00 Plans and Drawings/8.10 Base Files/14048RDxsec_90.dgn

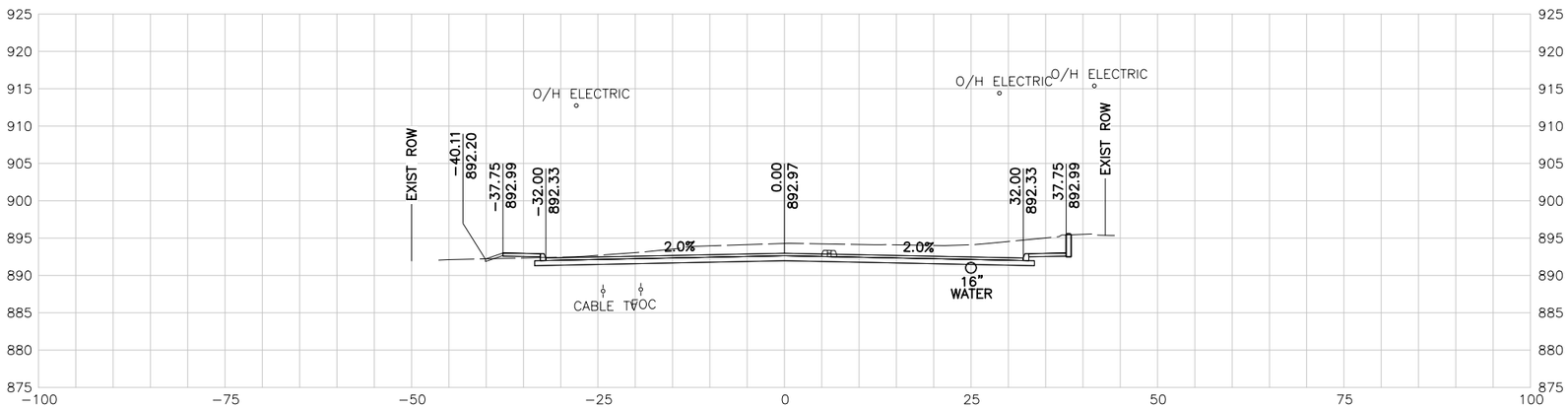

132+00.00 R1

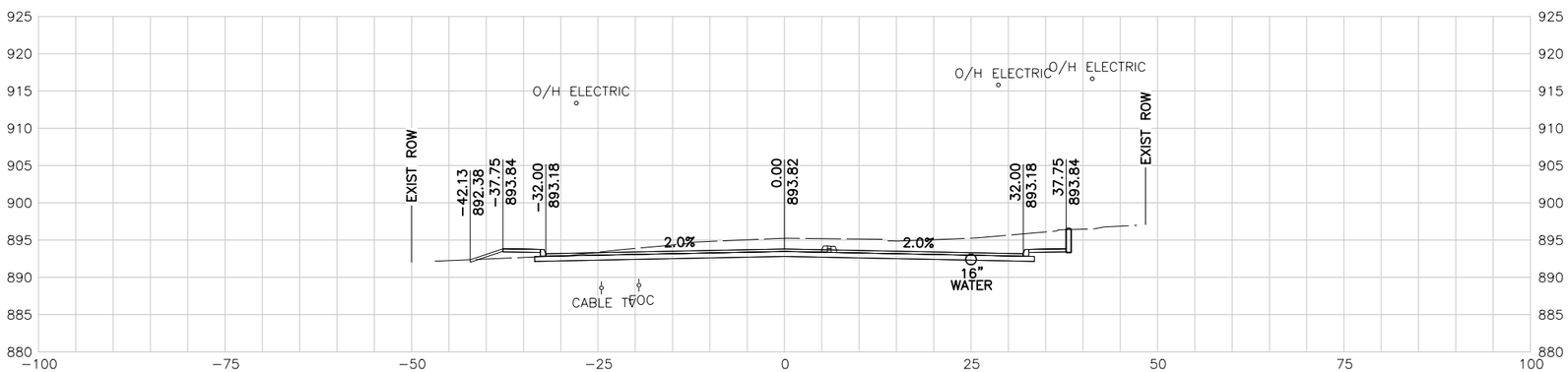

131+50.00 R1

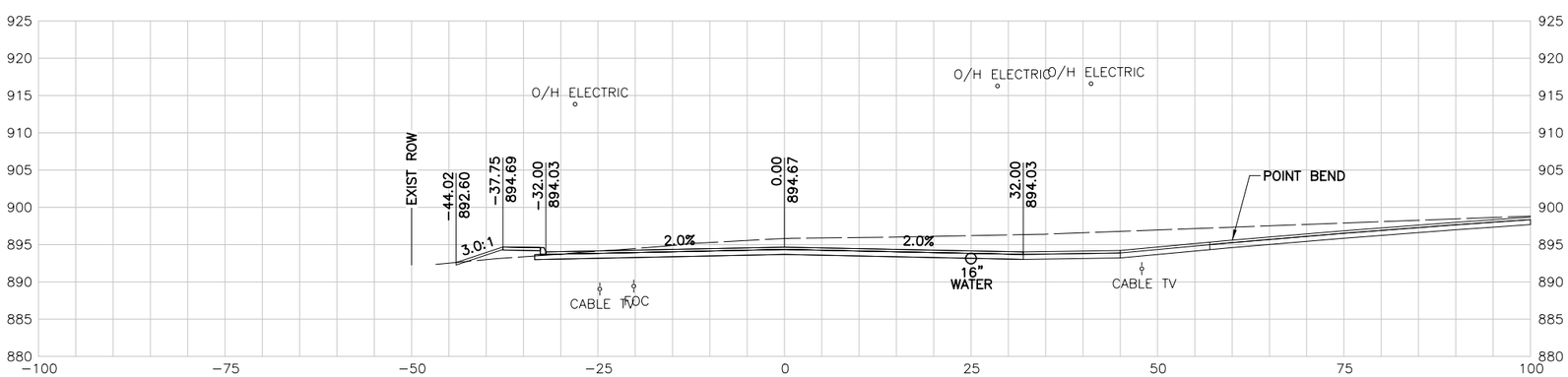

131+00.00 R1

10 5 0 10 20
SCALE FEET

NOTES:

1. UTILITY LOCATIONS ARE APPROXIMATE AND ARE SHOWN FROM THE BEST INFORMATION PROVIDED BY THE UTILITY COMPANIES AT THE TIME PLANS WERE PREPARED.
2. CONTRACTOR SHALL NOTIFY UTILITY COMPANIES AND LOCATE UTILITIES A MINIMUM OF 48 HOURS BEFORE BEGINNING WORK IN AREA.
3. CALL THE TEXAS STATE WIDE ONE CALL LOCATOR NUMBER 1-800-344-8377 48 HOURS BEFORE BEGINNING ANY EXCAVATION.

   DUE TO FEDERAL REGULATION TITLE 49, PART 192.181, CPS MUST MAINTAIN ACCESS TO GAS VALVES AT ALL TIMES. THE CONTRACTOR MUST PROTECT AND WORK AROUND ANY GAS VALVES THAT ARE IN THE PROJECT AREA.

   THE CONTRACTOR WILL BE RESPONSIBLE FOR PROTECTING ALL EXISTING UTILITIES ADJACENT TO THE WORK AREA.
4. SEE CROSS STREET PLAN AND PROFILE SHEETS AND INTERSECTION LAYOUT SHEETS FOR ADDITIONAL INFORMATION AT THE CROSS STREET.
5. SEE DRIVEWAY SUMMARY FOR ADDITIONAL INFORMATION PERTAINING TO DRIVEWAYS.

PRELIMINARY

90% SUBMITTAL
FOR INTERIM REVIEW ONLY
NOT FOR CONSTRUCTION, BIDDING, OR PERMIT PURPOSES.

CP&Y

ENGINEER JAIME AGUILAR
P.E. No. 87606 DATE 2/23/2017

BEXAR COUNTY
PUBLIC WORKS DEPARTMENT

NO	DATE	DESCRIPTION	DWG	CHK

REVISIONS

CP&Y
12500 SAN PEDRO AVENUE, SUITE 450
SAN ANTONIO, TEXAS 78216
TEL (210) 494-8004
FAX (210) 494-8286
T.B.P.E. FIRM # 1741

TALLEY ROAD

CROSS SECTIONS

SHEET 21 OF 88

PROJECT NUMBER:		SHEET NO.	
		569	
DESIGNED BY:	CP&Y	ROADWAY/HIGHWAY:	
CHECKED BY:	CP&Y	TALLEY ROAD	
DRAWN BY:	CP&Y	STATE	COUNTY
CHECKED BY:	CP&Y	TEXAS	BEXAR

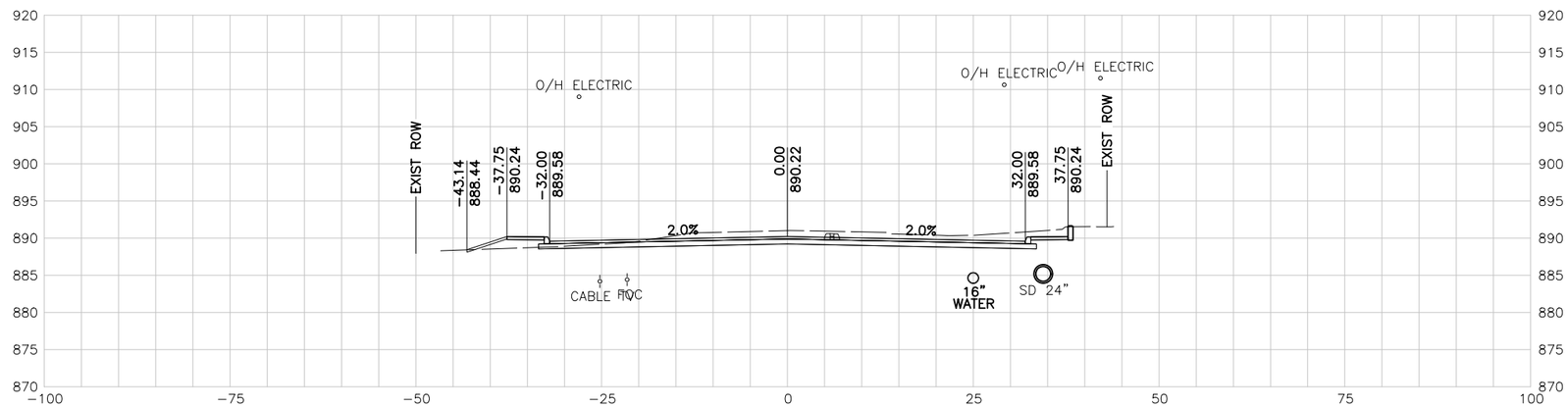

133+50.00 R1

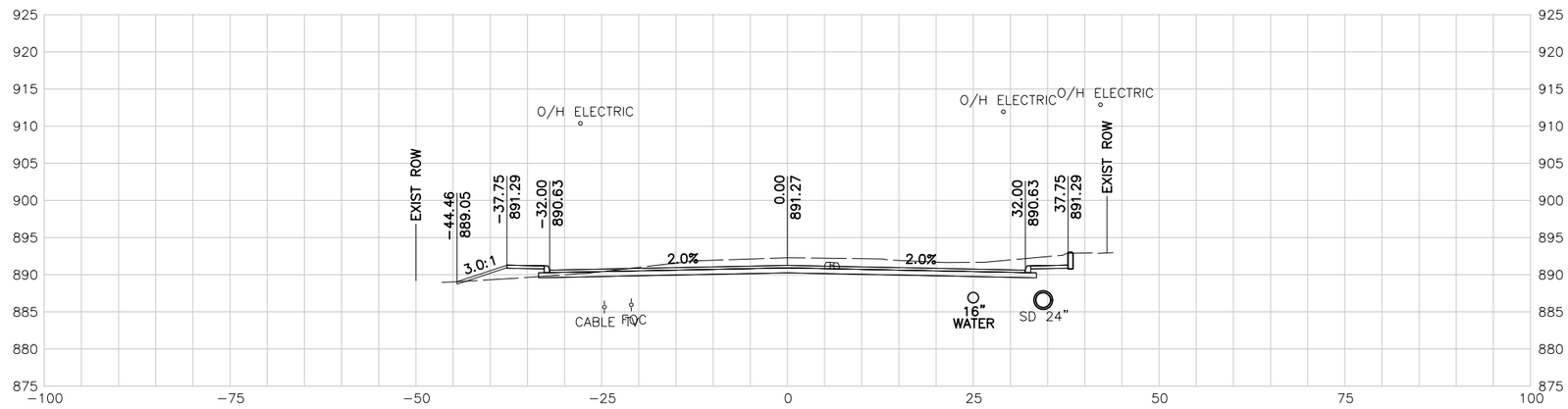

133+00.00 R1

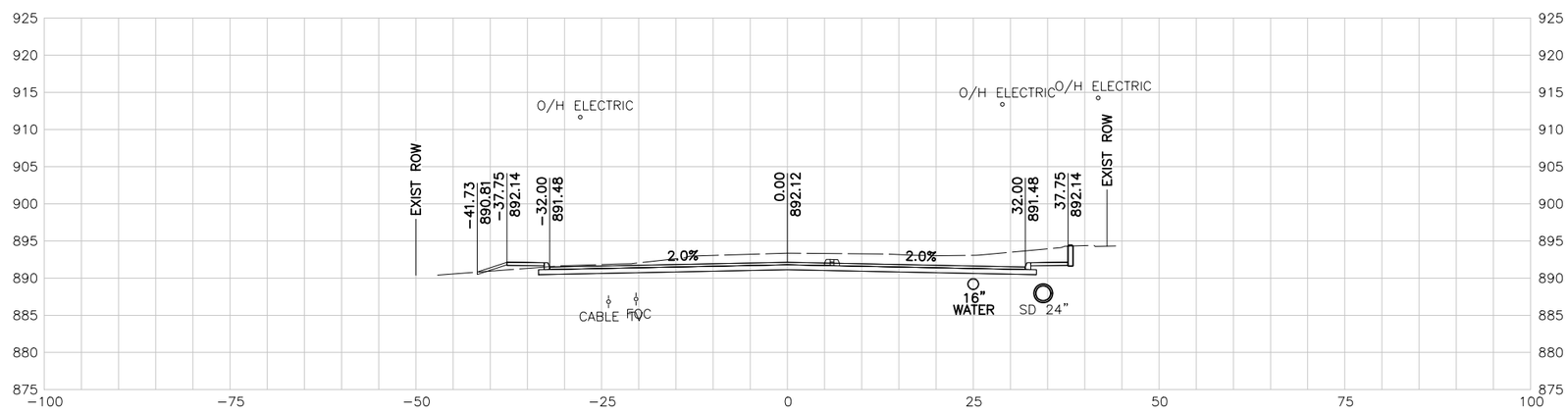

132+50.00 R1

10 5 0 10 20
SCALE FEET

NOTES:

1. UTILITY LOCATIONS ARE APPROXIMATE AND ARE SHOWN FROM THE BEST INFORMATION PROVIDED BY THE UTILITY COMPANIES AT THE TIME PLANS WERE PREPARED.
2. CONTRACTOR SHALL NOTIFY UTILITY COMPANIES AND LOCATE UTILITIES A MINIMUM OF 48 HOURS BEFORE BEGINNING WORK IN AREA.
3. CALL THE TEXAS STATE WIDE ONE CALL LOCATOR NUMBER 1-800-344-8377 48 HOURS BEFORE BEGINNING ANY EXCAVATION.

   DUE TO FEDERAL REGULATION TITLE 49, PART 192.181, CPS MUST MAINTAIN ACCESS TO GAS VALVES AT ALL TIMES. THE CONTRACTOR MUST PROTECT AND WORK AROUND ANY GAS VALVES THAT ARE IN THE PROJECT AREA.

   THE CONTRACTOR WILL BE RESPONSIBLE FOR PROTECTING ALL EXISTING UTILITIES ADJACENT TO THE WORK AREA.
4. SEE CROSS STREET PLAN AND PROFILE SHEETS AND INTERSECTION LAYOUT SHEETS FOR ADDITIONAL INFORMATION AT THE CROSS STREET.
5. SEE DRIVEWAY SUMMARY FOR ADDITIONAL INFORMATION PERTAINING TO DRIVEWAYS.

PRELIMINARY

90% SUBMITTAL
FOR INTERIM REVIEW ONLY
NOT FOR CONSTRUCTION, BIDDING, OR PERMIT PURPOSES.

CP&Y

ENGINEER JAIME AGUILAR
P.E. No. 87606 DATE 2/23/2017

BEXAR COUNTY
PUBLIC WORKS DEPARTMENT

NO	DATE	DESCRIPTION	DWG	CHK

REVISIONS

CP&Y
12500 SAN PEDRO AVENUE, SUITE 450
SAN ANTONIO, TEXAS 78216
TEL (210) 494-8004
FAX (210) 494-8286
T.B.P.E. FIRM # 1741

TALLEY ROAD

CROSS SECTIONS

SHEET 22 OF 88

PROJECT NUMBER:		SHEET NO.	
		570	
DESIGNED BY:	CP&Y	ROADWAY/HIGHWAY:	
CHECKED BY:	CP&Y	TALLEY ROAD	
DRAWN BY:	CP&Y	STATE	COUNTY
CHECKED BY:	CP&Y	TEXAS	BEXAR

cpybw_ANSIB.tbl
cpypdf_ANSIB.pltcfg
pw:/Active Projects/BEXA14048.01/8.00 Plans and Drawings/8.10 Base Files/14048RDxsec_90.dgn
2/23/2017 4:31:06 PM mberan
pw:/Active Projects/BEXA14048.01/8.00 Plans and Drawings/8.10 Base Files/14048RDxsec_90.dgn

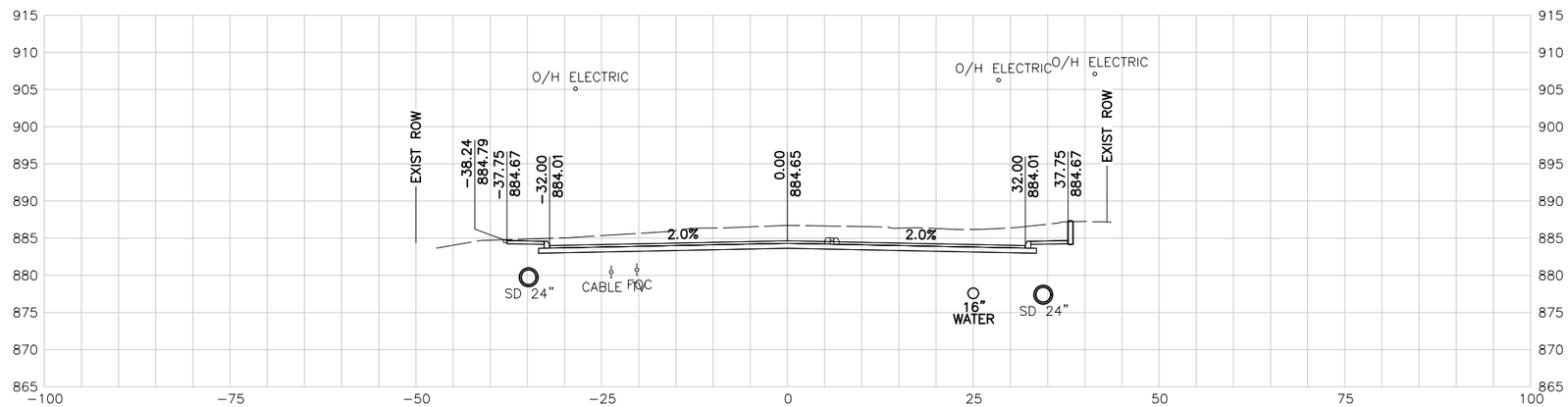

135+00.00 R1

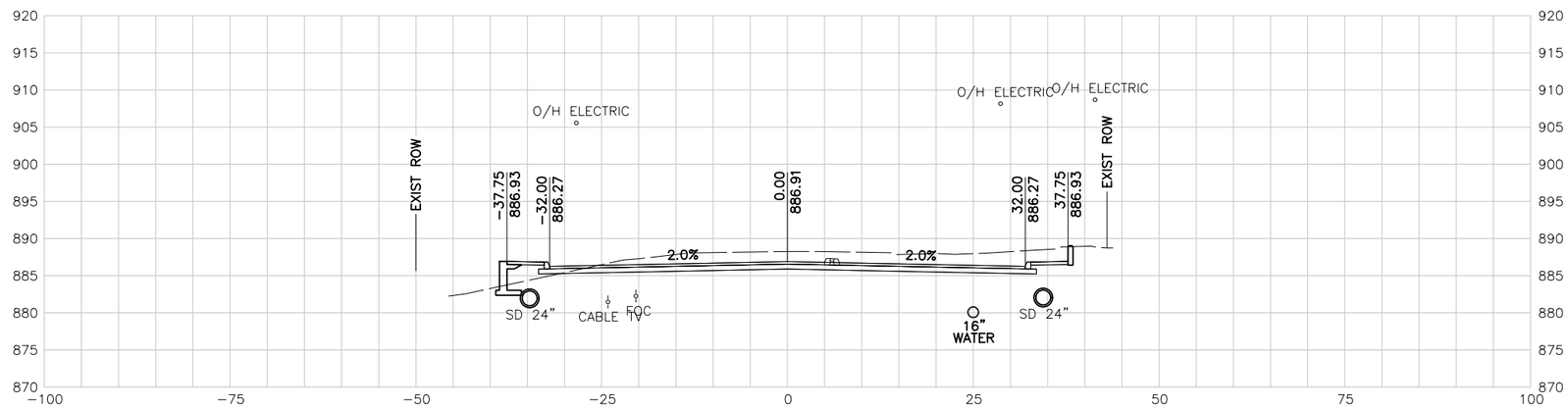

134+50.00 R1

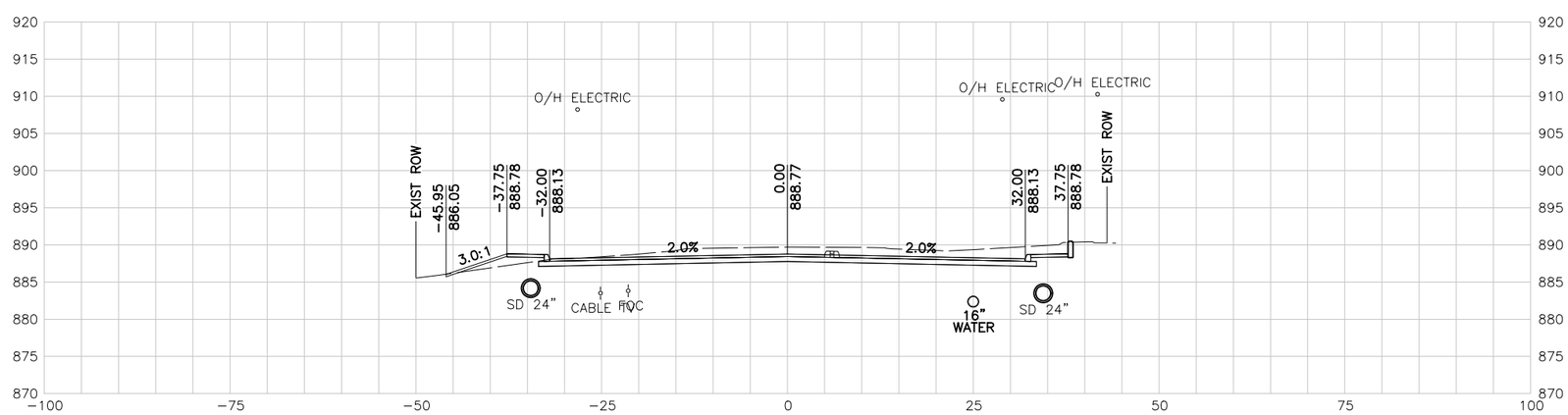

134+00.00 R1

10 5 0 10 20
SCALE FEET

NOTES:

1. UTILITY LOCATIONS ARE APPROXIMATE AND ARE SHOWN FROM THE BEST INFORMATION PROVIDED BY THE UTILITY COMPANIES AT THE TIME PLANS WERE PREPARED.
2. CONTRACTOR SHALL NOTIFY UTILITY COMPANIES AND LOCATE UTILITIES A MINIMUM OF 48 HOURS BEFORE BEGINNING WORK IN AREA.
3. CALL THE TEXAS STATE WIDE ONE CALL LOCATOR NUMBER 1-800-344-8377 48 HOURS BEFORE BEGINNING ANY EXCAVATION.

   DUE TO FEDERAL REGULATION TITLE 49, PART 192.181, CPS MUST MAINTAIN ACCESS TO GAS VALVES AT ALL TIMES. THE CONTRACTOR MUST PROTECT AND WORK AROUND ANY GAS VALVES THAT ARE IN THE PROJECT AREA.

   THE CONTRACTOR WILL BE RESPONSIBLE FOR PROTECTING ALL EXISTING UTILITIES ADJACENT TO THE WORK AREA.
4. SEE CROSS STREET PLAN AND PROFILE SHEETS AND INTERSECTION LAYOUT SHEETS FOR ADDITIONAL INFORMATION AT THE CROSS STREET.
5. SEE DRIVEWAY SUMMARY FOR ADDITIONAL INFORMATION PERTAINING TO DRIVEWAYS.

PRELIMINARY

90% SUBMITTAL
FOR INTERIM REVIEW ONLY
NOT FOR CONSTRUCTION, BIDDING, OR PERMIT PURPOSES.

CP&Y

ENGINEER JAIME AGUILAR
P.E. No. 87606 DATE 2/23/2017

BEXAR COUNTY
PUBLIC WORKS DEPARTMENT

NO	DATE	DESCRIPTION	DWG	CHK

REVISIONS

CP&Y
12500 SAN PEDRO AVENUE, SUITE 450
SAN ANTONIO, TEXAS 78216
TEL (210) 494-8004
FAX (210) 494-8286
T.B.P.E. FIRM # 1741

TALLEY ROAD

CROSS SECTIONS

SHEET 23 OF 88

PROJECT NUMBER:		SHEET NO.
		571
DESIGNED BY: CP&Y	ROADWAY/HIGHWAY:	
CHECKED BY: CP&Y	TALLEY ROAD	
DRAWN BY: CP&Y	STATE	COUNTY
CHECKED BY: CP&Y	TEXAS	BEXAR

cpybw_ANSIB.tbl
cpypdf_ANSIB.pltcfg
pw:/Active Projects/BEXA14048.01/8.00 Plans and Drawings/8.10 Base Files/14048RDxsec_90.dgn
2/23/2017 4:31:06 PM mberon
pw:/Active Projects/BEXA14048.01/8.00 Plans and Drawings/8.10 Base Files/14048RDxsec_90.dgn

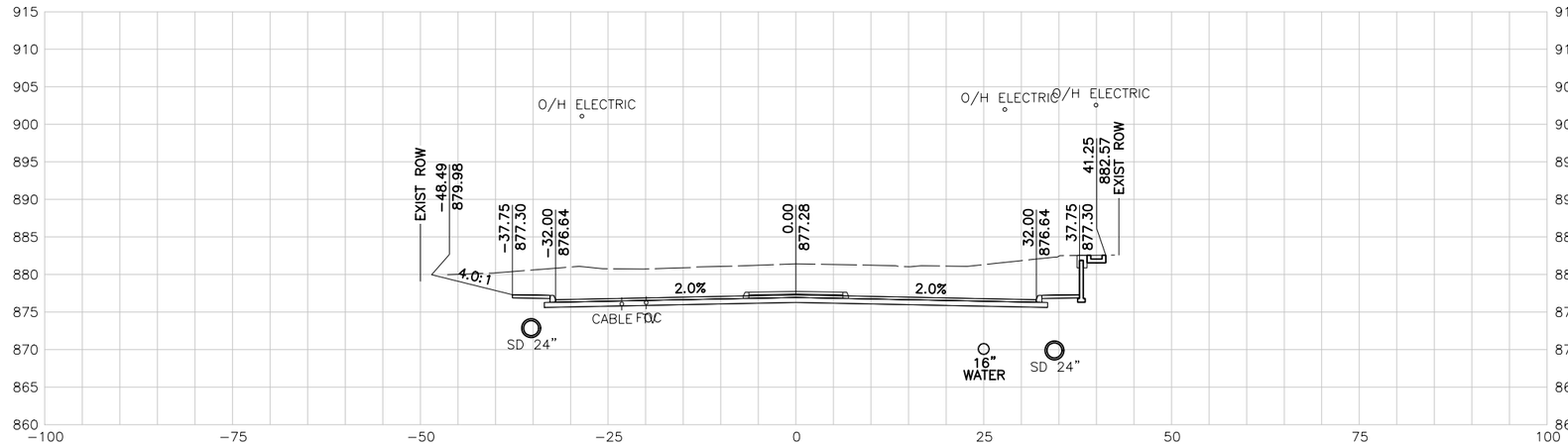

136+50.00 R1

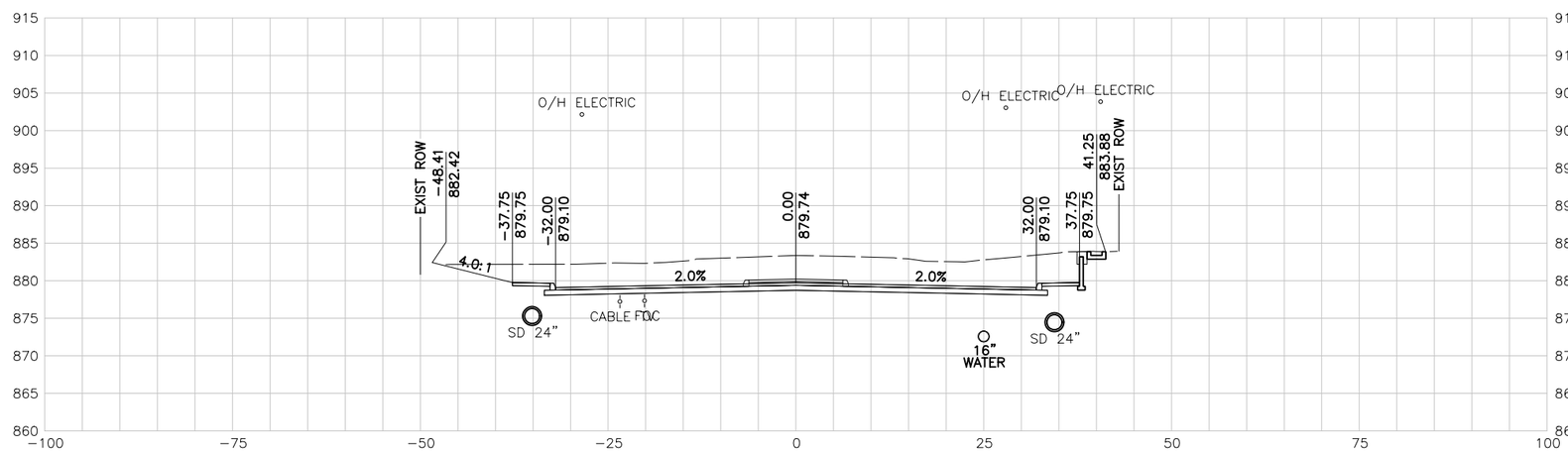

136+00.00 R1

135+50.00 R1

10 5 0 10 20
SCALE FEET

NOTES:

1. UTILITY LOCATIONS ARE APPROXIMATE AND ARE SHOWN FROM THE BEST INFORMATION PROVIDED BY THE UTILITY COMPANIES AT THE TIME PLANS WERE PREPARED.
2. CONTRACTOR SHALL NOTIFY UTILITY COMPANIES AND LOCATE UTILITIES A MINIMUM OF 48 HOURS BEFORE BEGINNING WORK IN AREA.
3. CALL THE TEXAS STATE WIDE ONE CALL LOCATOR NUMBER 1-800-344-8377 48 HOURS BEFORE BEGINNING ANY EXCAVATION.

   DUE TO FEDERAL REGULATION TITLE 49, PART 192.181, CPS MUST MAINTAIN ACCESS TO GAS VALVES AT ALL TIMES. THE CONTRACTOR MUST PROTECT AND WORK AROUND ANY GAS VALVES THAT ARE IN THE PROJECT AREA.

   THE CONTRACTOR WILL BE RESPONSIBLE FOR PROTECTING ALL EXISTING UTILITIES ADJACENT TO THE WORK AREA.
4. SEE CROSS STREET PLAN AND PROFILE SHEETS AND INTERSECTION LAYOUT SHEETS FOR ADDITIONAL INFORMATION AT THE CROSS STREET.
5. SEE DRIVEWAY SUMMARY FOR ADDITIONAL INFORMATION PERTAINING TO DRIVEWAYS.

PRELIMINARY

90% SUBMITTAL
FOR INTERIM REVIEW ONLY
NOT FOR CONSTRUCTION, BIDDING, OR PERMIT PURPOSES.

CP&Y

ENGINEER JAIME AGUILAR
P.E. No. 87606 DATE 2/23/2017

BEXAR COUNTY
PUBLIC WORKS DEPARTMENT

NO	DATE	DESCRIPTION	DWG	CHK

REVISIONS

CP&Y
12500 SAN PEDRO AVENUE, SUITE 450
SAN ANTONIO, TEXAS 78216
TEL (210) 494-8004
FAX (210) 494-8286
T.B.P.E. FIRM # 1741

TALLEY ROAD

CROSS SECTIONS

SHEET 24 OF 88

PROJECT NUMBER:		SHEET NO.	
		572	
DESIGNED BY:	CP&Y	ROADWAY/HIGHWAY:	
CHECKED BY:	CP&Y	TALLEY ROAD	
DRAWN BY:	CP&Y	STATE	COUNTY
CHECKED BY:	CP&Y	TEXAS	BEXAR

2/23/2017 4:31:07 PM mberan
cpybw_ANSIB.tbl
cpycd_ANSIB.pltcfg
pw:/Active Projects/BEXA14048.01/8.00 Plans and Drawings/8.10 Base Files/14048RDxsec_90.dgn
pw:/Active Projects/BEXA14048.01/8.00 Plans and Drawings/8.10 Base Files/14048RDxsec_90.dgn

10 5 0 10 20
SCALE FEET

NOTES:

1. UTILITY LOCATIONS ARE APPROXIMATE AND ARE SHOWN FROM THE BEST INFORMATION PROVIDED BY THE UTILITY COMPANIES AT THE TIME PLANS WERE PREPARED.
2. CONTRACTOR SHALL NOTIFY UTILITY COMPANIES AND LOCATE UTILITIES A MINIMUM OF 48 HOURS BEFORE BEGINNING WORK IN AREA.
3. CALL THE TEXAS STATE WIDE ONE CALL LOCATOR NUMBER 1-800-344-8377 48 HOURS BEFORE BEGINNING ANY EXCAVATION.

   DUE TO FEDERAL REGULATION TITLE 49, PART 192.181, CPS MUST MAINTAIN ACCESS TO GAS VALVES AT ALL TIMES. THE CONTRACTOR MUST PROTECT AND WORK AROUND ANY GAS VALVES THAT ARE IN THE PROJECT AREA.

   THE CONTRACTOR WILL BE RESPONSIBLE FOR PROTECTING ALL EXISTING UTILITIES ADJACENT TO THE WORK AREA.
4. SEE CROSS STREET PLAN AND PROFILE SHEETS AND INTERSECTION LAYOUT SHEETS FOR ADDITIONAL INFORMATION AT THE CROSS STREET.
5. SEE DRIVEWAY SUMMARY FOR ADDITIONAL INFORMATION PERTAINING TO DRIVEWAYS.

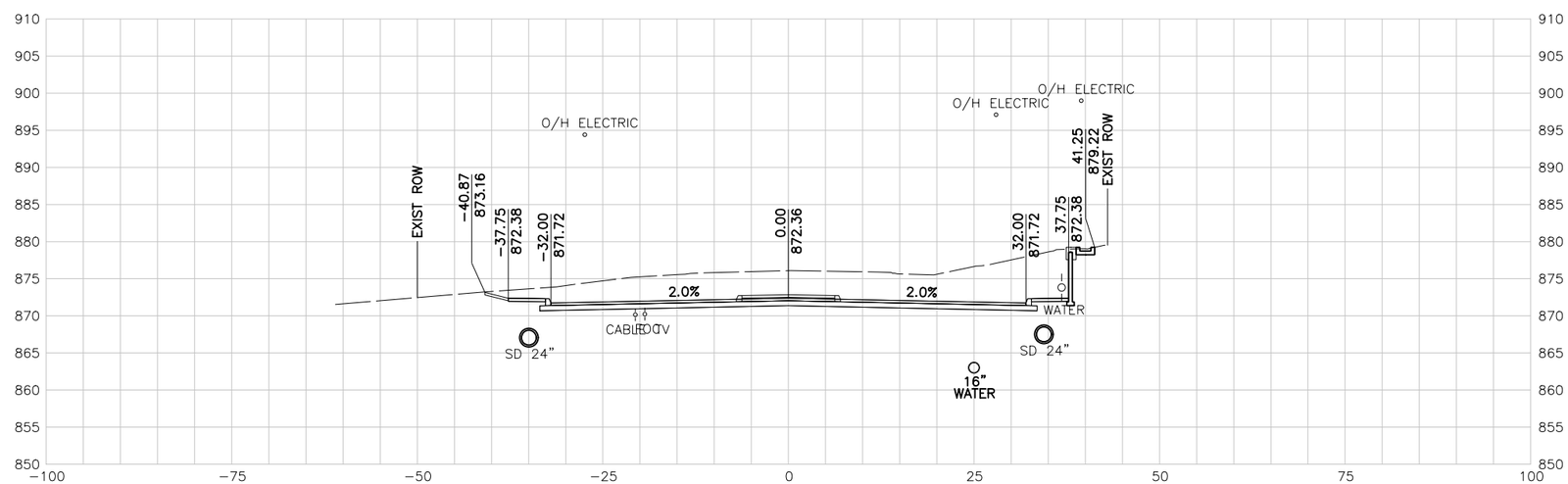

137+50.00 R1

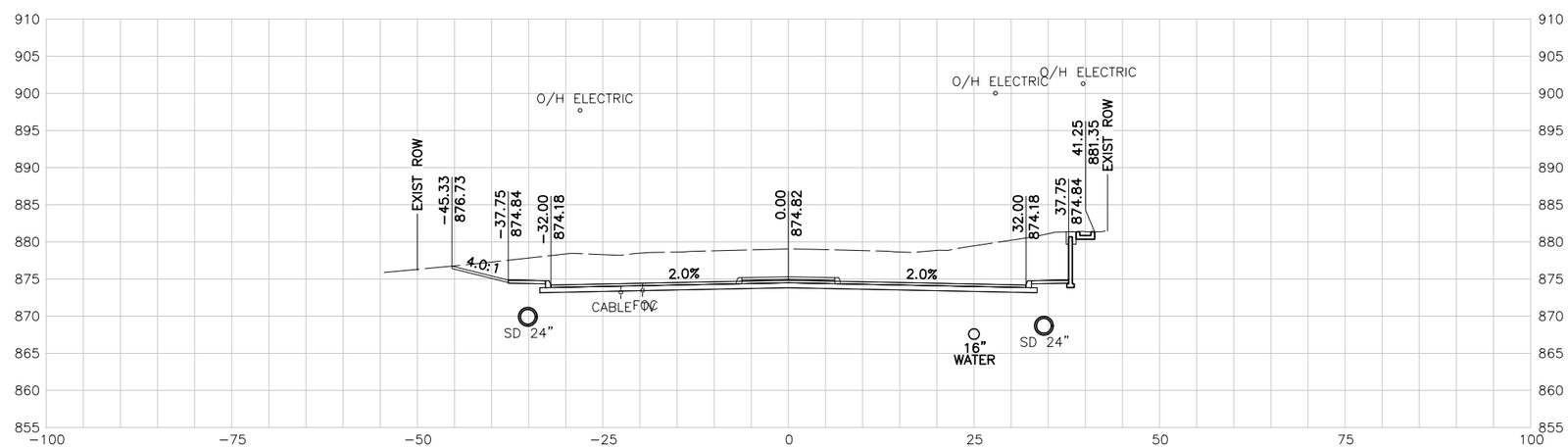

137+00.00 R1

PRELIMINARY

90% SUBMITTAL
FOR INTERIM REVIEW ONLY
NOT FOR CONSTRUCTION, BIDDING, OR PERMIT PURPOSES.

CP&Y

ENGINEER JAIME AGUILAR
P.E. No. 87606 DATE 2/23/2017

BEXAR COUNTY
PUBLIC WORKS DEPARTMENT

NO	DATE	DESCRIPTION	DWG	CHK

REVISIONS

CP&Y
12500 SAN PEDRO AVENUE, SUITE 450
SAN ANTONIO, TEXAS 78216
TEL (210) 494-8004
FAX (210) 494-8286
T.B.P.E. FIRM # 1741

TALLEY ROAD

CROSS SECTIONS

SHEET 25 OF 88

PROJECT NUMBER:		SHEET NO.	
		573	
DESIGNED BY:	CP&Y	ROADWAY/HIGHWAY:	
CHECKED BY:	CP&Y	TALLEY ROAD	
DRAWN BY:	CP&Y	STATE	COUNTY
CHECKED BY:	CP&Y	TEXAS	BEXAR

cpybw_ANSIB.tbl
cpypdf_ANSIB.pltcfg
pw:/Active Projects/BEXA14048.01/8.00 Plans and Drawings/8.10 Base Files/14048RDxsec_90.dgn
2/23/2017 4:31:07 PM mberon
pw:/Active Projects/BEXA14048.01/8.00 Plans and Drawings/8.10 Base Files/14048RDxsec_90.dgn

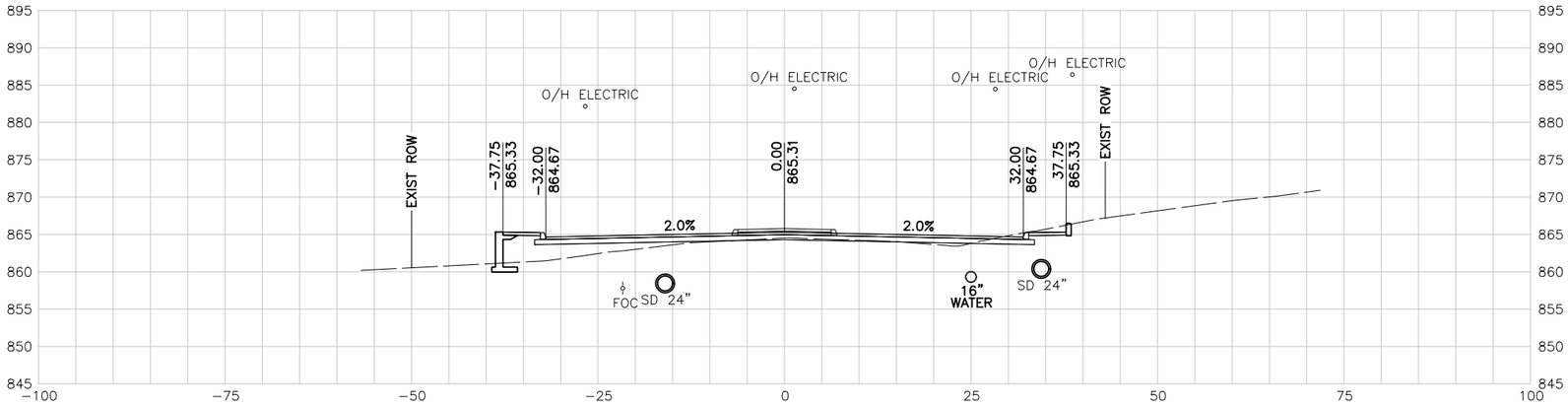

139+00.00 R1

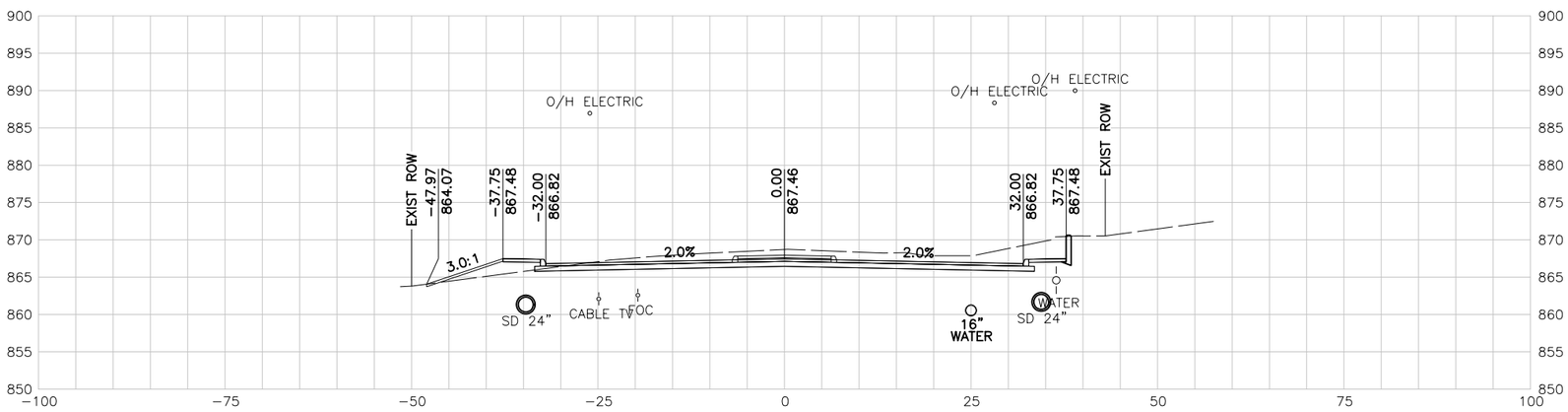

138+50.00 R1

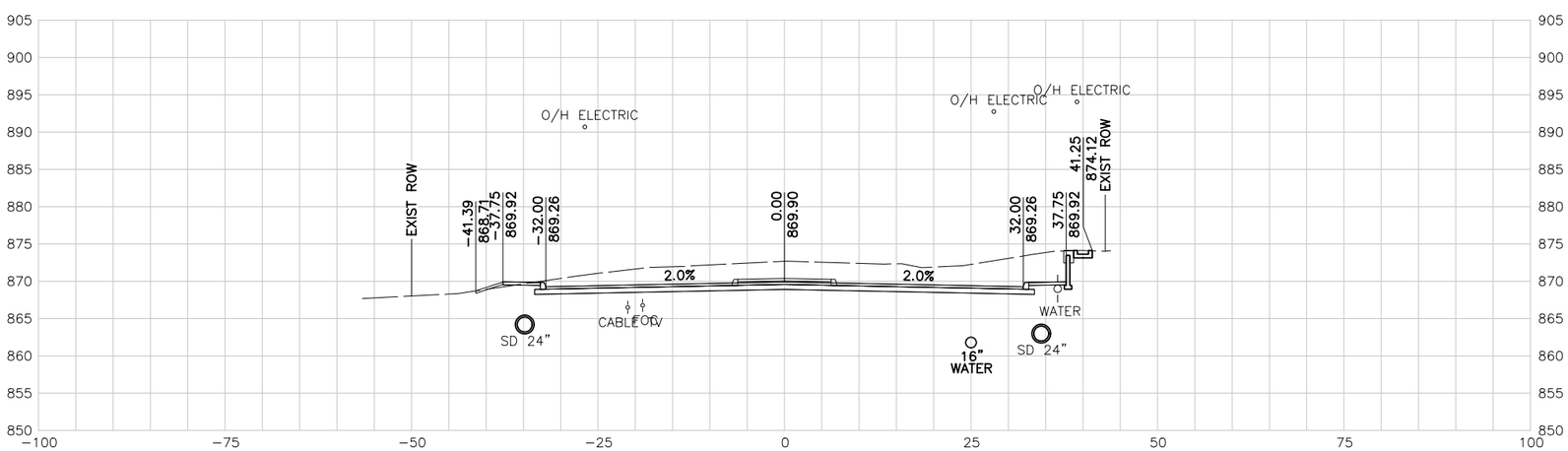

138+00.00 R1

10 5 0 10 20
SCALE FEET

NOTES:

1. UTILITY LOCATIONS ARE APPROXIMATE AND ARE SHOWN FROM THE BEST INFORMATION PROVIDED BY THE UTILITY COMPANIES AT THE TIME PLANS WERE PREPARED.
2. CONTRACTOR SHALL NOTIFY UTILITY COMPANIES AND LOCATE UTILITIES A MINIMUM OF 48 HOURS BEFORE BEGINNING WORK IN AREA.
3. CALL THE TEXAS STATE WIDE ONE CALL LOCATOR NUMBER 1-800-344-8377 48 HOURS BEFORE BEGINNING ANY EXCAVATION.

   DUE TO FEDERAL REGULATION TITLE 49, PART 192.181, CPS MUST MAINTAIN ACCESS TO GAS VALVES AT ALL TIMES. THE CONTRACTOR MUST PROTECT AND WORK AROUND ANY GAS VALVES THAT ARE IN THE PROJECT AREA.

   THE CONTRACTOR WILL BE RESPONSIBLE FOR PROTECTING ALL EXISTING UTILITIES ADJACENT TO THE WORK AREA.
4. SEE CROSS STREET PLAN AND PROFILE SHEETS AND INTERSECTION LAYOUT SHEETS FOR ADDITIONAL INFORMATION AT THE CROSS STREET.
5. SEE DRIVEWAY SUMMARY FOR ADDITIONAL INFORMATION PERTAINING TO DRIVEWAYS.

PRELIMINARY

90% SUBMITTAL
FOR INTERIM REVIEW ONLY
NOT FOR CONSTRUCTION, BIDDING, OR PERMIT PURPOSES.

CP&Y

ENGINEER JAIME AGUILAR
P.E. No. 87606 DATE 2/23/2017

BEXAR COUNTY
PUBLIC WORKS DEPARTMENT

NO	DATE	DESCRIPTION	DWG	CHK

REVISIONS

CP&Y
12500 SAN PEDRO AVENUE, SUITE 450
SAN ANTONIO, TEXAS 78216
TEL (210) 494-8004
FAX (210) 494-8286
T.B.P.E. FIRM # 1741

TALLEY ROAD

CROSS SECTIONS

SHEET 26 OF 88

PROJECT NUMBER:		SHEET NO.
		574
DESIGNED BY: CP&Y	ROADWAY/HIGHWAY:	
CHECKED BY: CP&Y	TALLEY ROAD	
DRAWN BY: CP&Y	STATE	COUNTY
CHECKED BY: CP&Y	TEXAS	BEXAR

cpybw_ANSIB.tbl
cpypdf_ANSIB.pltcfg
pw:/Active Projects/BEXA14048.01/8.00 Plans and Drawings/8.10 Base Files/14048RDxsec_90.dgn
2/23/2017 4:31:08 PM mberon
pw:/Active Projects/BEXA14048.01/8.00 Plans and Drawings/8.10 Base Files/14048RDxsec_90.dgn

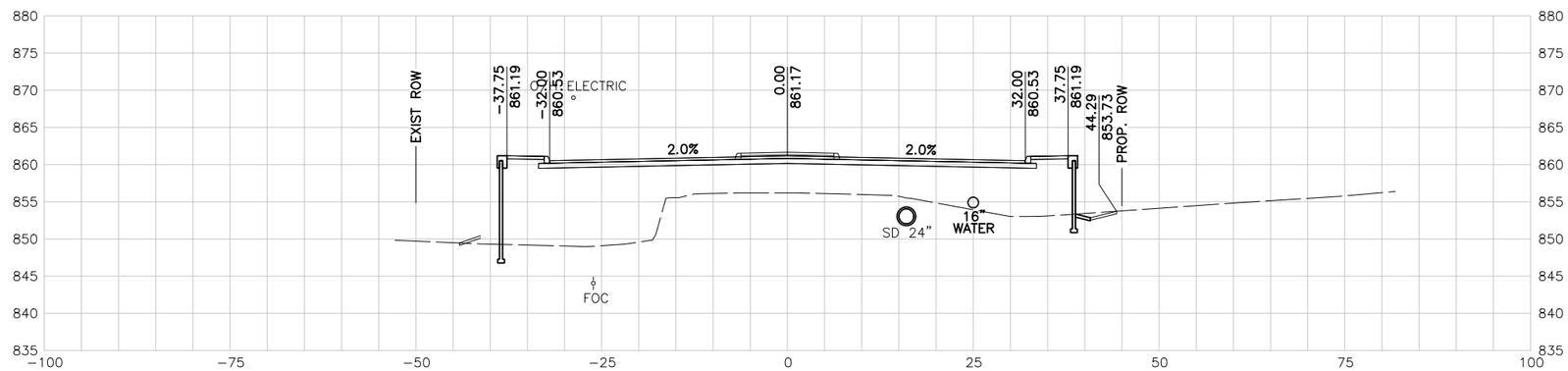

140+50.00 R1

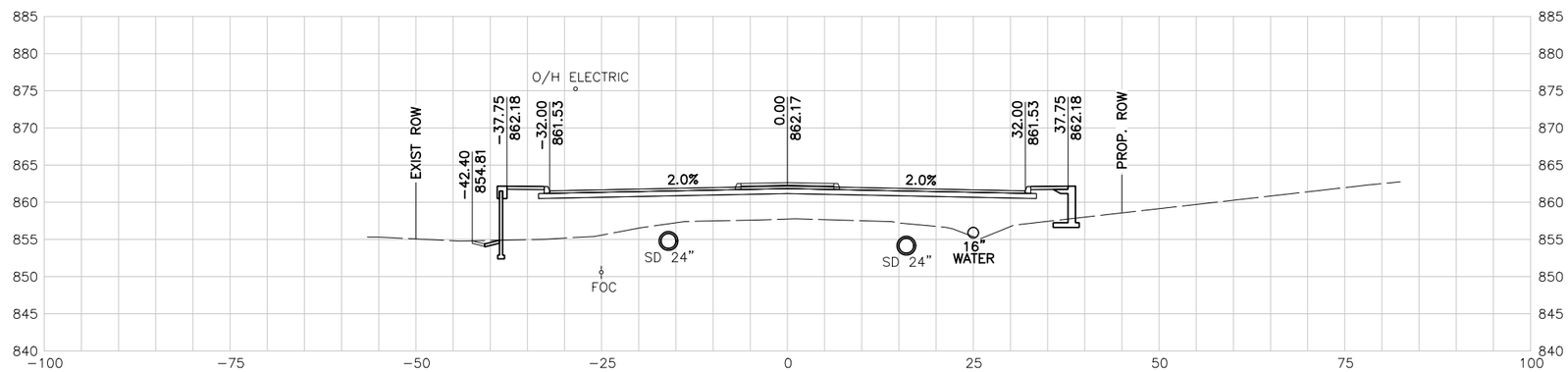

140+00.00 R1

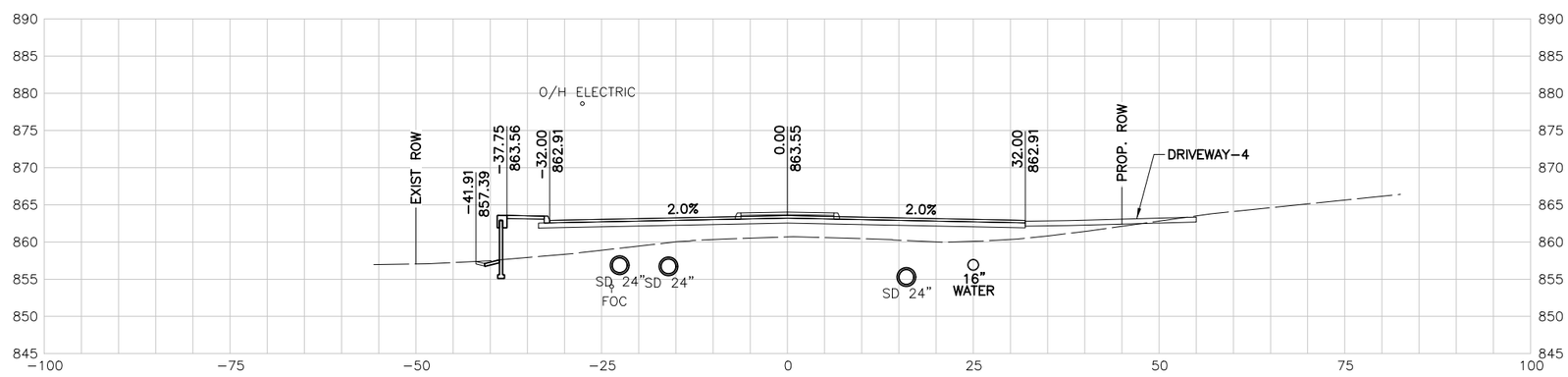

139+50.00 R1

10 5 0 10 20
SCALE FEET

NOTES:

1. UTILITY LOCATIONS ARE APPROXIMATE AND ARE SHOWN FROM THE BEST INFORMATION PROVIDED BY THE UTILITY COMPANIES AT THE TIME PLANS WERE PREPARED.
2. CONTRACTOR SHALL NOTIFY UTILITY COMPANIES AND LOCATE UTILITIES A MINIMUM OF 48 HOURS BEFORE BEGINNING WORK IN AREA.
3. CALL THE TEXAS STATE WIDE ONE CALL LOCATOR NUMBER 1-800-344-8377 48 HOURS BEFORE BEGINNING ANY EXCAVATION.

   DUE TO FEDERAL REGULATION TITLE 49, PART 192.181, CPS MUST MAINTAIN ACCESS TO GAS VALVES AT ALL TIMES. THE CONTRACTOR MUST PROTECT AND WORK AROUND ANY GAS VALVES THAT ARE IN THE PROJECT AREA.

   THE CONTRACTOR WILL BE RESPONSIBLE FOR PROTECTING ALL EXISTING UTILITIES ADJACENT TO THE WORK AREA.
4. SEE CROSS STREET PLAN AND PROFILE SHEETS AND INTERSECTION LAYOUT SHEETS FOR ADDITIONAL INFORMATION AT THE CROSS STREET.
5. SEE DRIVEWAY SUMMARY FOR ADDITIONAL INFORMATION PERTAINING TO DRIVEWAYS.

PRELIMINARY

90% SUBMITTAL
FOR INTERIM REVIEW ONLY
NOT FOR CONSTRUCTION, BIDDING, OR PERMIT PURPOSES.

CP&Y

ENGINEER JAIME AGUILAR
P.E. No. 87606 DATE 2/23/2017

BEXAR COUNTY
PUBLIC WORKS DEPARTMENT

NO	DATE	DESCRIPTION	DWG	CHK

REVISIONS

CP&Y
12500 SAN PEDRO AVENUE, SUITE 450
SAN ANTONIO, TEXAS 78216
TEL (210) 494-8004
FAX (210) 494-8286
T.B.P.E. FIRM # 1741

TALLEY ROAD

CROSS SECTIONS

SHEET 27 OF 88

PROJECT NUMBER:		SHEET NO.	
		575	
DESIGNED BY:	CP&Y	ROADWAY/HIGHWAY:	
CHECKED BY:	CP&Y	TALLEY ROAD	
DRAWN BY:	CP&Y	STATE	COUNTY
CHECKED BY:	CP&Y	TEXAS	BEXAR

cpybw_ANSIB.tbl
cpypdf_ANSIB.pltcfg
pw:/Active Projects/BEXA14048.01/8.00 Plans and Drawings/8.10 Base Files/14048RDxsec_90.dgn
2/23/2017 4:31:08 PM mberan
pw:/Active Projects/BEXA14048.01/8.00 Plans and Drawings/8.10 Base Files/14048RDxsec_90.dgn

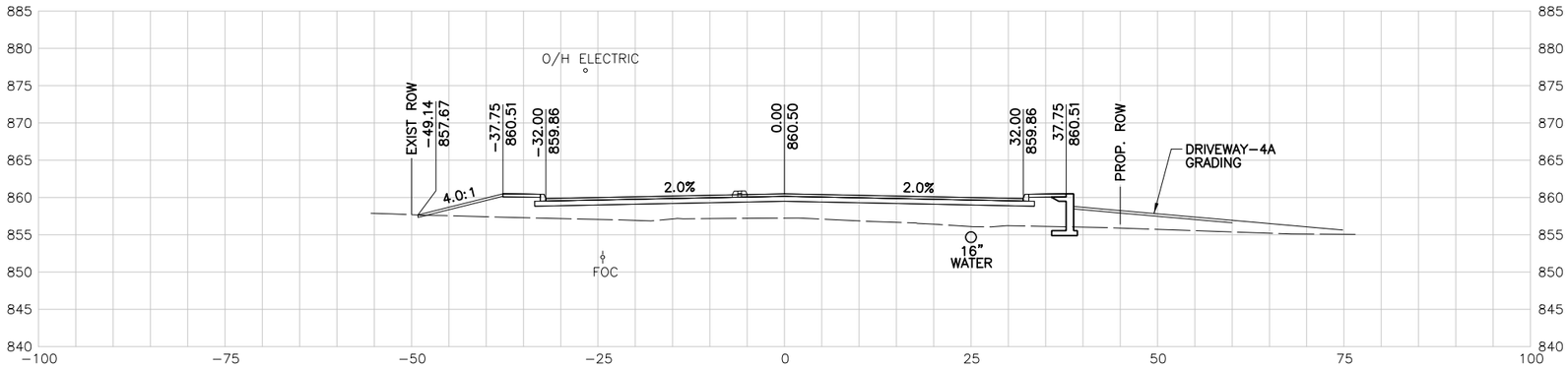

142+00.00 R1

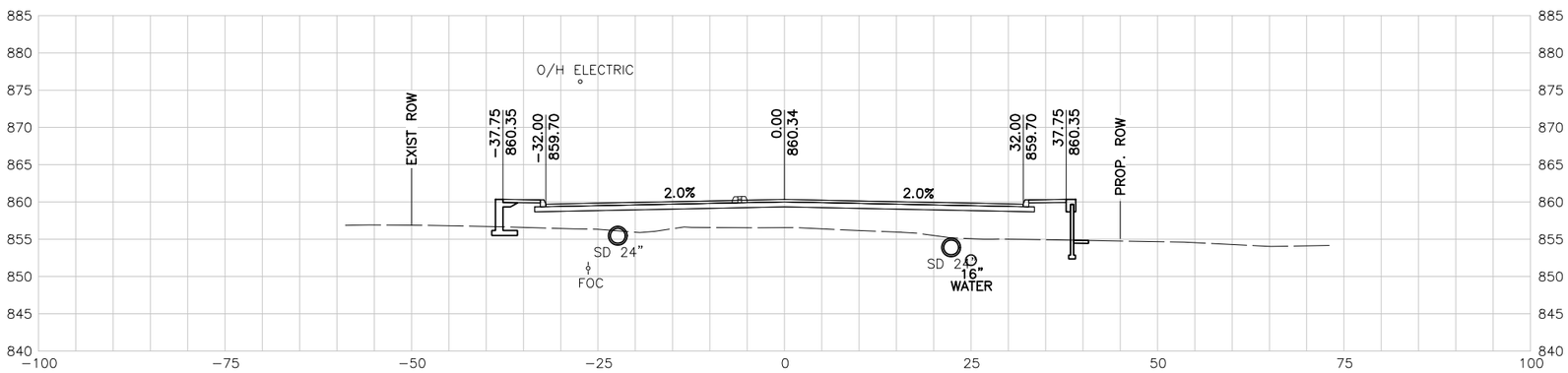

141+50.00 R1

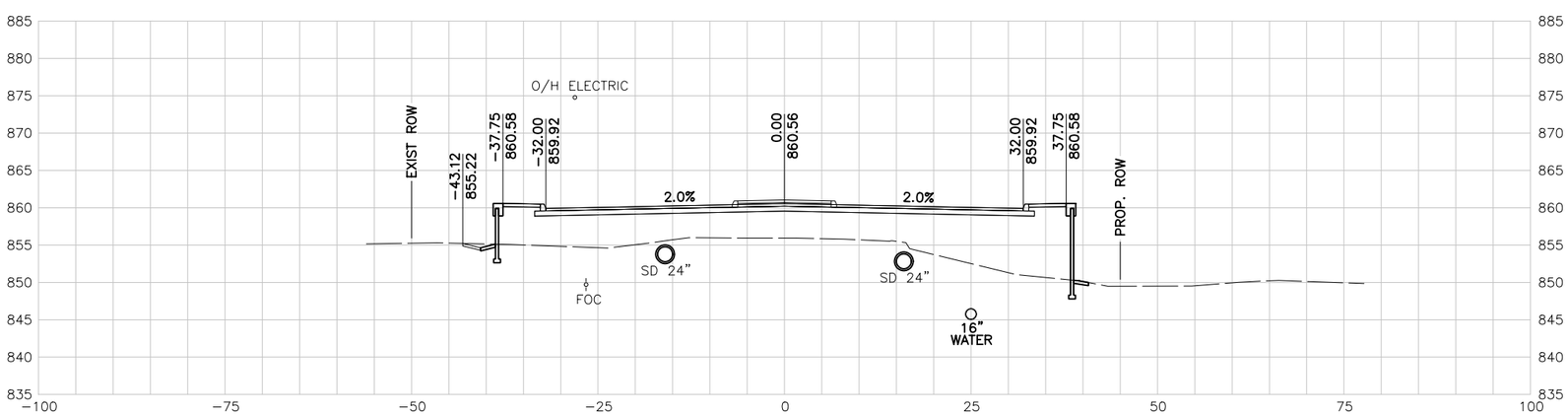

141+00.00 R1

10 5 0 10 20
SCALE FEET

NOTES:

1. UTILITY LOCATIONS ARE APPROXIMATE AND ARE SHOWN FROM THE BEST INFORMATION PROVIDED BY THE UTILITY COMPANIES AT THE TIME PLANS WERE PREPARED.
2. CONTRACTOR SHALL NOTIFY UTILITY COMPANIES AND LOCATE UTILITIES A MINIMUM OF 48 HOURS BEFORE BEGINNING WORK IN AREA.
3. CALL THE TEXAS STATE WIDE ONE CALL LOCATOR NUMBER 1-800-344-8377 48 HOURS BEFORE BEGINNING ANY EXCAVATION.

   DUE TO FEDERAL REGULATION TITLE 49, PART 192.181, CPS MUST MAINTAIN ACCESS TO GAS VALVES AT ALL TIMES. THE CONTRACTOR MUST PROTECT AND WORK AROUND ANY GAS VALVES THAT ARE IN THE PROJECT AREA.

   THE CONTRACTOR WILL BE RESPONSIBLE FOR PROTECTING ALL EXISTING UTILITIES ADJACENT TO THE WORK AREA.
4. SEE CROSS STREET PLAN AND PROFILE SHEETS AND INTERSECTION LAYOUT SHEETS FOR ADDITIONAL INFORMATION AT THE CROSS STREET.
5. SEE DRIVEWAY SUMMARY FOR ADDITIONAL INFORMATION PERTAINING TO DRIVEWAYS.

PRELIMINARY

90% SUBMITTAL
FOR INTERIM REVIEW ONLY
NOT FOR CONSTRUCTION, BIDDING, OR PERMIT PURPOSES.

CP&Y

ENGINEER JAIME AGUILAR
P.E. No. 87606 DATE 2/23/2017

BEXAR COUNTY
PUBLIC WORKS DEPARTMENT

NO	DATE	DESCRIPTION	DWG	CHK

REVISIONS

CP&Y
12500 SAN PEDRO AVENUE, SUITE 450
SAN ANTONIO, TEXAS 78216
TEL (210) 494-8004
FAX (210) 494-8286
T.B.P.E. FIRM # 1741

TALLEY ROAD

CROSS SECTIONS

SHEET 28 OF 88

PROJECT NUMBER:		SHEET NO.	
		576	
DESIGNED BY:	CP&Y	ROADWAY/HIGHWAY:	
CHECKED BY:	CP&Y	TALLEY ROAD	
DRAWN BY:	CP&Y	STATE	COUNTY
CHECKED BY:	CP&Y	TEXAS	BEXAR

cpybw_ANSIB.tbl
cpypdf_ANSIB.pltcfg
pw:/Active Projects/BEXA14048.01/8.00 Plans and Drawings/8.10 Base Files/14048RDxsec_90.dgn
2/23/2017 4:31:09 PM mberan
pw:/Active Projects/BEXA14048.01/8.00 Plans and Drawings/8.10 Base Files/14048RDxsec_90.dgn

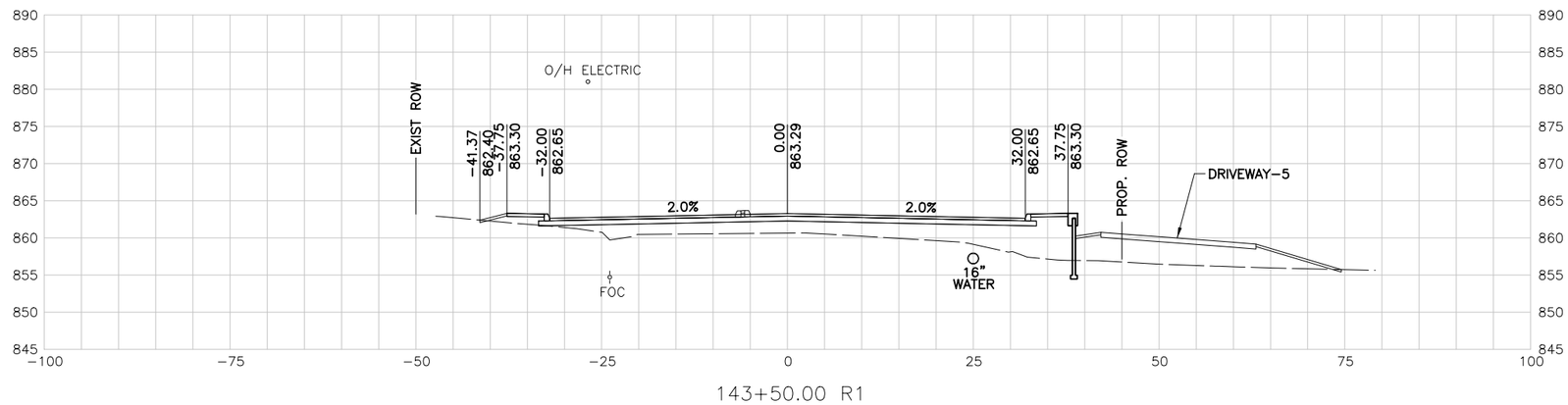

143+50.00 R1

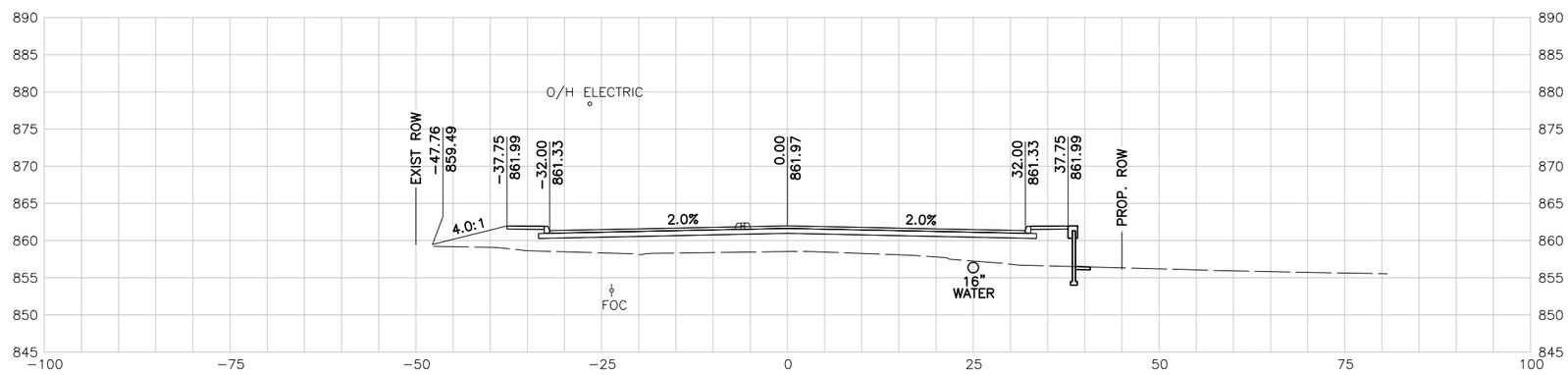

143+00.00 R1

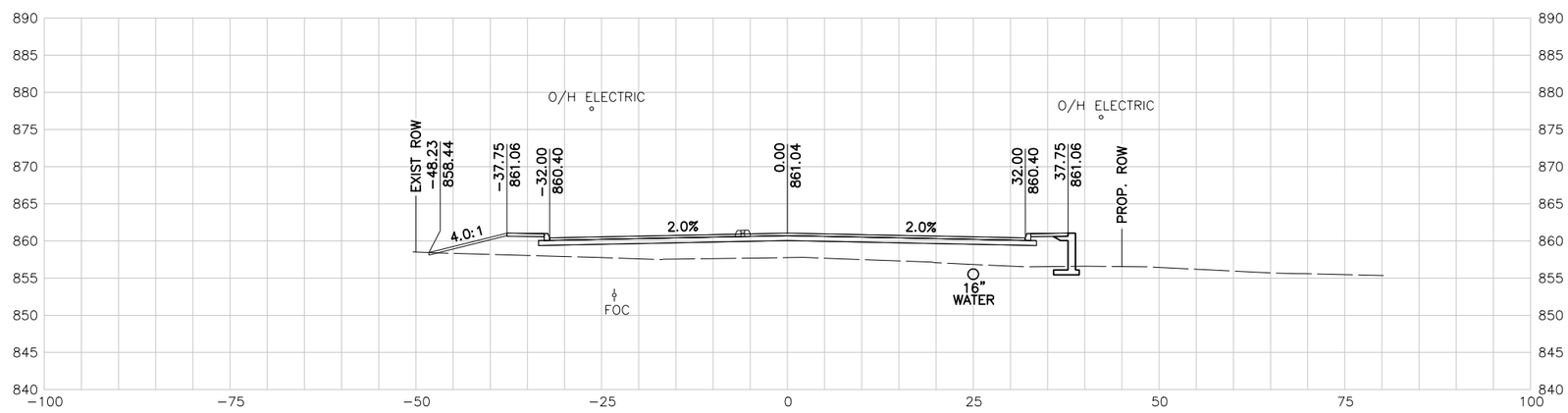

142+50.00 R1

10 5 0 10 20
SCALE FEET

NOTES:

1. UTILITY LOCATIONS ARE APPROXIMATE AND ARE SHOWN FROM THE BEST INFORMATION PROVIDED BY THE UTILITY COMPANIES AT THE TIME PLANS WERE PREPARED.
2. CONTRACTOR SHALL NOTIFY UTILITY COMPANIES AND LOCATE UTILITIES A MINIMUM OF 48 HOURS BEFORE BEGINNING WORK IN AREA.
3. CALL THE TEXAS STATE WIDE ONE CALL LOCATOR NUMBER 1-800-344-8377 48 HOURS BEFORE BEGINNING ANY EXCAVATION.

   DUE TO FEDERAL REGULATION TITLE 49, PART 192.181, CPS MUST MAINTAIN ACCESS TO GAS VALVES AT ALL TIMES. THE CONTRACTOR MUST PROTECT AND WORK AROUND ANY GAS VALVES THAT ARE IN THE PROJECT AREA.

   THE CONTRACTOR WILL BE RESPONSIBLE FOR PROTECTING ALL EXISTING UTILITIES ADJACENT TO THE WORK AREA.
4. SEE CROSS STREET PLAN AND PROFILE SHEETS AND INTERSECTION LAYOUT SHEETS FOR ADDITIONAL INFORMATION AT THE CROSS STREET.
5. SEE DRIVEWAY SUMMARY FOR ADDITIONAL INFORMATION PERTAINING TO DRIVEWAYS.

PRELIMINARY

90% SUBMITTAL
FOR INTERIM REVIEW ONLY
NOT FOR CONSTRUCTION, BIDDING, OR PERMIT PURPOSES.

CP&Y

ENGINEER JAIME AGUILAR
P.E. No. 87606 DATE 2/23/2017

BEXAR COUNTY
PUBLIC WORKS DEPARTMENT

NO	DATE	DESCRIPTION	DWG	CHK

REVISIONS

CP&Y
12500 SAN PEDRO AVENUE, SUITE 450
SAN ANTONIO, TEXAS 78216
TEL (210) 494-8004
FAX (210) 494-8286
T.B.P.E. FIRM # 1741

TALLEY ROAD

CROSS SECTIONS

SHEET 29 OF 88

PROJECT NUMBER:		SHEET NO.	
		577	
DESIGNED BY:	CP&Y	ROADWAY/HIGHWAY:	
CHECKED BY:	CP&Y	TALLEY ROAD	
DRAWN BY:	CP&Y	STATE	COUNTY
CHECKED BY:	CP&Y	TEXAS	BEXAR

cpybw_ANSIB.tbl
cpypdf_ANSIB.pltcfg
pw:/Active Projects/BEXA14048.01/8.00 Plans and Drawings/8.10 Base Files/14048RDxsec_90.dgn
2/23/2017 4:31:09 PM mberan
pw:/Active Projects/BEXA14048.01/8.00 Plans and Drawings/8.10 Base Files/14048RDxsec_90.dgn

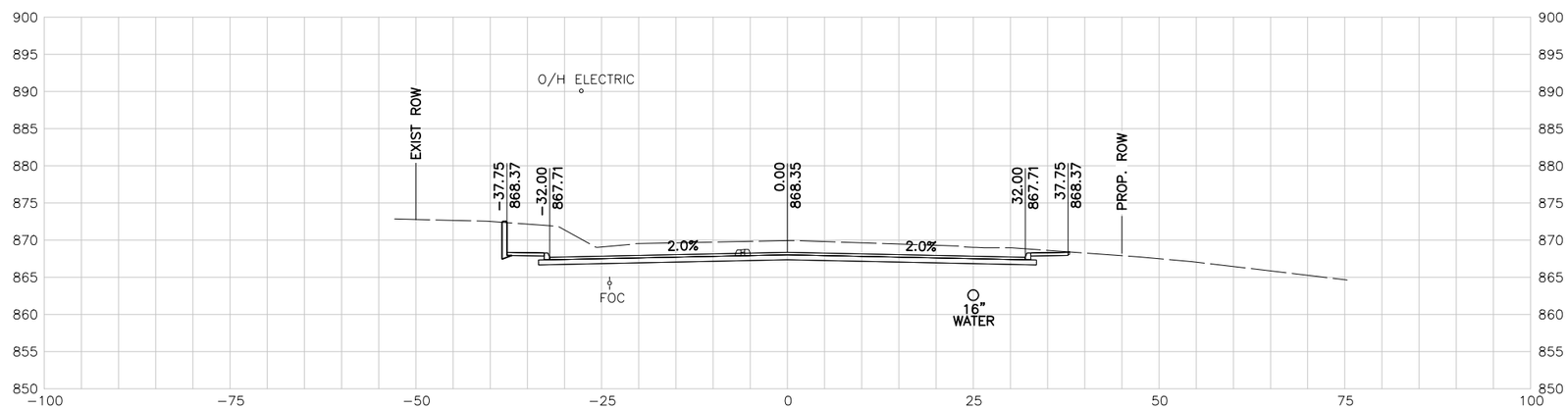

145+00.00 R1

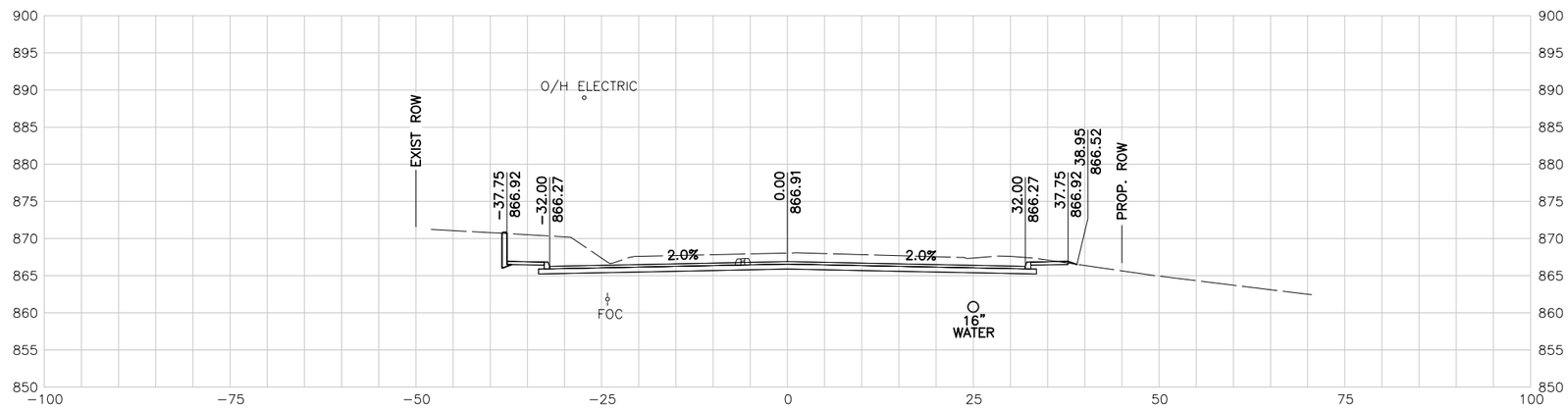

144+50.00 R1

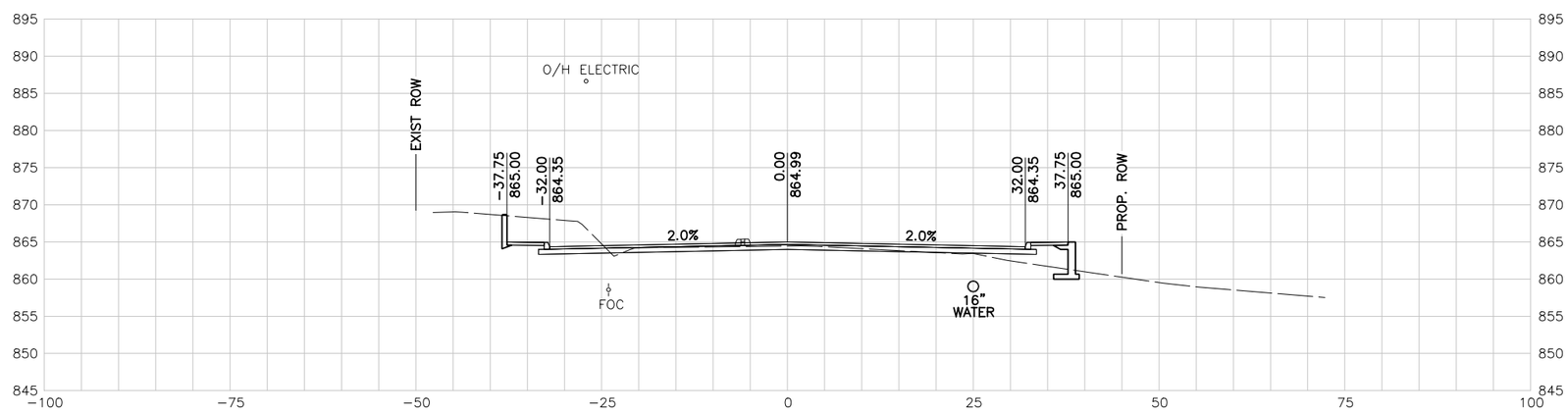

144+00.00 R1

10 5 0 10 20
SCALE FEET

NOTES:

1. UTILITY LOCATIONS ARE APPROXIMATE AND ARE SHOWN FROM THE BEST INFORMATION PROVIDED BY THE UTILITY COMPANIES AT THE TIME PLANS WERE PREPARED.
2. CONTRACTOR SHALL NOTIFY UTILITY COMPANIES AND LOCATE UTILITIES A MINIMUM OF 48 HOURS BEFORE BEGINNING WORK IN AREA.
3. CALL THE TEXAS STATE WIDE ONE CALL LOCATOR NUMBER 1-800-344-8377 48 HOURS BEFORE BEGINNING ANY EXCAVATION.

   DUE TO FEDERAL REGULATION TITLE 49, PART 192.181, CPS MUST MAINTAIN ACCESS TO GAS VALVES AT ALL TIMES. THE CONTRACTOR MUST PROTECT AND WORK AROUND ANY GAS VALVES THAT ARE IN THE PROJECT AREA.

   THE CONTRACTOR WILL BE RESPONSIBLE FOR PROTECTING ALL EXISTING UTILITIES ADJACENT TO THE WORK AREA.
4. SEE CROSS STREET PLAN AND PROFILE SHEETS AND INTERSECTION LAYOUT SHEETS FOR ADDITIONAL INFORMATION AT THE CROSS STREET.
5. SEE DRIVEWAY SUMMARY FOR ADDITIONAL INFORMATION PERTAINING TO DRIVEWAYS.

PRELIMINARY

90% SUBMITTAL
FOR INTERIM REVIEW ONLY
NOT FOR CONSTRUCTION, BIDDING, OR PERMIT PURPOSES.

CP&Y

ENGINEER JAIME AGUILAR
P.E. No. 87606 DATE 2/23/2017

BEXAR COUNTY
PUBLIC WORKS DEPARTMENT

NO	DATE	DESCRIPTION	DWG	CHK

REVISIONS

CP&Y
12500 SAN PEDRO AVENUE, SUITE 450
SAN ANTONIO, TEXAS 78216
TEL (210) 494-8004
FAX (210) 494-8286
T.B.P.E. FIRM # 1741

TALLEY ROAD

CROSS SECTIONS

SHEET 30 OF 88

PROJECT NUMBER:		SHEET NO.	
		578	
DESIGNED BY:	CP&Y	ROADWAY/HIGHWAY:	
CHECKED BY:	CP&Y	TALLEY ROAD	
DRAWN BY:	CP&Y	STATE	COUNTY
CHECKED BY:	CP&Y	TEXAS	BEXAR

cpybw_ANSIB.tbl
cpypdf_ANSIB.pltcfg
pw:/Active Projects/BEXA14048.01/8.00 Plans and Drawings/8.10 Base Files/14048RDxsec_90.dgn
2/23/2017 4:31:10 PM mberan
pw:/Active Projects/BEXA14048.01/8.00 Plans and Drawings/8.10 Base Files/14048RDxsec_90.dgn

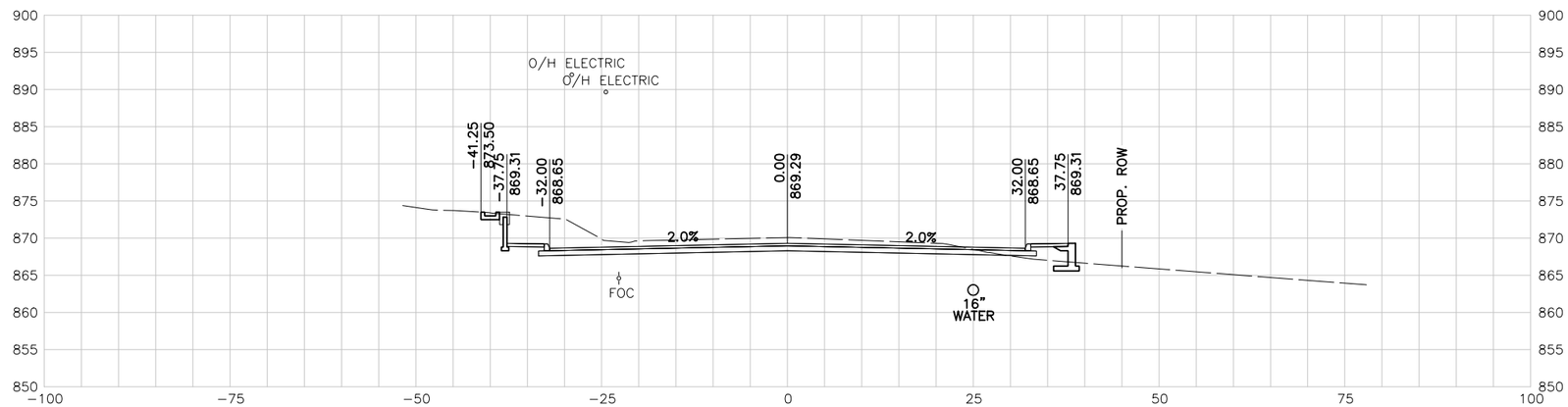

146+50.00 R1

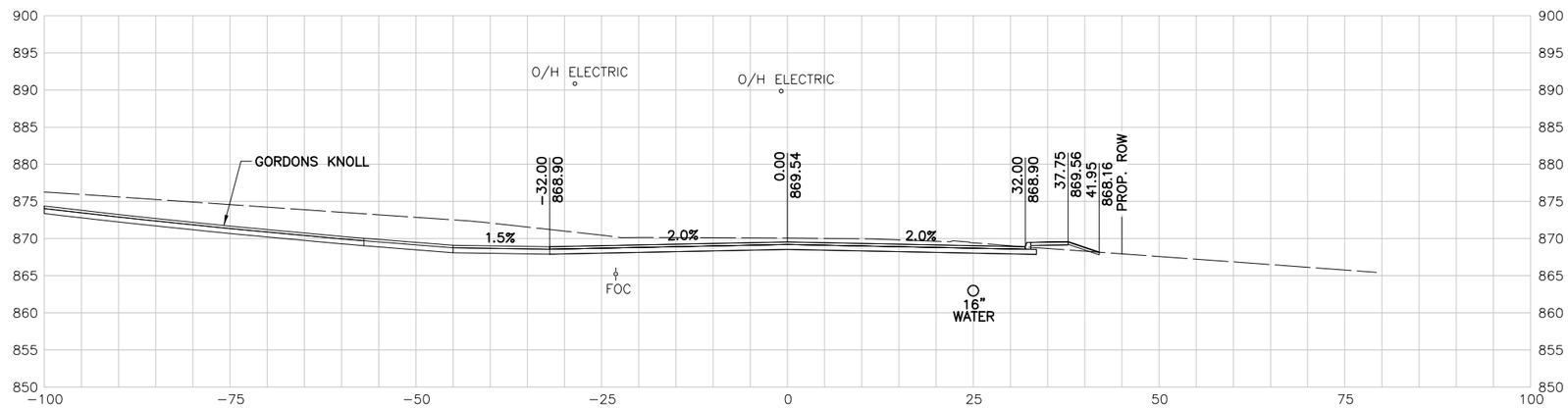

146+00.00 R1

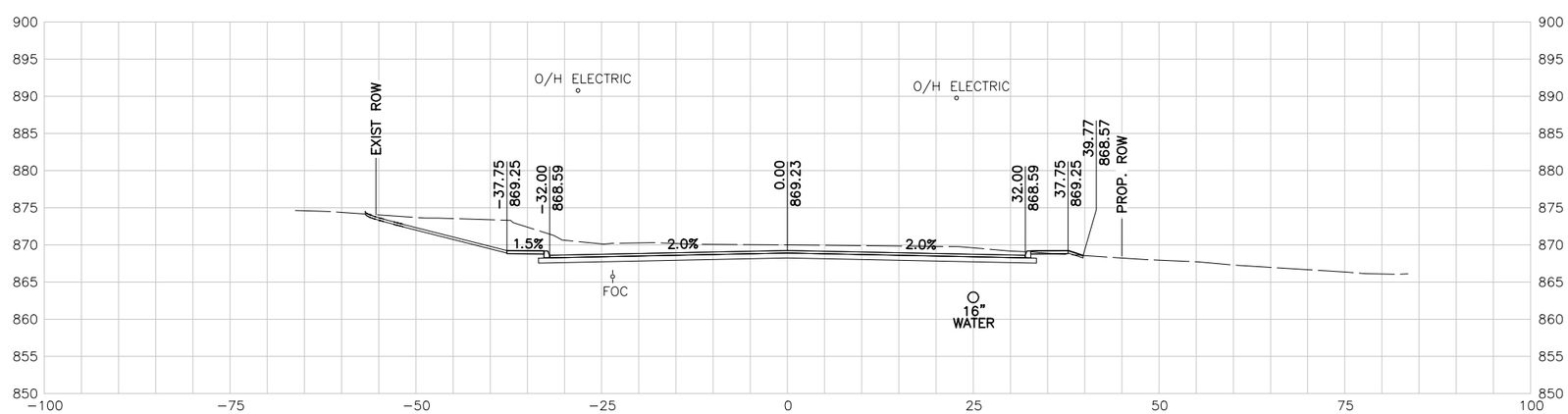

145+50.00 R1

10 5 0 10 20
SCALE FEET

NOTES:

1. UTILITY LOCATIONS ARE APPROXIMATE AND ARE SHOWN FROM THE BEST INFORMATION PROVIDED BY THE UTILITY COMPANIES AT THE TIME PLANS WERE PREPARED.
2. CONTRACTOR SHALL NOTIFY UTILITY COMPANIES AND LOCATE UTILITIES A MINIMUM OF 48 HOURS BEFORE BEGINNING WORK IN AREA.
3. CALL THE TEXAS STATE WIDE ONE CALL LOCATOR NUMBER 1-800-344-8377 48 HOURS BEFORE BEGINNING ANY EXCAVATION.

   DUE TO FEDERAL REGULATION TITLE 49, PART 192.181, CPS MUST MAINTAIN ACCESS TO GAS VALVES AT ALL TIMES. THE CONTRACTOR MUST PROTECT AND WORK AROUND ANY GAS VALVES THAT ARE IN THE PROJECT AREA.

   THE CONTRACTOR WILL BE RESPONSIBLE FOR PROTECTING ALL EXISTING UTILITIES ADJACENT TO THE WORK AREA.
4. SEE CROSS STREET PLAN AND PROFILE SHEETS AND INTERSECTION LAYOUT SHEETS FOR ADDITIONAL INFORMATION AT THE CROSS STREET.
5. SEE DRIVEWAY SUMMARY FOR ADDITIONAL INFORMATION PERTAINING TO DRIVEWAYS.

PRELIMINARY

90% SUBMITTAL
FOR INTERIM REVIEW ONLY
NOT FOR CONSTRUCTION, BIDDING, OR PERMIT PURPOSES.

CP&Y

ENGINEER JAIME AGUILAR
P.E. No. 87606 DATE 2/23/2017

BEXAR COUNTY
PUBLIC WORKS DEPARTMENT

NO	DATE	DESCRIPTION	DWG	CHK

REVISIONS

CP&Y
12500 SAN PEDRO AVENUE, SUITE 450
SAN ANTONIO, TEXAS 78216
TEL (210) 494-8004
FAX (210) 494-8286
T.B.P.E. FIRM # 1741

TALLEY ROAD

CROSS SECTIONS

SHEET 31 OF 88

PROJECT NUMBER:		SHEET NO.
		579
DESIGNED BY: CP&Y	ROADWAY/HIGHWAY:	
CHECKED BY: CP&Y	TALLEY ROAD	
DRAWN BY: CP&Y	STATE	COUNTY
CHECKED BY: CP&Y	TEXAS	BEXAR

2/23/2017 4:31:10 PM mberon cpybw_ANSIB.tbl cpypdf_ANSIB.pltcfg pw:/Active Projects/BEXA14048.01/8.00 Plans and Drawings/8.10 Base Files/14048RDxsec_90.dgn

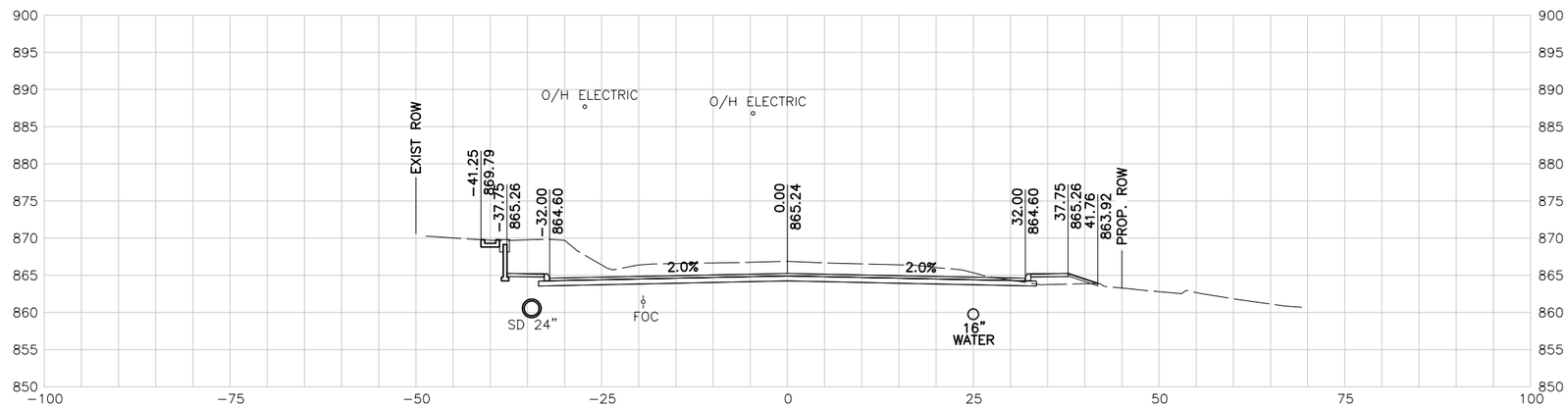

148+00.00 R1

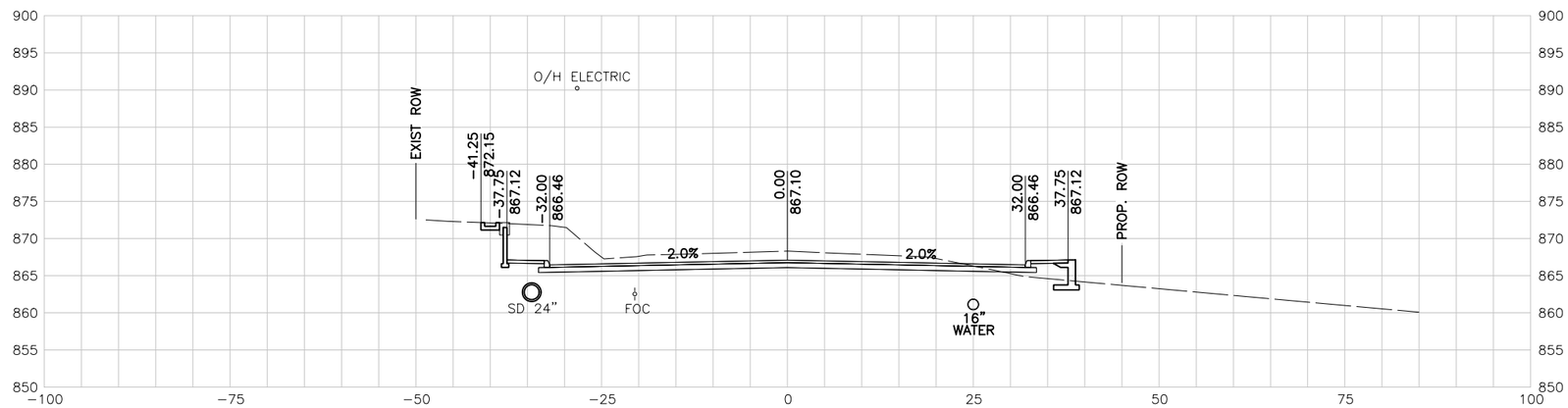

147+50.00 R1

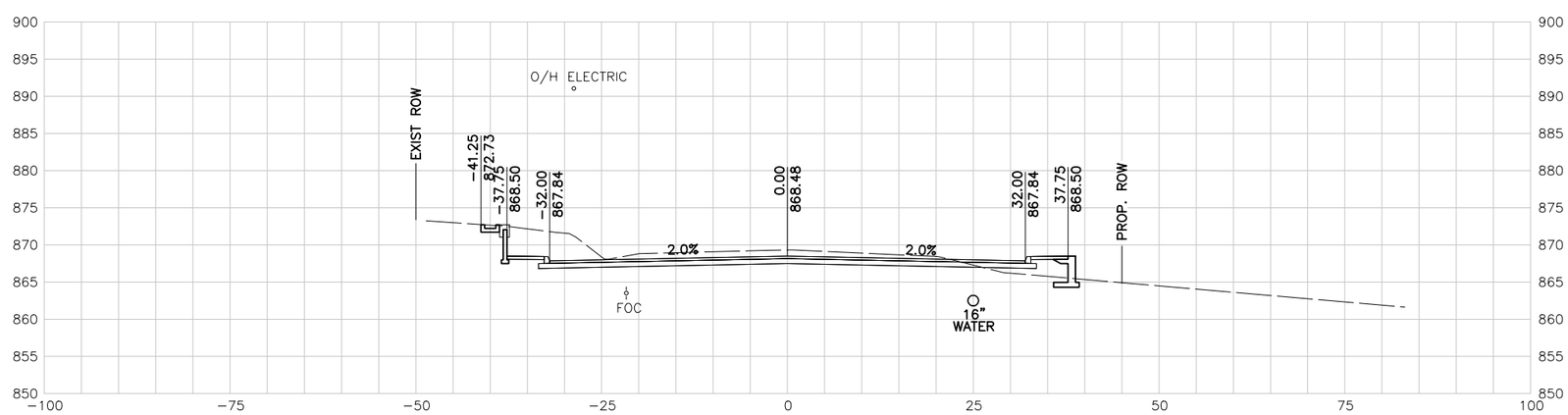

147+00.00 R1

10 5 0 10 20
SCALE FEET

NOTES:

1. UTILITY LOCATIONS ARE APPROXIMATE AND ARE SHOWN FROM THE BEST INFORMATION PROVIDED BY THE UTILITY COMPANIES AT THE TIME PLANS WERE PREPARED.
2. CONTRACTOR SHALL NOTIFY UTILITY COMPANIES AND LOCATE UTILITIES A MINIMUM OF 48 HOURS BEFORE BEGINNING WORK IN AREA.
3. CALL THE TEXAS STATE WIDE ONE CALL LOCATOR NUMBER 1-800-344-8377 48 HOURS BEFORE BEGINNING ANY EXCAVATION.

   DUE TO FEDERAL REGULATION TITLE 49, PART 192.181, CPS MUST MAINTAIN ACCESS TO GAS VALVES AT ALL TIMES. THE CONTRACTOR MUST PROTECT AND WORK AROUND ANY GAS VALVES THAT ARE IN THE PROJECT AREA.

   THE CONTRACTOR WILL BE RESPONSIBLE FOR PROTECTING ALL EXISTING UTILITIES ADJACENT TO THE WORK AREA.
4. SEE CROSS STREET PLAN AND PROFILE SHEETS AND INTERSECTION LAYOUT SHEETS FOR ADDITIONAL INFORMATION AT THE CROSS STREET.
5. SEE DRIVEWAY SUMMARY FOR ADDITIONAL INFORMATION PERTAINING TO DRIVEWAYS.

PRELIMINARY

90% SUBMITTAL
FOR INTERIM REVIEW ONLY
NOT FOR CONSTRUCTION, BIDDING, OR PERMIT PURPOSES.

CP&Y

ENGINEER JAIME AGUILAR
P.E. No. 87606 DATE 2/23/2017

BEXAR COUNTY
PUBLIC WORKS DEPARTMENT

NO	DATE	DESCRIPTION	DWG	CHK

REVISIONS

CP&Y
12500 SAN PEDRO AVENUE, SUITE 450
SAN ANTONIO, TEXAS 78216
TEL (210) 494-8004
FAX (210) 494-8286
T.B.P.E. FIRM # 1741

TALLEY ROAD

CROSS SECTIONS

SHEET 32 OF 88

PROJECT NUMBER:		SHEET NO.
		580
DESIGNED BY: CP&Y	ROADWAY/HIGHWAY:	
CHECKED BY: CP&Y	TALLEY ROAD	
DRAWN BY: CP&Y	STATE	COUNTY
CHECKED BY: CP&Y	TEXAS	BEXAR

2/23/2017 4:31:11 PM mberon
cpybw_ANSIB.tbl
cpypdf_ANSIB.pltcfg
pw:/Active Projects/BEXA14048.01/8.00 Plans and Drawings/8.10 Base Files/14048RDxsec_90.dgn

pw:/Active Projects/BEXA14048.01/8.00 Plans and Drawings/8.10 Base Files/14048RDxsec_90.dgn

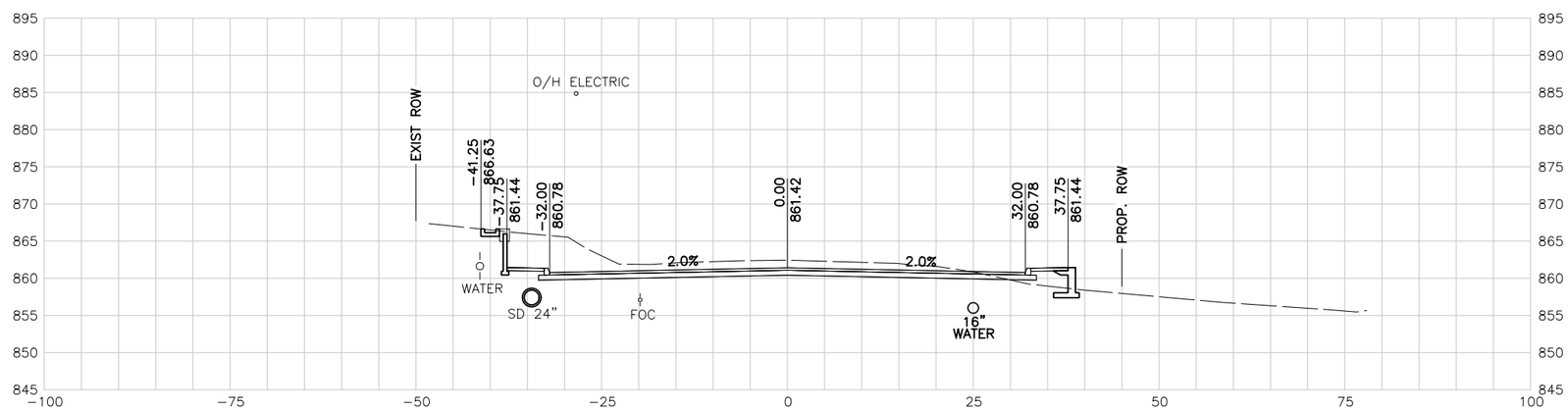

149+50.00 R1

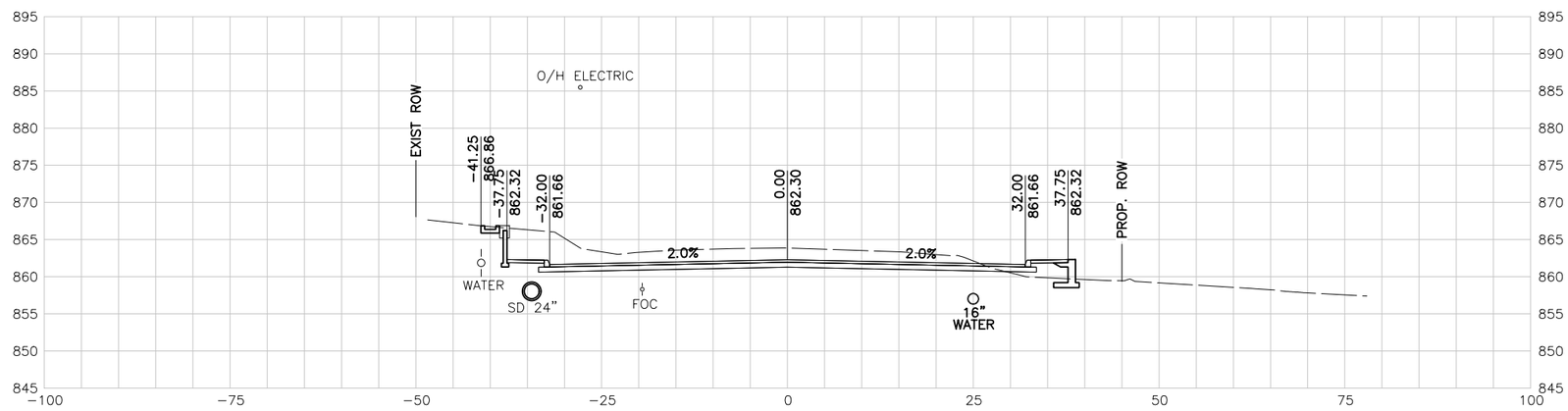

149+00.00 R1

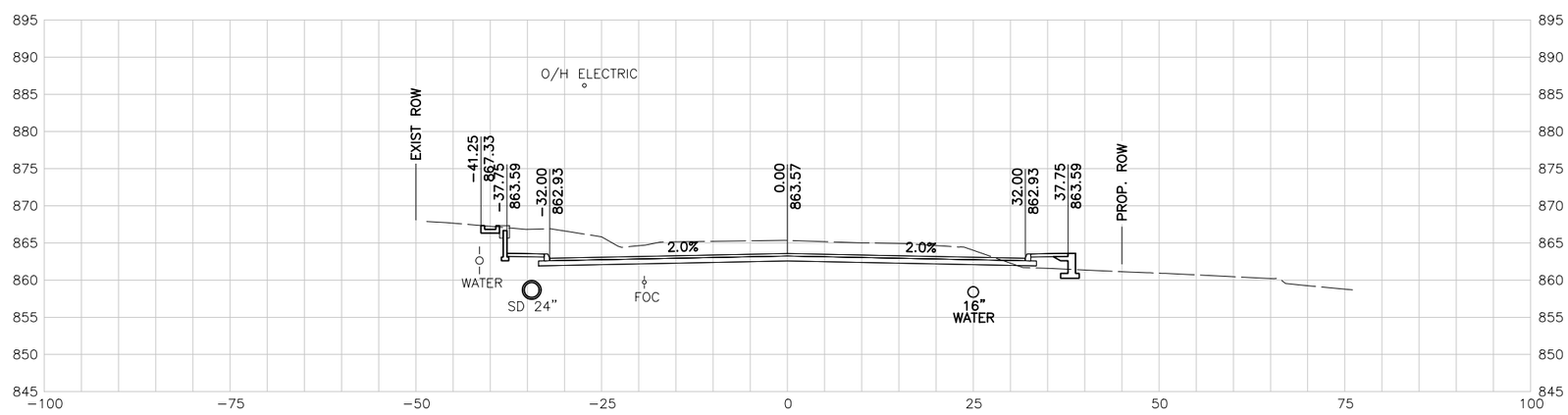

148+50.00 R1

10 5 0 10 20
SCALE FEET

NOTES:

1. UTILITY LOCATIONS ARE APPROXIMATE AND ARE SHOWN FROM THE BEST INFORMATION PROVIDED BY THE UTILITY COMPANIES AT THE TIME PLANS WERE PREPARED.
2. CONTRACTOR SHALL NOTIFY UTILITY COMPANIES AND LOCATE UTILITIES A MINIMUM OF 48 HOURS BEFORE BEGINNING WORK IN AREA.
3. CALL THE TEXAS STATE WIDE ONE CALL LOCATOR NUMBER 1-800-344-8377 48 HOURS BEFORE BEGINNING ANY EXCAVATION.

   DUE TO FEDERAL REGULATION TITLE 49, PART 192.181, CPS MUST MAINTAIN ACCESS TO GAS VALVES AT ALL TIMES. THE CONTRACTOR MUST PROTECT AND WORK AROUND ANY GAS VALVES THAT ARE IN THE PROJECT AREA.

   THE CONTRACTOR WILL BE RESPONSIBLE FOR PROTECTING ALL EXISTING UTILITIES ADJACENT TO THE WORK AREA.
4. SEE CROSS STREET PLAN AND PROFILE SHEETS AND INTERSECTION LAYOUT SHEETS FOR ADDITIONAL INFORMATION AT THE CROSS STREET.
5. SEE DRIVEWAY SUMMARY FOR ADDITIONAL INFORMATION PERTAINING TO DRIVEWAYS.

PRELIMINARY

90% SUBMITTAL
FOR INTERIM REVIEW ONLY
NOT FOR CONSTRUCTION, BIDDING, OR PERMIT PURPOSES.

CP&Y

ENGINEER JAIME AGUILAR
P.E. No. 87606 DATE 2/23/2017

BEXAR COUNTY
PUBLIC WORKS DEPARTMENT

NO	DATE	DESCRIPTION	DWG	CHK

REVISIONS

CP&Y
12500 SAN PEDRO AVENUE, SUITE 450
SAN ANTONIO, TEXAS 78216
TEL (210) 494-8004
FAX (210) 494-8286
T.B.P.E. FIRM # 1741

TALLEY ROAD

CROSS SECTIONS

SHEET 33 OF 88

PROJECT NUMBER:		SHEET NO.	
		581	
DESIGNED BY:	CP&Y	ROADWAY/HIGHWAY:	
CHECKED BY:	CP&Y	TALLEY ROAD	
DRAWN BY:	CP&Y	STATE	COUNTY
CHECKED BY:	CP&Y	TEXAS	BEXAR

cpybw_ANSIB.tbl
cpypdf_ANSIB.pltcfg
pw:/Active Projects/BEXA14048.01/8.00 Plans and Drawings/8.10 Base Files/14048RDxsec_90.dgn
2/23/2017 4:31:11 PM mberan
pw:/Active Projects/BEXA14048.01/8.00 Plans and Drawings/8.10 Base Files/14048RDxsec_90.dgn

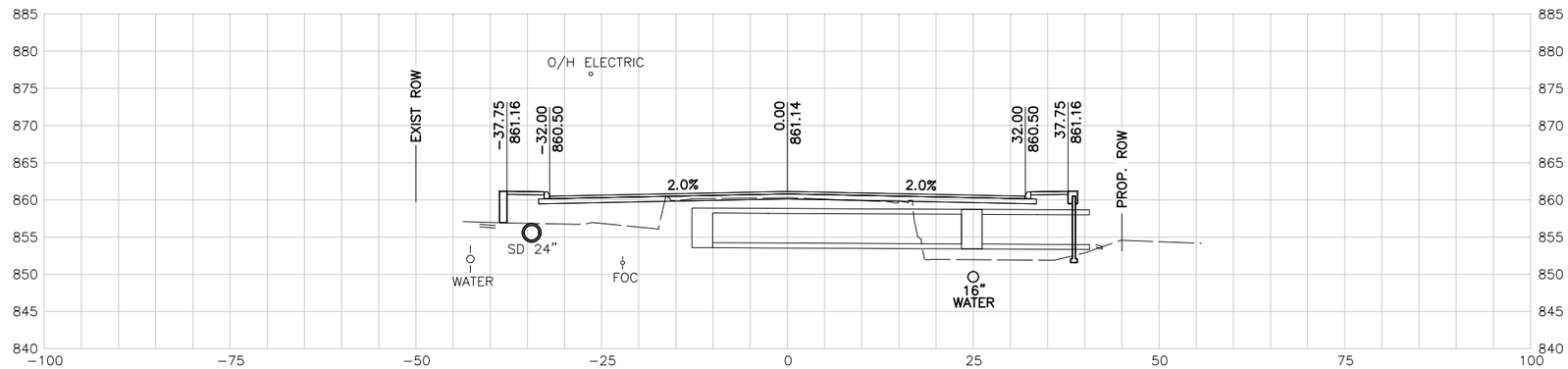

151+00.00 R1

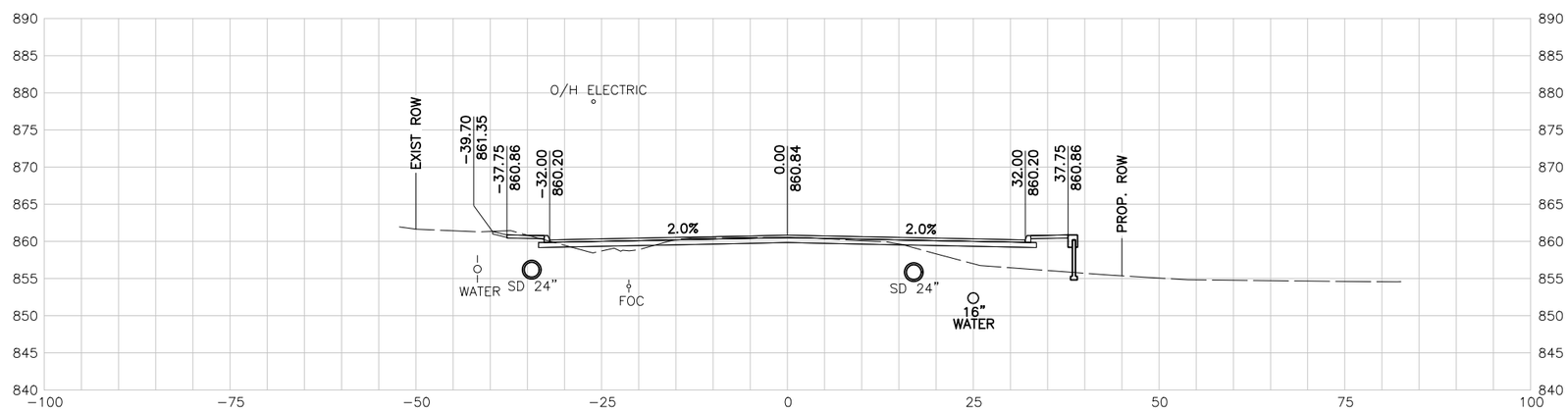

150+50.00 R1

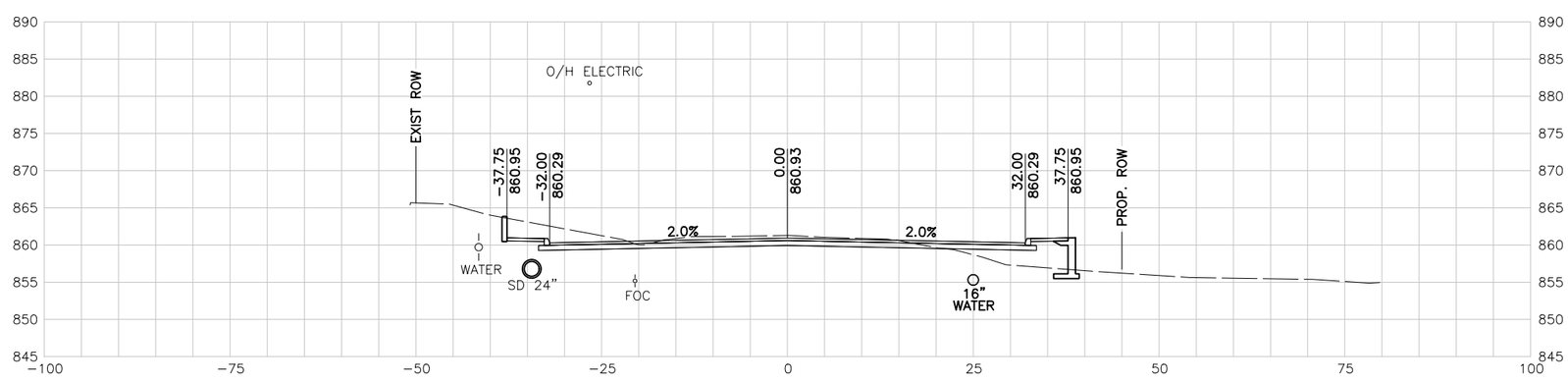

150+00.00 R1

10 5 0 10 20
SCALE FEET

NOTES:

1. UTILITY LOCATIONS ARE APPROXIMATE AND ARE SHOWN FROM THE BEST INFORMATION PROVIDED BY THE UTILITY COMPANIES AT THE TIME PLANS WERE PREPARED.
2. CONTRACTOR SHALL NOTIFY UTILITY COMPANIES AND LOCATE UTILITIES A MINIMUM OF 48 HOURS BEFORE BEGINNING WORK IN AREA.
3. CALL THE TEXAS STATE WIDE ONE CALL LOCATOR NUMBER 1-800-344-8377 48 HOURS BEFORE BEGINNING ANY EXCAVATION.

   DUE TO FEDERAL REGULATION TITLE 49, PART 192.181, CPS MUST MAINTAIN ACCESS TO GAS VALVES AT ALL TIMES. THE CONTRACTOR MUST PROTECT AND WORK AROUND ANY GAS VALVES THAT ARE IN THE PROJECT AREA.

   THE CONTRACTOR WILL BE RESPONSIBLE FOR PROTECTING ALL EXISTING UTILITIES ADJACENT TO THE WORK AREA.
4. SEE CROSS STREET PLAN AND PROFILE SHEETS AND INTERSECTION LAYOUT SHEETS FOR ADDITIONAL INFORMATION AT THE CROSS STREET.
5. SEE DRIVEWAY SUMMARY FOR ADDITIONAL INFORMATION PERTAINING TO DRIVEWAYS.

PRELIMINARY

90% SUBMITTAL
FOR INTERIM REVIEW ONLY
NOT FOR CONSTRUCTION, BIDDING, OR PERMIT PURPOSES.

CP&Y

ENGINEER JAIME AGUILAR
P.E. No. 87606 DATE 2/23/2017

BEXAR COUNTY
PUBLIC WORKS DEPARTMENT

NO	DATE	DESCRIPTION	DWG	CHK

REVISIONS

CP&Y
12500 SAN PEDRO AVENUE, SUITE 450
SAN ANTONIO, TEXAS 78216
TEL (210) 494-8004
FAX (210) 494-8286
T.B.P.E. FIRM # 1741

TALLEY ROAD

CROSS SECTIONS

SHEET 34 OF 88

PROJECT NUMBER:		SHEET NO.	
		582	
DESIGNED BY:	CP&Y	ROADWAY/HIGHWAY:	
CHECKED BY:	CP&Y	TALLEY ROAD	
DRAWN BY:	CP&Y	STATE	COUNTY
CHECKED BY:	CP&Y	TEXAS	BEXAR

cpybw_ANSIB.tbl
cpypdf_ANSIB.pltcfg
pw:/Active Projects/BEXA14048.01/8.00 Plans and Drawings/8.10 Base Files/14048RDxsec_90.dgn
2/23/2017 4:31:12 PM mberon
pw:/Active Projects/BEXA14048.01/8.00 Plans and Drawings/8.10 Base Files/14048RDxsec_90.dgn

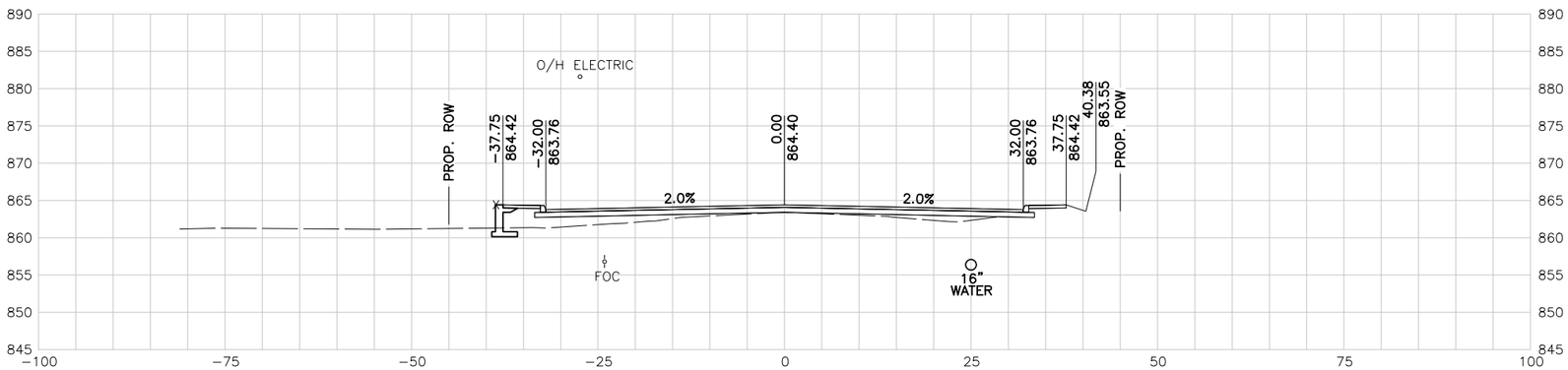

152+50.00 R1

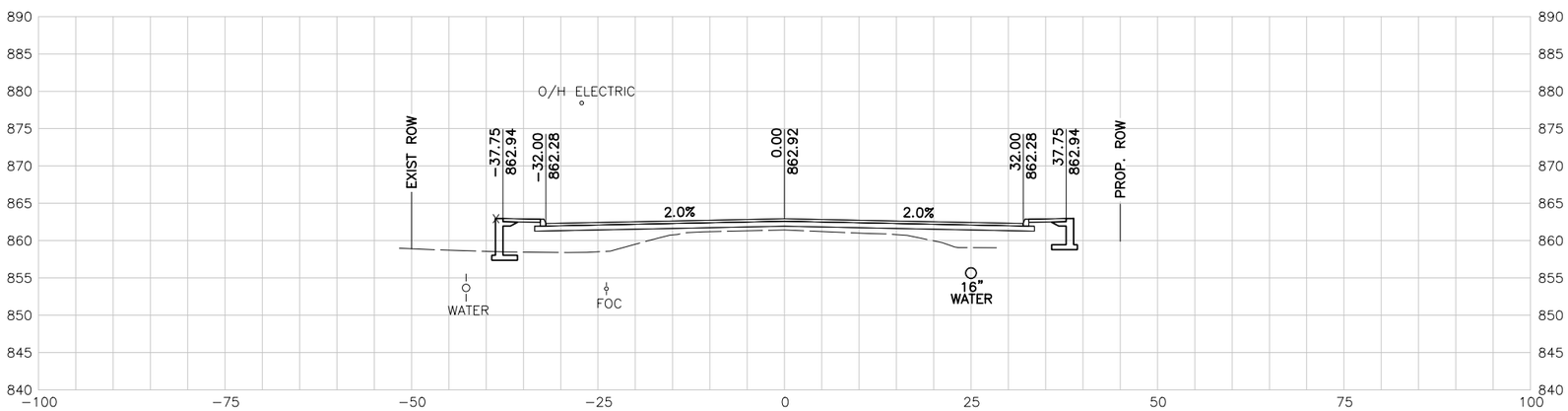

152+00.00 R1

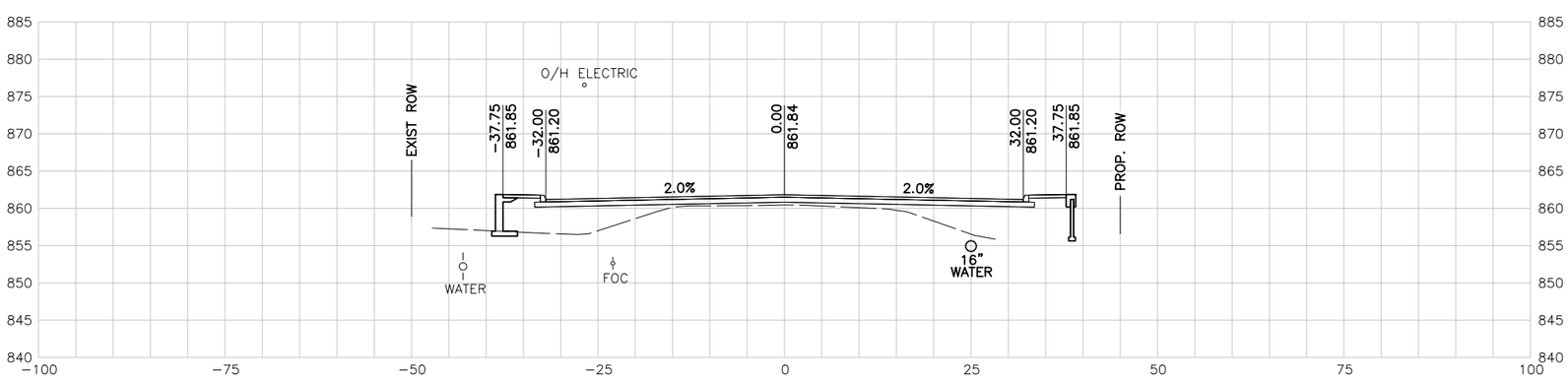

151+50.00 R1

10 5 0 10 20
SCALE FEET

NOTES:

1. UTILITY LOCATIONS ARE APPROXIMATE AND ARE SHOWN FROM THE BEST INFORMATION PROVIDED BY THE UTILITY COMPANIES AT THE TIME PLANS WERE PREPARED.
2. CONTRACTOR SHALL NOTIFY UTILITY COMPANIES AND LOCATE UTILITIES A MINIMUM OF 48 HOURS BEFORE BEGINNING WORK IN AREA.
3. CALL THE TEXAS STATE WIDE ONE CALL LOCATOR NUMBER 1-800-344-8377 48 HOURS BEFORE BEGINNING ANY EXCAVATION.

   DUE TO FEDERAL REGULATION TITLE 49, PART 192.181, CPS MUST MAINTAIN ACCESS TO GAS VALVES AT ALL TIMES. THE CONTRACTOR MUST PROTECT AND WORK AROUND ANY GAS VALVES THAT ARE IN THE PROJECT AREA.

   THE CONTRACTOR WILL BE RESPONSIBLE FOR PROTECTING ALL EXISTING UTILITIES ADJACENT TO THE WORK AREA.
4. SEE CROSS STREET PLAN AND PROFILE SHEETS AND INTERSECTION LAYOUT SHEETS FOR ADDITIONAL INFORMATION AT THE CROSS STREET.
5. SEE DRIVEWAY SUMMARY FOR ADDITIONAL INFORMATION PERTAINING TO DRIVEWAYS.

PRELIMINARY

90% SUBMITTAL
FOR INTERIM REVIEW ONLY
NOT FOR CONSTRUCTION, BIDDING, OR PERMIT PURPOSES.

CP&Y

ENGINEER JAIME AGUILAR
P.E. No. 87606 DATE 2/23/2017

BEXAR COUNTY
PUBLIC WORKS DEPARTMENT

NO	DATE	DESCRIPTION	DWG	CHK

REVISIONS

CP&Y
12500 SAN PEDRO AVENUE, SUITE 450
SAN ANTONIO, TEXAS 78216
TEL (210) 494-8004
FAX (210) 494-8286
T.B.P.E. FIRM # 1741

TALLEY ROAD

CROSS SECTIONS

SHEET 35 OF 88

PROJECT NUMBER:		SHEET NO.
		583
DESIGNED BY: CP&Y	ROADWAY/HIGHWAY:	
CHECKED BY: CP&Y	TALLEY ROAD	
DRAWN BY: CP&Y	STATE	COUNTY
CHECKED BY: CP&Y	TEXAS	BEXAR

2/23/2017 4:31:12 PM mberon
cpybw_ANSIB.tbl
cpypdf_ANSIB.pltcfg
pw:/Active Projects/BEXA14048.01/8.00 Plans and Drawings/8.10 Base Files/14048RDxsec_90.dgn

pw:/Active Projects/BEXA14048.01/8.00 Plans and Drawings/8.10 Base Files/14048RDxsec_90.dgn

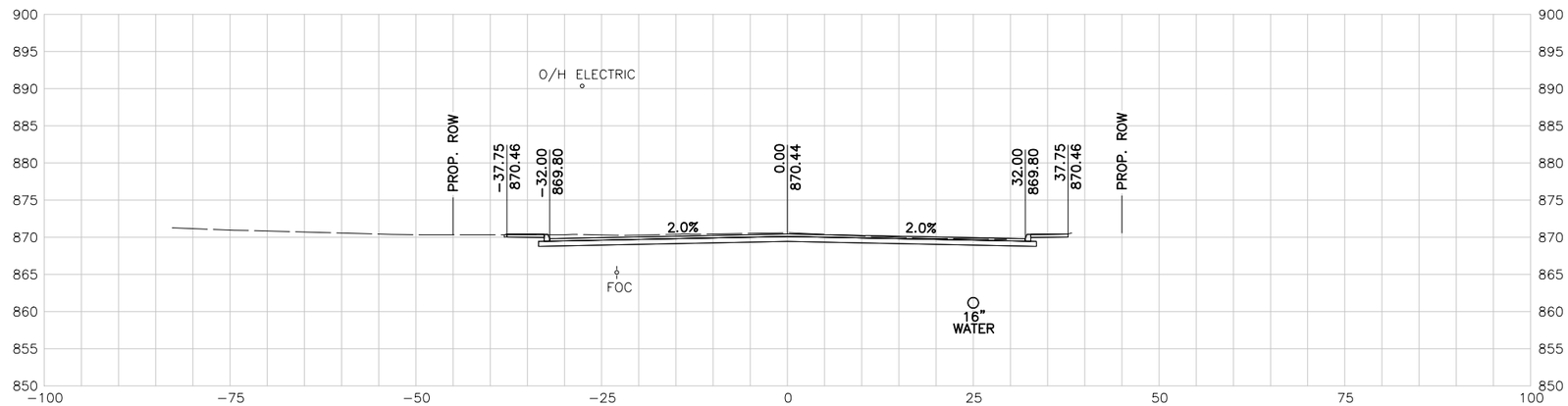

154+00.00 R1

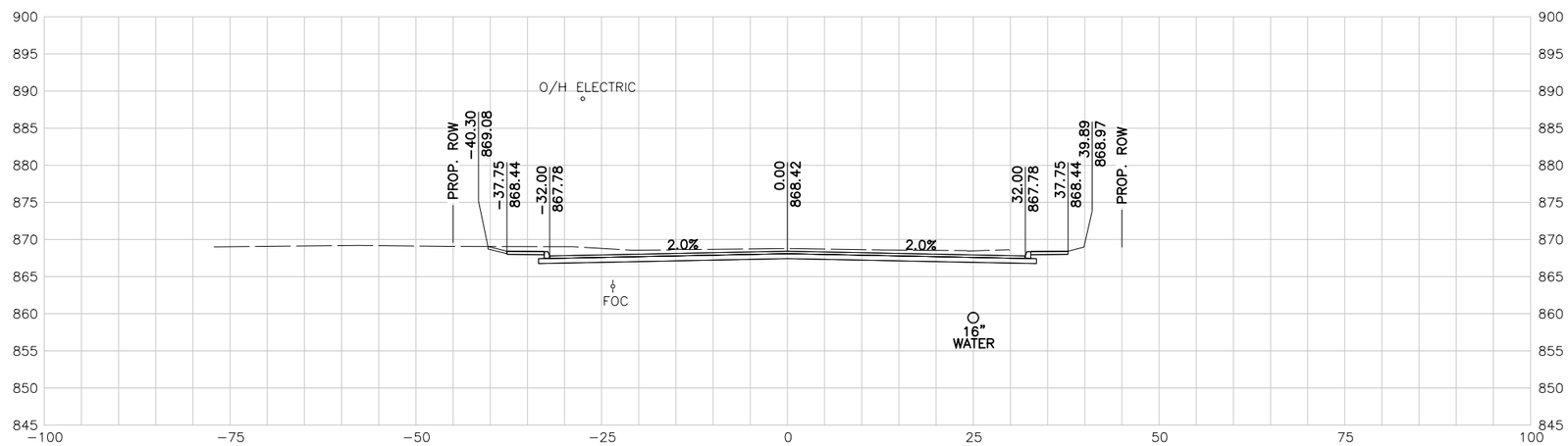

153+50.00 R1

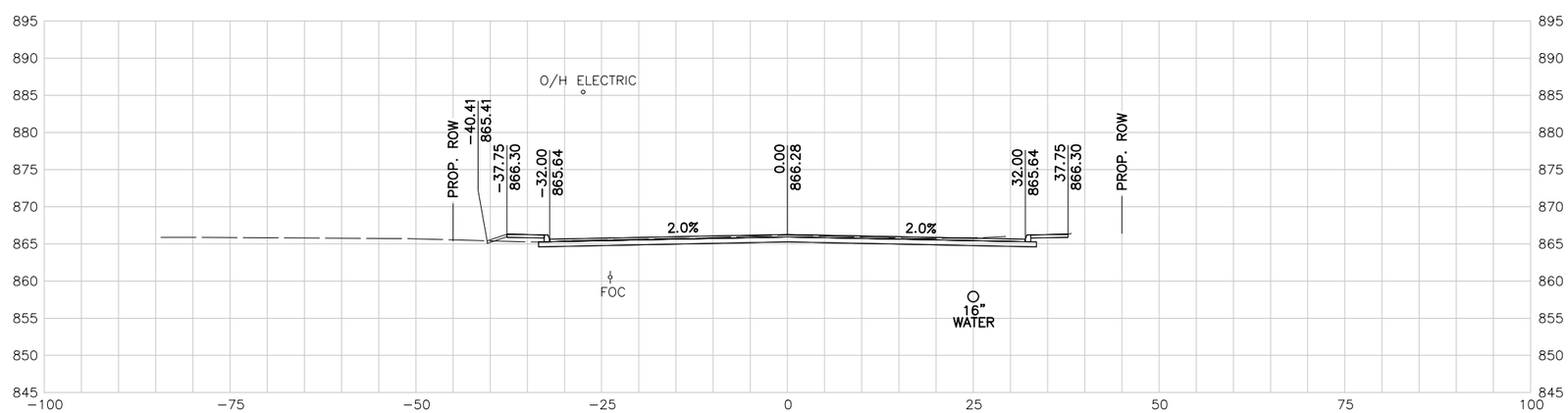

153+00.00 R1

10 5 0 10 20
SCALE FEET

NOTES:

1. UTILITY LOCATIONS ARE APPROXIMATE AND ARE SHOWN FROM THE BEST INFORMATION PROVIDED BY THE UTILITY COMPANIES AT THE TIME PLANS WERE PREPARED.
2. CONTRACTOR SHALL NOTIFY UTILITY COMPANIES AND LOCATE UTILITIES A MINIMUM OF 48 HOURS BEFORE BEGINNING WORK IN AREA.
3. CALL THE TEXAS STATE WIDE ONE CALL LOCATOR NUMBER 1-800-344-8377 48 HOURS BEFORE BEGINNING ANY EXCAVATION.

   DUE TO FEDERAL REGULATION TITLE 49, PART 192.181, CPS MUST MAINTAIN ACCESS TO GAS VALVES AT ALL TIMES. THE CONTRACTOR MUST PROTECT AND WORK AROUND ANY GAS VALVES THAT ARE IN THE PROJECT AREA.

   THE CONTRACTOR WILL BE RESPONSIBLE FOR PROTECTING ALL EXISTING UTILITIES ADJACENT TO THE WORK AREA.
4. SEE CROSS STREET PLAN AND PROFILE SHEETS AND INTERSECTION LAYOUT SHEETS FOR ADDITIONAL INFORMATION AT THE CROSS STREET.
5. SEE DRIVEWAY SUMMARY FOR ADDITIONAL INFORMATION PERTAINING TO DRIVEWAYS.

PRELIMINARY

90% SUBMITTAL
FOR INTERIM REVIEW ONLY
NOT FOR CONSTRUCTION, BIDDING, OR PERMIT PURPOSES.

CP&Y

ENGINEER JAIME AGUILAR
P.E. No. 87606 DATE 2/23/2017

BEXAR COUNTY
PUBLIC WORKS DEPARTMENT

NO	DATE	DESCRIPTION	DWG	CHK

REVISIONS

CP&Y
12500 SAN PEDRO AVENUE, SUITE 450
SAN ANTONIO, TEXAS 78216
TEL (210) 494-8004
FAX (210) 494-8286
T.B.P.E. FIRM # 1741

TALLEY ROAD

CROSS SECTIONS

SHEET 36 OF 88

PROJECT NUMBER:		SHEET NO.	
		584	
DESIGNED BY:	CP&Y	ROADWAY/HIGHWAY:	
CHECKED BY:	CP&Y	TALLEY ROAD	
DRAWN BY:	CP&Y	STATE	COUNTY
CHECKED BY:	CP&Y	TEXAS	BEXAR

cpybw_ANSIB.tbl
cpypdf_ANSIB.pltcfg
pw:/Active Projects/BEXA14048.01/8.00 Plans and Drawings/8.10 Base Files/14048RDxsec_90.dgn
2/23/2017 4:31:13 PM mberon
pw:/Active Projects/BEXA14048.01/8.00 Plans and Drawings/8.10 Base Files/14048RDxsec_90.dgn

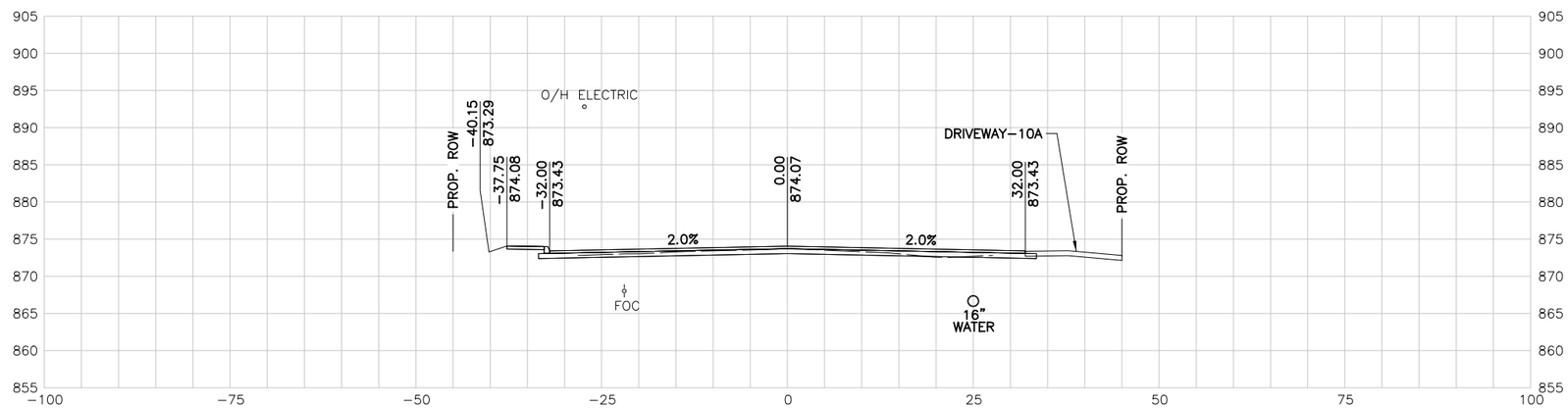

155+50.00 R1

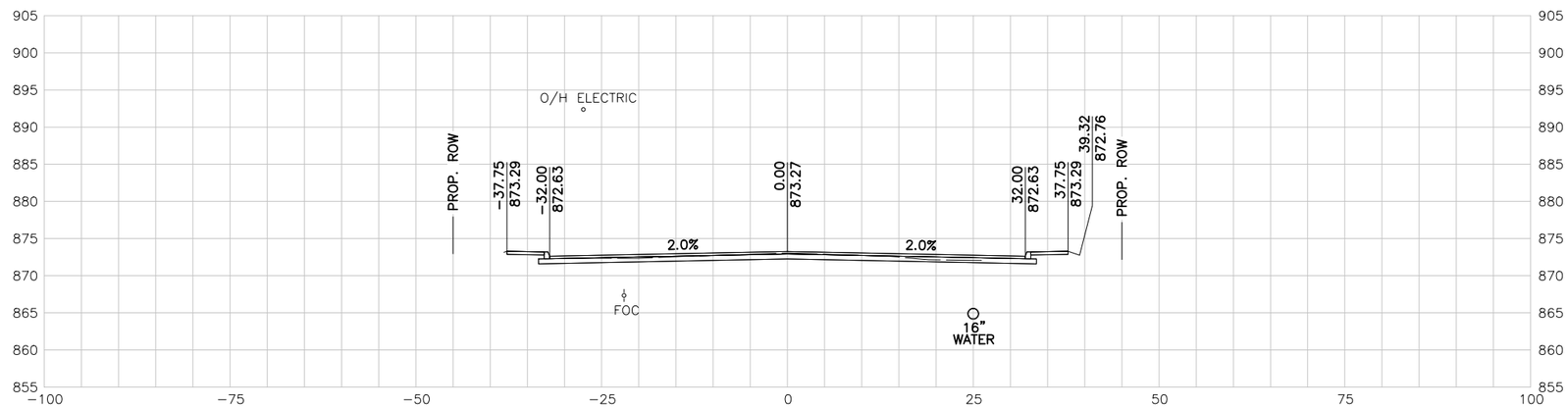

155+00.00 R1

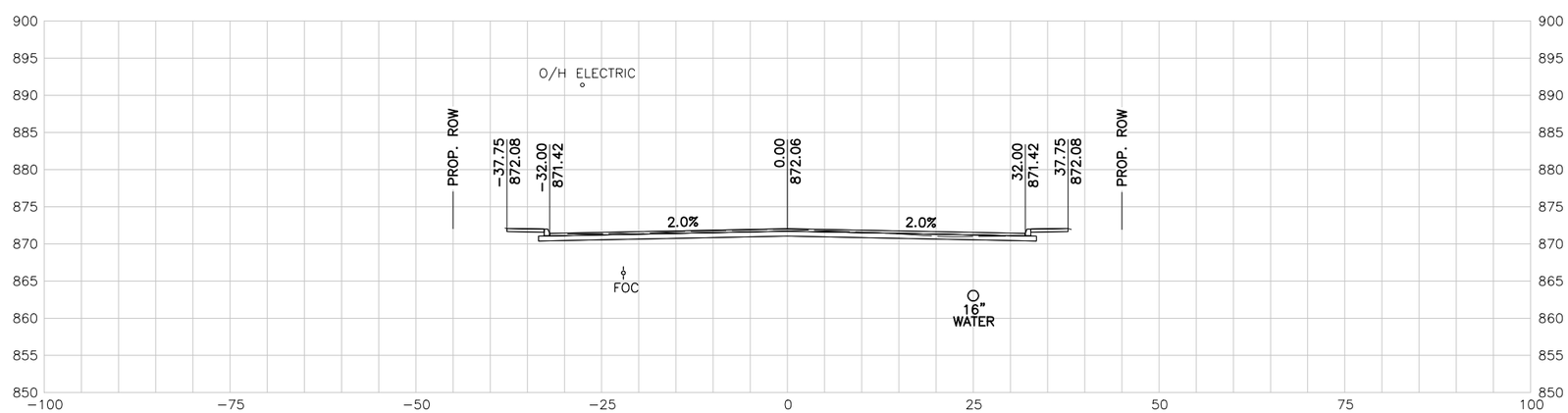

154+50.00 R1

10 5 0 10 20
SCALE FEET

NOTES:

1. UTILITY LOCATIONS ARE APPROXIMATE AND ARE SHOWN FROM THE BEST INFORMATION PROVIDED BY THE UTILITY COMPANIES AT THE TIME PLANS WERE PREPARED.
2. CONTRACTOR SHALL NOTIFY UTILITY COMPANIES AND LOCATE UTILITIES A MINIMUM OF 48 HOURS BEFORE BEGINNING WORK IN AREA.
3. CALL THE TEXAS STATE WIDE ONE CALL LOCATOR NUMBER 1-800-344-8377 48 HOURS BEFORE BEGINNING ANY EXCAVATION.

   DUE TO FEDERAL REGULATION TITLE 49, PART 192.181, CPS MUST MAINTAIN ACCESS TO GAS VALVES AT ALL TIMES. THE CONTRACTOR MUST PROTECT AND WORK AROUND ANY GAS VALVES THAT ARE IN THE PROJECT AREA.

   THE CONTRACTOR WILL BE RESPONSIBLE FOR PROTECTING ALL EXISTING UTILITIES ADJACENT TO THE WORK AREA.
4. SEE CROSS STREET PLAN AND PROFILE SHEETS AND INTERSECTION LAYOUT SHEETS FOR ADDITIONAL INFORMATION AT THE CROSS STREET.
5. SEE DRIVEWAY SUMMARY FOR ADDITIONAL INFORMATION PERTAINING TO DRIVEWAYS.

PRELIMINARY

90% SUBMITTAL
FOR INTERIM REVIEW ONLY
NOT FOR CONSTRUCTION, BIDDING, OR PERMIT PURPOSES.

CP&Y

ENGINEER JAIME AGUILAR
P.E. No. 87606 DATE 2/23/2017

BEXAR COUNTY
PUBLIC WORKS DEPARTMENT

NO	DATE	DESCRIPTION	DWG	CHK

REVISIONS

CP&Y
12500 SAN PEDRO AVENUE, SUITE 450
SAN ANTONIO, TEXAS 78216
TEL (210) 494-8004
FAX (210) 494-8286
T.B.P.E. FIRM # 1741

TALLEY ROAD

CROSS SECTIONS

SHEET 37 OF 88

PROJECT NUMBER:		SHEET NO.	
		585	
DESIGNED BY:	CP&Y	ROADWAY/HIGHWAY:	
CHECKED BY:	CP&Y	TALLEY ROAD	
DRAWN BY:	CP&Y	STATE	COUNTY
CHECKED BY:	CP&Y	TEXAS	BEXAR

cpybw_ANSIB.tbl
cpypdf_ANSIB.pltcfg
pw:/Active Projects/BEXA14048.01/8.00 Plans and Drawings/8.10 Base Files/14048RDxsec_90.dgn
2/23/2017 4:31:13 PM mberon
pw:/Active Projects/BEXA14048.01/8.00 Plans and Drawings/8.10 Base Files/14048RDxsec_90.dgn

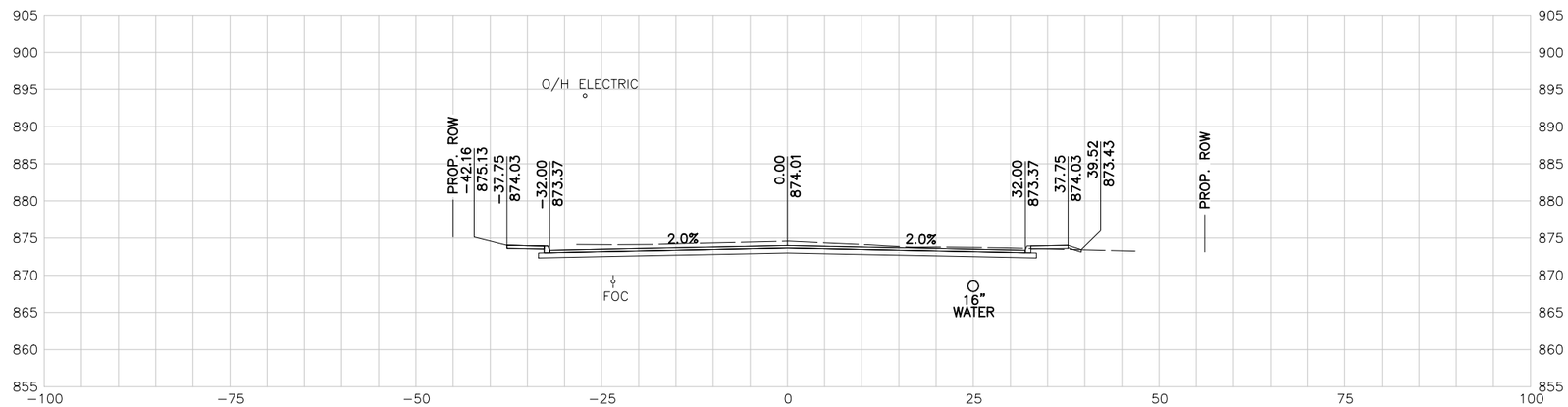

157+00.00 R1

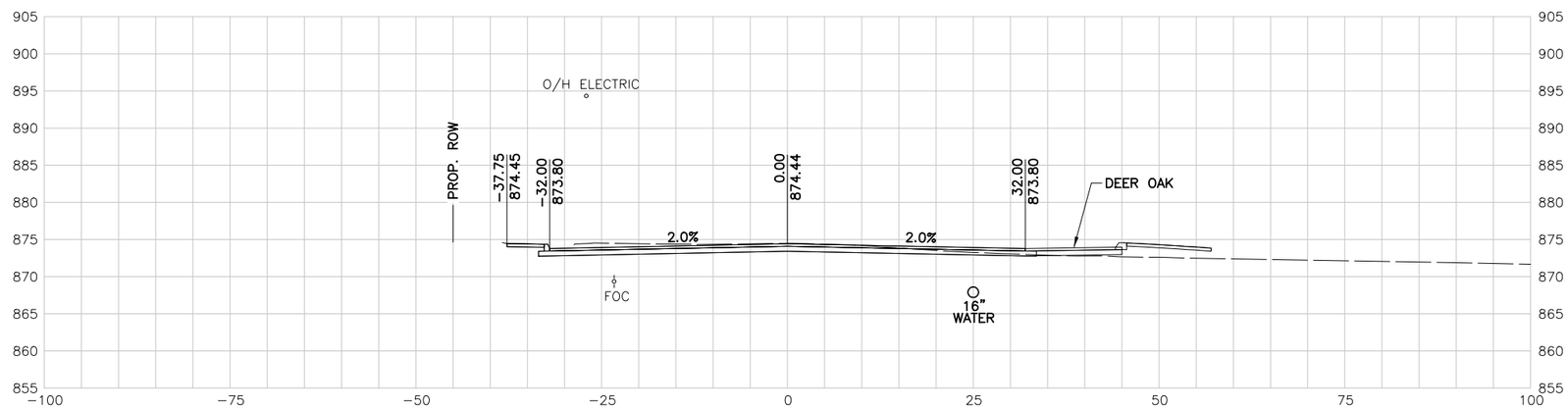

156+50.00 R1

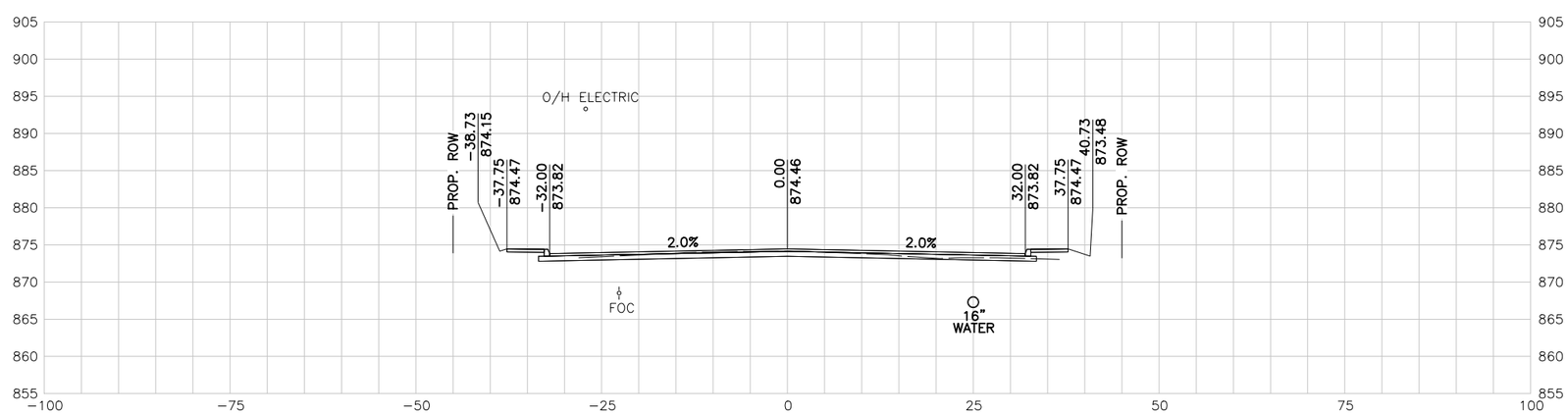

156+00.00 R1

10 5 0 10 20
SCALE FEET

NOTES:

1. UTILITY LOCATIONS ARE APPROXIMATE AND ARE SHOWN FROM THE BEST INFORMATION PROVIDED BY THE UTILITY COMPANIES AT THE TIME PLANS WERE PREPARED.
2. CONTRACTOR SHALL NOTIFY UTILITY COMPANIES AND LOCATE UTILITIES A MINIMUM OF 48 HOURS BEFORE BEGINNING WORK IN AREA.
3. CALL THE TEXAS STATE WIDE ONE CALL LOCATOR NUMBER 1-800-344-8377 48 HOURS BEFORE BEGINNING ANY EXCAVATION.

   DUE TO FEDERAL REGULATION TITLE 49, PART 192.181, CPS MUST MAINTAIN ACCESS TO GAS VALVES AT ALL TIMES. THE CONTRACTOR MUST PROTECT AND WORK AROUND ANY GAS VALVES THAT ARE IN THE PROJECT AREA.

   THE CONTRACTOR WILL BE RESPONSIBLE FOR PROTECTING ALL EXISTING UTILITIES ADJACENT TO THE WORK AREA.
4. SEE CROSS STREET PLAN AND PROFILE SHEETS AND INTERSECTION LAYOUT SHEETS FOR ADDITIONAL INFORMATION AT THE CROSS STREET.
5. SEE DRIVEWAY SUMMARY FOR ADDITIONAL INFORMATION PERTAINING TO DRIVEWAYS.

PRELIMINARY

90% SUBMITTAL
FOR INTERIM REVIEW ONLY
NOT FOR CONSTRUCTION, BIDDING, OR PERMIT PURPOSES.

CP&Y

ENGINEER JAIME AGUILAR
P.E. No. 87606 DATE 2/23/2017

BEXAR COUNTY
PUBLIC WORKS DEPARTMENT

NO	DATE	DESCRIPTION	DWG	CHK

REVISIONS

CP&Y
12500 SAN PEDRO AVENUE, SUITE 450
SAN ANTONIO, TEXAS 78216
TEL (210) 494-8004
FAX (210) 494-8286
T.B.P.E. FIRM # 1741

TALLEY ROAD

CROSS SECTIONS

SHEET 38 OF 88

PROJECT NUMBER:	SHEET NO.
	586

DESIGNED BY:	CP&Y	ROADWAY/HIGHWAY:	
CHECKED BY:	CP&Y	TALLEY ROAD	
DRAWN BY:	CP&Y	STATE	COUNTY
CHECKED BY:	CP&Y	TEXAS	BEXAR

2/23/2017 4:31:14 PM mberon
cpybw_ANSIB.tbl
cpypdf_ANSIB.pltcfg
pw:/Active Projects/BEXA14048.01/8.00 Plans and Drawings/8.10 Base Files/14048RDxsec_90.dgn

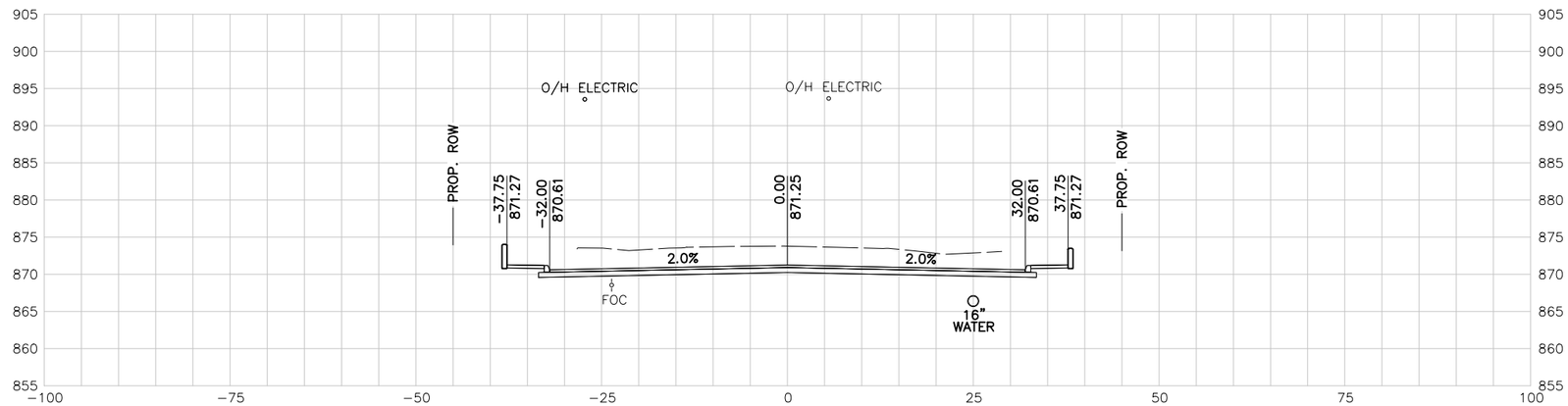

158+50.00 R1

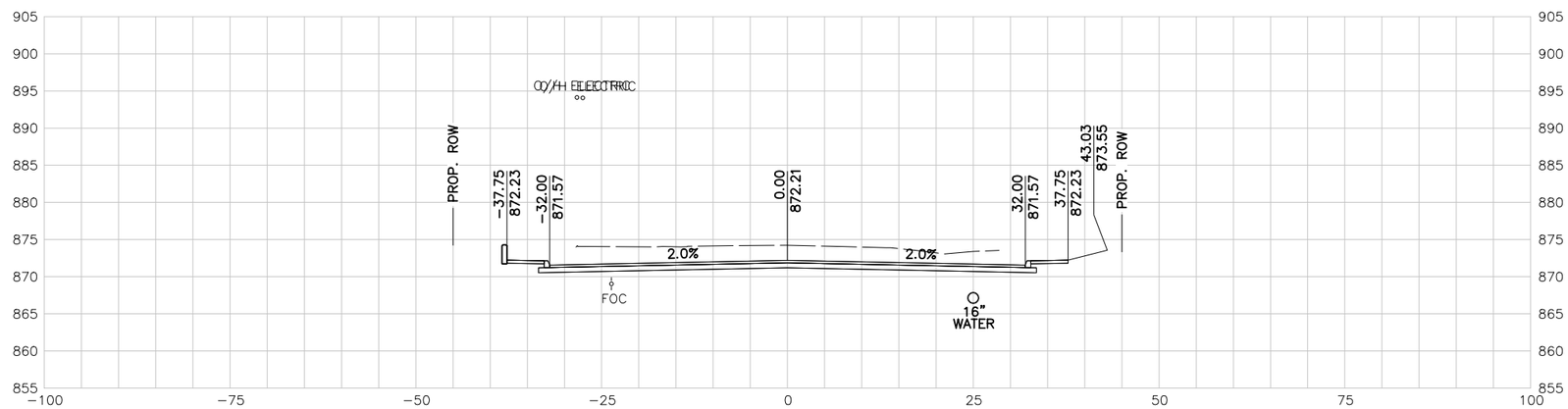

158+00.00 R1

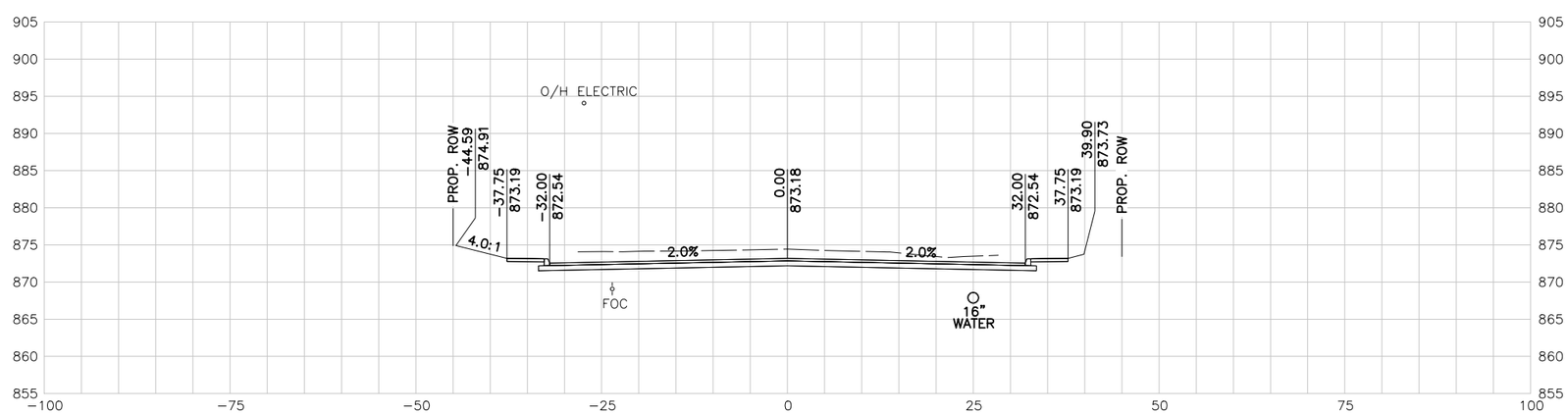

157+50.00 R1

10 5 0 10 20
SCALE FEET

NOTES:

1. UTILITY LOCATIONS ARE APPROXIMATE AND ARE SHOWN FROM THE BEST INFORMATION PROVIDED BY THE UTILITY COMPANIES AT THE TIME PLANS WERE PREPARED.
2. CONTRACTOR SHALL NOTIFY UTILITY COMPANIES AND LOCATE UTILITIES A MINIMUM OF 48 HOURS BEFORE BEGINNING WORK IN AREA.
3. CALL THE TEXAS STATE WIDE ONE CALL LOCATOR NUMBER 1-800-344-8377 48 HOURS BEFORE BEGINNING ANY EXCAVATION.

   DUE TO FEDERAL REGULATION TITLE 49, PART 192.181, CPS MUST MAINTAIN ACCESS TO GAS VALVES AT ALL TIMES. THE CONTRACTOR MUST PROTECT AND WORK AROUND ANY GAS VALVES THAT ARE IN THE PROJECT AREA.

   THE CONTRACTOR WILL BE RESPONSIBLE FOR PROTECTING ALL EXISTING UTILITIES ADJACENT TO THE WORK AREA.
4. SEE CROSS STREET PLAN AND PROFILE SHEETS AND INTERSECTION LAYOUT SHEETS FOR ADDITIONAL INFORMATION AT THE CROSS STREET.
5. SEE DRIVEWAY SUMMARY FOR ADDITIONAL INFORMATION PERTAINING TO DRIVEWAYS.

PRELIMINARY

90% SUBMITTAL
FOR INTERIM REVIEW ONLY
NOT FOR CONSTRUCTION, BIDDING, OR PERMIT PURPOSES.

CP&Y

ENGINEER JAIME AGUILAR
P.E. No. 87606 DATE 2/23/2017

BEXAR COUNTY
PUBLIC WORKS DEPARTMENT

NO	DATE	DESCRIPTION	DWG	CHK

REVISIONS

CP&Y
12500 SAN PEDRO AVENUE, SUITE 450
SAN ANTONIO, TEXAS 78216
TEL (210) 494-8004
FAX (210) 494-8286
T.B.P.E. FIRM # 1741

TALLEY ROAD

CROSS SECTIONS

SHEET 39 OF 88

PROJECT NUMBER:		SHEET NO.	
		587	
DESIGNED BY:	CP&Y	ROADWAY/HIGHWAY:	
CHECKED BY:	CP&Y	TALLEY ROAD	
DRAWN BY:	CP&Y	STATE	COUNTY
CHECKED BY:	CP&Y	TEXAS	BEXAR

cpybw_ANSIB.tbl
cpypdf_ANSIB.pltcfg
pw:/Active Projects/BEXA14048.01/8.00 Plans and Drawings/8.10 Base Files/14048RDxsec_90.dgn
2/23/2017 4:31:15 PM mberon
pw:/Active Projects/BEXA14048.01/8.00 Plans and Drawings/8.10 Base Files/14048RDxsec_90.dgn

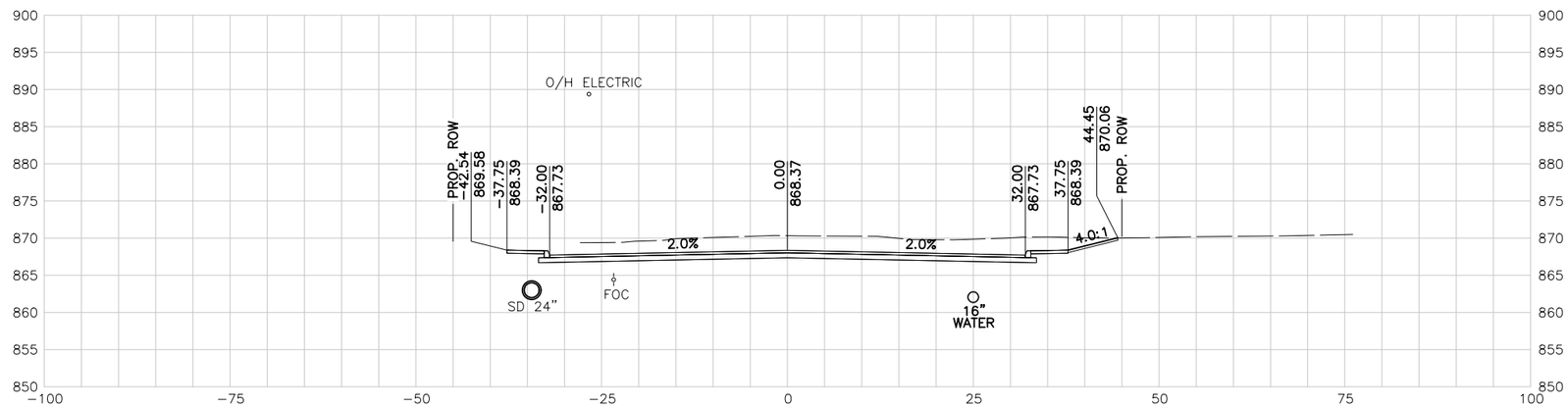

160+00.00 R1

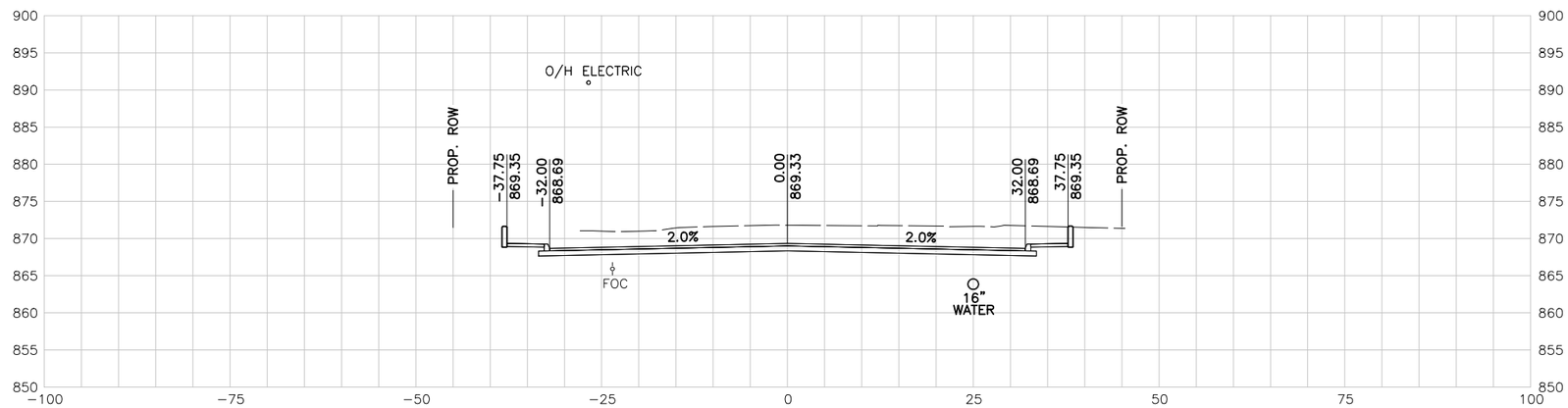

159+50.00 R1

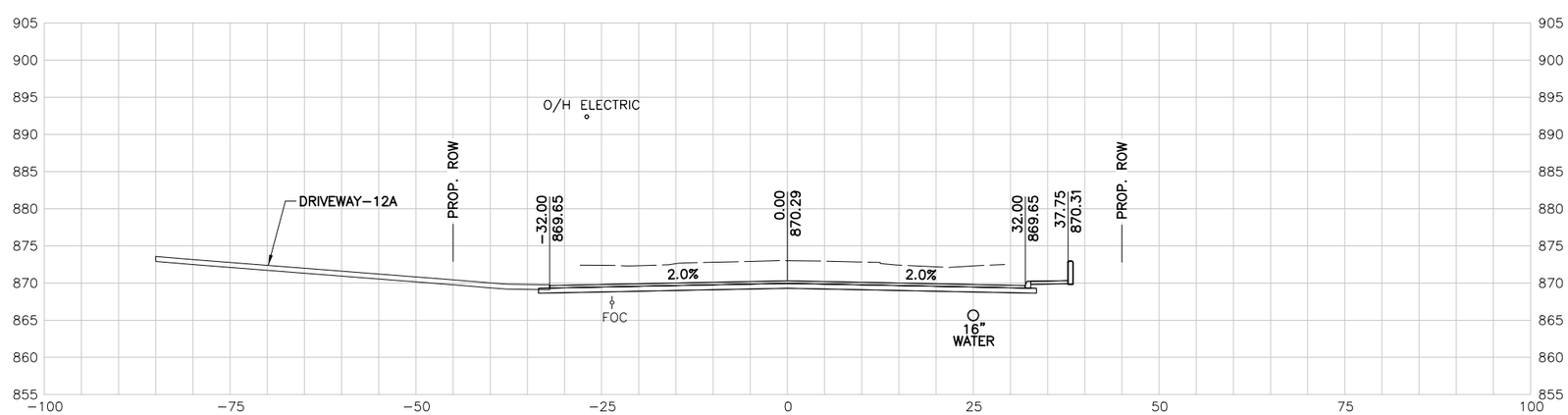

159+00.00 R1

10 5 0 10 20
SCALE FEET

NOTES:

1. UTILITY LOCATIONS ARE APPROXIMATE AND ARE SHOWN FROM THE BEST INFORMATION PROVIDED BY THE UTILITY COMPANIES AT THE TIME PLANS WERE PREPARED.
2. CONTRACTOR SHALL NOTIFY UTILITY COMPANIES AND LOCATE UTILITIES A MINIMUM OF 48 HOURS BEFORE BEGINNING WORK IN AREA.
3. CALL THE TEXAS STATE WIDE ONE CALL LOCATOR NUMBER 1-800-344-8377 48 HOURS BEFORE BEGINNING ANY EXCAVATION.

   DUE TO FEDERAL REGULATION TITLE 49, PART 192.181, CPS MUST MAINTAIN ACCESS TO GAS VALVES AT ALL TIMES. THE CONTRACTOR MUST PROTECT AND WORK AROUND ANY GAS VALVES THAT ARE IN THE PROJECT AREA.

   THE CONTRACTOR WILL BE RESPONSIBLE FOR PROTECTING ALL EXISTING UTILITIES ADJACENT TO THE WORK AREA.
4. SEE CROSS STREET PLAN AND PROFILE SHEETS AND INTERSECTION LAYOUT SHEETS FOR ADDITIONAL INFORMATION AT THE CROSS STREET.
5. SEE DRIVEWAY SUMMARY FOR ADDITIONAL INFORMATION PERTAINING TO DRIVEWAYS.

PRELIMINARY

90% SUBMITTAL
FOR INTERIM REVIEW ONLY
NOT FOR CONSTRUCTION, BIDDING, OR PERMIT PURPOSES.

CP&Y

ENGINEER JAIME AGUILAR
P.E. No. 87606 DATE 2/23/2017

BEXAR COUNTY
PUBLIC WORKS DEPARTMENT

NO	DATE	DESCRIPTION	DWG	CHK

REVISIONS

CP&Y
12500 SAN PEDRO AVENUE, SUITE 450
SAN ANTONIO, TEXAS 78216
TEL (210) 494-8004
FAX (210) 494-8286
T.B.P.E. FIRM # 1741

TALLEY ROAD

CROSS SECTIONS

SHEET 40 OF 88

PROJECT NUMBER:		SHEET NO.	
		588	
DESIGNED BY:	CP&Y	ROADWAY/HIGHWAY:	
CHECKED BY:	CP&Y	TALLEY ROAD	
DRAWN BY:	CP&Y	STATE	COUNTY
CHECKED BY:	CP&Y	TEXAS	BEXAR

2/23/2017 4:31:15 PM mberon
cpybw_ANSIB.tbl
cpypdf_ANSIB.pltcfg
pw:/Active Projects/BEXA14048.01/8.00 Plans and Drawings/8.10 Base Files/14048RDxsec_90.dgn

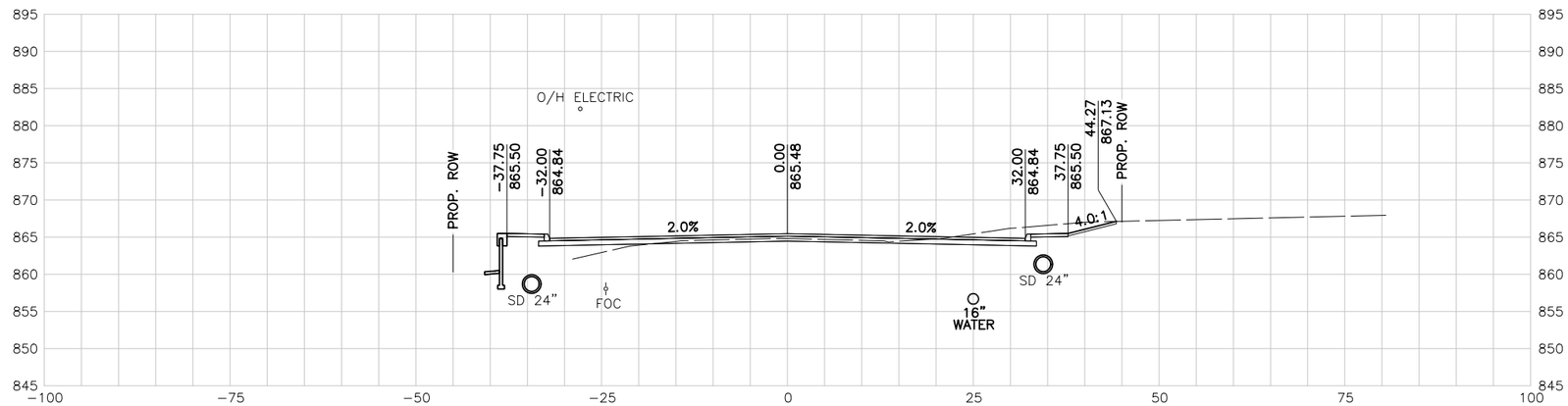

161+50.00 R1

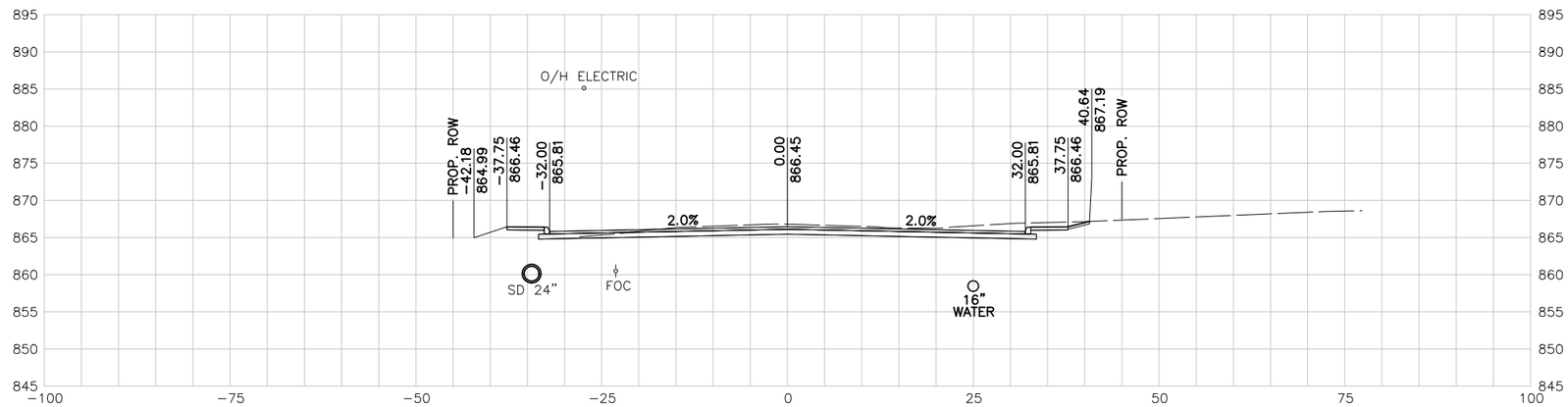

161+00.00 R1

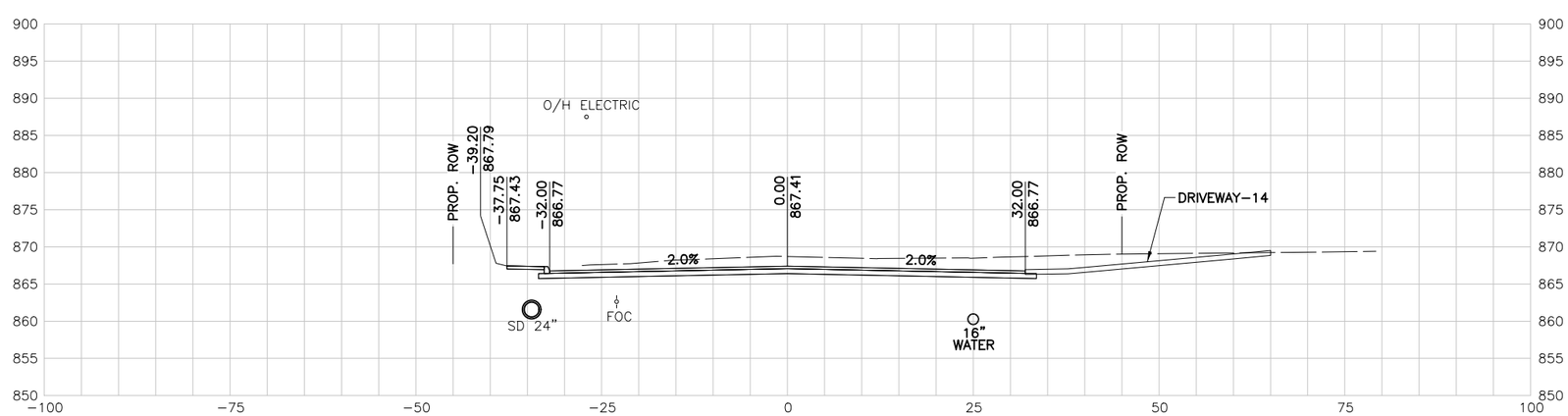

160+50.00 R1

10 5 0 10 20
SCALE FEET

NOTES:

1. UTILITY LOCATIONS ARE APPROXIMATE AND ARE SHOWN FROM THE BEST INFORMATION PROVIDED BY THE UTILITY COMPANIES AT THE TIME PLANS WERE PREPARED.
2. CONTRACTOR SHALL NOTIFY UTILITY COMPANIES AND LOCATE UTILITIES A MINIMUM OF 48 HOURS BEFORE BEGINNING WORK IN AREA.
3. CALL THE TEXAS STATE WIDE ONE CALL LOCATOR NUMBER 1-800-344-8377 48 HOURS BEFORE BEGINNING ANY EXCAVATION.

   DUE TO FEDERAL REGULATION TITLE 49, PART 192.181, CPS MUST MAINTAIN ACCESS TO GAS VALVES AT ALL TIMES. THE CONTRACTOR MUST PROTECT AND WORK AROUND ANY GAS VALVES THAT ARE IN THE PROJECT AREA.

   THE CONTRACTOR WILL BE RESPONSIBLE FOR PROTECTING ALL EXISTING UTILITIES ADJACENT TO THE WORK AREA.
4. SEE CROSS STREET PLAN AND PROFILE SHEETS AND INTERSECTION LAYOUT SHEETS FOR ADDITIONAL INFORMATION AT THE CROSS STREET.
5. SEE DRIVEWAY SUMMARY FOR ADDITIONAL INFORMATION PERTAINING TO DRIVEWAYS.

PRELIMINARY

90% SUBMITTAL
FOR INTERIM REVIEW ONLY
NOT FOR CONSTRUCTION, BIDDING, OR PERMIT PURPOSES.

CP&Y

ENGINEER JAIME AGUILAR
P.E. No. 87606 DATE 2/23/2017

BEXAR COUNTY
PUBLIC WORKS DEPARTMENT

NO	DATE	DESCRIPTION	DWG	CHK

REVISIONS

CP&Y
12500 SAN PEDRO AVENUE, SUITE 450
SAN ANTONIO, TEXAS 78216
TEL (210) 494-8004
FAX (210) 494-8286
T.B.P.E. FIRM # 1741

TALLEY ROAD

CROSS SECTIONS

SHEET 41 OF 88

PROJECT NUMBER:		SHEET NO.
		589
DESIGNED BY: CP&Y	ROADWAY/HIGHWAY:	
CHECKED BY: CP&Y	TALLEY ROAD	
DRAWN BY: CP&Y	STATE	COUNTY
CHECKED BY: CP&Y	TEXAS	BEXAR

cpybw_ANSIB.tbl
cpypdf_ANSIB.pltcfg
pw:/Active Projects/BEXA14048.01/8.00 Plans and Drawings/8.10 Base Files/14048RDxsec_90.dgn
2/23/2017 4:31:16 PM mberon
pw:/Active Projects/BEXA14048.01/8.00 Plans and Drawings/8.10 Base Files/14048RDxsec_90.dgn

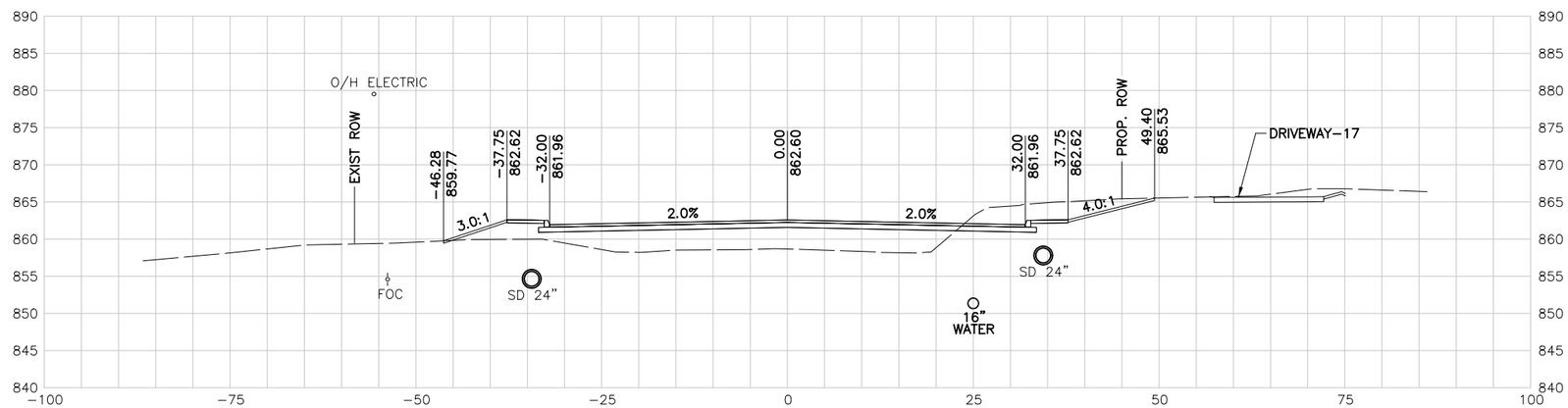

163+00.00 R1

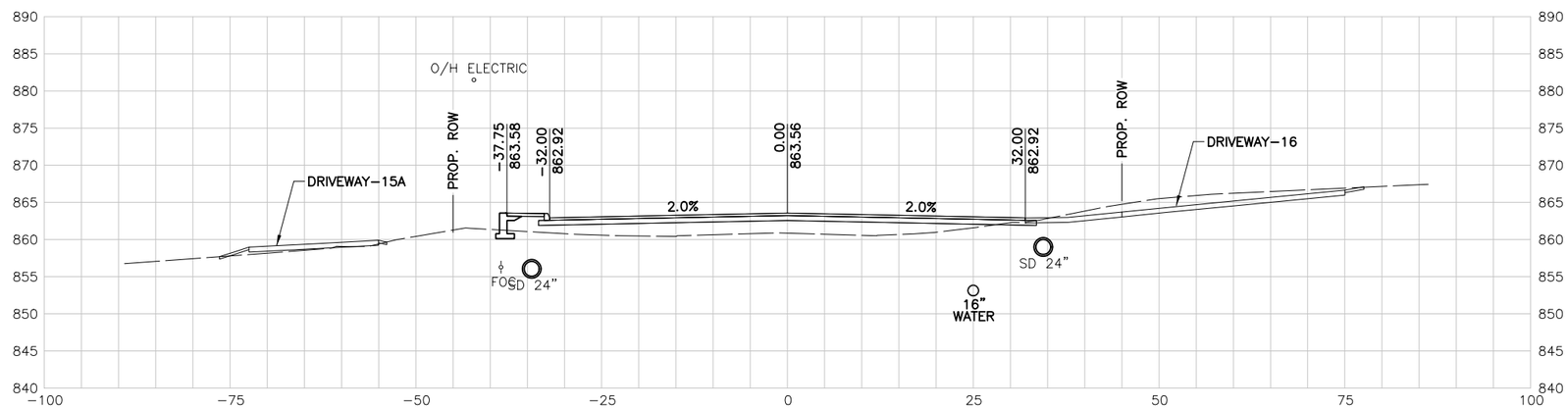

162+50.00 R1

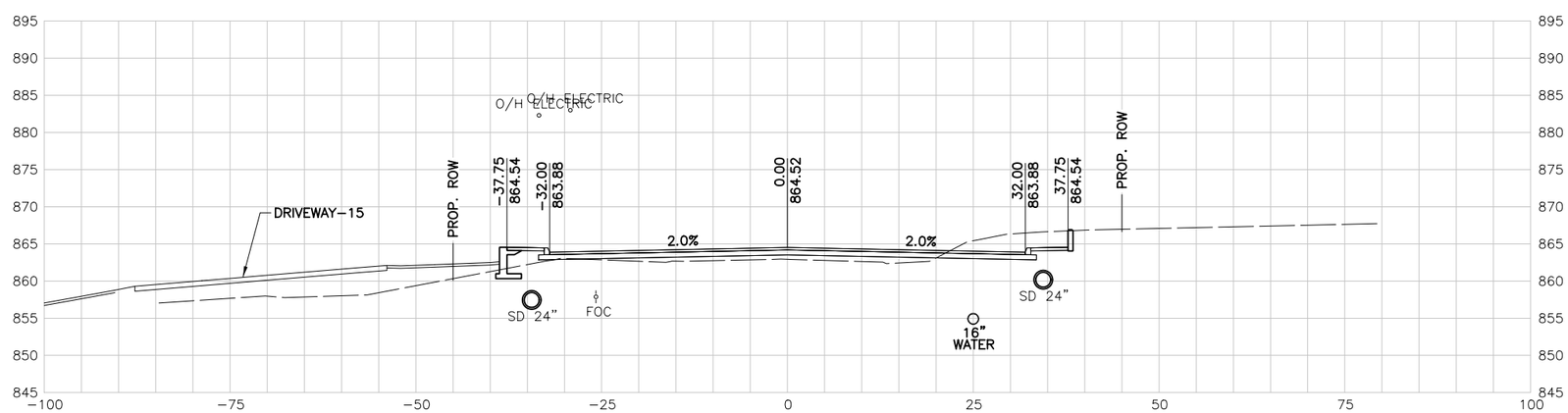

162+00.00 R1

10 5 0 10 20
SCALE FEET

NOTES:

1. UTILITY LOCATIONS ARE APPROXIMATE AND ARE SHOWN FROM THE BEST INFORMATION PROVIDED BY THE UTILITY COMPANIES AT THE TIME PLANS WERE PREPARED.
2. CONTRACTOR SHALL NOTIFY UTILITY COMPANIES AND LOCATE UTILITIES A MINIMUM OF 48 HOURS BEFORE BEGINNING WORK IN AREA.
3. CALL THE TEXAS STATE WIDE ONE CALL LOCATOR NUMBER 1-800-344-8377 48 HOURS BEFORE BEGINNING ANY EXCAVATION.

   DUE TO FEDERAL REGULATION TITLE 49, PART 192.181, CPS MUST MAINTAIN ACCESS TO GAS VALVES AT ALL TIMES. THE CONTRACTOR MUST PROTECT AND WORK AROUND ANY GAS VALVES THAT ARE IN THE PROJECT AREA.

   THE CONTRACTOR WILL BE RESPONSIBLE FOR PROTECTING ALL EXISTING UTILITIES ADJACENT TO THE WORK AREA.
4. SEE CROSS STREET PLAN AND PROFILE SHEETS AND INTERSECTION LAYOUT SHEETS FOR ADDITIONAL INFORMATION AT THE CROSS STREET.
5. SEE DRIVEWAY SUMMARY FOR ADDITIONAL INFORMATION PERTAINING TO DRIVEWAYS.

PRELIMINARY

90% SUBMITTAL
FOR INTERIM REVIEW ONLY
NOT FOR CONSTRUCTION, BIDDING, OR PERMIT PURPOSES.

CP&Y

ENGINEER JAIME AGUILAR
P.E. No. 87606 DATE 2/23/2017

BEXAR COUNTY
PUBLIC WORKS DEPARTMENT

NO	DATE	DESCRIPTION	DWG	CHK

REVISIONS

CP&Y
12500 SAN PEDRO AVENUE, SUITE 450
SAN ANTONIO, TEXAS 78216
TEL (210) 494-8004
FAX (210) 494-8286
T.B.P.E. FIRM # 1741

TALLEY ROAD

CROSS SECTIONS

SHEET 42 OF 88

PROJECT NUMBER:		SHEET NO.	
		590	
DESIGNED BY:	CP&Y	ROADWAY/HIGHWAY:	
CHECKED BY:	CP&Y	TALLEY ROAD	
DRAWN BY:	CP&Y	STATE	COUNTY
CHECKED BY:	CP&Y	TEXAS	BEXAR

cpybw_ANSIB.tbl
cpypdf_ANSIB.pltcfg
pw:/Active Projects/BEXA14048.01/8.00 Plans and Drawings/8.10 Base Files/14048RDxsec_90.dgn
2/23/2017 4:31:16 PM mberon
pw:/Active Projects/BEXA14048.01/8.00 Plans and Drawings/8.10 Base Files/14048RDxsec_90.dgn

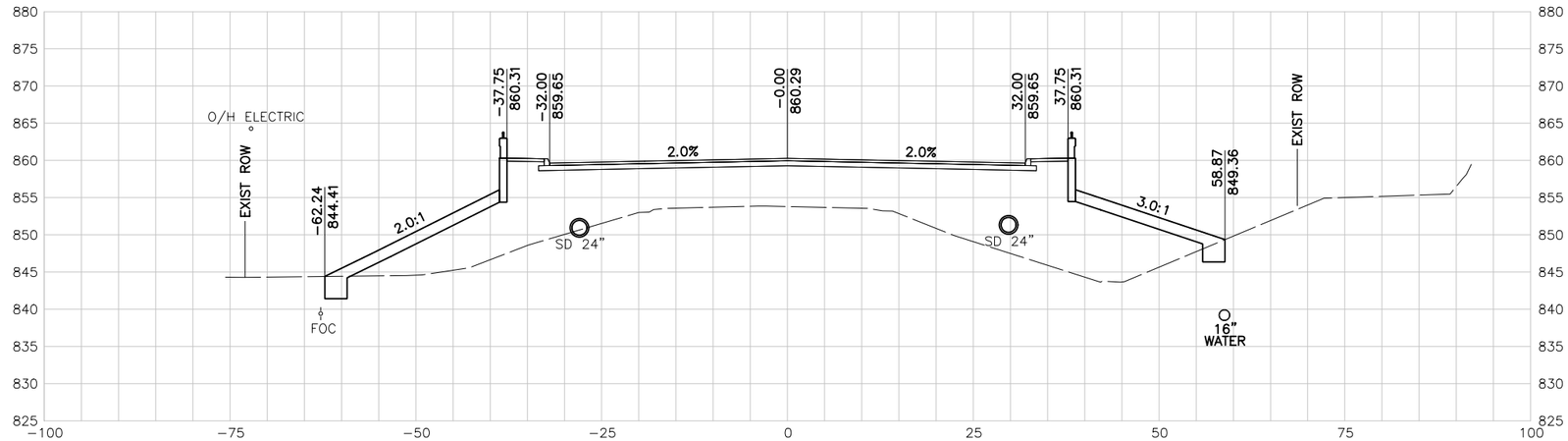

164+20.00 R1

164+00.00 R1

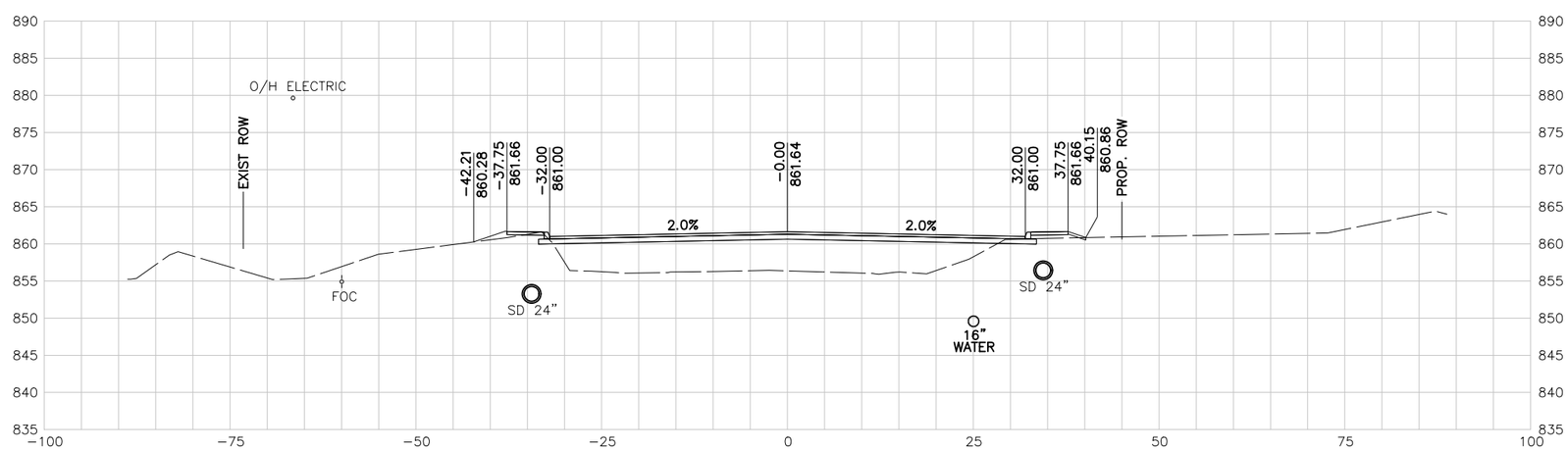

163+50.00 R1

10 5 0 10 20
SCALE FEET

NOTES:

1. UTILITY LOCATIONS ARE APPROXIMATE AND ARE SHOWN FROM THE BEST INFORMATION PROVIDED BY THE UTILITY COMPANIES AT THE TIME PLANS WERE PREPARED.
2. CONTRACTOR SHALL NOTIFY UTILITY COMPANIES AND LOCATE UTILITIES A MINIMUM OF 48 HOURS BEFORE BEGINNING WORK IN AREA.
3. CALL THE TEXAS STATE WIDE ONE CALL LOCATOR NUMBER 1-800-344-8377 48 HOURS BEFORE BEGINNING ANY EXCAVATION.

   DUE TO FEDERAL REGULATION TITLE 49, PART 192.181, CPS MUST MAINTAIN ACCESS TO GAS VALVES AT ALL TIMES. THE CONTRACTOR MUST PROTECT AND WORK AROUND ANY GAS VALVES THAT ARE IN THE PROJECT AREA.

   THE CONTRACTOR WILL BE RESPONSIBLE FOR PROTECTING ALL EXISTING UTILITIES ADJACENT TO THE WORK AREA.
4. SEE CROSS STREET PLAN AND PROFILE SHEETS AND INTERSECTION LAYOUT SHEETS FOR ADDITIONAL INFORMATION AT THE CROSS STREET.
5. SEE DRIVEWAY SUMMARY FOR ADDITIONAL INFORMATION PERTAINING TO DRIVEWAYS.

PRELIMINARY

90% SUBMITTAL
FOR INTERIM REVIEW ONLY
NOT FOR CONSTRUCTION, BIDDING, OR PERMIT PURPOSES.

CP&Y

ENGINEER JAIME AGUILAR
P.E. No. 87606 DATE 2/23/2017

BEXAR COUNTY
PUBLIC WORKS DEPARTMENT

NO	DATE	DESCRIPTION	DWG	CHK

REVISIONS

CP&Y
12500 SAN PEDRO AVENUE, SUITE 450
SAN ANTONIO, TEXAS 78216
TEL (210) 494-8004
FAX (210) 494-8286
T.B.P.E. FIRM # 1741

TALLEY ROAD

CROSS SECTIONS

SHEET 43 OF 88

PROJECT NUMBER:			SHEET NO.
			591
DESIGNED BY:	CP&Y	ROADWAY/HIGHWAY:	
CHECKED BY:	CP&Y	TALLEY ROAD	
DRAWN BY:	CP&Y	STATE	COUNTY
CHECKED BY:	CP&Y	TEXAS	BEXAR

cpybw_ANSIB.tbl
cpypdf_ANSIB.pltcfg
pw:/Active Projects/BEXA14048.01/8.00 Plans and Drawings/8.10 Base Files/14048RDxsec_90.dgn
2/23/2017 4:31:17 PM mberon
pw:/Active Projects/BEXA14048.01/8.00 Plans and Drawings/8.10 Base Files/14048RDxsec_90.dgn

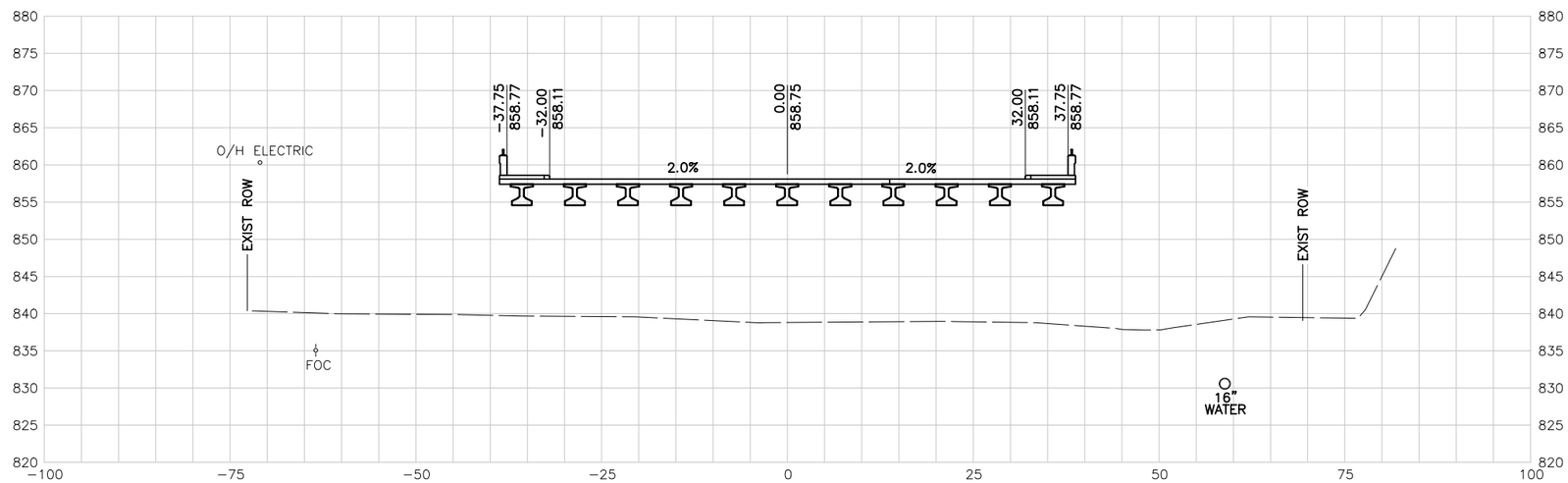

165+00.00 R1

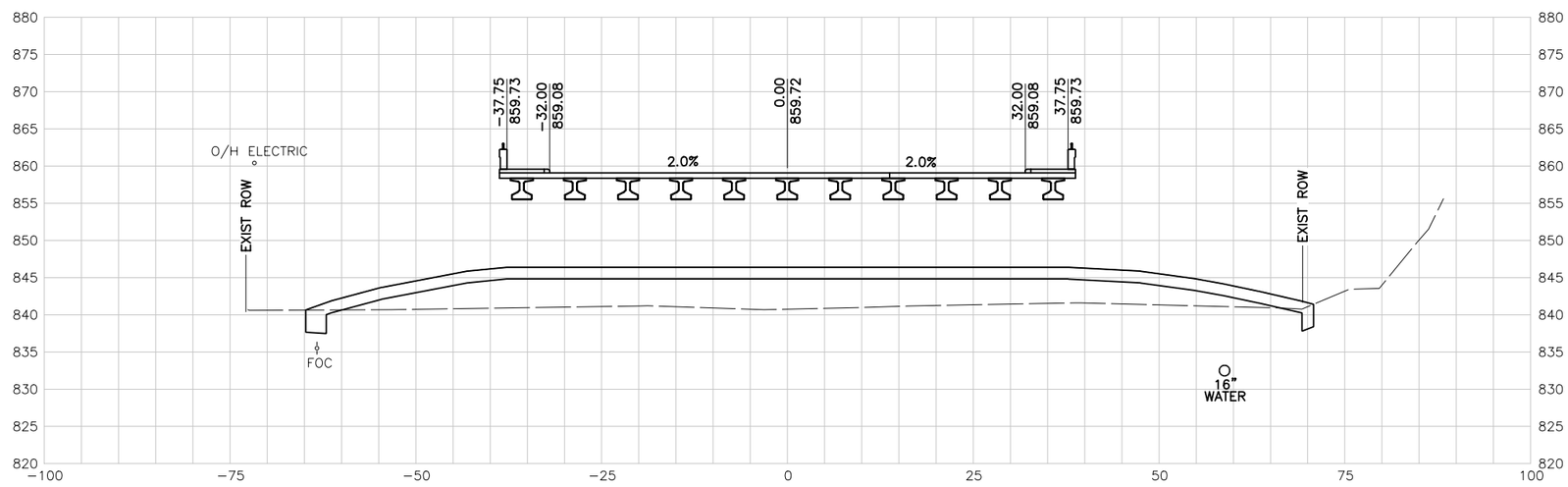

164+50.00 R1

10 5 0 10 20

SCALE FEET

NOTES:

1. UTILITY LOCATIONS ARE APPROXIMATE AND ARE SHOWN FROM THE BEST INFORMATION PROVIDED BY THE UTILITY COMPANIES AT THE TIME PLANS WERE PREPARED.
2. CONTRACTOR SHALL NOTIFY UTILITY COMPANIES AND LOCATE UTILITIES A MINIMUM OF 48 HOURS BEFORE BEGINNING WORK IN AREA.
3. CALL THE TEXAS STATE WIDE ONE CALL LOCATOR NUMBER 1-800-344-8377 48 HOURS BEFORE BEGINNING ANY EXCAVATION.

   DUE TO FEDERAL REGULATION TITLE 49, PART 192.181, CPS MUST MAINTAIN ACCESS TO GAS VALVES AT ALL TIMES. THE CONTRACTOR MUST PROTECT AND WORK AROUND ANY GAS VALVES THAT ARE IN THE PROJECT AREA.

   THE CONTRACTOR WILL BE RESPONSIBLE FOR PROTECTING ALL EXISTING UTILITIES ADJACENT TO THE WORK AREA.
4. SEE CROSS STREET PLAN AND PROFILE SHEETS AND INTERSECTION LAYOUT SHEETS FOR ADDITIONAL INFORMATION AT THE CROSS STREET.
5. SEE DRIVEWAY SUMMARY FOR ADDITIONAL INFORMATION PERTAINING TO DRIVEWAYS.

PRELIMINARY

90% SUBMITTAL
FOR INTERIM REVIEW ONLY
NOT FOR CONSTRUCTION, BIDDING, OR PERMIT PURPOSES.

CP&Y

ENGINEER JAIME AGUILAR
P.E. No. 87606 DATE 2/23/2017

BEXAR COUNTY
PUBLIC WORKS DEPARTMENT

NO	DATE	DESCRIPTION	DWG	CHK

REVISIONS

CP&Y
12500 SAN PEDRO AVENUE, SUITE 450
SAN ANTONIO, TEXAS 78216
TEL (210) 494-8004
FAX (210) 494-8286
T.B.P.E. FIRM # 1741

TALLEY ROAD

CROSS SECTIONS

SHEET 44 OF 88

PROJECT NUMBER:		SHEET NO.	
		592	
DESIGNED BY:	CP&Y	ROADWAY/HIGHWAY:	
CHECKED BY:	CP&Y	TALLEY ROAD	
DRAWN BY:	CP&Y	STATE	COUNTY
CHECKED BY:	CP&Y	TEXAS	BEXAR

cpybw_ANSIB.tbl
cpypdf_ANSIB.pltcfg
pw:/Active Projects/BEXA14048.01/8.00 Plans and Drawings/8.10 Base Files/14048RDxsec_90.dgn
2/23/2017 4:31:17 PM mberan
pw:/Active Projects/BEXA14048.01/8.00 Plans and Drawings/8.10 Base Files/14048RDxsec_90.dgn

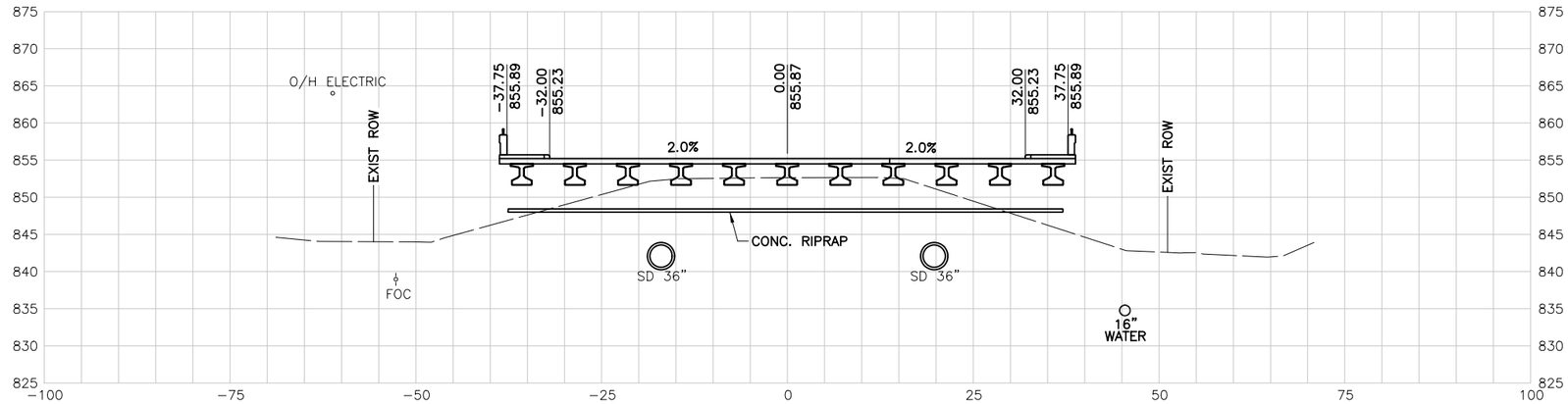

166+50.00 R1

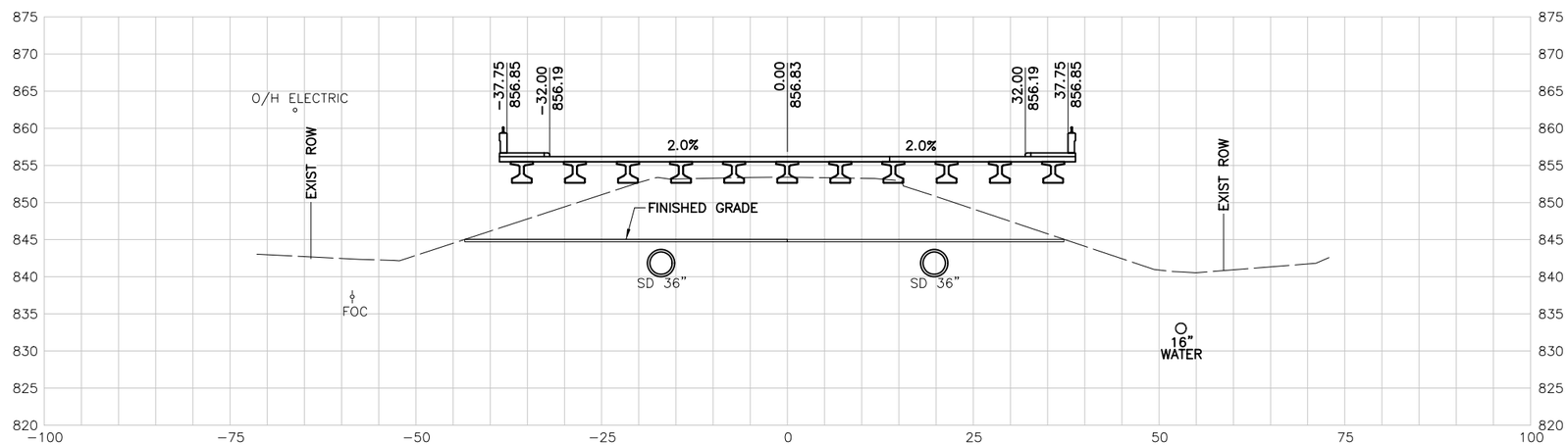

166+00.00 R1

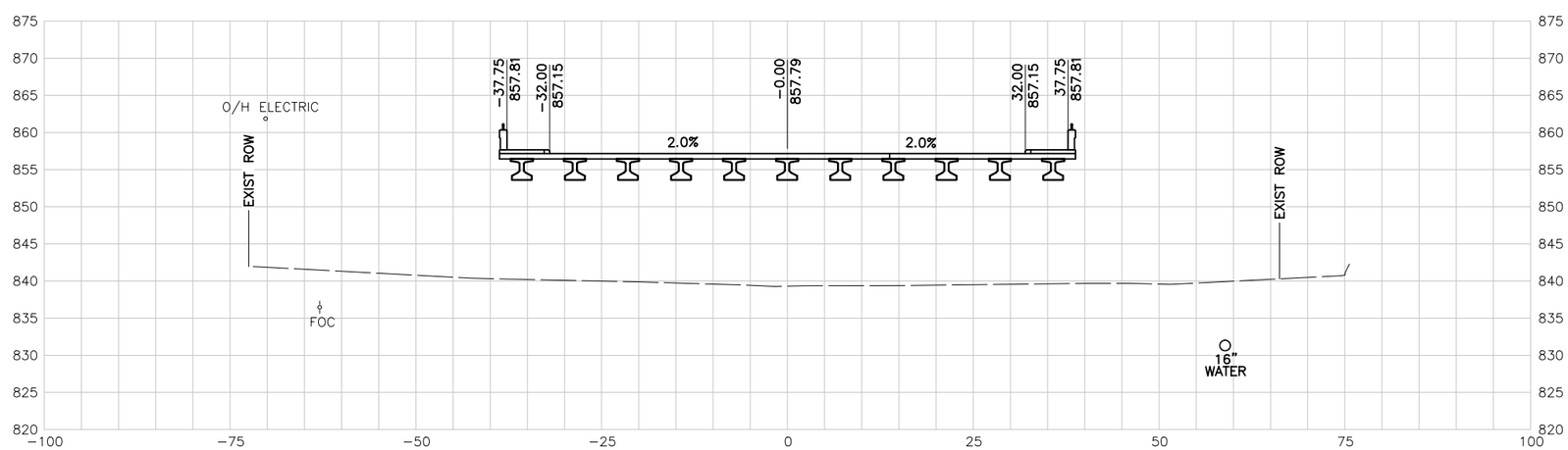

165+50.00 R1

10 5 0 10 20
SCALE FEET

NOTES:

1. UTILITY LOCATIONS ARE APPROXIMATE AND ARE SHOWN FROM THE BEST INFORMATION PROVIDED BY THE UTILITY COMPANIES AT THE TIME PLANS WERE PREPARED.
2. CONTRACTOR SHALL NOTIFY UTILITY COMPANIES AND LOCATE UTILITIES A MINIMUM OF 48 HOURS BEFORE BEGINNING WORK IN AREA.
3. CALL THE TEXAS STATE WIDE ONE CALL LOCATOR NUMBER 1-800-344-8377 48 HOURS BEFORE BEGINNING ANY EXCAVATION.

   DUE TO FEDERAL REGULATION TITLE 49, PART 192.181, CPS MUST MAINTAIN ACCESS TO GAS VALVES AT ALL TIMES. THE CONTRACTOR MUST PROTECT AND WORK AROUND ANY GAS VALVES THAT ARE IN THE PROJECT AREA.

   THE CONTRACTOR WILL BE RESPONSIBLE FOR PROTECTING ALL EXISTING UTILITIES ADJACENT TO THE WORK AREA.
4. SEE CROSS STREET PLAN AND PROFILE SHEETS AND INTERSECTION LAYOUT SHEETS FOR ADDITIONAL INFORMATION AT THE CROSS STREET.
5. SEE DRIVEWAY SUMMARY FOR ADDITIONAL INFORMATION PERTAINING TO DRIVEWAYS.

PRELIMINARY

90% SUBMITTAL
FOR INTERIM REVIEW ONLY
NOT FOR CONSTRUCTION, BIDDING, OR PERMIT PURPOSES.

CP&Y

ENGINEER JAIME AGUILAR
P.E. No. 87606 DATE 2/23/2017

BEXAR COUNTY
PUBLIC WORKS DEPARTMENT

NO	DATE	DESCRIPTION	DWG	CHK

REVISIONS

CP&Y
12500 SAN PEDRO AVENUE, SUITE 450
SAN ANTONIO, TEXAS 78216
TEL (210) 494-8004
FAX (210) 494-8286
T.B.P.E. FIRM # 1741

TALLEY ROAD

CROSS SECTIONS

SHEET 45 OF 88

PROJECT NUMBER:		SHEET NO.	
		593	
DESIGNED BY:	CP&Y	ROADWAY/HIGHWAY:	
CHECKED BY:	CP&Y	TALLEY ROAD	
DRAWN BY:	CP&Y	STATE	COUNTY
CHECKED BY:	CP&Y	TEXAS	BEXAR

cpybw_ANSIB.tbl
cpypdf_ANSIB.pltcfg
pw:/Active Projects/BEXA14048.01/8.00 Plans and Drawings/8.10 Base Files/14048RDxsec_90.dgn
2/23/2017 4:31:18 PM mberon
pw:/Active Projects/BEXA14048.01/8.00 Plans and Drawings/8.10 Base Files/14048RDxsec_90.dgn

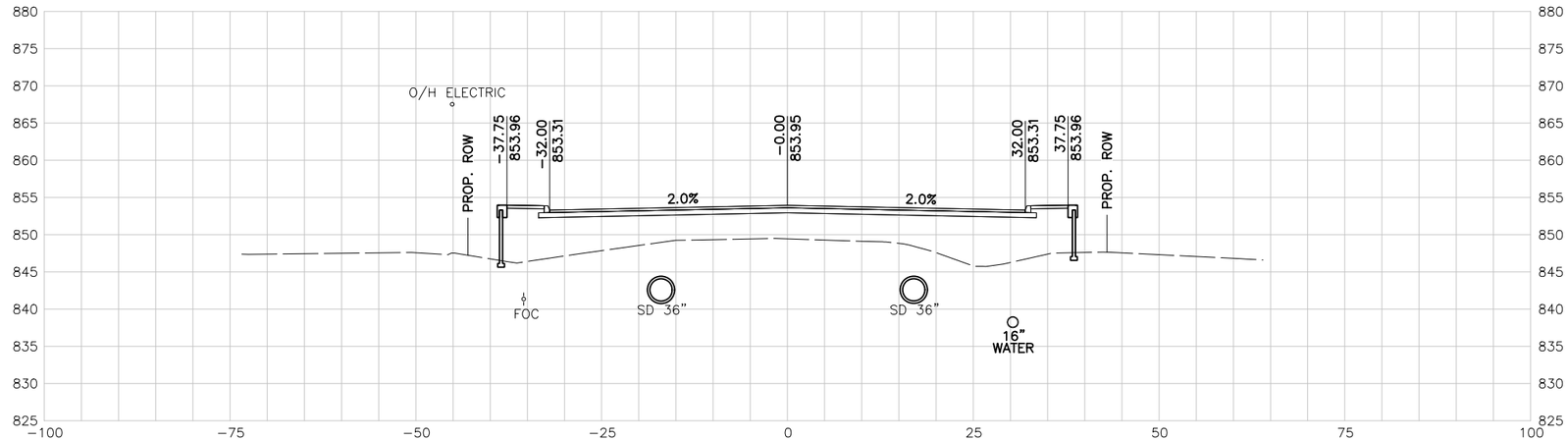

167+50.00 R1

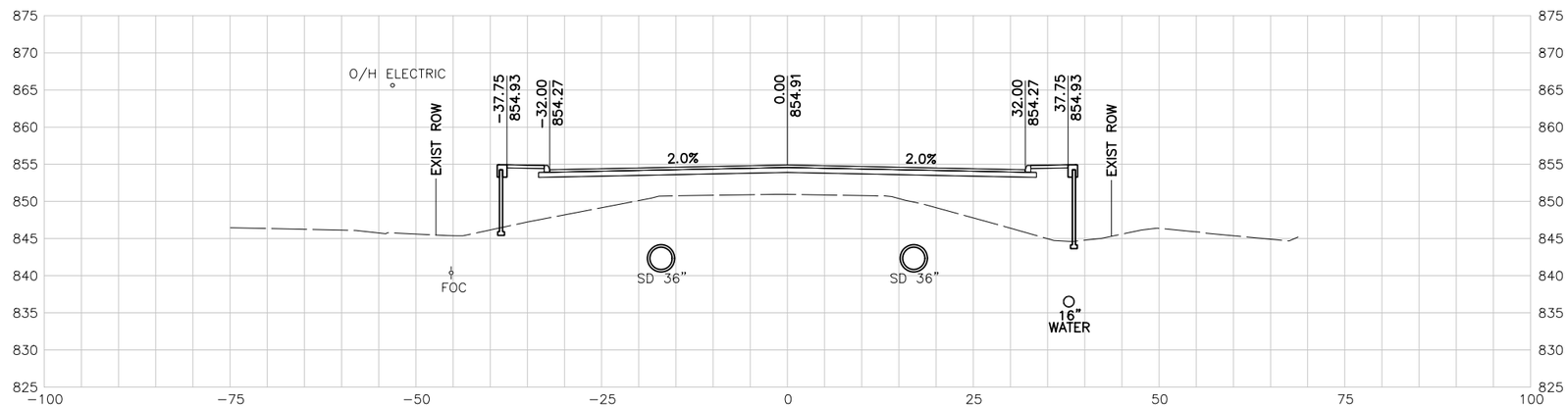

167+00.00 R1

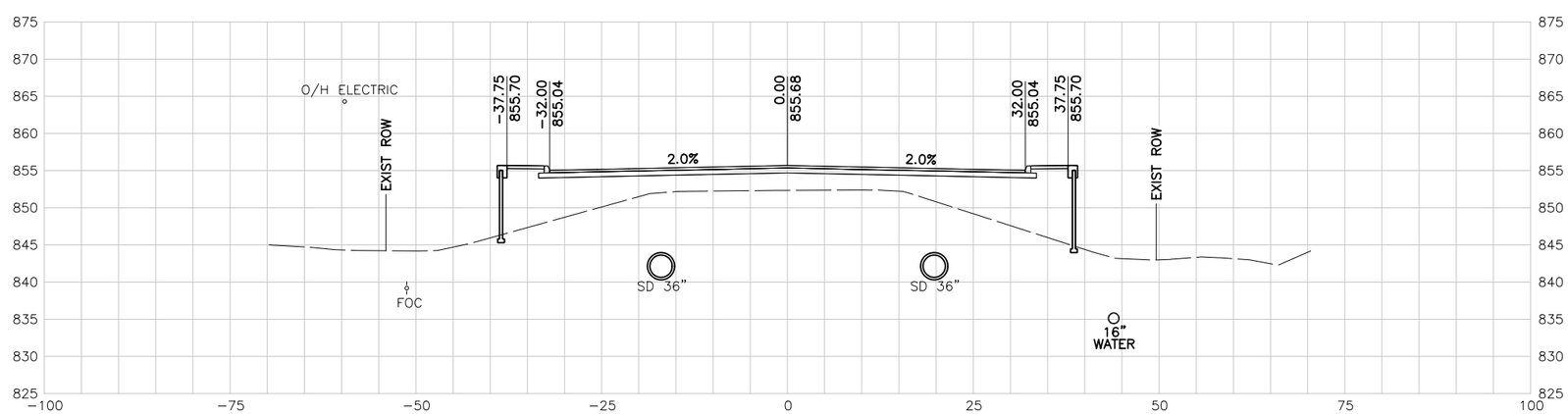

166+60.00 R1

10 5 0 10 20
SCALE FEET

NOTES:

1. UTILITY LOCATIONS ARE APPROXIMATE AND ARE SHOWN FROM THE BEST INFORMATION PROVIDED BY THE UTILITY COMPANIES AT THE TIME PLANS WERE PREPARED.
2. CONTRACTOR SHALL NOTIFY UTILITY COMPANIES AND LOCATE UTILITIES A MINIMUM OF 48 HOURS BEFORE BEGINNING WORK IN AREA.
3. CALL THE TEXAS STATE WIDE ONE CALL LOCATOR NUMBER 1-800-344-8377 48 HOURS BEFORE BEGINNING ANY EXCAVATION.

   DUE TO FEDERAL REGULATION TITLE 49, PART 192.181, CPS MUST MAINTAIN ACCESS TO GAS VALVES AT ALL TIMES. THE CONTRACTOR MUST PROTECT AND WORK AROUND ANY GAS VALVES THAT ARE IN THE PROJECT AREA.

   THE CONTRACTOR WILL BE RESPONSIBLE FOR PROTECTING ALL EXISTING UTILITIES ADJACENT TO THE WORK AREA.
4. SEE CROSS STREET PLAN AND PROFILE SHEETS AND INTERSECTION LAYOUT SHEETS FOR ADDITIONAL INFORMATION AT THE CROSS STREET.
5. SEE DRIVEWAY SUMMARY FOR ADDITIONAL INFORMATION PERTAINING TO DRIVEWAYS.

PRELIMINARY

90% SUBMITTAL
FOR INTERIM REVIEW ONLY
NOT FOR CONSTRUCTION, BIDDING, OR PERMIT PURPOSES.

CP&Y

ENGINEER JAIME AGUILAR
P.E. No. 87606 DATE 2/23/2017

BEXAR COUNTY
PUBLIC WORKS DEPARTMENT

NO	DATE	DESCRIPTION	DWG	CHK

REVISIONS

CP&Y
12500 SAN PEDRO AVENUE, SUITE 450
SAN ANTONIO, TEXAS 78216
TEL (210) 494-8004
FAX (210) 494-8286
T.B.P.E. FIRM # 1741

TALLEY ROAD

CROSS SECTIONS

SHEET 46 OF 88

PROJECT NUMBER:		SHEET NO.
		594
DESIGNED BY: CP&Y	ROADWAY/HIGHWAY:	
CHECKED BY: CP&Y	TALLEY ROAD	
DRAWN BY: CP&Y	STATE	COUNTY
CHECKED BY: CP&Y	TEXAS	BEXAR

2/23/2017 4:31:18 PM mberon cpybw_ANSIB.tbl cpypdf_ANSIB.pltcfg pw:/Active Projects/BEXA14048.01/8.00 Plans and Drawings/8.10 Base Files/14048RDxsec_90.dgn
pw:/Active Projects/BEXA14048.01/8.00 Plans and Drawings/8.10 Base Files/14048RDxsec_90.dgn

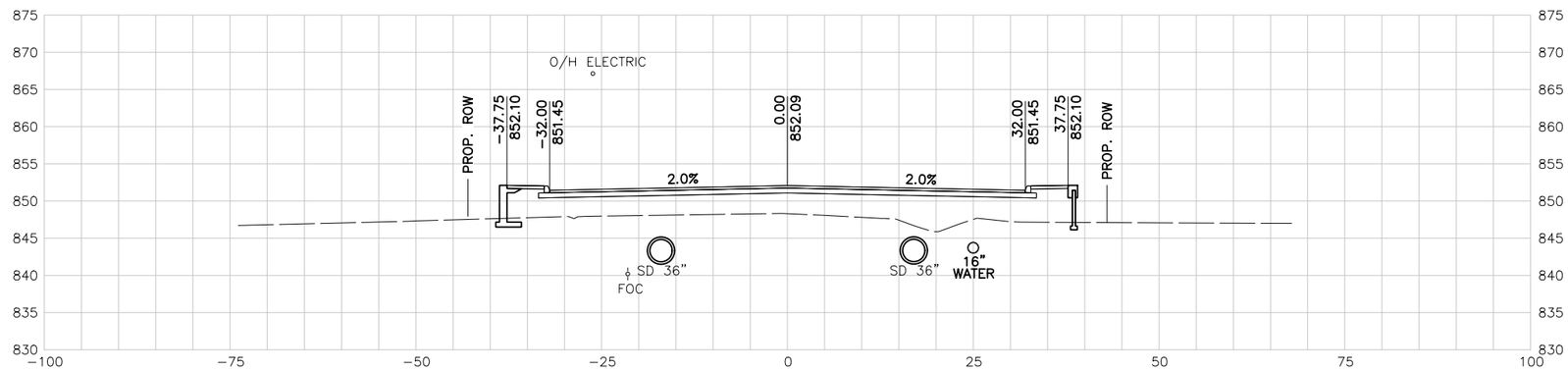

169+00.00 R1

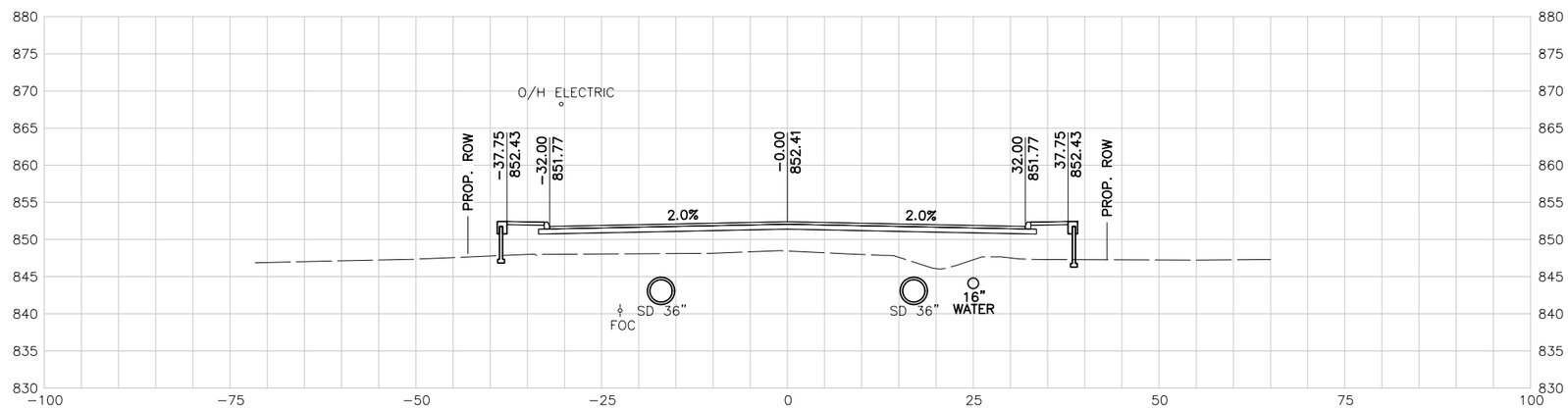

168+50.00 R1

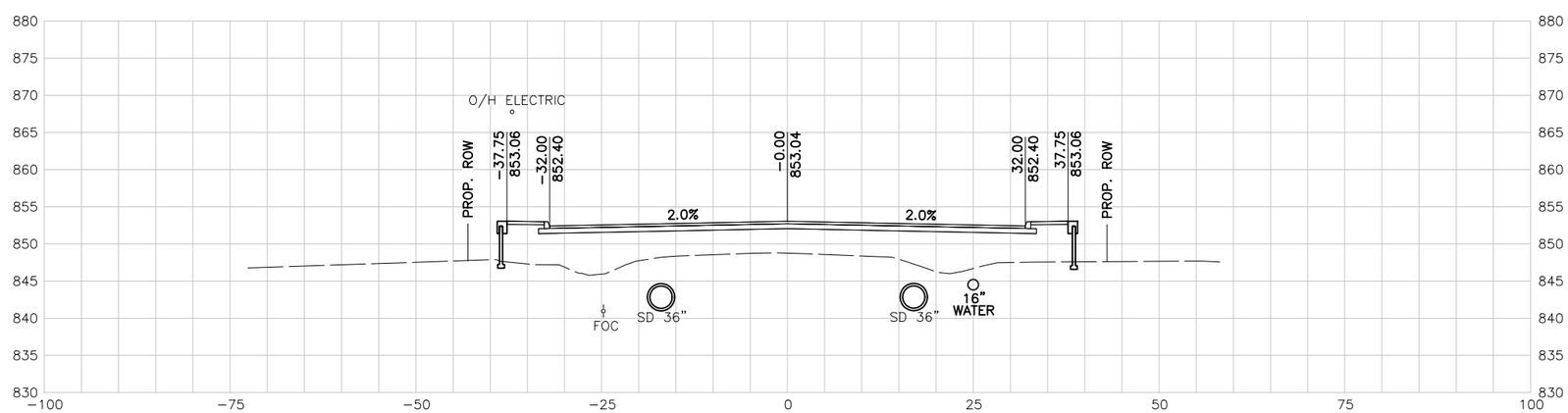

168+00.00 R1

10 5 0 10 20
SCALE FEET

NOTES:

1. UTILITY LOCATIONS ARE APPROXIMATE AND ARE SHOWN FROM THE BEST INFORMATION PROVIDED BY THE UTILITY COMPANIES AT THE TIME PLANS WERE PREPARED.
2. CONTRACTOR SHALL NOTIFY UTILITY COMPANIES AND LOCATE UTILITIES A MINIMUM OF 48 HOURS BEFORE BEGINNING WORK IN AREA.
3. CALL THE TEXAS STATE WIDE ONE CALL LOCATOR NUMBER 1-800-344-8377 48 HOURS BEFORE BEGINNING ANY EXCAVATION.

   DUE TO FEDERAL REGULATION TITLE 49, PART 192.181, CPS MUST MAINTAIN ACCESS TO GAS VALVES AT ALL TIMES. THE CONTRACTOR MUST PROTECT AND WORK AROUND ANY GAS VALVES THAT ARE IN THE PROJECT AREA.

   THE CONTRACTOR WILL BE RESPONSIBLE FOR PROTECTING ALL EXISTING UTILITIES ADJACENT TO THE WORK AREA.
4. SEE CROSS STREET PLAN AND PROFILE SHEETS AND INTERSECTION LAYOUT SHEETS FOR ADDITIONAL INFORMATION AT THE CROSS STREET.
5. SEE DRIVEWAY SUMMARY FOR ADDITIONAL INFORMATION PERTAINING TO DRIVEWAYS.

PRELIMINARY

90% SUBMITTAL
FOR INTERIM REVIEW ONLY
NOT FOR CONSTRUCTION, BIDDING, OR PERMIT PURPOSES.

CP&Y

ENGINEER JAIME AGUILAR
P.E. No. 87606 DATE 2/23/2017

BEXAR COUNTY
PUBLIC WORKS DEPARTMENT

NO	DATE	DESCRIPTION	DWG	CHK

REVISIONS

CP&Y
12500 SAN PEDRO AVENUE, SUITE 450
SAN ANTONIO, TEXAS 78216
TEL (210) 494-8004
FAX (210) 494-8286
T.B.P.E. FIRM # 1741

TALLEY ROAD

CROSS SECTIONS

SHEET 47 OF 88

PROJECT NUMBER:		SHEET NO.	
		595	
DESIGNED BY:	CP&Y	ROADWAY/HIGHWAY:	
CHECKED BY:	CP&Y	TALLEY ROAD	
DRAWN BY:	CP&Y	STATE	COUNTY
CHECKED BY:	CP&Y	TEXAS	BEXAR

cpybw_ANSIB.tbl
cpypdf_ANSIB.pltcfg
pw:/Active Projects/BEXA14048.01/8.00 Plans and Drawings/8.10 Base Files/14048RDxsec_90.dgn
2/23/2017 4:31:19 PM mberon
pw:/Active Projects/BEXA14048.01/8.00 Plans and Drawings/8.10 Base Files/14048RDxsec_90.dgn

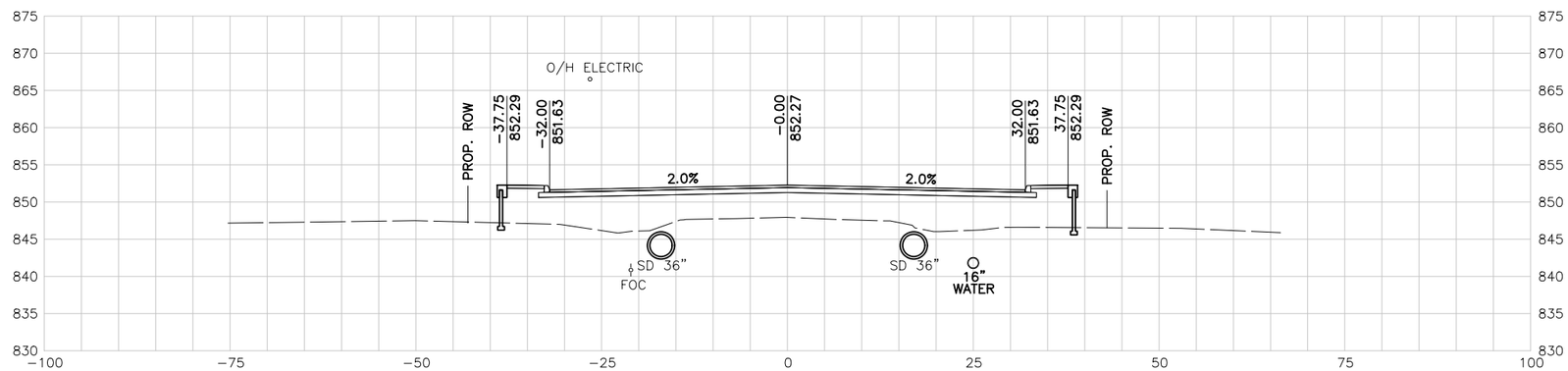

170+50.00 R1

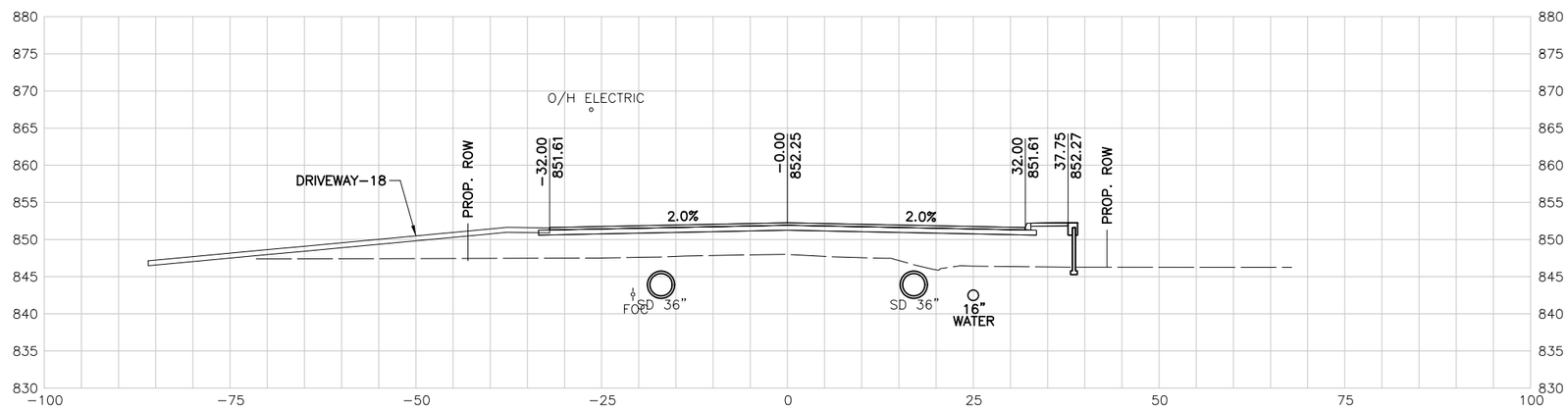

170+00.00 R1

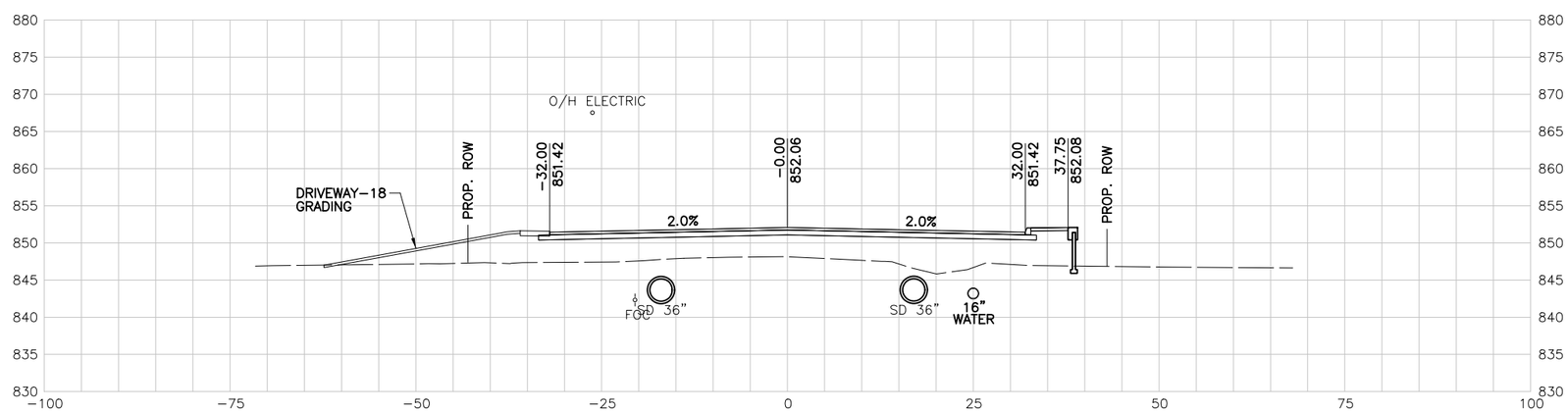

169+50.00 R1

10 5 0 10 20
SCALE FEET

NOTES:

1. UTILITY LOCATIONS ARE APPROXIMATE AND ARE SHOWN FROM THE BEST INFORMATION PROVIDED BY THE UTILITY COMPANIES AT THE TIME PLANS WERE PREPARED.
2. CONTRACTOR SHALL NOTIFY UTILITY COMPANIES AND LOCATE UTILITIES A MINIMUM OF 48 HOURS BEFORE BEGINNING WORK IN AREA.
3. CALL THE TEXAS STATE WIDE ONE CALL LOCATOR NUMBER 1-800-344-8377 48 HOURS BEFORE BEGINNING ANY EXCAVATION.

   DUE TO FEDERAL REGULATION TITLE 49, PART 192.181, CPS MUST MAINTAIN ACCESS TO GAS VALVES AT ALL TIMES. THE CONTRACTOR MUST PROTECT AND WORK AROUND ANY GAS VALVES THAT ARE IN THE PROJECT AREA.

   THE CONTRACTOR WILL BE RESPONSIBLE FOR PROTECTING ALL EXISTING UTILITIES ADJACENT TO THE WORK AREA.
4. SEE CROSS STREET PLAN AND PROFILE SHEETS AND INTERSECTION LAYOUT SHEETS FOR ADDITIONAL INFORMATION AT THE CROSS STREET.
5. SEE DRIVEWAY SUMMARY FOR ADDITIONAL INFORMATION PERTAINING TO DRIVEWAYS.

PRELIMINARY

90% SUBMITTAL
FOR INTERIM REVIEW ONLY
NOT FOR CONSTRUCTION, BIDDING, OR PERMIT PURPOSES.

CP&Y

ENGINEER JAIME AGUILAR
P.E. No. 87606 DATE 2/23/2017

BEXAR COUNTY
PUBLIC WORKS DEPARTMENT

NO	DATE	DESCRIPTION	DWG	CHK

REVISIONS

CP&Y
12500 SAN PEDRO AVENUE, SUITE 450
SAN ANTONIO, TEXAS 78216
TEL (210) 494-8004
FAX (210) 494-8286
T.B.P.E. FIRM # 1741

TALLEY ROAD

CROSS SECTIONS

SHEET 48 OF 88

PROJECT NUMBER:		SHEET NO.	
		596	
DESIGNED BY:	CP&Y	ROADWAY/HIGHWAY:	
CHECKED BY:	CP&Y	TALLEY ROAD	
DRAWN BY:	CP&Y	STATE	COUNTY
CHECKED BY:	CP&Y	TEXAS	BEXAR

cpybw_ANSIB.tbl
cpycd_ANSIB.pltcfg
pw:/Active Projects/BEXA14048.01/8.00 Plans and Drawings/8.10 Base Files/14048RDxsec_90.dgn
2/23/2017 4:31:19 PM mberan
pw:/Active Projects/BEXA14048.01/8.00 Plans and Drawings/8.10 Base Files/14048RDxsec_90.dgn

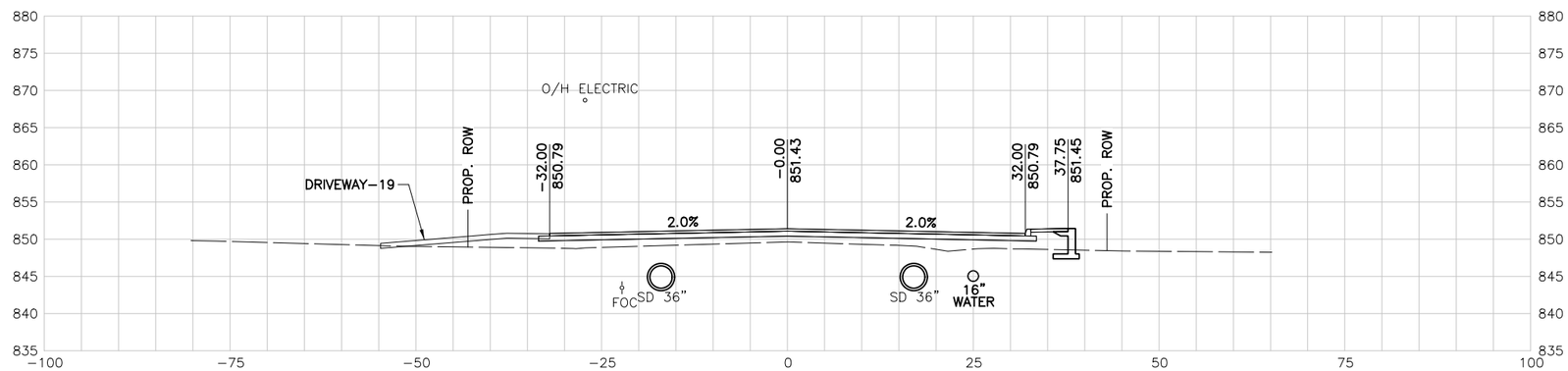

172+00.00 R1

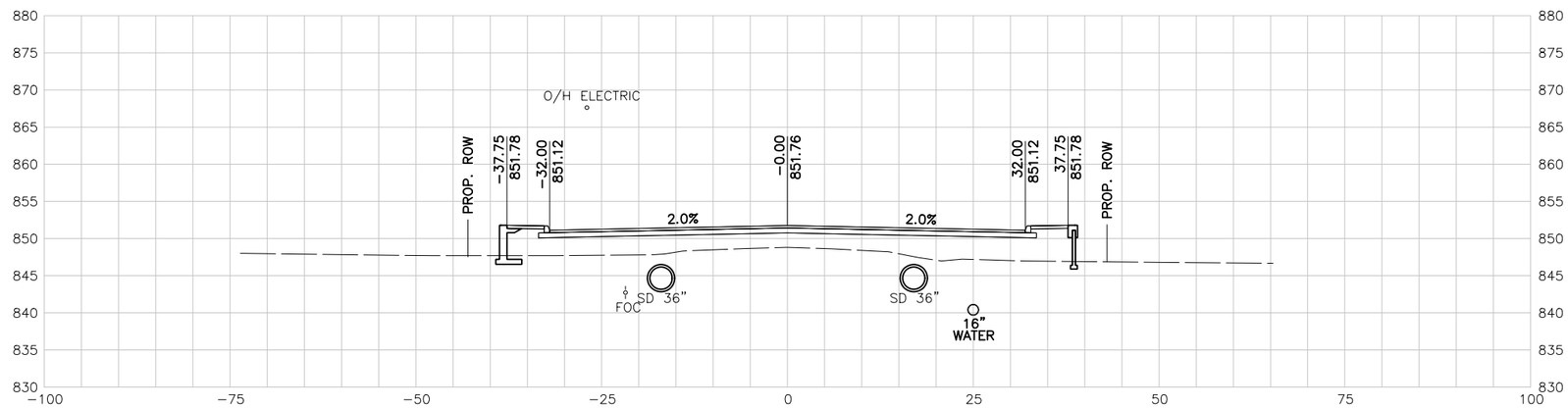

171+50.00 R1

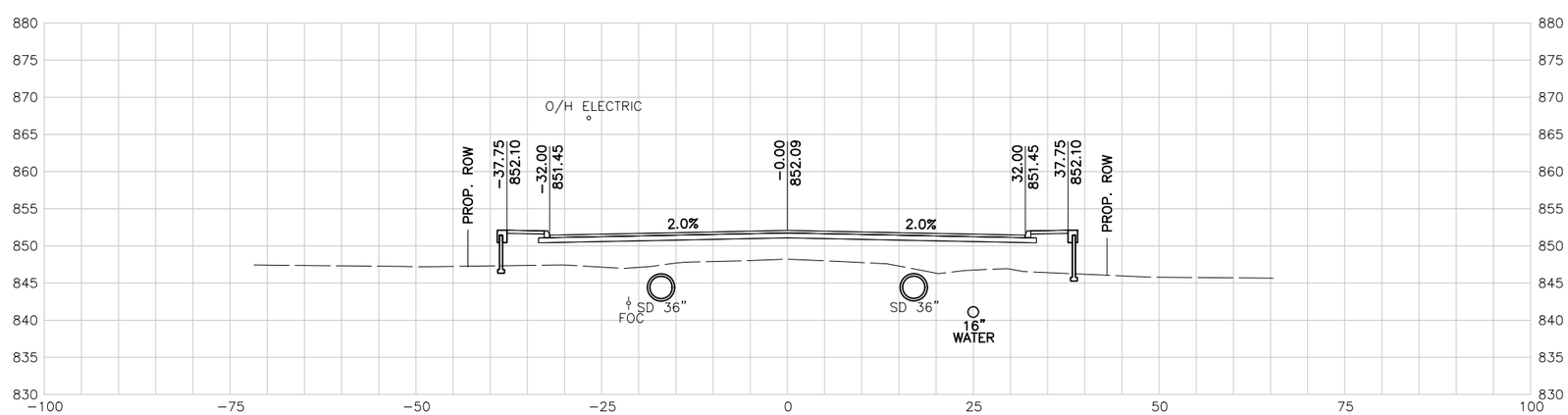

171+00.00 R1

10 5 0 10 20
SCALE FEET

NOTES:

1. UTILITY LOCATIONS ARE APPROXIMATE AND ARE SHOWN FROM THE BEST INFORMATION PROVIDED BY THE UTILITY COMPANIES AT THE TIME PLANS WERE PREPARED.
2. CONTRACTOR SHALL NOTIFY UTILITY COMPANIES AND LOCATE UTILITIES A MINIMUM OF 48 HOURS BEFORE BEGINNING WORK IN AREA.
3. CALL THE TEXAS STATE WIDE ONE CALL LOCATOR NUMBER 1-800-344-8377 48 HOURS BEFORE BEGINNING ANY EXCAVATION.

   DUE TO FEDERAL REGULATION TITLE 49, PART 192.181, CPS MUST MAINTAIN ACCESS TO GAS VALVES AT ALL TIMES. THE CONTRACTOR MUST PROTECT AND WORK AROUND ANY GAS VALVES THAT ARE IN THE PROJECT AREA.

   THE CONTRACTOR WILL BE RESPONSIBLE FOR PROTECTING ALL EXISTING UTILITIES ADJACENT TO THE WORK AREA.
4. SEE CROSS STREET PLAN AND PROFILE SHEETS AND INTERSECTION LAYOUT SHEETS FOR ADDITIONAL INFORMATION AT THE CROSS STREET.
5. SEE DRIVEWAY SUMMARY FOR ADDITIONAL INFORMATION PERTAINING TO DRIVEWAYS.

PRELIMINARY

90% SUBMITTAL
FOR INTERIM REVIEW ONLY
NOT FOR CONSTRUCTION, BIDDING, OR PERMIT PURPOSES.

CP&Y

ENGINEER JAIME AGUILAR
P.E. No. 87606 DATE 2/23/2017

BEXAR COUNTY
PUBLIC WORKS DEPARTMENT

NO	DATE	DESCRIPTION	DWG	CHK

REVISIONS

CP&Y
12500 SAN PEDRO AVENUE, SUITE 450
SAN ANTONIO, TEXAS 78216
TEL (210) 494-8004
FAX (210) 494-8286
T.B.P.E. FIRM # 1741

TALLEY ROAD

CROSS SECTIONS

SHEET 49 OF 88

PROJECT NUMBER:		SHEET NO.	
		597	
DESIGNED BY:	CP&Y	ROADWAY/HIGHWAY:	
CHECKED BY:	CP&Y	TALLEY ROAD	
DRAWN BY:	CP&Y	STATE	COUNTY
CHECKED BY:	CP&Y	TEXAS	BEXAR

cpybw_ANSIB.tbl
cpypdf_ANSIB.pltcfg
pw:/Active Projects/BEXA14048.01/8.00 Plans and Drawings/8.10 Base Files/14048RDxsec_90.dgn
2/23/2017 4:31:20 PM mberon
pw:/Active Projects/BEXA14048.01/8.00 Plans and Drawings/8.10 Base Files/14048RDxsec_90.dgn

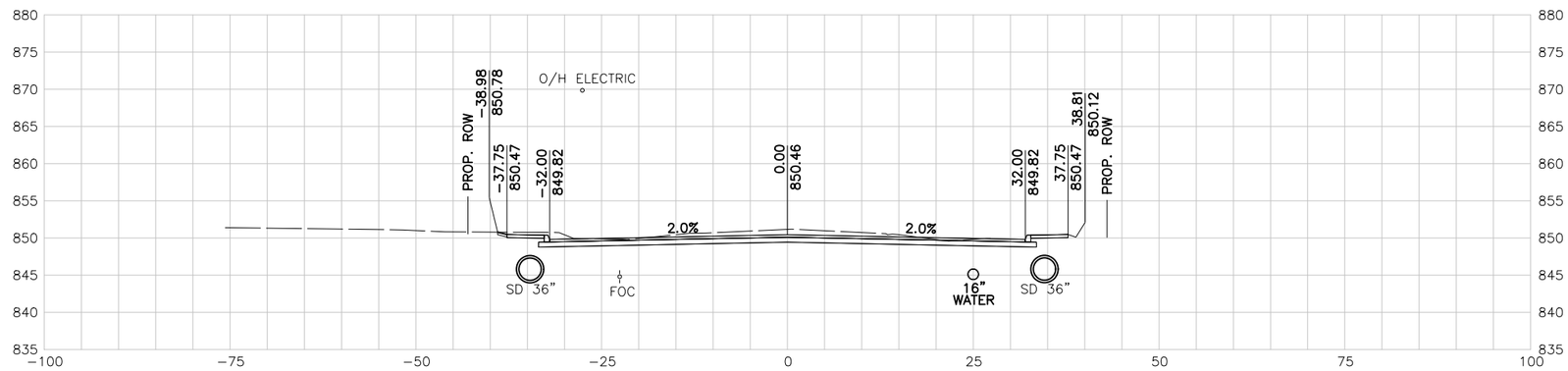

173+50.00 R1

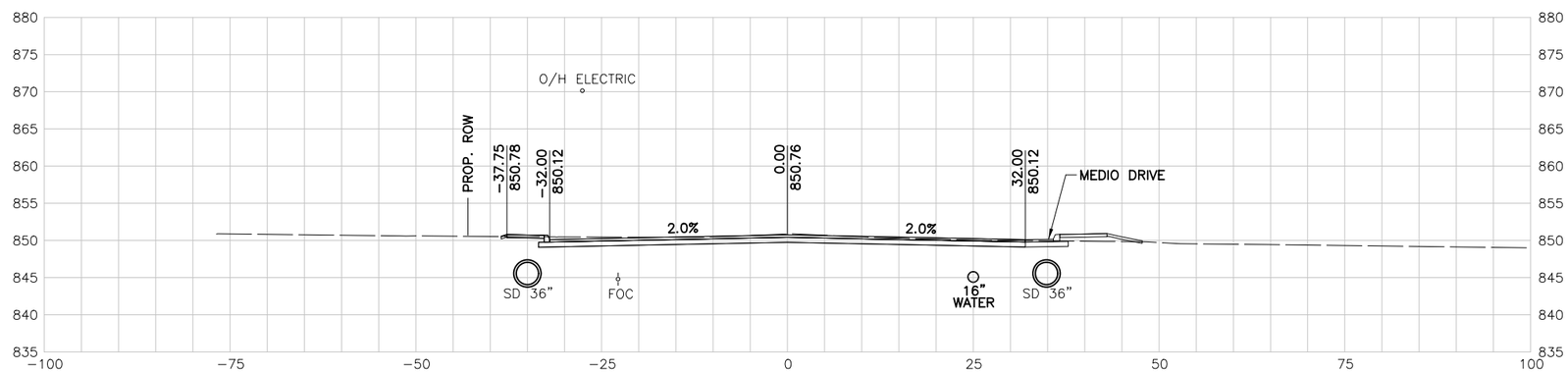

173+00.00 R1

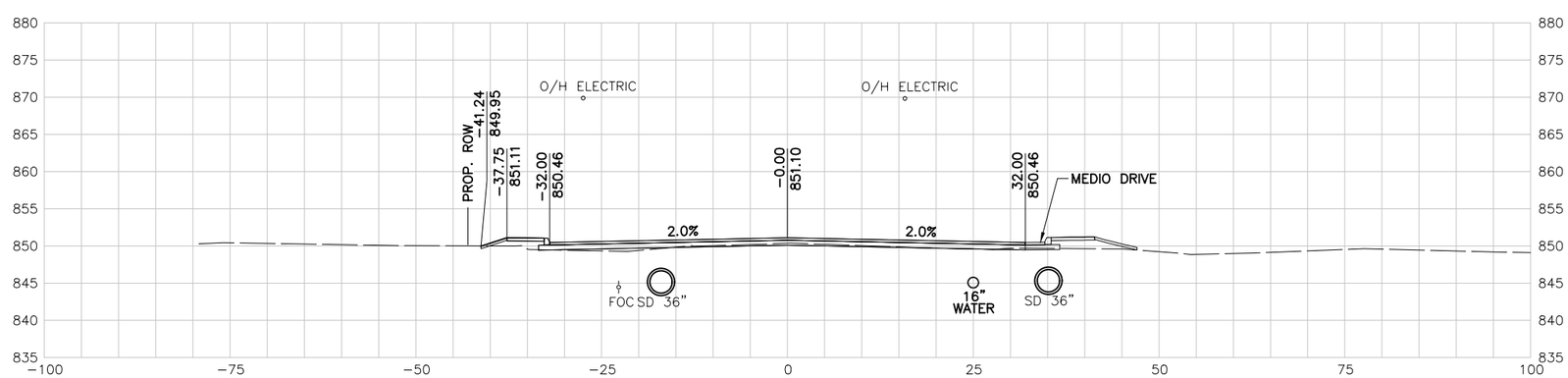

172+50.00 R1

10 5 0 10 20
SCALE FEET

NOTES:

1. UTILITY LOCATIONS ARE APPROXIMATE AND ARE SHOWN FROM THE BEST INFORMATION PROVIDED BY THE UTILITY COMPANIES AT THE TIME PLANS WERE PREPARED.
2. CONTRACTOR SHALL NOTIFY UTILITY COMPANIES AND LOCATE UTILITIES A MINIMUM OF 48 HOURS BEFORE BEGINNING WORK IN AREA.
3. CALL THE TEXAS STATE WIDE ONE CALL LOCATOR NUMBER 1-800-344-8377 48 HOURS BEFORE BEGINNING ANY EXCAVATION.

   DUE TO FEDERAL REGULATION TITLE 49, PART 192.181, CPS MUST MAINTAIN ACCESS TO GAS VALVES AT ALL TIMES. THE CONTRACTOR MUST PROTECT AND WORK AROUND ANY GAS VALVES THAT ARE IN THE PROJECT AREA.

   THE CONTRACTOR WILL BE RESPONSIBLE FOR PROTECTING ALL EXISTING UTILITIES ADJACENT TO THE WORK AREA.
4. SEE CROSS STREET PLAN AND PROFILE SHEETS AND INTERSECTION LAYOUT SHEETS FOR ADDITIONAL INFORMATION AT THE CROSS STREET.
5. SEE DRIVEWAY SUMMARY FOR ADDITIONAL INFORMATION PERTAINING TO DRIVEWAYS.

PRELIMINARY

90% SUBMITTAL
FOR INTERIM REVIEW ONLY
NOT FOR CONSTRUCTION, BIDDING, OR PERMIT PURPOSES.

CP&Y

ENGINEER JAIME AGUILAR
P.E. No. 87606 DATE 2/23/2017

BEXAR COUNTY
PUBLIC WORKS DEPARTMENT

NO	DATE	DESCRIPTION	DWG	CHK

REVISIONS

CP&Y
12500 SAN PEDRO AVENUE, SUITE 450
SAN ANTONIO, TEXAS 78216
TEL (210) 494-8004
FAX (210) 494-8286
T.B.P.E. FIRM # 1741

TALLEY ROAD

CROSS SECTIONS

SHEET 50 OF 88

PROJECT NUMBER:		SHEET NO.
		598
DESIGNED BY: CP&Y	ROADWAY/HIGHWAY:	
CHECKED BY: CP&Y	TALLEY ROAD	
DRAWN BY: CP&Y	STATE	COUNTY
CHECKED BY: CP&Y	TEXAS	BEXAR

2/23/2017 4:31:20 PM mberan
cpybw_ANSIB.tbl
cpypdf_ANSIB.pltcfg
pw:/Active Projects/BEXA14048.01/8.00 Plans and Drawings/8.10 Base Files/14048RDxsec_90.dgn

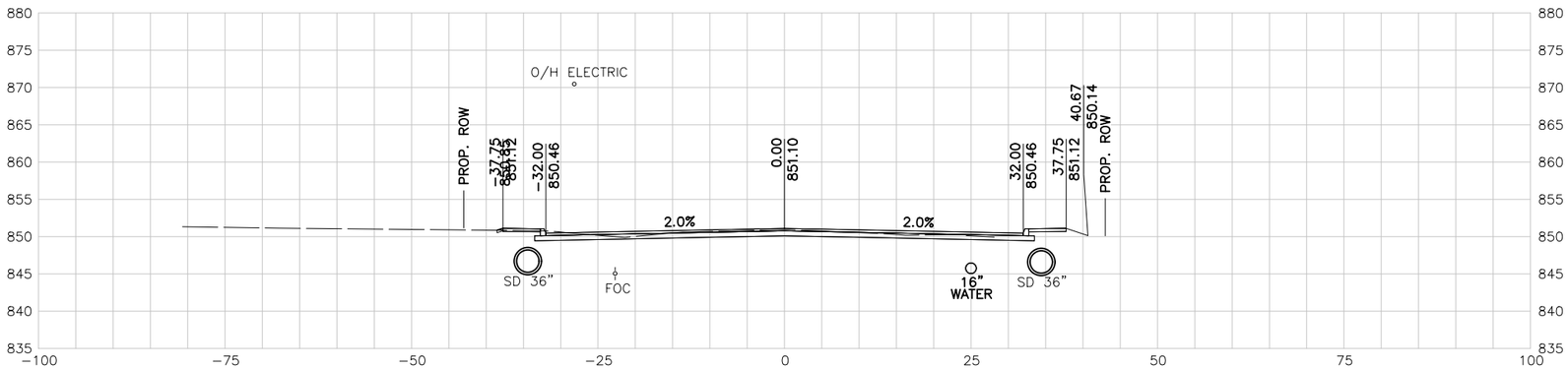

175+00.00 R1

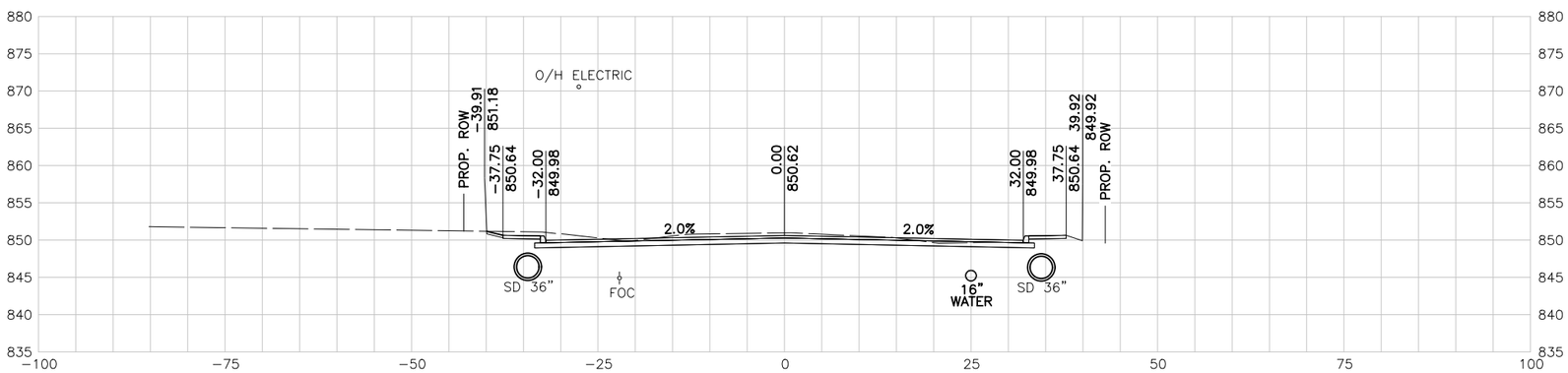

174+50.00 R1

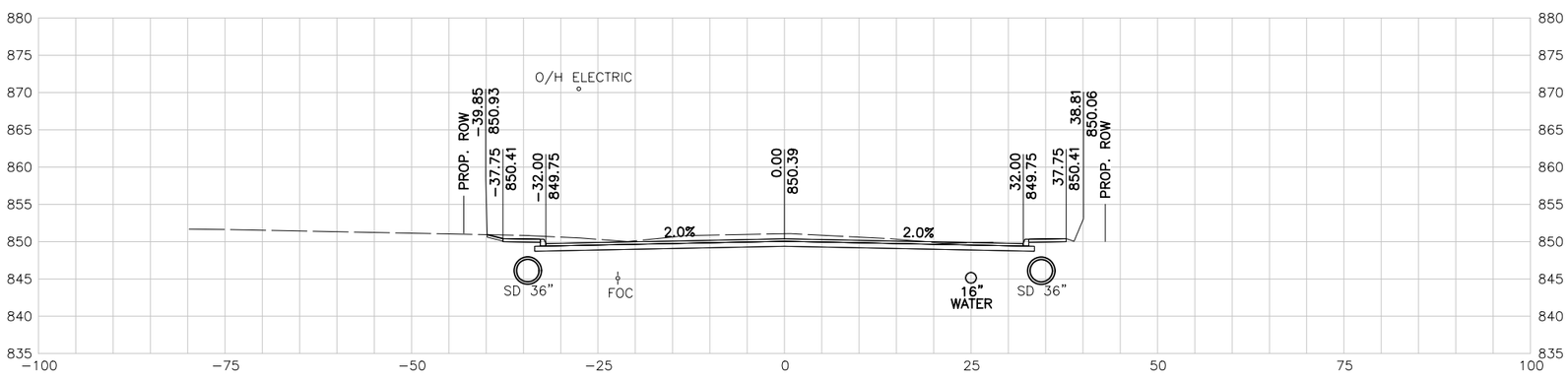

174+00.00 R1

10 5 0 10 20
SCALE FEET

NOTES:

1. UTILITY LOCATIONS ARE APPROXIMATE AND ARE SHOWN FROM THE BEST INFORMATION PROVIDED BY THE UTILITY COMPANIES AT THE TIME PLANS WERE PREPARED.
2. CONTRACTOR SHALL NOTIFY UTILITY COMPANIES AND LOCATE UTILITIES A MINIMUM OF 48 HOURS BEFORE BEGINNING WORK IN AREA.
3. CALL THE TEXAS STATE WIDE ONE CALL LOCATOR NUMBER 1-800-344-8377 48 HOURS BEFORE BEGINNING ANY EXCAVATION.

   DUE TO FEDERAL REGULATION TITLE 49, PART 192.181, CPS MUST MAINTAIN ACCESS TO GAS VALVES AT ALL TIMES. THE CONTRACTOR MUST PROTECT AND WORK AROUND ANY GAS VALVES THAT ARE IN THE PROJECT AREA.

   THE CONTRACTOR WILL BE RESPONSIBLE FOR PROTECTING ALL EXISTING UTILITIES ADJACENT TO THE WORK AREA.
4. SEE CROSS STREET PLAN AND PROFILE SHEETS AND INTERSECTION LAYOUT SHEETS FOR ADDITIONAL INFORMATION AT THE CROSS STREET.
5. SEE DRIVEWAY SUMMARY FOR ADDITIONAL INFORMATION PERTAINING TO DRIVEWAYS.

PRELIMINARY

90% SUBMITTAL
FOR INTERIM REVIEW ONLY
NOT FOR CONSTRUCTION, BIDDING, OR PERMIT PURPOSES.

CP&Y

ENGINEER JAIME AGUILAR
P.E. No. 87606 DATE 2/23/2017

BEXAR COUNTY
PUBLIC WORKS DEPARTMENT

NO	DATE	DESCRIPTION	DWG	CHK

REVISIONS

CP&Y
12500 SAN PEDRO AVENUE, SUITE 450
SAN ANTONIO, TEXAS 78216
TEL (210) 494-8004
FAX (210) 494-8286
T.B.P.E. FIRM # 1741

TALLEY ROAD

CROSS SECTIONS

SHEET 51 OF 88

PROJECT NUMBER:		SHEET NO.	
		599	
DESIGNED BY:	CP&Y	ROADWAY/HIGHWAY:	
CHECKED BY:	CP&Y	TALLEY ROAD	
DRAWN BY:	CP&Y	STATE	COUNTY
CHECKED BY:	CP&Y	TEXAS	BEXAR

cpybw_ANSIB.tbl
cpypdf_ANSIB.pltcfg
pw:/Active Projects/BEXA14048.01/8.00 Plans and Drawings/8.10 Base Files/14048RDxsec_90.dgn
2/23/2017 4:31:21 PM mberan
pw:/Active Projects/BEXA14048.01/8.00 Plans and Drawings/8.10 Base Files/14048RDxsec_90.dgn

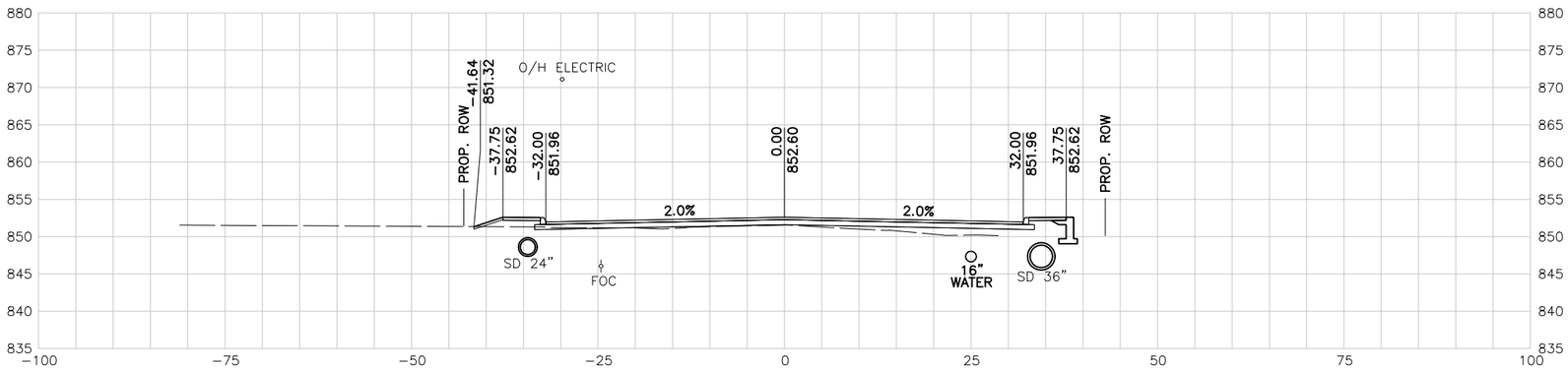

176+50.00 R1

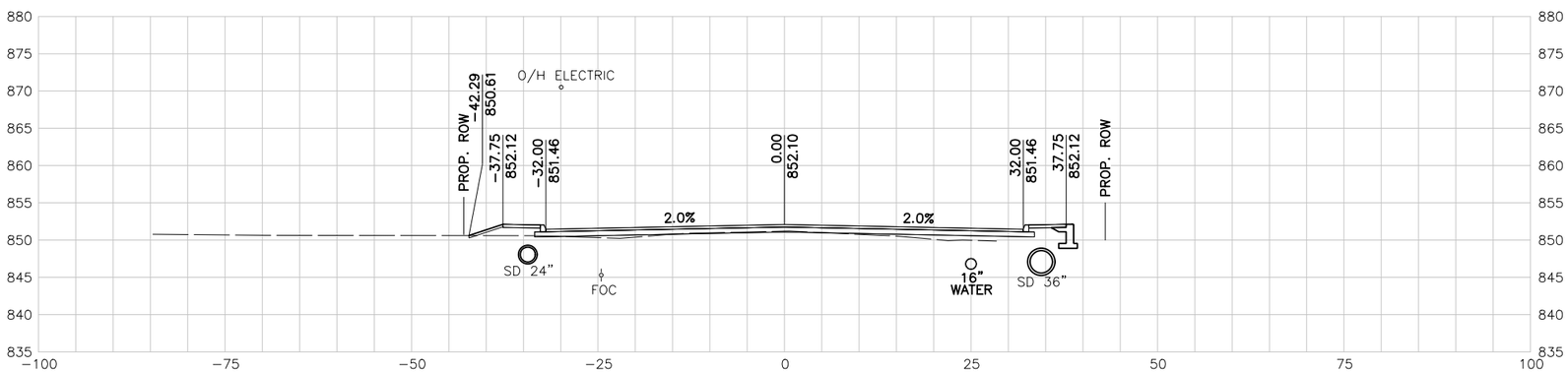

176+00.00 R1

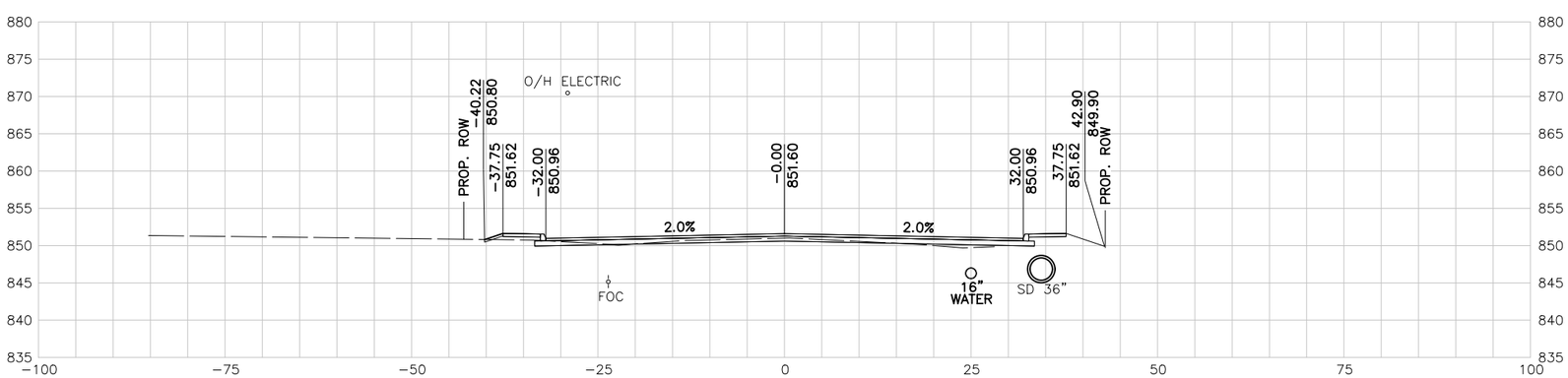

175+50.00 R1

10 5 0 10 20
SCALE FEET

NOTES:

1. UTILITY LOCATIONS ARE APPROXIMATE AND ARE SHOWN FROM THE BEST INFORMATION PROVIDED BY THE UTILITY COMPANIES AT THE TIME PLANS WERE PREPARED.
2. CONTRACTOR SHALL NOTIFY UTILITY COMPANIES AND LOCATE UTILITIES A MINIMUM OF 48 HOURS BEFORE BEGINNING WORK IN AREA.
3. CALL THE TEXAS STATE WIDE ONE CALL LOCATOR NUMBER 1-800-344-8377 48 HOURS BEFORE BEGINNING ANY EXCAVATION.

   DUE TO FEDERAL REGULATION TITLE 49, PART 192.181, CPS MUST MAINTAIN ACCESS TO GAS VALVES AT ALL TIMES. THE CONTRACTOR MUST PROTECT AND WORK AROUND ANY GAS VALVES THAT ARE IN THE PROJECT AREA.

   THE CONTRACTOR WILL BE RESPONSIBLE FOR PROTECTING ALL EXISTING UTILITIES ADJACENT TO THE WORK AREA.
4. SEE CROSS STREET PLAN AND PROFILE SHEETS AND INTERSECTION LAYOUT SHEETS FOR ADDITIONAL INFORMATION AT THE CROSS STREET.
5. SEE DRIVEWAY SUMMARY FOR ADDITIONAL INFORMATION PERTAINING TO DRIVEWAYS.

PRELIMINARY

90% SUBMITTAL
FOR INTERIM REVIEW ONLY
NOT FOR CONSTRUCTION, BIDDING, OR PERMIT PURPOSES.

CP&Y

ENGINEER JAIME AGUILAR
P.E. No. 87606 DATE 2/23/2017

BEXAR COUNTY
PUBLIC WORKS DEPARTMENT

NO	DATE	DESCRIPTION	DWG	CHK

REVISIONS

CP&Y
12500 SAN PEDRO AVENUE, SUITE 450
SAN ANTONIO, TEXAS 78216
TEL (210) 494-8004
FAX (210) 494-8286
T.B.P.E. FIRM # 1741

TALLEY ROAD

CROSS SECTIONS

SHEET 52 OF 88

PROJECT NUMBER:		SHEET NO.	
		600	
DESIGNED BY:	CP&Y	ROADWAY/HIGHWAY:	
CHECKED BY:	CP&Y	TALLEY ROAD	
DRAWN BY:	CP&Y	STATE	COUNTY
CHECKED BY:	CP&Y	TEXAS	BEXAR

cpybw_ANSIB.tbl
cpypdf_ANSIB.pltcfg
pw:/Active Projects/BEXA14048.01/8.00 Plans and Drawings/8.10 Base Files/14048RDxsec_90.dgn
2/23/2017 4:31:21 PM mberan
pw:/Active Projects/BEXA14048.01/8.00 Plans and Drawings/8.10 Base Files/14048RDxsec_90.dgn

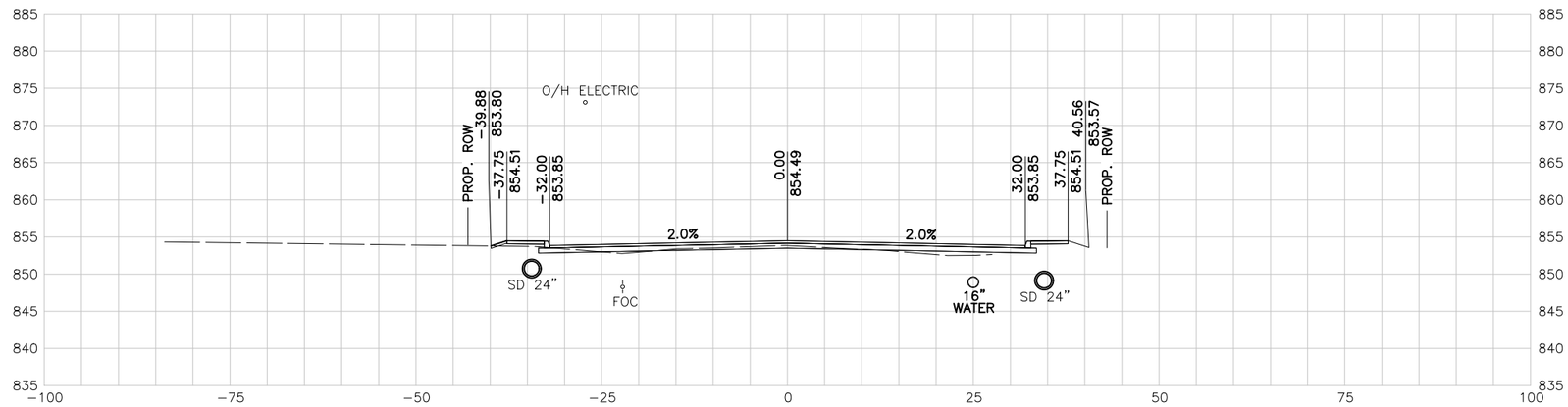

178+00.00 R1

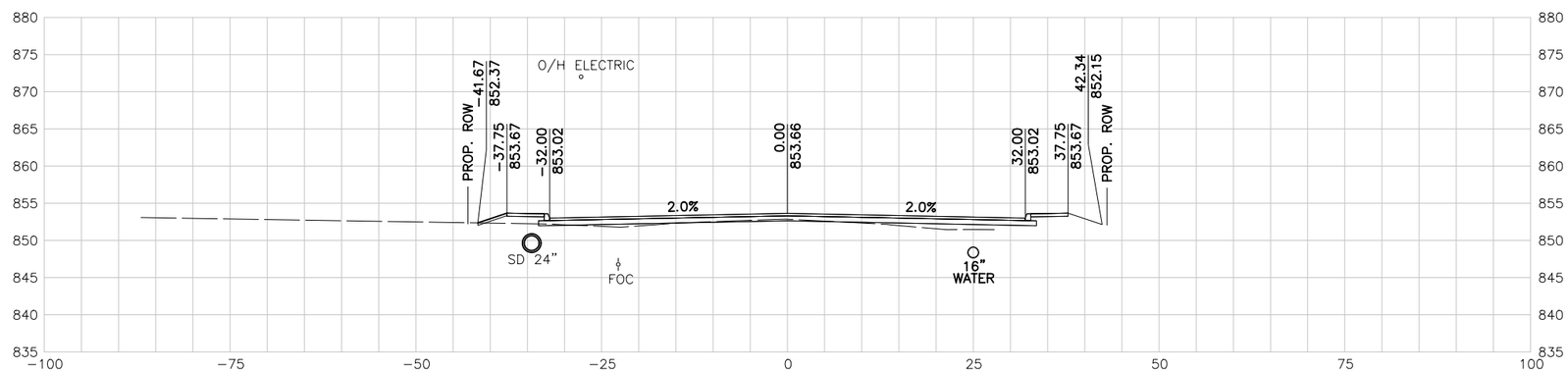

177+50.00 R1

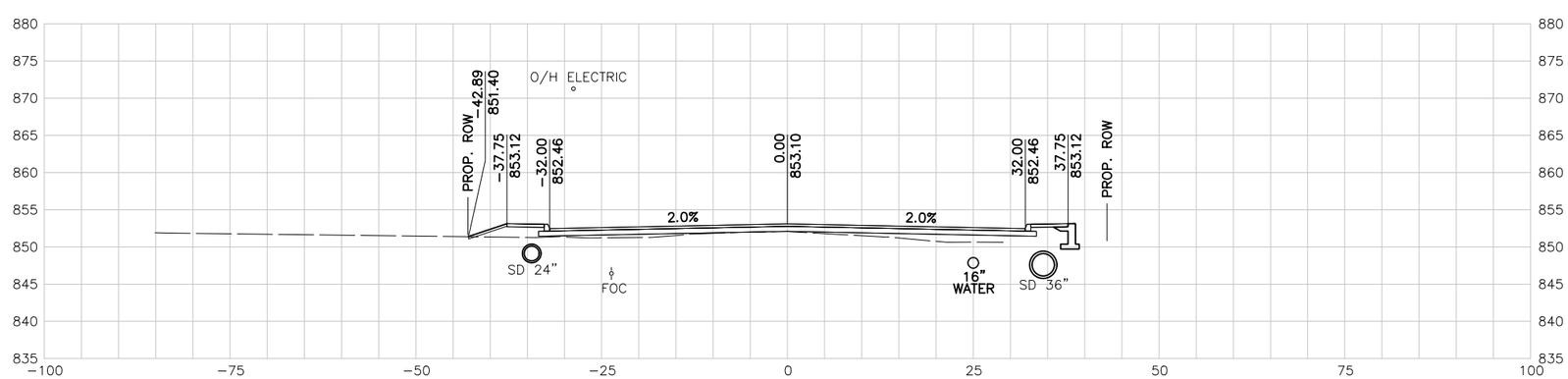

177+00.00 R1

10 5 0 10 20
SCALE FEET

NOTES:

1. UTILITY LOCATIONS ARE APPROXIMATE AND ARE SHOWN FROM THE BEST INFORMATION PROVIDED BY THE UTILITY COMPANIES AT THE TIME PLANS WERE PREPARED.
2. CONTRACTOR SHALL NOTIFY UTILITY COMPANIES AND LOCATE UTILITIES A MINIMUM OF 48 HOURS BEFORE BEGINNING WORK IN AREA.
3. CALL THE TEXAS STATE WIDE ONE CALL LOCATOR NUMBER 1-800-344-8377 48 HOURS BEFORE BEGINNING ANY EXCAVATION.

   DUE TO FEDERAL REGULATION TITLE 49, PART 192.181, CPS MUST MAINTAIN ACCESS TO GAS VALVES AT ALL TIMES. THE CONTRACTOR MUST PROTECT AND WORK AROUND ANY GAS VALVES THAT ARE IN THE PROJECT AREA.

   THE CONTRACTOR WILL BE RESPONSIBLE FOR PROTECTING ALL EXISTING UTILITIES ADJACENT TO THE WORK AREA.
4. SEE CROSS STREET PLAN AND PROFILE SHEETS AND INTERSECTION LAYOUT SHEETS FOR ADDITIONAL INFORMATION AT THE CROSS STREET.
5. SEE DRIVEWAY SUMMARY FOR ADDITIONAL INFORMATION PERTAINING TO DRIVEWAYS.

PRELIMINARY

90% SUBMITTAL
FOR INTERIM REVIEW ONLY
NOT FOR CONSTRUCTION, BIDDING, OR PERMIT PURPOSES.

CP&Y

ENGINEER JAIME AGUILAR
P.E. No. 87606 DATE 2/23/2017

BEXAR COUNTY
PUBLIC WORKS DEPARTMENT

NO	DATE	DESCRIPTION	DWG	CHK

REVISIONS

CP&Y
12500 SAN PEDRO AVENUE, SUITE 450
SAN ANTONIO, TEXAS 78216
TEL (210) 494-8004
FAX (210) 494-8286
T.B.P.E. FIRM # 1741

TALLEY ROAD

CROSS SECTIONS

SHEET 53 OF 88

PROJECT NUMBER:		SHEET NO.	
		601	
DESIGNED BY:	CP&Y	ROADWAY/HIGHWAY:	
CHECKED BY:	CP&Y	TALLEY ROAD	
DRAWN BY:	CP&Y	STATE	COUNTY
CHECKED BY:	CP&Y	TEXAS	BEXAR

2/23/2017 4:31:22 PM mberan
cpybw_ANSIB.tbl
cpypdf_ANSIB.pltcfg
pw:/Active Projects/BEXA14048.01/8.00 Plans and Drawings/8.10 Base Files/14048RDxsec_90.dgn

pw:/Active Projects/BEXA14048.01/8.00 Plans and Drawings/8.10 Base Files/14048RDxsec_90.dgn

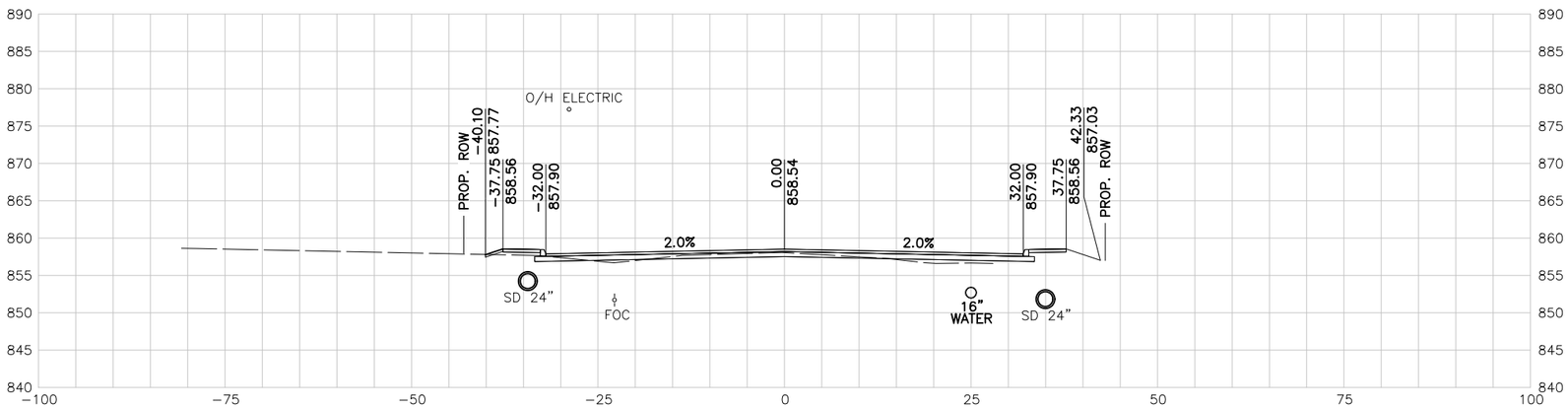

179+50.00 R1

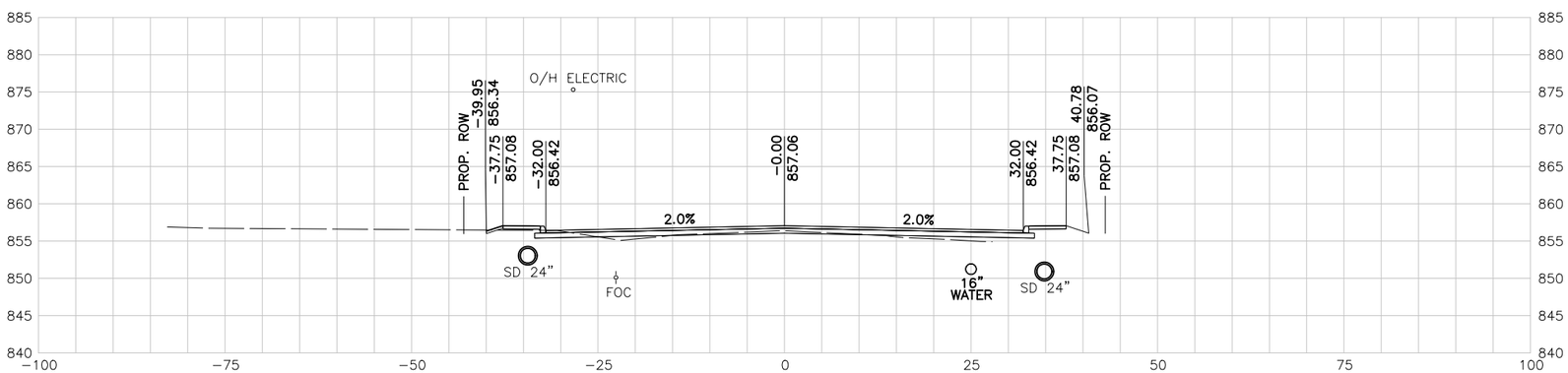

179+00.00 R1

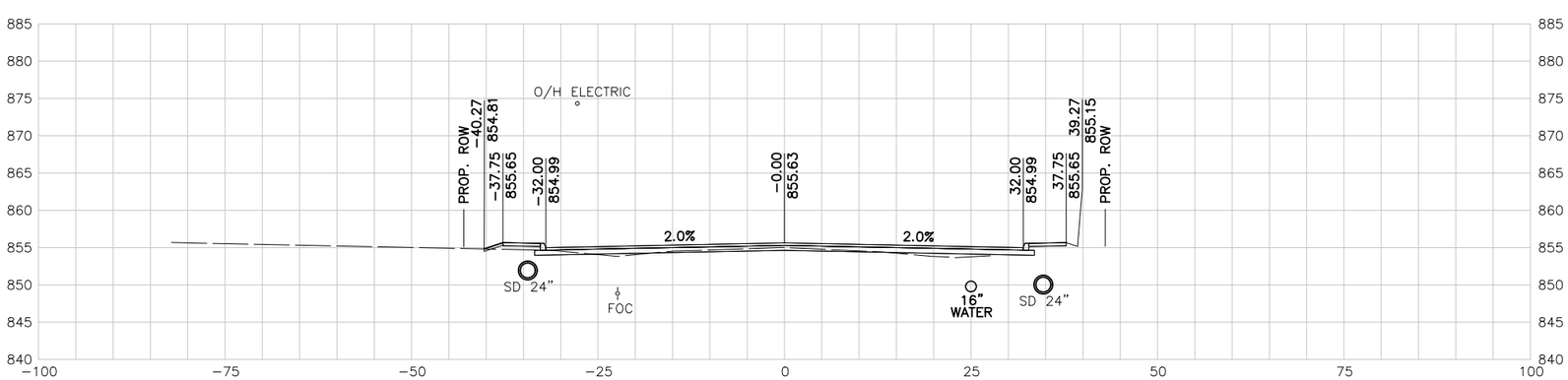

178+50.00 R1

10 5 0 10 20
SCALE FEET

NOTES:

1. UTILITY LOCATIONS ARE APPROXIMATE AND ARE SHOWN FROM THE BEST INFORMATION PROVIDED BY THE UTILITY COMPANIES AT THE TIME PLANS WERE PREPARED.
2. CONTRACTOR SHALL NOTIFY UTILITY COMPANIES AND LOCATE UTILITIES A MINIMUM OF 48 HOURS BEFORE BEGINNING WORK IN AREA.
3. CALL THE TEXAS STATE WIDE ONE CALL LOCATOR NUMBER 1-800-344-8377 48 HOURS BEFORE BEGINNING ANY EXCAVATION.

   DUE TO FEDERAL REGULATION TITLE 49, PART 192.181, CPS MUST MAINTAIN ACCESS TO GAS VALVES AT ALL TIMES. THE CONTRACTOR MUST PROTECT AND WORK AROUND ANY GAS VALVES THAT ARE IN THE PROJECT AREA.

   THE CONTRACTOR WILL BE RESPONSIBLE FOR PROTECTING ALL EXISTING UTILITIES ADJACENT TO THE WORK AREA.
4. SEE CROSS STREET PLAN AND PROFILE SHEETS AND INTERSECTION LAYOUT SHEETS FOR ADDITIONAL INFORMATION AT THE CROSS STREET.
5. SEE DRIVEWAY SUMMARY FOR ADDITIONAL INFORMATION PERTAINING TO DRIVEWAYS.

PRELIMINARY

90% SUBMITTAL
FOR INTERIM REVIEW ONLY
NOT FOR CONSTRUCTION, BIDDING, OR PERMIT PURPOSES.

CP&Y

ENGINEER JAIME AGUILAR
P.E. No. 87606 DATE 2/23/2017

BEXAR COUNTY
PUBLIC WORKS DEPARTMENT

NO	DATE	DESCRIPTION	DWG	CHK

REVISIONS

CP&Y
12500 SAN PEDRO AVENUE, SUITE 450
SAN ANTONIO, TEXAS 78216
TEL (210) 494-8004
FAX (210) 494-8286
T.B.P.E. FIRM # 1741

TALLEY ROAD

CROSS SECTIONS

SHEET 54 OF 88

PROJECT NUMBER:		SHEET NO.	
		602	
DESIGNED BY:	CP&Y	ROADWAY/HIGHWAY:	
CHECKED BY:	CP&Y	TALLEY ROAD	
DRAWN BY:	CP&Y	STATE	COUNTY
CHECKED BY:	CP&Y	TEXAS	BEXAR

2/23/2017 4:31:22 PM mberan
cpybw_ANSIB.tbl
cpypdf_ANSIB.pltcfg
pw:/Active Projects/BEXA14048.01/8.00 Plans and Drawings/8.10 Base Files/14048RDxsec_90.dgn

pw:/Active Projects/BEXA14048.01/8.00 Plans and Drawings/8.10 Base Files/14048RDxsec_90.dgn

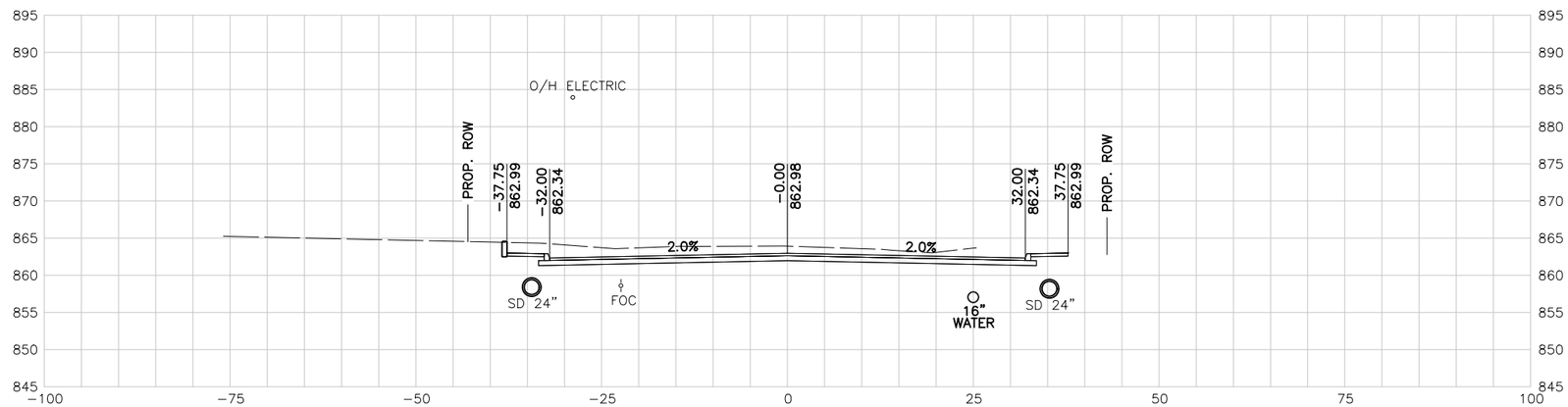

181+00.00 R1

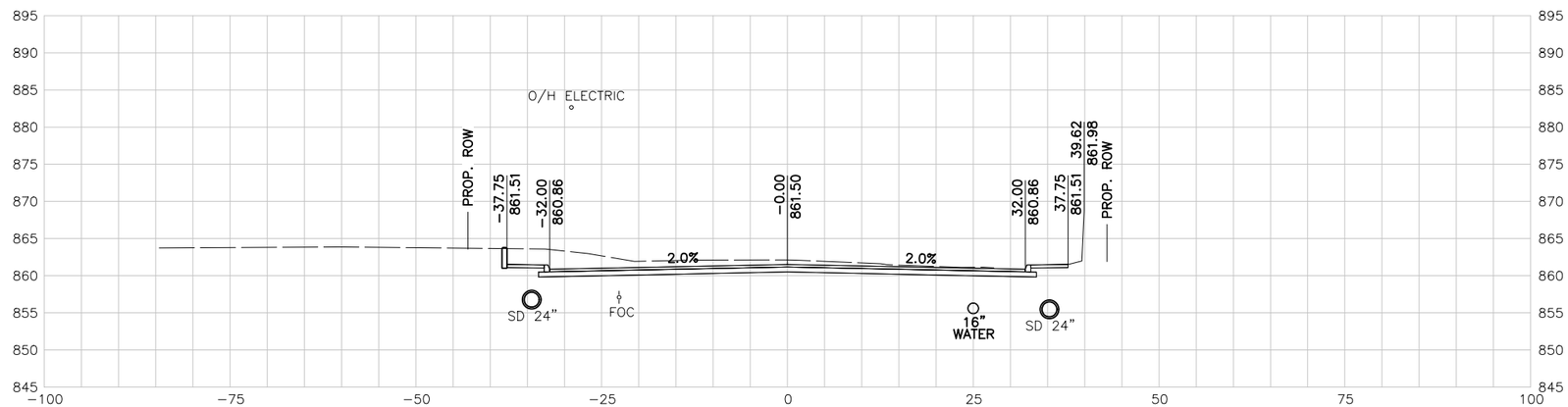

180+50.00 R1

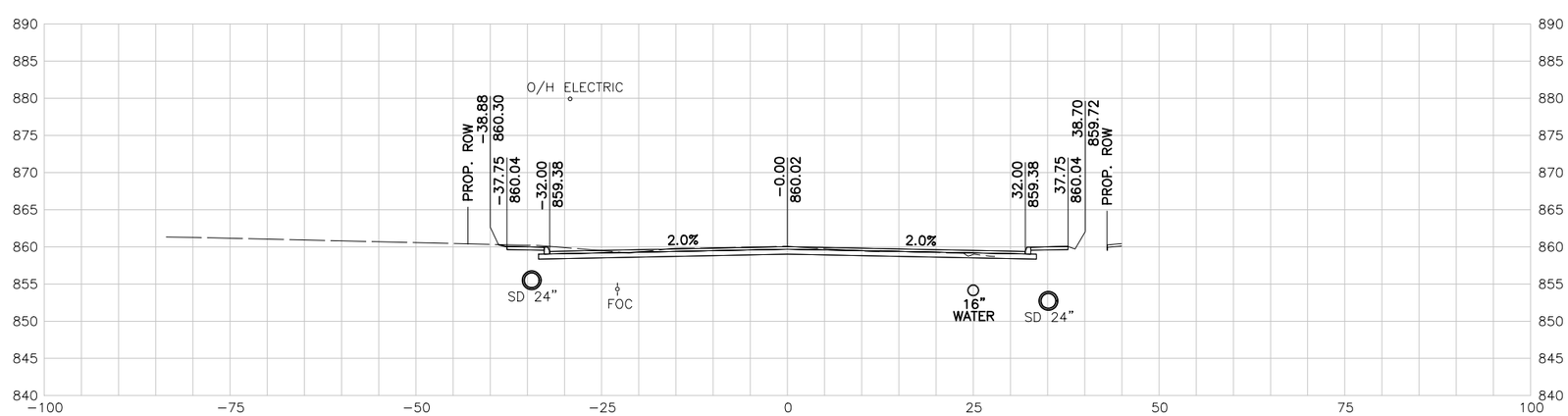

180+00.00 R1

10 5 0 10 20
SCALE FEET

NOTES:

1. UTILITY LOCATIONS ARE APPROXIMATE AND ARE SHOWN FROM THE BEST INFORMATION PROVIDED BY THE UTILITY COMPANIES AT THE TIME PLANS WERE PREPARED.
2. CONTRACTOR SHALL NOTIFY UTILITY COMPANIES AND LOCATE UTILITIES A MINIMUM OF 48 HOURS BEFORE BEGINNING WORK IN AREA.
3. CALL THE TEXAS STATE WIDE ONE CALL LOCATOR NUMBER 1-800-344-8377 48 HOURS BEFORE BEGINNING ANY EXCAVATION.

   DUE TO FEDERAL REGULATION TITLE 49, PART 192.181, CPS MUST MAINTAIN ACCESS TO GAS VALVES AT ALL TIMES. THE CONTRACTOR MUST PROTECT AND WORK AROUND ANY GAS VALVES THAT ARE IN THE PROJECT AREA.

   THE CONTRACTOR WILL BE RESPONSIBLE FOR PROTECTING ALL EXISTING UTILITIES ADJACENT TO THE WORK AREA.
4. SEE CROSS STREET PLAN AND PROFILE SHEETS AND INTERSECTION LAYOUT SHEETS FOR ADDITIONAL INFORMATION AT THE CROSS STREET.
5. SEE DRIVEWAY SUMMARY FOR ADDITIONAL INFORMATION PERTAINING TO DRIVEWAYS.

PRELIMINARY

90% SUBMITTAL
FOR INTERIM REVIEW ONLY
NOT FOR CONSTRUCTION, BIDDING, OR PERMIT PURPOSES.

CP&Y

ENGINEER JAIME AGUILAR
P.E. No. 87606 DATE 2/23/2017

BEXAR COUNTY
PUBLIC WORKS DEPARTMENT

NO	DATE	DESCRIPTION	DWG	CHK

REVISIONS

CP&Y
12500 SAN PEDRO AVENUE, SUITE 450
SAN ANTONIO, TEXAS 78216
TEL (210) 494-8004
FAX (210) 494-8286
T.B.P.E. FIRM # 1741

TALLEY ROAD

CROSS SECTIONS

SHEET 55 OF 88

PROJECT NUMBER:		SHEET NO.	
		603	
DESIGNED BY:	CP&Y	ROADWAY/HIGHWAY:	
CHECKED BY:	CP&Y	TALLEY ROAD	
DRAWN BY:	CP&Y	STATE	COUNTY
CHECKED BY:	CP&Y	TEXAS	BEXAR

cpybw_ANSIB.tbl
cpypdf_ANSIB.pltcfg
pw:/Active Projects/BEXA14048.01/8.00 Plans and Drawings/8.10 Base Files/14048RDxsec_90.dgn
2/23/2017 4:31:23 PM mberan
pw:/Active Projects/BEXA14048.01/8.00 Plans and Drawings/8.10 Base Files/14048RDxsec_90.dgn

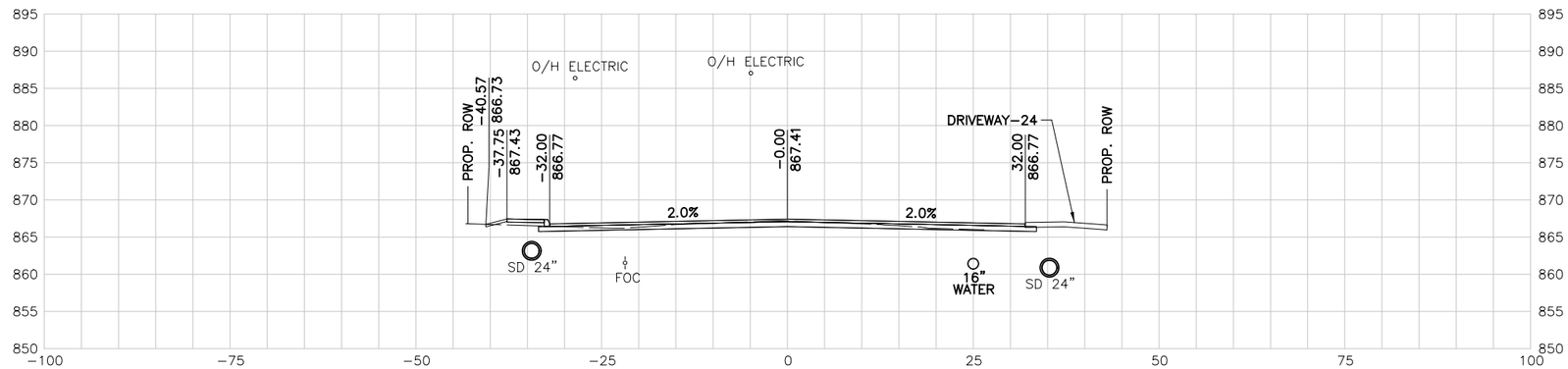

182+50.00 R1

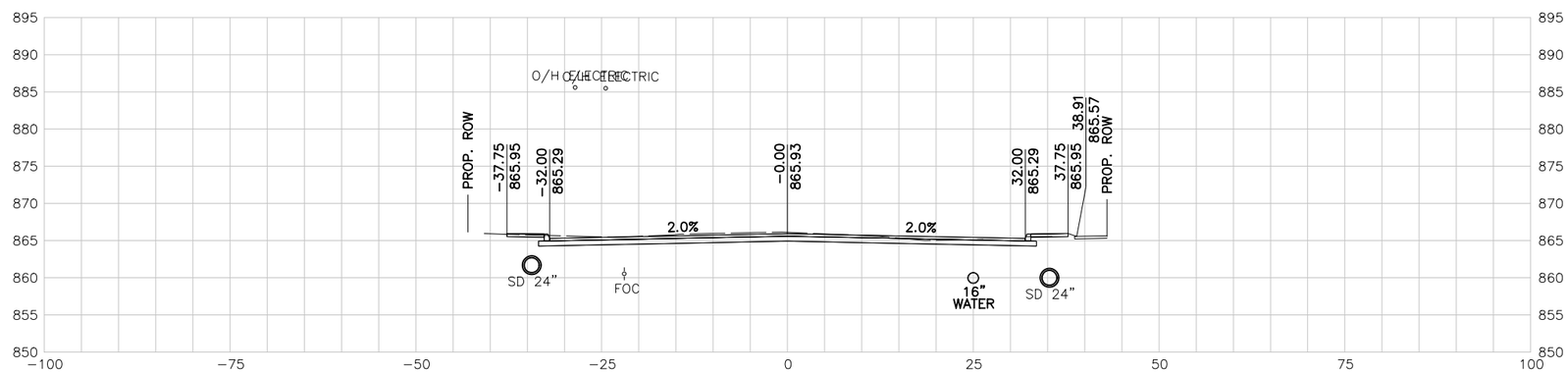

182+00.00 R1

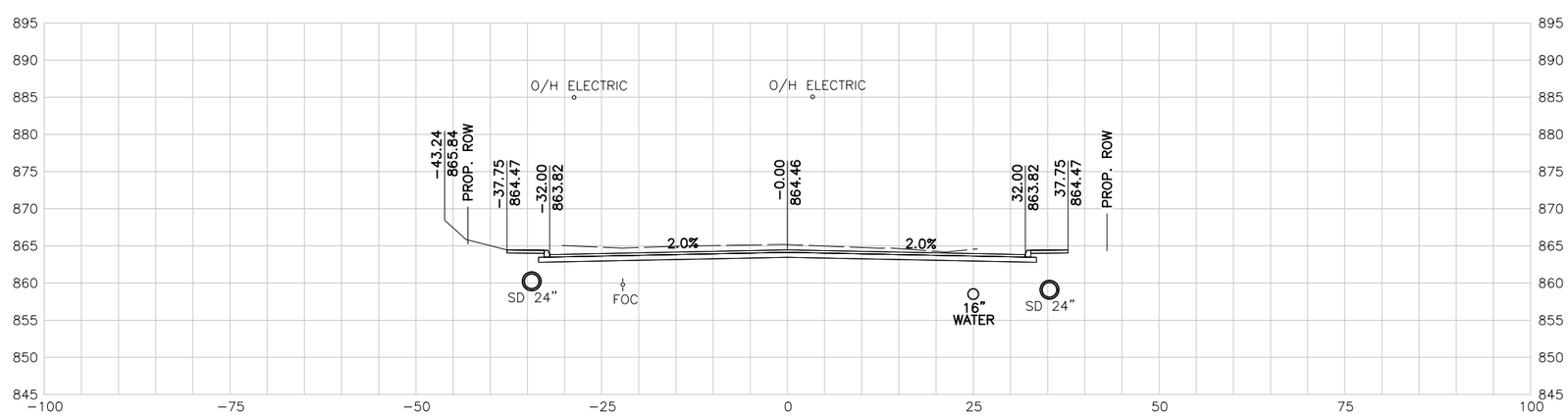

181+50.00 R1

10 5 0 10 20
SCALE FEET

NOTES:

1. UTILITY LOCATIONS ARE APPROXIMATE AND ARE SHOWN FROM THE BEST INFORMATION PROVIDED BY THE UTILITY COMPANIES AT THE TIME PLANS WERE PREPARED.
2. CONTRACTOR SHALL NOTIFY UTILITY COMPANIES AND LOCATE UTILITIES A MINIMUM OF 48 HOURS BEFORE BEGINNING WORK IN AREA.
3. CALL THE TEXAS STATE WIDE ONE CALL LOCATOR NUMBER 1-800-344-8377 48 HOURS BEFORE BEGINNING ANY EXCAVATION.

   DUE TO FEDERAL REGULATION TITLE 49, PART 192.181, CPS MUST MAINTAIN ACCESS TO GAS VALVES AT ALL TIMES. THE CONTRACTOR MUST PROTECT AND WORK AROUND ANY GAS VALVES THAT ARE IN THE PROJECT AREA.

   THE CONTRACTOR WILL BE RESPONSIBLE FOR PROTECTING ALL EXISTING UTILITIES ADJACENT TO THE WORK AREA.
4. SEE CROSS STREET PLAN AND PROFILE SHEETS AND INTERSECTION LAYOUT SHEETS FOR ADDITIONAL INFORMATION AT THE CROSS STREET.
5. SEE DRIVEWAY SUMMARY FOR ADDITIONAL INFORMATION PERTAINING TO DRIVEWAYS.

PRELIMINARY

90% SUBMITTAL
FOR INTERIM REVIEW ONLY
NOT FOR CONSTRUCTION, BIDDING, OR PERMIT PURPOSES.

CP&Y

ENGINEER JAIME AGUILAR
P.E. No. 87606 DATE 2/23/2017

BEXAR COUNTY
PUBLIC WORKS DEPARTMENT

NO	DATE	DESCRIPTION	DWG	CHK

REVISIONS

CP&Y
12500 SAN PEDRO AVENUE, SUITE 450
SAN ANTONIO, TEXAS 78216
TEL (210) 494-8004
FAX (210) 494-8286
T.B.P.E. FIRM # 1741

TALLEY ROAD

CROSS SECTIONS

SHEET 56 OF 88

PROJECT NUMBER:		SHEET NO.
		604
DESIGNED BY: CP&Y	ROADWAY/HIGHWAY:	
CHECKED BY: CP&Y	TALLEY ROAD	
DRAWN BY: CP&Y	STATE	COUNTY
CHECKED BY: CP&Y	TEXAS	BEXAR

2/23/2017 4:31:23 PM mberon cpybw_ANSIB.tbl cpypdf_ANSIB.pltcfg pw:/Active Projects/BEXA14048.01/8.00 Plans and Drawings/8.10 Base Files/14048RDxsec_90.dgn
pw:/Active Projects/BEXA14048.01/8.00 Plans and Drawings/8.10 Base Files/14048RDxsec_90.dgn

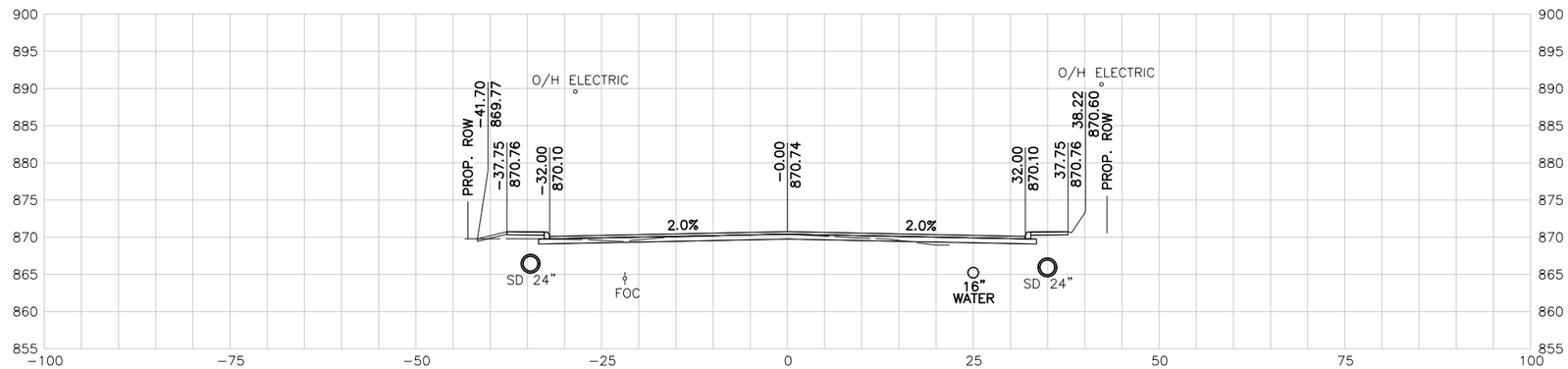

184+00.00 R1

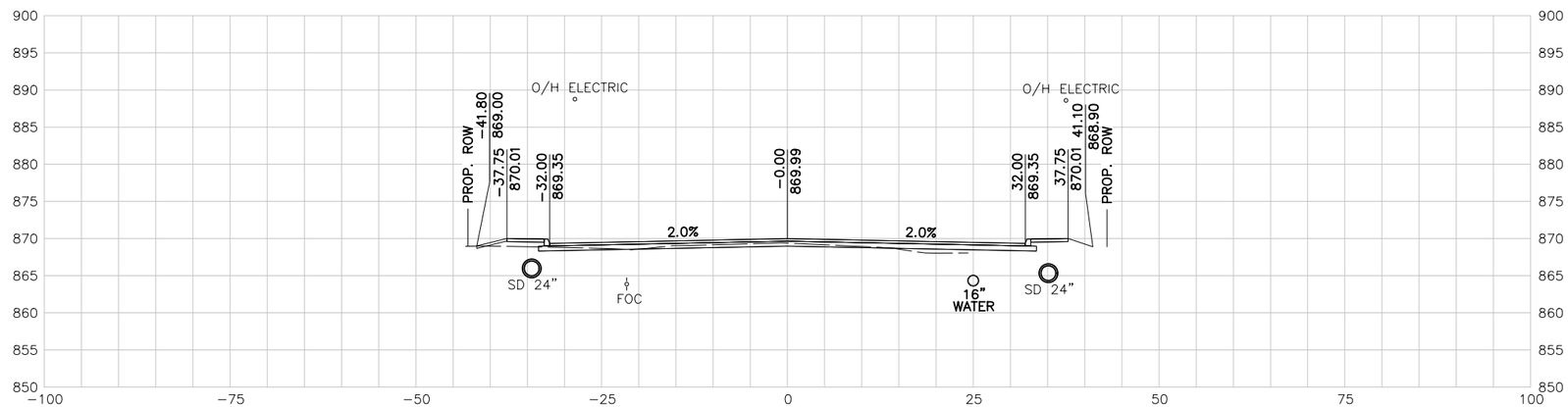

183+50.00 R1

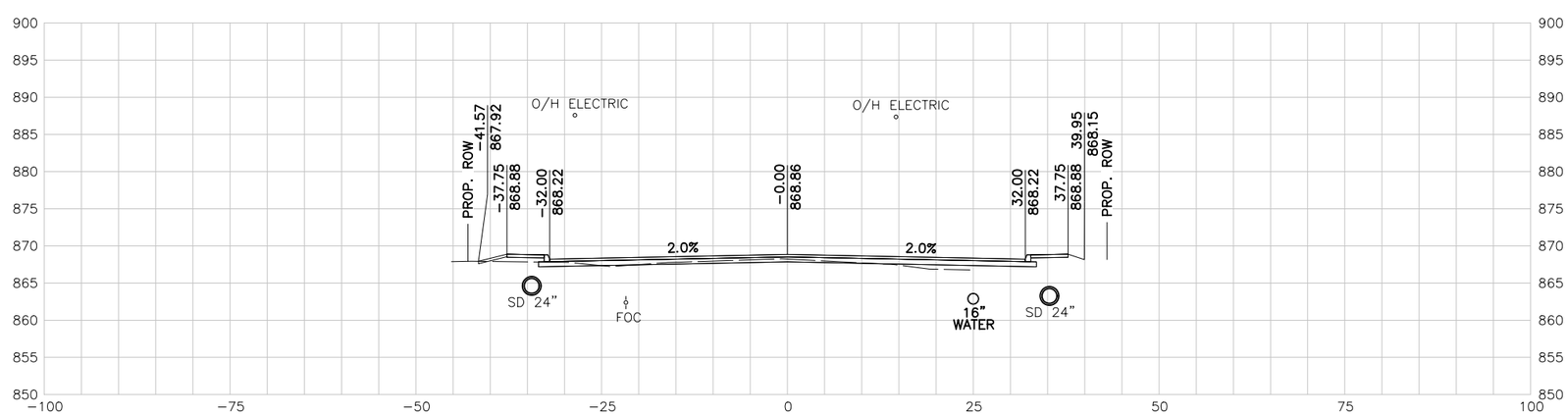

183+00.00 R1

10 5 0 10 20
SCALE FEET

NOTES:

1. UTILITY LOCATIONS ARE APPROXIMATE AND ARE SHOWN FROM THE BEST INFORMATION PROVIDED BY THE UTILITY COMPANIES AT THE TIME PLANS WERE PREPARED.
2. CONTRACTOR SHALL NOTIFY UTILITY COMPANIES AND LOCATE UTILITIES A MINIMUM OF 48 HOURS BEFORE BEGINNING WORK IN AREA.
3. CALL THE TEXAS STATE WIDE ONE CALL LOCATOR NUMBER 1-800-344-8377 48 HOURS BEFORE BEGINNING ANY EXCAVATION.

   DUE TO FEDERAL REGULATION TITLE 49, PART 192.181, CPS MUST MAINTAIN ACCESS TO GAS VALVES AT ALL TIMES. THE CONTRACTOR MUST PROTECT AND WORK AROUND ANY GAS VALVES THAT ARE IN THE PROJECT AREA.

   THE CONTRACTOR WILL BE RESPONSIBLE FOR PROTECTING ALL EXISTING UTILITIES ADJACENT TO THE WORK AREA.
4. SEE CROSS STREET PLAN AND PROFILE SHEETS AND INTERSECTION LAYOUT SHEETS FOR ADDITIONAL INFORMATION AT THE CROSS STREET.
5. SEE DRIVEWAY SUMMARY FOR ADDITIONAL INFORMATION PERTAINING TO DRIVEWAYS.

PRELIMINARY

90% SUBMITTAL
FOR INTERIM REVIEW ONLY
NOT FOR CONSTRUCTION, BIDDING, OR PERMIT PURPOSES.

CP&Y

ENGINEER JAIME AGUILAR
P.E. No. 87606 DATE 2/23/2017

BEXAR COUNTY
PUBLIC WORKS DEPARTMENT

NO	DATE	DESCRIPTION	DWG	CHK

REVISIONS

CP&Y
12500 SAN PEDRO AVENUE, SUITE 450
SAN ANTONIO, TEXAS 78216
TEL (210) 494-8004
FAX (210) 494-8286
T.B.P.E. FIRM # 1741

TALLEY ROAD

CROSS SECTIONS

SHEET 57 OF 88

PROJECT NUMBER:		SHEET NO.	
		605	
DESIGNED BY:	CP&Y	ROADWAY/HIGHWAY:	
CHECKED BY:	CP&Y	TALLEY ROAD	
DRAWN BY:	CP&Y	STATE	COUNTY
CHECKED BY:	CP&Y	TEXAS	BEXAR

cpybw_ANSIB.tbl
cpypdf_ANSIB.pltcfg
pw:/Active Projects/BEXA14048.01/8.00 Plans and Drawings/8.10 Base Files/14048RDxsec_90.dgn
2/23/2017 4:31:24 PM mberon
pw:/Active Projects/BEXA14048.01/8.00 Plans and Drawings/8.10 Base Files/14048RDxsec_90.dgn

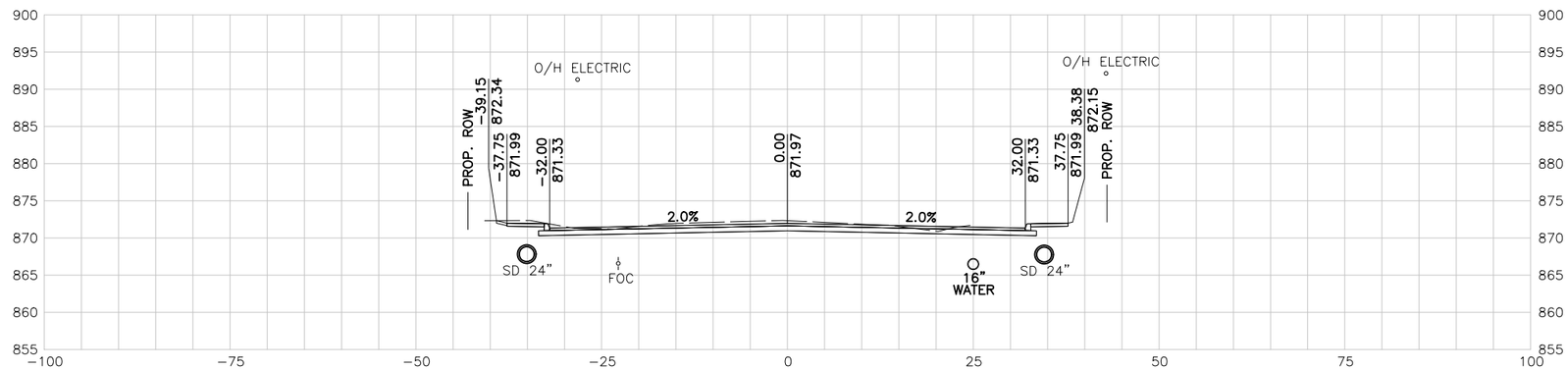

185+50.00 R1

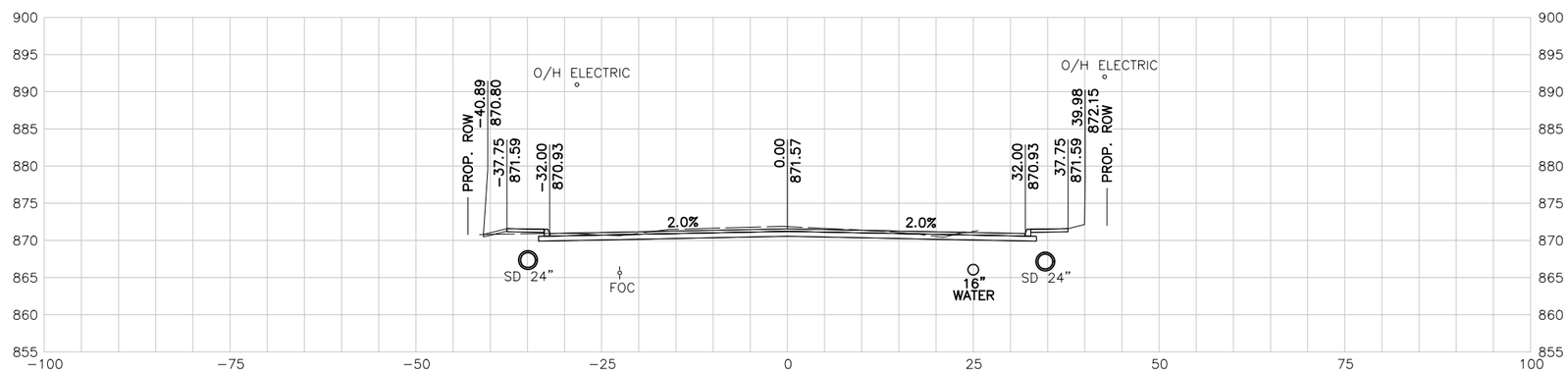

185+00.00 R1

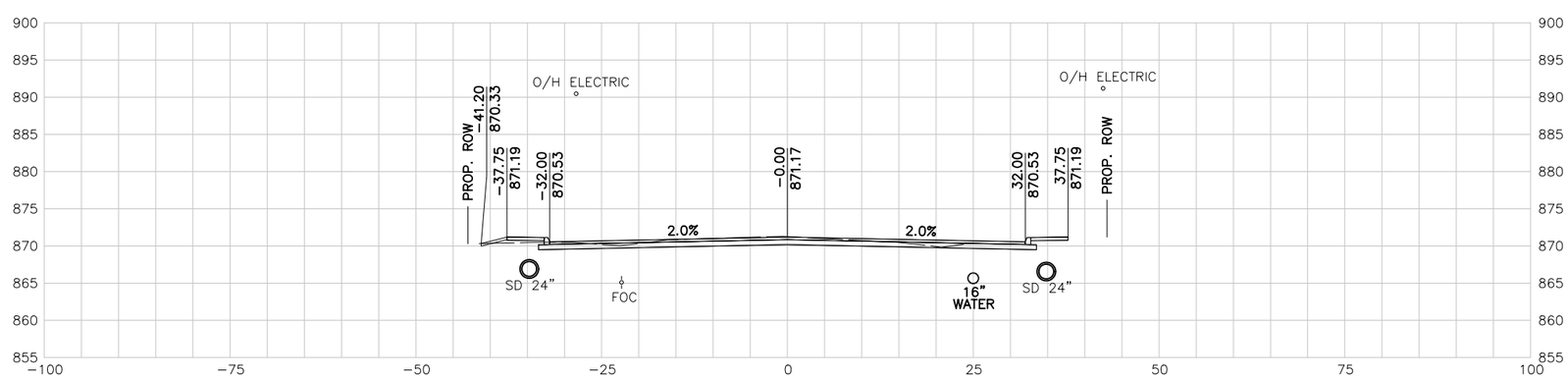

184+50.00 R1

10 5 0 10 20
SCALE FEET

NOTES:

1. UTILITY LOCATIONS ARE APPROXIMATE AND ARE SHOWN FROM THE BEST INFORMATION PROVIDED BY THE UTILITY COMPANIES AT THE TIME PLANS WERE PREPARED.
2. CONTRACTOR SHALL NOTIFY UTILITY COMPANIES AND LOCATE UTILITIES A MINIMUM OF 48 HOURS BEFORE BEGINNING WORK IN AREA.
3. CALL THE TEXAS STATE WIDE ONE CALL LOCATOR NUMBER 1-800-344-8377 48 HOURS BEFORE BEGINNING ANY EXCAVATION.

   DUE TO FEDERAL REGULATION TITLE 49, PART 192.181, CPS MUST MAINTAIN ACCESS TO GAS VALVES AT ALL TIMES. THE CONTRACTOR MUST PROTECT AND WORK AROUND ANY GAS VALVES THAT ARE IN THE PROJECT AREA.

   THE CONTRACTOR WILL BE RESPONSIBLE FOR PROTECTING ALL EXISTING UTILITIES ADJACENT TO THE WORK AREA.
4. SEE CROSS STREET PLAN AND PROFILE SHEETS AND INTERSECTION LAYOUT SHEETS FOR ADDITIONAL INFORMATION AT THE CROSS STREET.
5. SEE DRIVEWAY SUMMARY FOR ADDITIONAL INFORMATION PERTAINING TO DRIVEWAYS.

PRELIMINARY

90% SUBMITTAL
FOR INTERIM REVIEW ONLY
NOT FOR CONSTRUCTION, BIDDING, OR PERMIT PURPOSES.

CP&Y

ENGINEER JAIME AGUILAR
P.E. No. 87606 DATE 2/23/2017

BEXAR COUNTY
PUBLIC WORKS DEPARTMENT

NO	DATE	DESCRIPTION	DWG	CHK

REVISIONS

CP&Y
12500 SAN PEDRO AVENUE, SUITE 450
SAN ANTONIO, TEXAS 78216
TEL (210) 494-8004
FAX (210) 494-8286
T.B.P.E. FIRM # 1741

TALLEY ROAD

CROSS SECTIONS

SHEET 58 OF 88

PROJECT NUMBER:		SHEET NO.
		606
DESIGNED BY:	CP&Y	ROADWAY/HIGHWAY:
CHECKED BY:	CP&Y	TALLEY ROAD
DRAWN BY:	CP&Y	STATE / COUNTY
CHECKED BY:	CP&Y	TEXAS / BEXAR

cpybw_ANSIB.tbl
cpypdf_ANSIB.pltcfg
pw:/Active Projects/BEXA14048.01/8.00 Plans and Drawings/8.10 Base Files/14048RDxsec_90.dgn
2/23/2017 4:31:24 PM mberon
pw:/Active Projects/BEXA14048.01/8.00 Plans and Drawings/8.10 Base Files/14048RDxsec_90.dgn

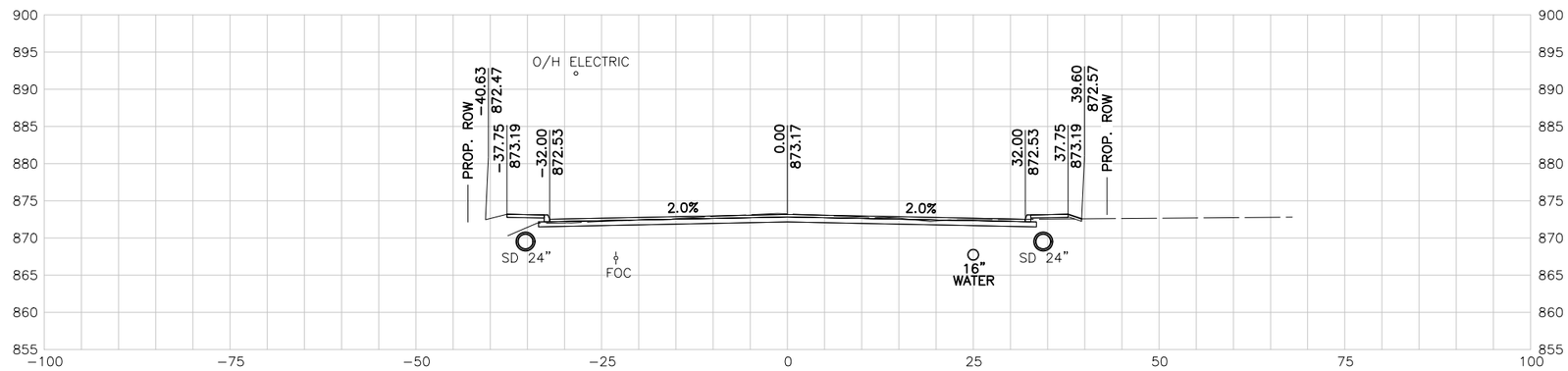

187+00.00 R1

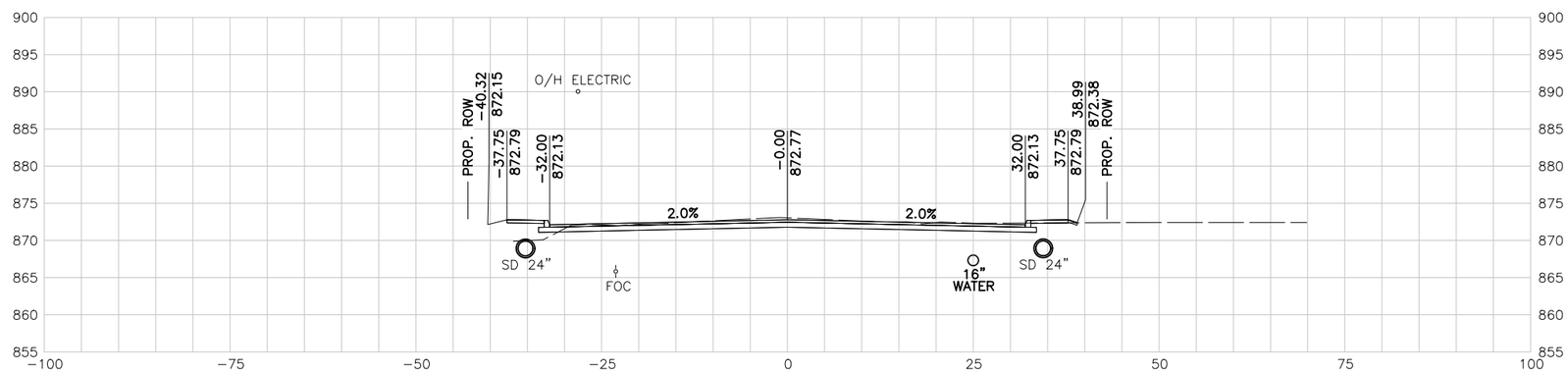

186+50.00 R1

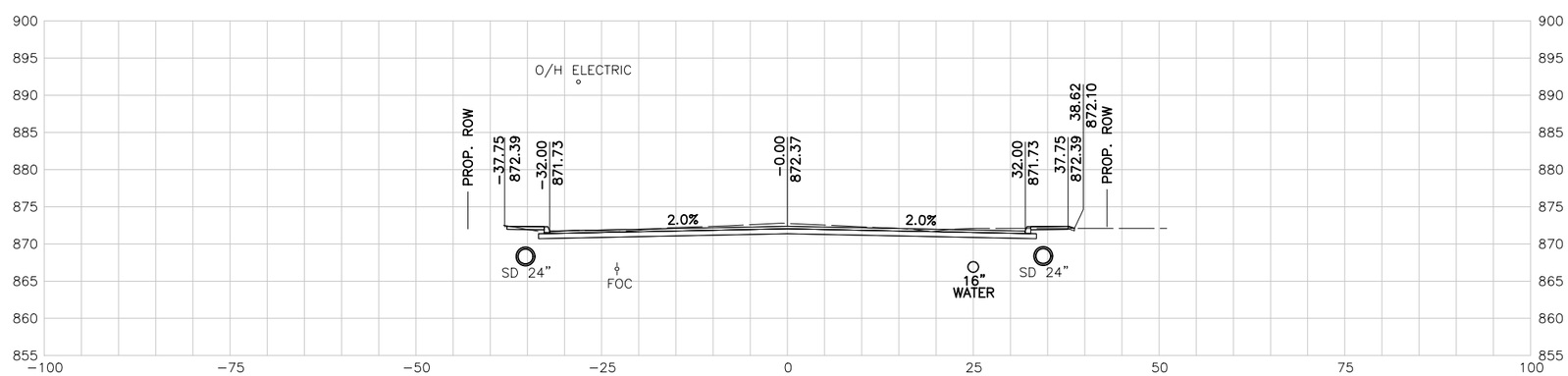

186+00.00 R1

10 5 0 10 20
SCALE FEET

NOTES:

1. UTILITY LOCATIONS ARE APPROXIMATE AND ARE SHOWN FROM THE BEST INFORMATION PROVIDED BY THE UTILITY COMPANIES AT THE TIME PLANS WERE PREPARED.
2. CONTRACTOR SHALL NOTIFY UTILITY COMPANIES AND LOCATE UTILITIES A MINIMUM OF 48 HOURS BEFORE BEGINNING WORK IN AREA.
3. CALL THE TEXAS STATE WIDE ONE CALL LOCATOR NUMBER 1-800-344-8377 48 HOURS BEFORE BEGINNING ANY EXCAVATION.

   DUE TO FEDERAL REGULATION TITLE 49, PART 192.181, CPS MUST MAINTAIN ACCESS TO GAS VALVES AT ALL TIMES. THE CONTRACTOR MUST PROTECT AND WORK AROUND ANY GAS VALVES THAT ARE IN THE PROJECT AREA.

   THE CONTRACTOR WILL BE RESPONSIBLE FOR PROTECTING ALL EXISTING UTILITIES ADJACENT TO THE WORK AREA.
4. SEE CROSS STREET PLAN AND PROFILE SHEETS AND INTERSECTION LAYOUT SHEETS FOR ADDITIONAL INFORMATION AT THE CROSS STREET.
5. SEE DRIVEWAY SUMMARY FOR ADDITIONAL INFORMATION PERTAINING TO DRIVEWAYS.

PRELIMINARY

90% SUBMITTAL
FOR INTERIM REVIEW ONLY
NOT FOR CONSTRUCTION, BIDDING, OR PERMIT PURPOSES.

CP&Y

ENGINEER JAIME AGUILAR
P.E. No. 87606 DATE 2/23/2017

BEXAR COUNTY
PUBLIC WORKS DEPARTMENT

NO	DATE	DESCRIPTION	DWG	CHK

REVISIONS

CP&Y
12500 SAN PEDRO AVENUE, SUITE 450
SAN ANTONIO, TEXAS 78216
TEL (210) 494-8004
FAX (210) 494-8286
T.B.P.E. FIRM # 1741

TALLEY ROAD

CROSS SECTIONS

SHEET 59 OF 88

PROJECT NUMBER:		SHEET NO.	
		607	
DESIGNED BY:	CP&Y	ROADWAY/HIGHWAY:	
CHECKED BY:	CP&Y	TALLEY ROAD	
DRAWN BY:	CP&Y	STATE	COUNTY
CHECKED BY:	CP&Y	TEXAS	BEXAR

cpybw_ANSIB.tbl
cpypdf_ANSIB.pltcfg
pw:/Active Projects/BEXA14048.01/8.00 Plans and Drawings/8.10 Base Files/14048RDxsec_90.dgn
2/23/2017 4:31:25 PM mberon
pw:/Active Projects/BEXA14048.01/8.00 Plans and Drawings/8.10 Base Files/14048RDxsec_90.dgn

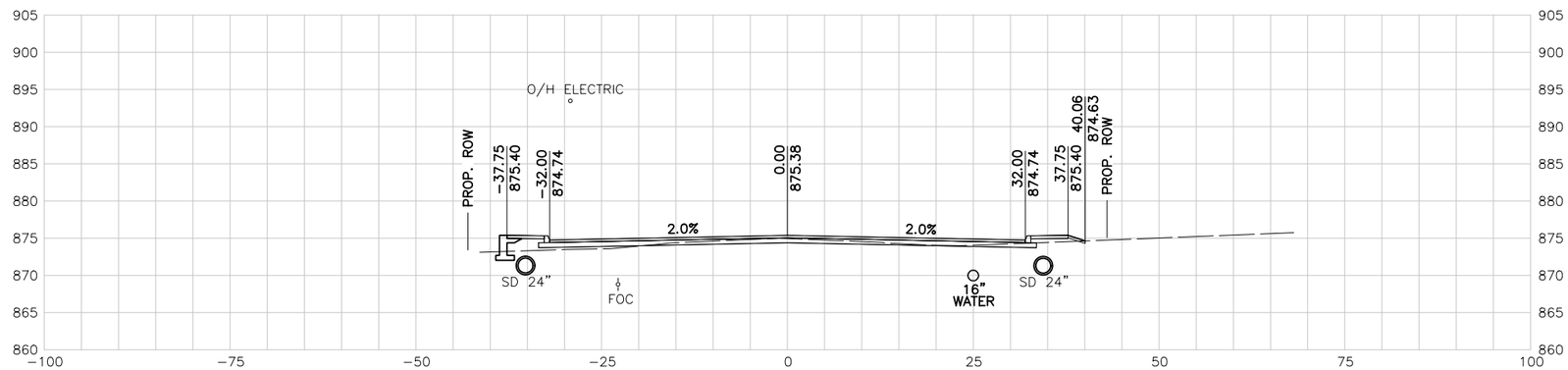

188+50.00 R1

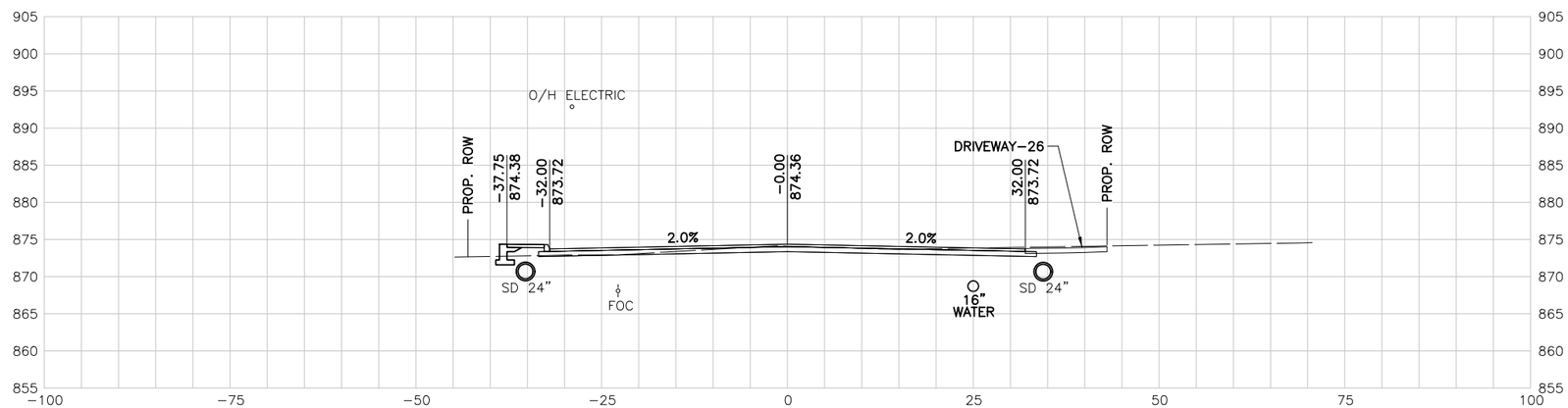

188+00.00 R1

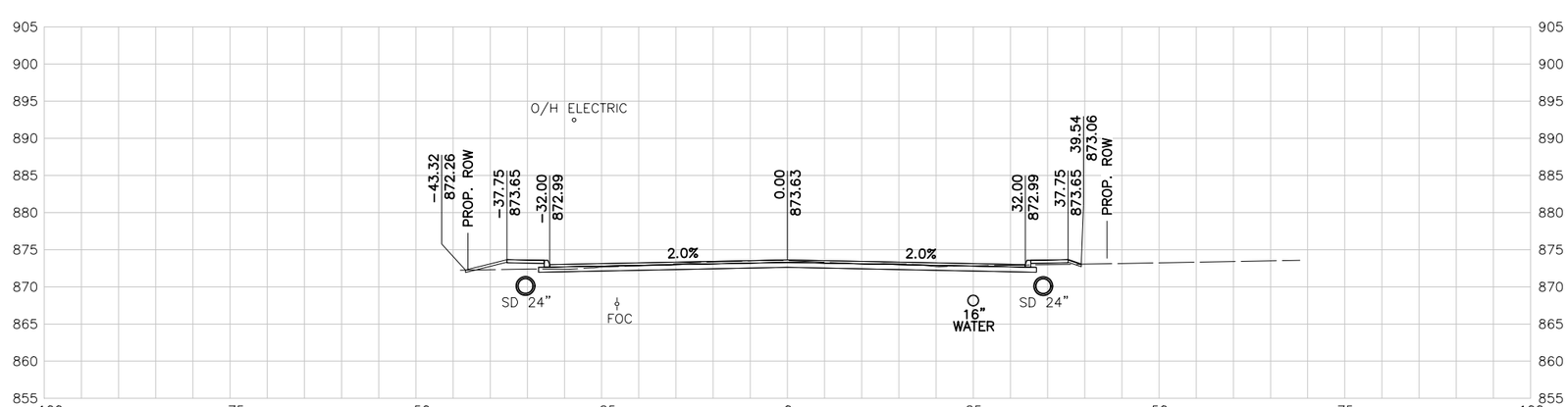

187+50.00 R1

10 5 0 10 20
SCALE FEET

NOTES:

1. UTILITY LOCATIONS ARE APPROXIMATE AND ARE SHOWN FROM THE BEST INFORMATION PROVIDED BY THE UTILITY COMPANIES AT THE TIME PLANS WERE PREPARED.
2. CONTRACTOR SHALL NOTIFY UTILITY COMPANIES AND LOCATE UTILITIES A MINIMUM OF 48 HOURS BEFORE BEGINNING WORK IN AREA.
3. CALL THE TEXAS STATE WIDE ONE CALL LOCATOR NUMBER 1-800-344-8377 48 HOURS BEFORE BEGINNING ANY EXCAVATION.

   DUE TO FEDERAL REGULATION TITLE 49, PART 192.181, CPS MUST MAINTAIN ACCESS TO GAS VALVES AT ALL TIMES. THE CONTRACTOR MUST PROTECT AND WORK AROUND ANY GAS VALVES THAT ARE IN THE PROJECT AREA.

   THE CONTRACTOR WILL BE RESPONSIBLE FOR PROTECTING ALL EXISTING UTILITIES ADJACENT TO THE WORK AREA.
4. SEE CROSS STREET PLAN AND PROFILE SHEETS AND INTERSECTION LAYOUT SHEETS FOR ADDITIONAL INFORMATION AT THE CROSS STREET.
5. SEE DRIVEWAY SUMMARY FOR ADDITIONAL INFORMATION PERTAINING TO DRIVEWAYS.

PRELIMINARY

90% SUBMITTAL
FOR INTERIM REVIEW ONLY
NOT FOR CONSTRUCTION, BIDDING, OR PERMIT PURPOSES.

CP&Y

ENGINEER JAIME AGUILAR
P.E. No. 87606 DATE 2/23/2017

BEXAR COUNTY
PUBLIC WORKS DEPARTMENT

NO	DATE	DESCRIPTION	DWG	CHK

REVISIONS

CP&Y
12500 SAN PEDRO AVENUE, SUITE 450
SAN ANTONIO, TEXAS 78216
TEL (210) 494-8004
FAX (210) 494-8286
T.B.P.E. FIRM # 1741

TALLEY ROAD

CROSS SECTIONS

SHEET 60 OF 88

PROJECT NUMBER:		SHEET NO.
		608
DESIGNED BY: CP&Y	ROADWAY/HIGHWAY:	
CHECKED BY: CP&Y	TALLEY ROAD	
DRAWN BY: CP&Y	STATE	COUNTY
CHECKED BY: CP&Y	TEXAS	BEXAR

cpybw_ANSIB.tbl
cpypdf_ANSIB.pltcfg
pw:/Active Projects/BEXA14048.01/8.00 Plans and Drawings/8.10 Base Files/14048RDxsec_90.dgn
2/23/2017 4:31:26 PM mberon
pw:/Active Projects/BEXA14048.01/8.00 Plans and Drawings/8.10 Base Files/14048RDxsec_90.dgn

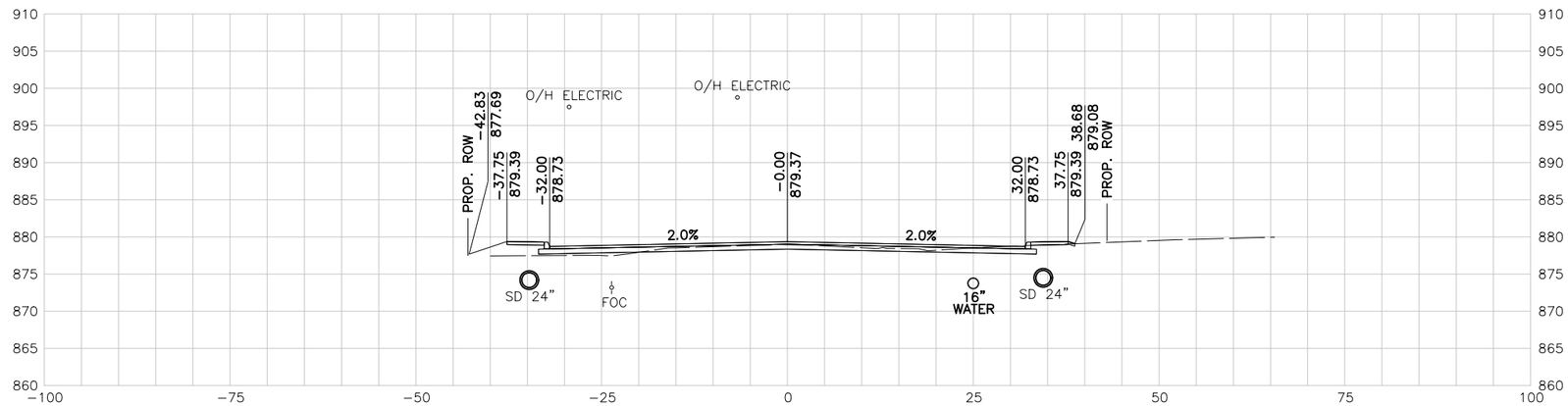

190+00.00 R1

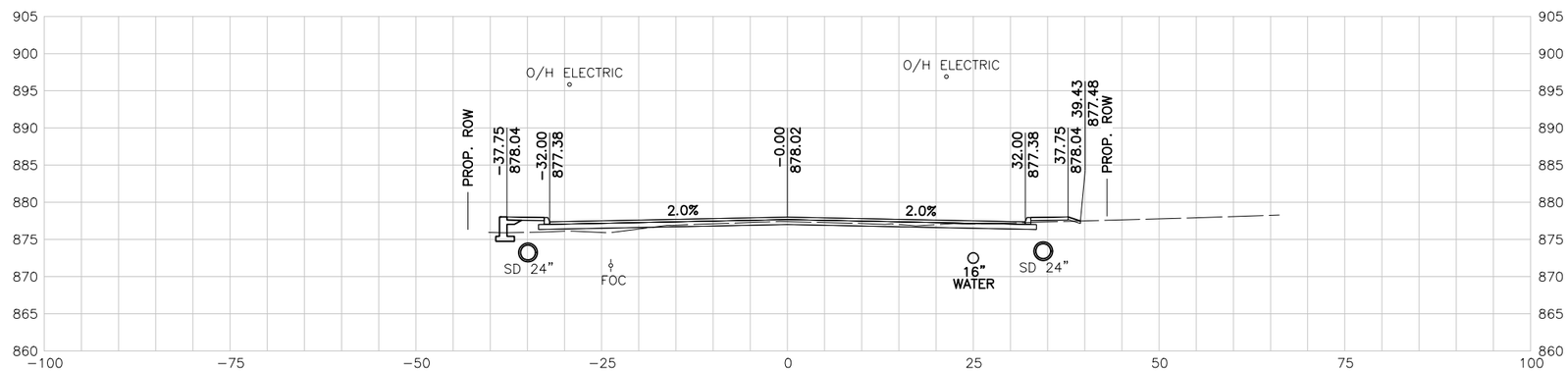

189+50.00 R1

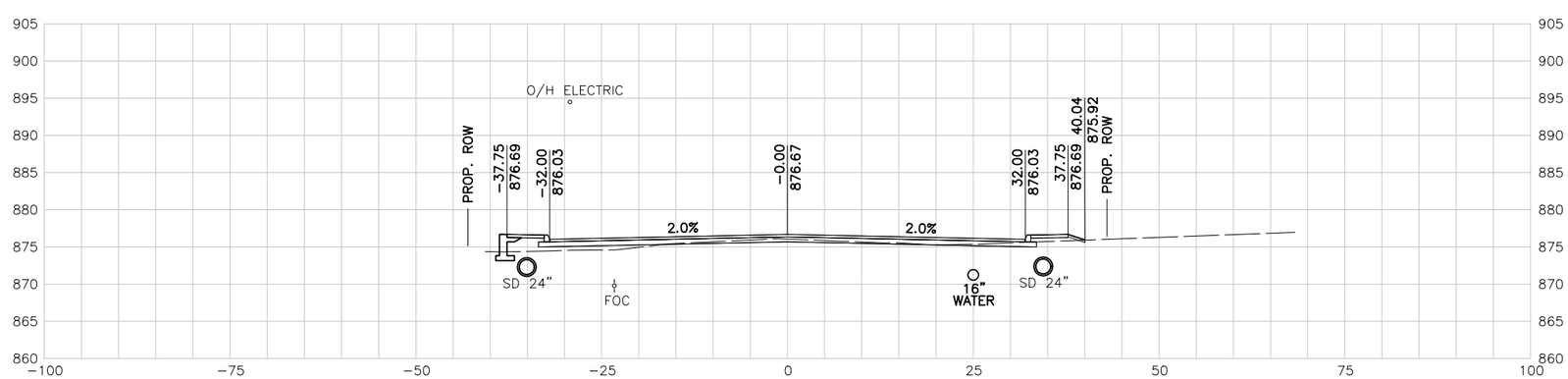

189+00.00 R1

10 5 0 10 20
SCALE FEET

NOTES:

1. UTILITY LOCATIONS ARE APPROXIMATE AND ARE SHOWN FROM THE BEST INFORMATION PROVIDED BY THE UTILITY COMPANIES AT THE TIME PLANS WERE PREPARED.
2. CONTRACTOR SHALL NOTIFY UTILITY COMPANIES AND LOCATE UTILITIES A MINIMUM OF 48 HOURS BEFORE BEGINNING WORK IN AREA.
3. CALL THE TEXAS STATE WIDE ONE CALL LOCATOR NUMBER 1-800-344-8377 48 HOURS BEFORE BEGINNING ANY EXCAVATION.

   DUE TO FEDERAL REGULATION TITLE 49, PART 192.181, CPS MUST MAINTAIN ACCESS TO GAS VALVES AT ALL TIMES. THE CONTRACTOR MUST PROTECT AND WORK AROUND ANY GAS VALVES THAT ARE IN THE PROJECT AREA.

   THE CONTRACTOR WILL BE RESPONSIBLE FOR PROTECTING ALL EXISTING UTILITIES ADJACENT TO THE WORK AREA.
4. SEE CROSS STREET PLAN AND PROFILE SHEETS AND INTERSECTION LAYOUT SHEETS FOR ADDITIONAL INFORMATION AT THE CROSS STREET.
5. SEE DRIVEWAY SUMMARY FOR ADDITIONAL INFORMATION PERTAINING TO DRIVEWAYS.

PRELIMINARY

90% SUBMITTAL
FOR INTERIM REVIEW ONLY
NOT FOR CONSTRUCTION, BIDDING, OR PERMIT PURPOSES.

CP&Y

ENGINEER JAIME AGUILAR
P.E. No. 87606 DATE 2/23/2017

BEXAR COUNTY
PUBLIC WORKS DEPARTMENT

NO	DATE	DESCRIPTION	DWG	CHK

REVISIONS

CP&Y
12500 SAN PEDRO AVENUE, SUITE 450
SAN ANTONIO, TEXAS 78216
TEL (210) 494-8004
FAX (210) 494-8286
T.B.P.E. FIRM # 1741

TALLEY ROAD

CROSS SECTIONS

SHEET 61 OF 88

PROJECT NUMBER:		SHEET NO.	
		609	
DESIGNED BY:	CP&Y	ROADWAY/HIGHWAY:	
CHECKED BY:	CP&Y	TALLEY ROAD	
DRAWN BY:	CP&Y	STATE	COUNTY
CHECKED BY:	CP&Y	TEXAS	BEXAR

cpybw_ANSIB.tbl
cpypdf_ANSIB.pltcfg
pw:/Active Projects/BEXA14048.01/8.00 Plans and Drawings/8.10 Base Files/14048RDxsec_90.dgn
2/23/2017 4:31:26 PM mberon
pw:/Active Projects/BEXA14048.01/8.00 Plans and Drawings/8.10 Base Files/14048RDxsec_90.dgn

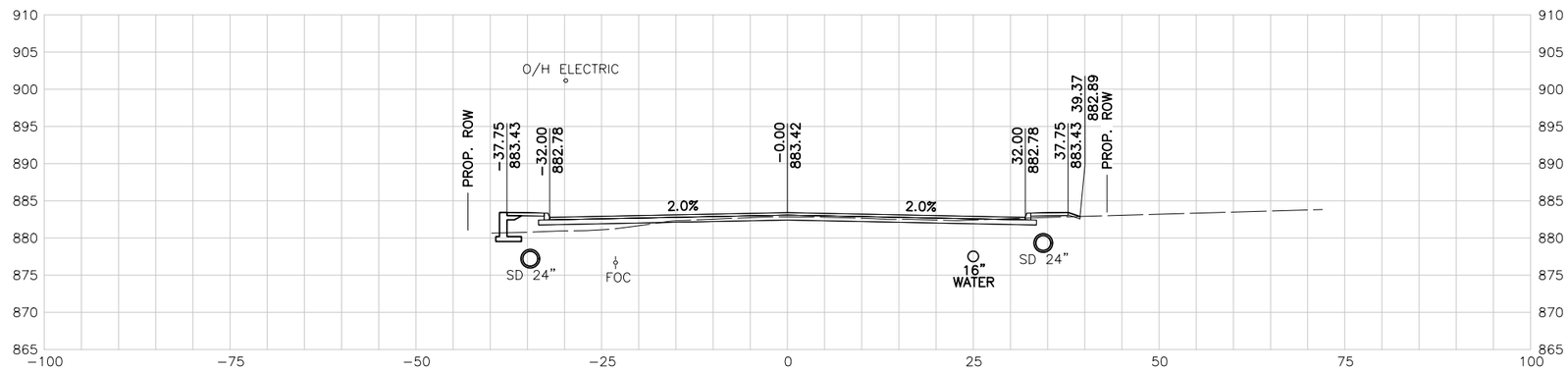

191+50.00 R1

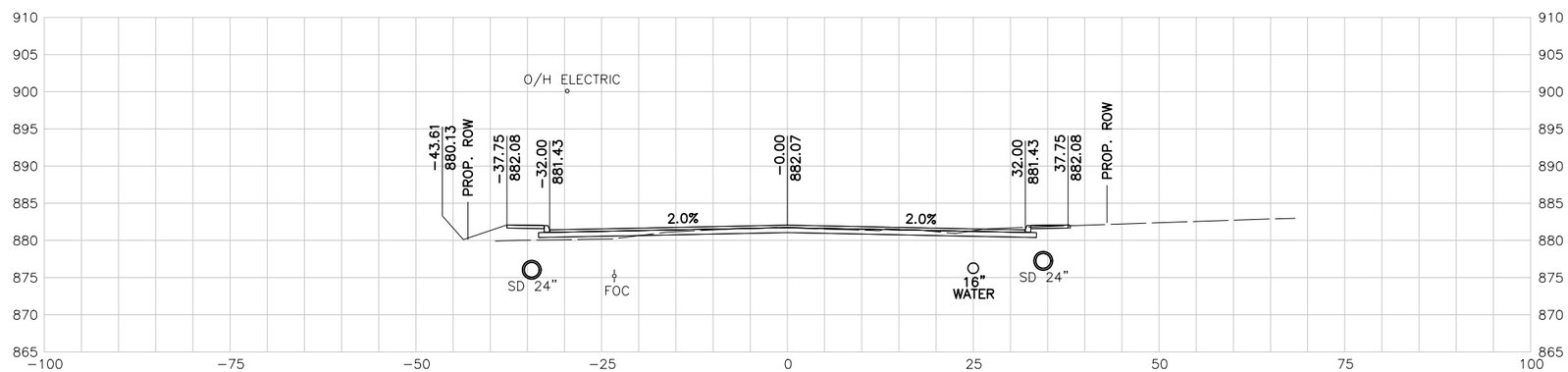

191+00.00 R1

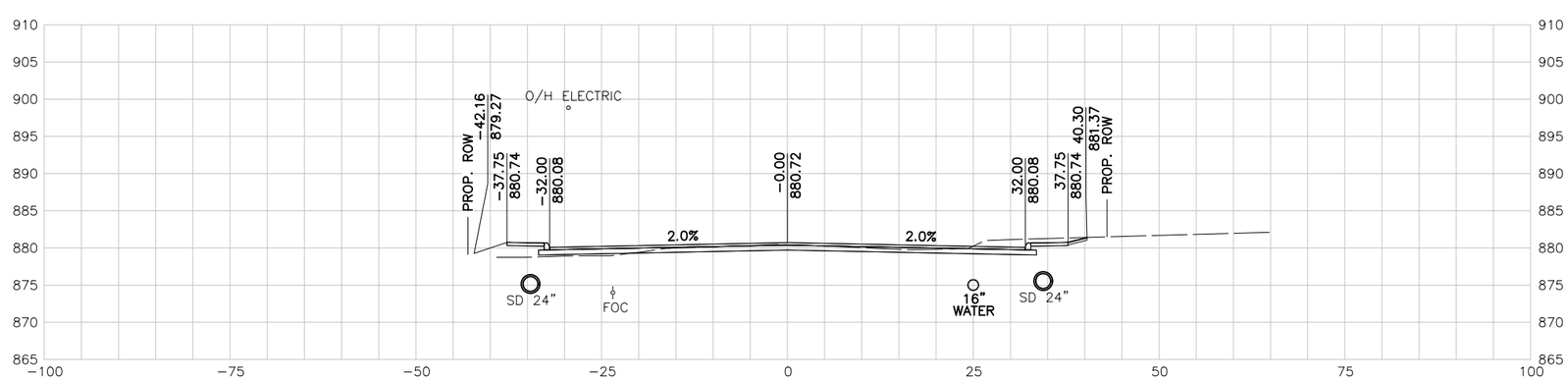

190+50.00 R1

10 5 0 10 20
SCALE FEET

NOTES:

1. UTILITY LOCATIONS ARE APPROXIMATE AND ARE SHOWN FROM THE BEST INFORMATION PROVIDED BY THE UTILITY COMPANIES AT THE TIME PLANS WERE PREPARED.
2. CONTRACTOR SHALL NOTIFY UTILITY COMPANIES AND LOCATE UTILITIES A MINIMUM OF 48 HOURS BEFORE BEGINNING WORK IN AREA.
3. CALL THE TEXAS STATE WIDE ONE CALL LOCATOR NUMBER 1-800-344-8377 48 HOURS BEFORE BEGINNING ANY EXCAVATION.

   DUE TO FEDERAL REGULATION TITLE 49, PART 192.181, CPS MUST MAINTAIN ACCESS TO GAS VALVES AT ALL TIMES. THE CONTRACTOR MUST PROTECT AND WORK AROUND ANY GAS VALVES THAT ARE IN THE PROJECT AREA.

   THE CONTRACTOR WILL BE RESPONSIBLE FOR PROTECTING ALL EXISTING UTILITIES ADJACENT TO THE WORK AREA.
4. SEE CROSS STREET PLAN AND PROFILE SHEETS AND INTERSECTION LAYOUT SHEETS FOR ADDITIONAL INFORMATION AT THE CROSS STREET.
5. SEE DRIVEWAY SUMMARY FOR ADDITIONAL INFORMATION PERTAINING TO DRIVEWAYS.

PRELIMINARY

90% SUBMITTAL
FOR INTERIM REVIEW ONLY
NOT FOR CONSTRUCTION, BIDDING, OR PERMIT PURPOSES.

CP&Y

ENGINEER JAIME AGUILAR
P.E. No. 87606 DATE 2/23/2017

BEXAR COUNTY
PUBLIC WORKS DEPARTMENT

NO	DATE	DESCRIPTION	DWG	CHK

REVISIONS

CP&Y
12500 SAN PEDRO AVENUE, SUITE 450
SAN ANTONIO, TEXAS 78216
TEL (210) 494-8004
FAX (210) 494-8286
T.B.P.E. FIRM # 1741

TALLEY ROAD

CROSS SECTIONS

SHEET 62 OF 88

PROJECT NUMBER:		SHEET NO.	
		610	
DESIGNED BY:	CP&Y	ROADWAY/HIGHWAY:	
CHECKED BY:	CP&Y	TALLEY ROAD	
DRAWN BY:	CP&Y	STATE	COUNTY
CHECKED BY:	CP&Y	TEXAS	BEXAR

cpybw_ANSIB.tbl
cpypdf_ANSIB.pltcfg
pw:/Active Projects/BEXA14048.01/8.00 Plans and Drawings/8.10 Base Files/14048RDxsec_90.dgn
2/23/2017 4:31:27 PM mberan
pw:/Active Projects/BEXA14048.01/8.00 Plans and Drawings/8.10 Base Files/14048RDxsec_90.dgn

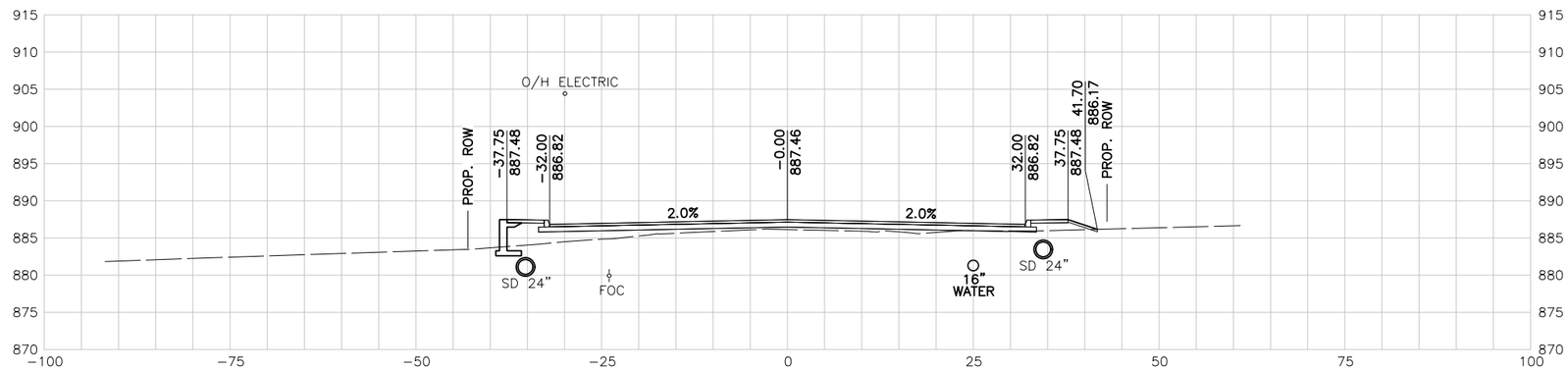

193+00.00 R1

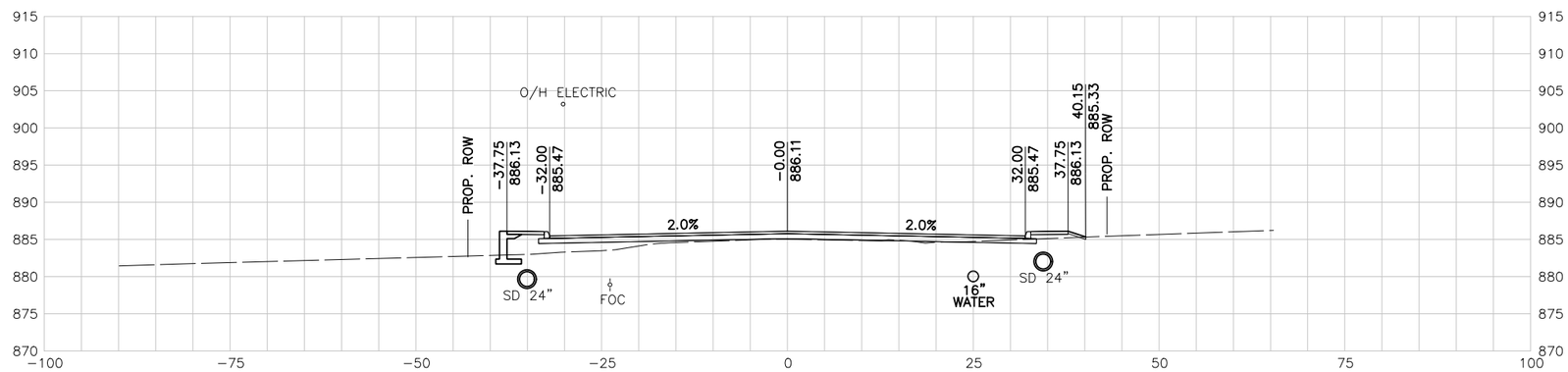

192+50.00 R1

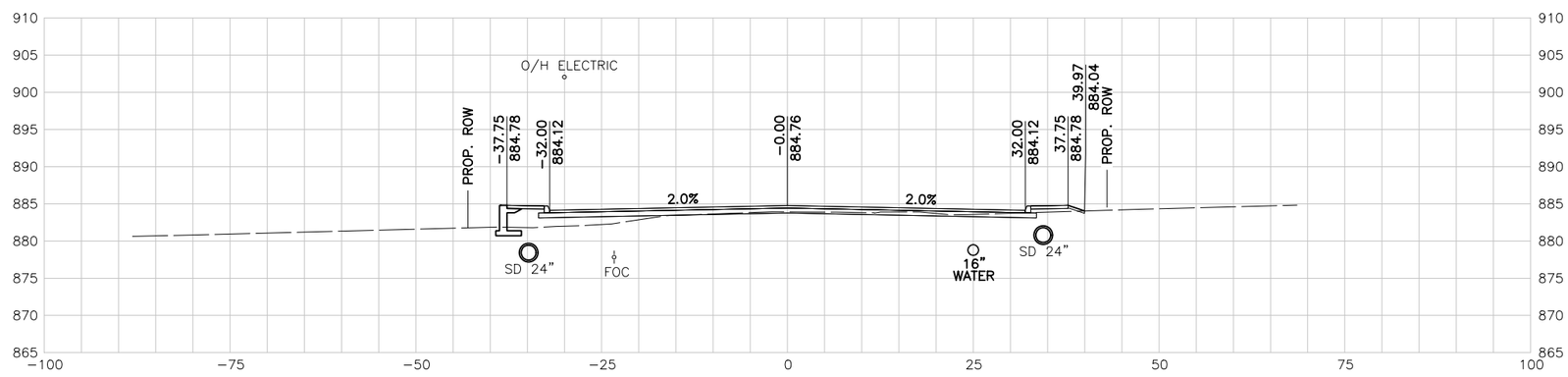

192+00.00 R1

10 5 0 10 20
SCALE FEET

NOTES:

1. UTILITY LOCATIONS ARE APPROXIMATE AND ARE SHOWN FROM THE BEST INFORMATION PROVIDED BY THE UTILITY COMPANIES AT THE TIME PLANS WERE PREPARED.
2. CONTRACTOR SHALL NOTIFY UTILITY COMPANIES AND LOCATE UTILITIES A MINIMUM OF 48 HOURS BEFORE BEGINNING WORK IN AREA.
3. CALL THE TEXAS STATE WIDE ONE CALL LOCATOR NUMBER 1-800-344-8377 48 HOURS BEFORE BEGINNING ANY EXCAVATION.

   DUE TO FEDERAL REGULATION TITLE 49, PART 192.181, CPS MUST MAINTAIN ACCESS TO GAS VALVES AT ALL TIMES. THE CONTRACTOR MUST PROTECT AND WORK AROUND ANY GAS VALVES THAT ARE IN THE PROJECT AREA.

   THE CONTRACTOR WILL BE RESPONSIBLE FOR PROTECTING ALL EXISTING UTILITIES ADJACENT TO THE WORK AREA.
4. SEE CROSS STREET PLAN AND PROFILE SHEETS AND INTERSECTION LAYOUT SHEETS FOR ADDITIONAL INFORMATION AT THE CROSS STREET.
5. SEE DRIVEWAY SUMMARY FOR ADDITIONAL INFORMATION PERTAINING TO DRIVEWAYS.

PRELIMINARY

90% SUBMITTAL
FOR INTERIM REVIEW ONLY
NOT FOR CONSTRUCTION, BIDDING, OR PERMIT PURPOSES.

CP&Y

ENGINEER JAIME AGUILAR
P.E. No. 87606 DATE 2/23/2017

BEXAR COUNTY
PUBLIC WORKS DEPARTMENT

NO	DATE	DESCRIPTION	DWG	CHK

REVISIONS

CP&Y
12500 SAN PEDRO AVENUE, SUITE 450
SAN ANTONIO, TEXAS 78216
TEL (210) 494-8004
FAX (210) 494-8286
T.B.P.E. FIRM # 1741

TALLEY ROAD

CROSS SECTIONS

SHEET 63 OF 88

PROJECT NUMBER:		SHEET NO.	
		611	
DESIGNED BY:	CP&Y	ROADWAY/HIGHWAY:	
CHECKED BY:	CP&Y	TALLEY ROAD	
DRAWN BY:	CP&Y	STATE	COUNTY
CHECKED BY:	CP&Y	TEXAS	BEXAR

cpybw_ANSIB.tbl
cpypdf_ANSIB.pltcfg
pw:/Active Projects/BEXA14048.01/8.00 Plans and Drawings/8.10 Base Files/14048RDxsec_90.dgn
2/23/2017 4:31:27 PM mberon
pw:/Active Projects/BEXA14048.01/8.00 Plans and Drawings/8.10 Base Files/14048RDxsec_90.dgn

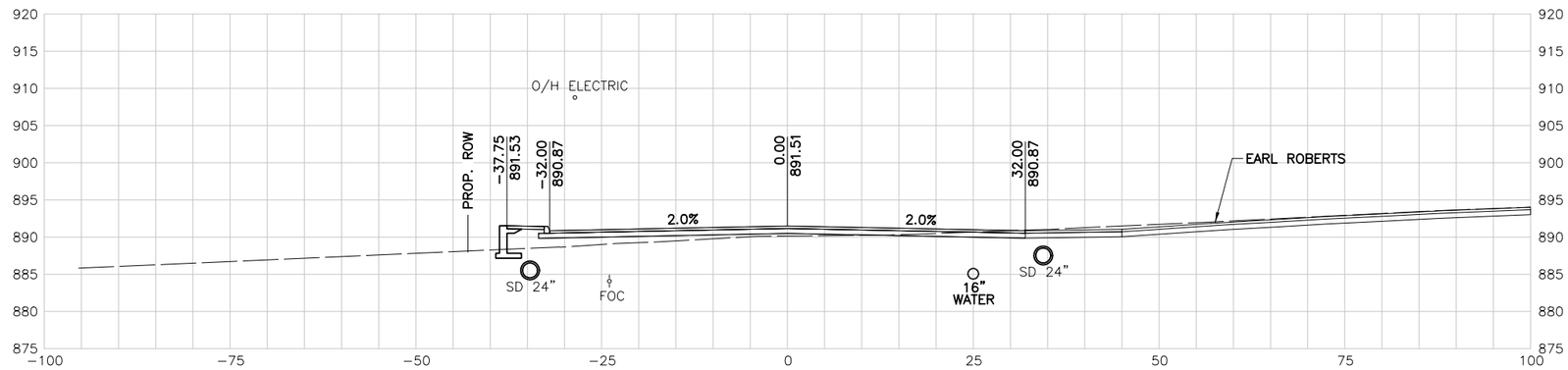

194+50.00 R1

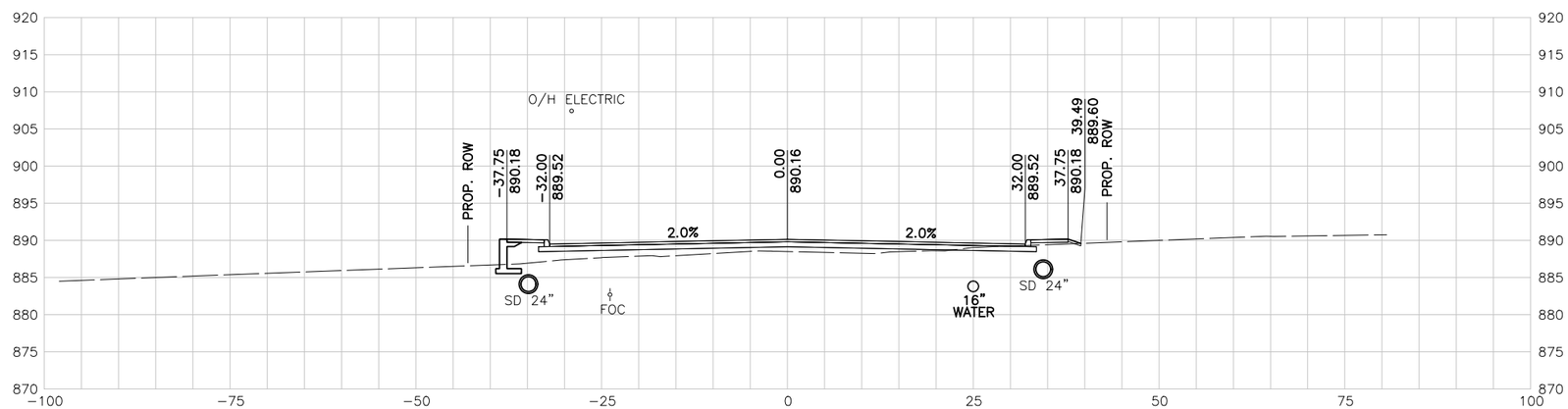

194+00.00 R1

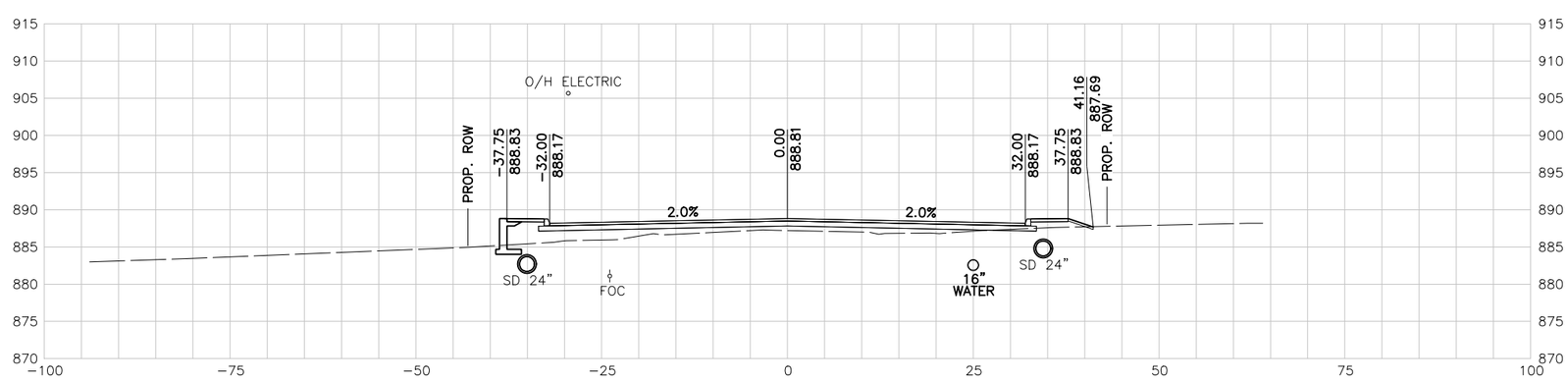

193+50.00 R1

10 5 0 10 20
SCALE FEET

NOTES:

1. UTILITY LOCATIONS ARE APPROXIMATE AND ARE SHOWN FROM THE BEST INFORMATION PROVIDED BY THE UTILITY COMPANIES AT THE TIME PLANS WERE PREPARED.
2. CONTRACTOR SHALL NOTIFY UTILITY COMPANIES AND LOCATE UTILITIES A MINIMUM OF 48 HOURS BEFORE BEGINNING WORK IN AREA.
3. CALL THE TEXAS STATE WIDE ONE CALL LOCATOR NUMBER 1-800-344-8377 48 HOURS BEFORE BEGINNING ANY EXCAVATION.

   DUE TO FEDERAL REGULATION TITLE 49, PART 192.181, CPS MUST MAINTAIN ACCESS TO GAS VALVES AT ALL TIMES. THE CONTRACTOR MUST PROTECT AND WORK AROUND ANY GAS VALVES THAT ARE IN THE PROJECT AREA.

   THE CONTRACTOR WILL BE RESPONSIBLE FOR PROTECTING ALL EXISTING UTILITIES ADJACENT TO THE WORK AREA.
4. SEE CROSS STREET PLAN AND PROFILE SHEETS AND INTERSECTION LAYOUT SHEETS FOR ADDITIONAL INFORMATION AT THE CROSS STREET.
5. SEE DRIVEWAY SUMMARY FOR ADDITIONAL INFORMATION PERTAINING TO DRIVEWAYS.

PRELIMINARY

90% SUBMITTAL
FOR INTERIM REVIEW ONLY
NOT FOR CONSTRUCTION, BIDDING, OR PERMIT PURPOSES.

CP&Y

ENGINEER JAIME AGUILAR
P.E. No. 87606 DATE 2/23/2017

BEXAR COUNTY
PUBLIC WORKS DEPARTMENT

NO	DATE	DESCRIPTION	DWG	CHK

REVISIONS

CP&Y
12500 SAN PEDRO AVENUE, SUITE 450
SAN ANTONIO, TEXAS 78216
TEL (210) 494-8004
FAX (210) 494-8286
T.B.P.E. FIRM # 1741

TALLEY ROAD

CROSS SECTIONS

SHEET 64 OF 88

PROJECT NUMBER:		SHEET NO.	
		612	
DESIGNED BY:	CP&Y	ROADWAY/HIGHWAY:	
CHECKED BY:	CP&Y	TALLEY ROAD	
DRAWN BY:	CP&Y	STATE	COUNTY
CHECKED BY:	CP&Y	TEXAS	BEXAR

cpybw_ANSIB.tbl
cpypdf_ANSIB.pltcfg
pw:/Active Projects/BEXA14048.01/8.00 Plans and Drawings/8.10 Base Files/14048RDxsec_90.dgn
2/23/2017 4:31:28 PM mberon
pw:/Active Projects/BEXA14048.01/8.00 Plans and Drawings/8.10 Base Files/14048RDxsec_90.dgn

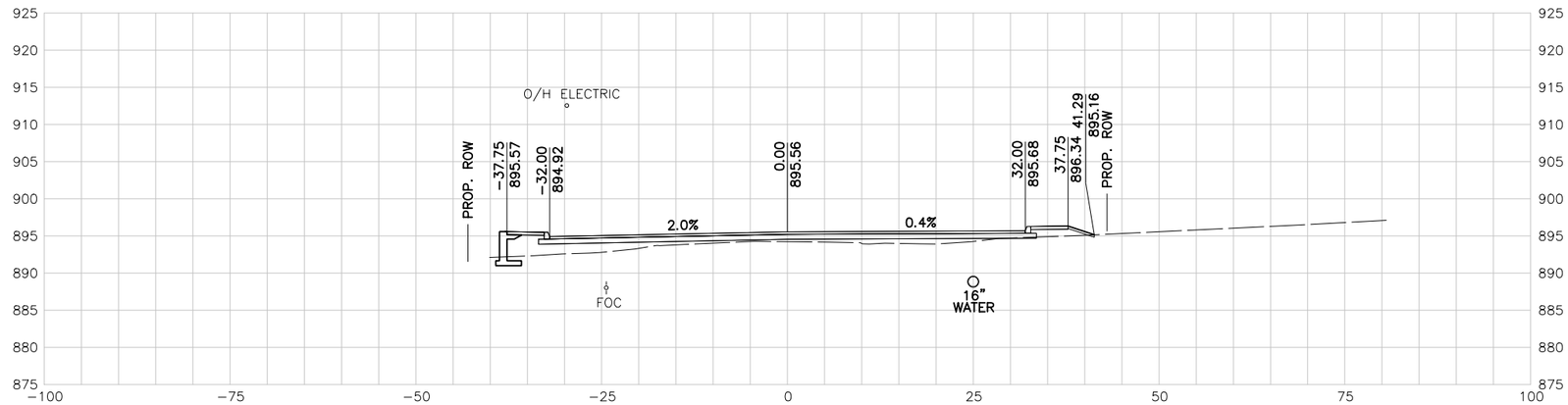

196+00.00 R1

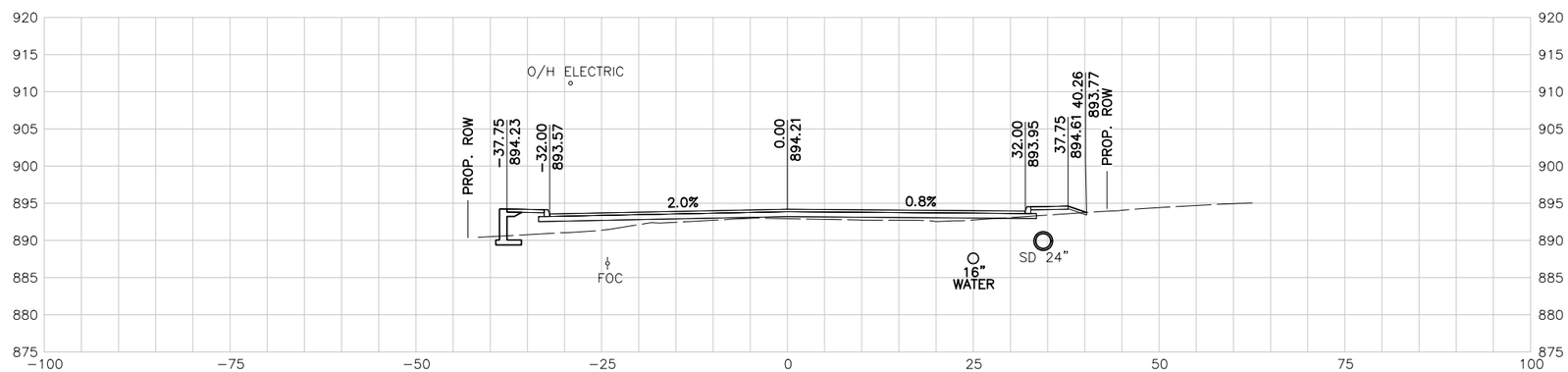

195+50.00 R1

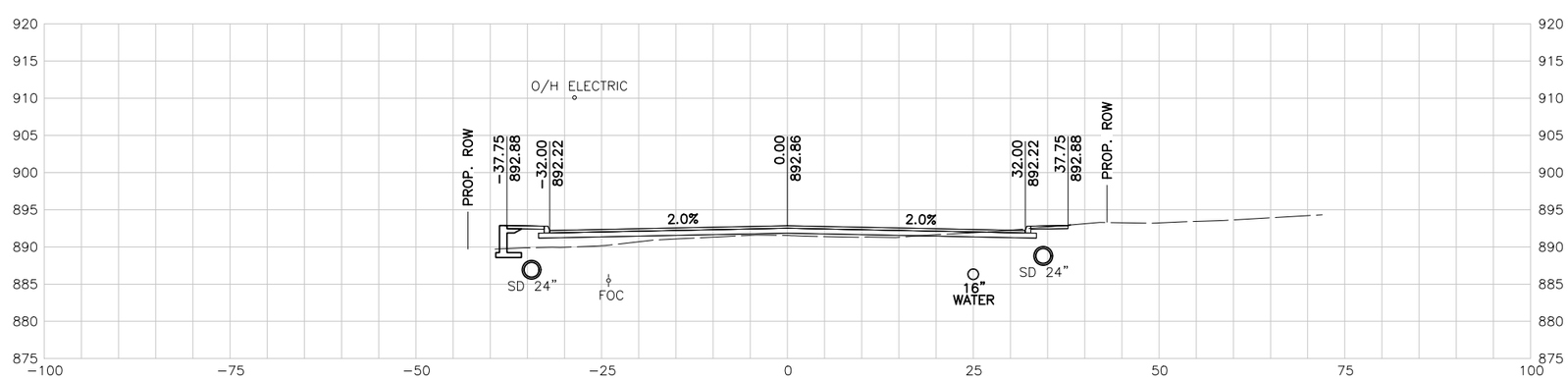

195+00.00 R1

10 5 0 10 20
SCALE FEET

NOTES:

1. UTILITY LOCATIONS ARE APPROXIMATE AND ARE SHOWN FROM THE BEST INFORMATION PROVIDED BY THE UTILITY COMPANIES AT THE TIME PLANS WERE PREPARED.
2. CONTRACTOR SHALL NOTIFY UTILITY COMPANIES AND LOCATE UTILITIES A MINIMUM OF 48 HOURS BEFORE BEGINNING WORK IN AREA.
3. CALL THE TEXAS STATE WIDE ONE CALL LOCATOR NUMBER 1-800-344-8377 48 HOURS BEFORE BEGINNING ANY EXCAVATION.

   DUE TO FEDERAL REGULATION TITLE 49, PART 192.181, CPS MUST MAINTAIN ACCESS TO GAS VALVES AT ALL TIMES. THE CONTRACTOR MUST PROTECT AND WORK AROUND ANY GAS VALVES THAT ARE IN THE PROJECT AREA.

   THE CONTRACTOR WILL BE RESPONSIBLE FOR PROTECTING ALL EXISTING UTILITIES ADJACENT TO THE WORK AREA.
4. SEE CROSS STREET PLAN AND PROFILE SHEETS AND INTERSECTION LAYOUT SHEETS FOR ADDITIONAL INFORMATION AT THE CROSS STREET.
5. SEE DRIVEWAY SUMMARY FOR ADDITIONAL INFORMATION PERTAINING TO DRIVEWAYS.

PRELIMINARY

90% SUBMITTAL
FOR INTERIM REVIEW ONLY
NOT FOR CONSTRUCTION, BIDDING, OR PERMIT PURPOSES.

CP&Y

ENGINEER JAIME AGUILAR
P.E. No. 87606 DATE 2/23/2017

BEXAR COUNTY
PUBLIC WORKS DEPARTMENT

NO	DATE	DESCRIPTION	DWG	CHK

REVISIONS

CP&Y
12500 SAN PEDRO AVENUE, SUITE 450
SAN ANTONIO, TEXAS 78216
TEL (210) 494-8004
FAX (210) 494-8286
T.B.P.E. FIRM # 1741

TALLEY ROAD

CROSS SECTIONS

SHEET 65 OF 88

PROJECT NUMBER:		SHEET NO.	
		613	
DESIGNED BY:	CP&Y	ROADWAY/HIGHWAY:	
CHECKED BY:	CP&Y	TALLEY ROAD	
DRAWN BY:	CP&Y	STATE	COUNTY
CHECKED BY:	CP&Y	TEXAS	BEXAR

cpybw_ANSIB.tbl
cpypdf_ANSIB.pltcfg
pw:/Active Projects/BEXA14048.01/8.00 Plans and Drawings/8.10 Base Files/14048RDxsec_90.dgn
2/23/2017 4:31:28 PM mberon
pw:/Active Projects/BEXA14048.01/8.00 Plans and Drawings/8.10 Base Files/14048RDxsec_90.dgn

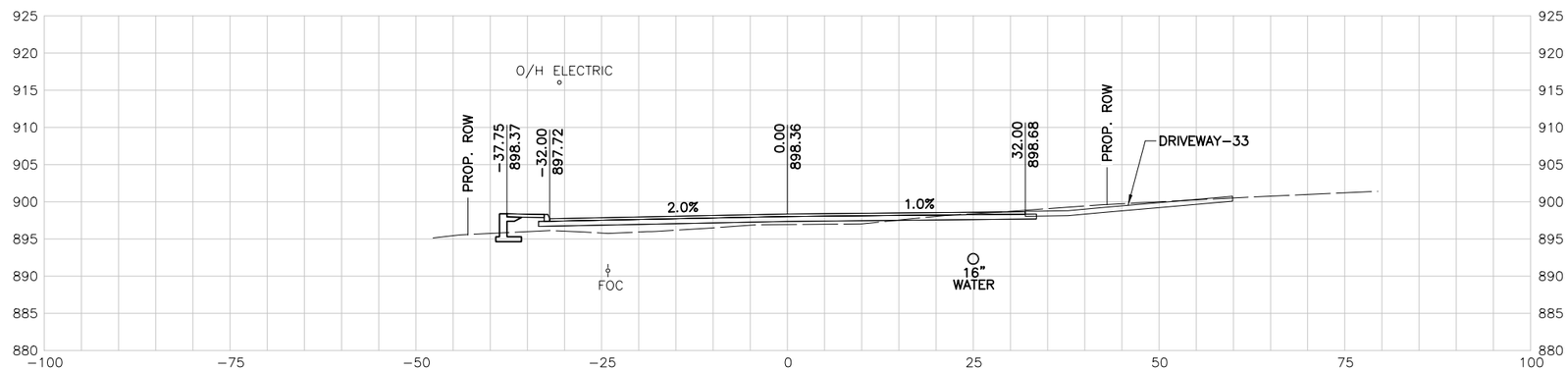

197+50.00 R1

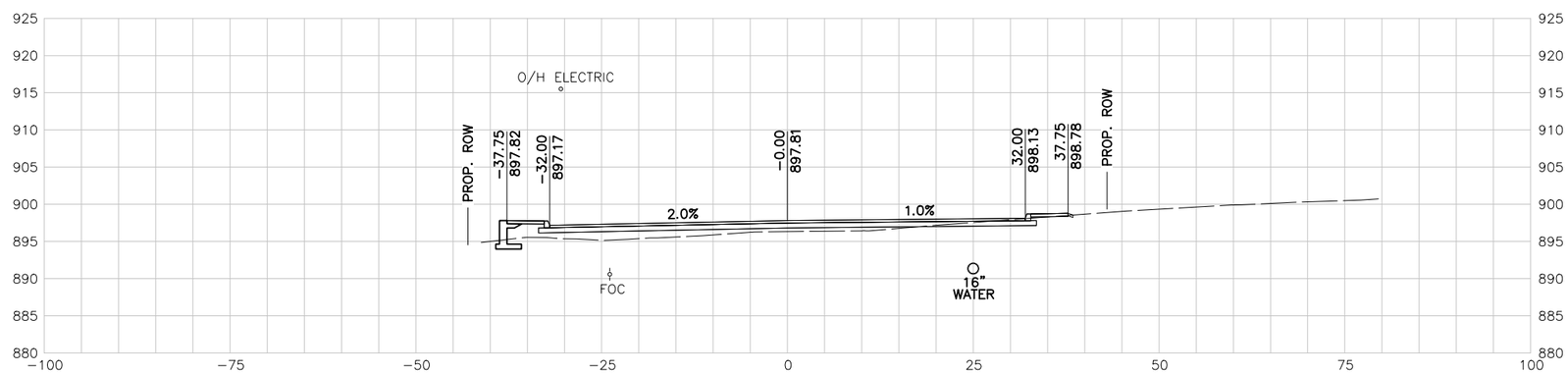

197+00.00 R1

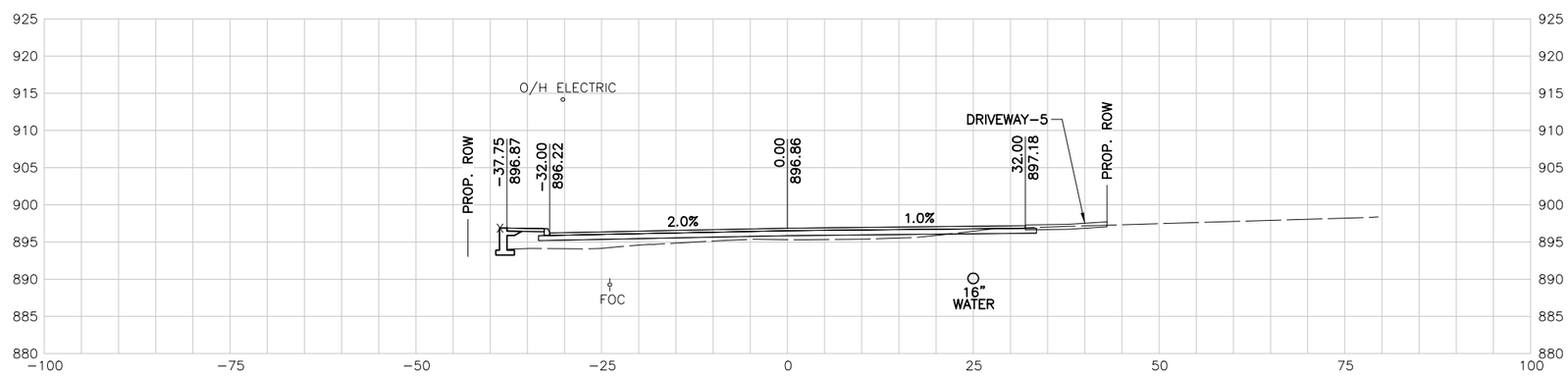

196+50.00 R1

10 5 0 10 20
SCALE FEET

NOTES:

1. UTILITY LOCATIONS ARE APPROXIMATE AND ARE SHOWN FROM THE BEST INFORMATION PROVIDED BY THE UTILITY COMPANIES AT THE TIME PLANS WERE PREPARED.
2. CONTRACTOR SHALL NOTIFY UTILITY COMPANIES AND LOCATE UTILITIES A MINIMUM OF 48 HOURS BEFORE BEGINNING WORK IN AREA.
3. CALL THE TEXAS STATE WIDE ONE CALL LOCATOR NUMBER 1-800-344-8377 48 HOURS BEFORE BEGINNING ANY EXCAVATION.

   DUE TO FEDERAL REGULATION TITLE 49, PART 192.181, CPS MUST MAINTAIN ACCESS TO GAS VALVES AT ALL TIMES. THE CONTRACTOR MUST PROTECT AND WORK AROUND ANY GAS VALVES THAT ARE IN THE PROJECT AREA.

   THE CONTRACTOR WILL BE RESPONSIBLE FOR PROTECTING ALL EXISTING UTILITIES ADJACENT TO THE WORK AREA.
4. SEE CROSS STREET PLAN AND PROFILE SHEETS AND INTERSECTION LAYOUT SHEETS FOR ADDITIONAL INFORMATION AT THE CROSS STREET.
5. SEE DRIVEWAY SUMMARY FOR ADDITIONAL INFORMATION PERTAINING TO DRIVEWAYS.

PRELIMINARY

90% SUBMITTAL
FOR INTERIM REVIEW ONLY
NOT FOR CONSTRUCTION, BIDDING, OR PERMIT PURPOSES.

CP&Y

ENGINEER JAIME AGUILAR
P.E. No. 87606 DATE 2/23/2017

BEXAR COUNTY
PUBLIC WORKS DEPARTMENT

NO	DATE	DESCRIPTION	DWG	CHK

REVISIONS

CP&Y
12500 SAN PEDRO AVENUE, SUITE 450
SAN ANTONIO, TEXAS 78216
TEL (210) 494-8004
FAX (210) 494-8286
T.B.P.E. FIRM # 1741

TALLEY ROAD

CROSS SECTIONS

SHEET 66 OF 88

PROJECT NUMBER:		SHEET NO.	
		614	
DESIGNED BY:	CP&Y	ROADWAY/HIGHWAY:	
CHECKED BY:	CP&Y	TALLEY ROAD	
DRAWN BY:	CP&Y	STATE	COUNTY
CHECKED BY:	CP&Y	TEXAS	BEXAR

cpybw_ANSIB.tbl
cpypdf_ANSIB.pltcfg
pw:/Active Projects/BEXA14048.01/8.00 Plans and Drawings/8.10 Base Files/14048RDxsec_90.dgn
2/23/2017 4:31:29 PM mberan
pw:/Active Projects/BEXA14048.01/8.00 Plans and Drawings/8.10 Base Files/14048RDxsec_90.dgn

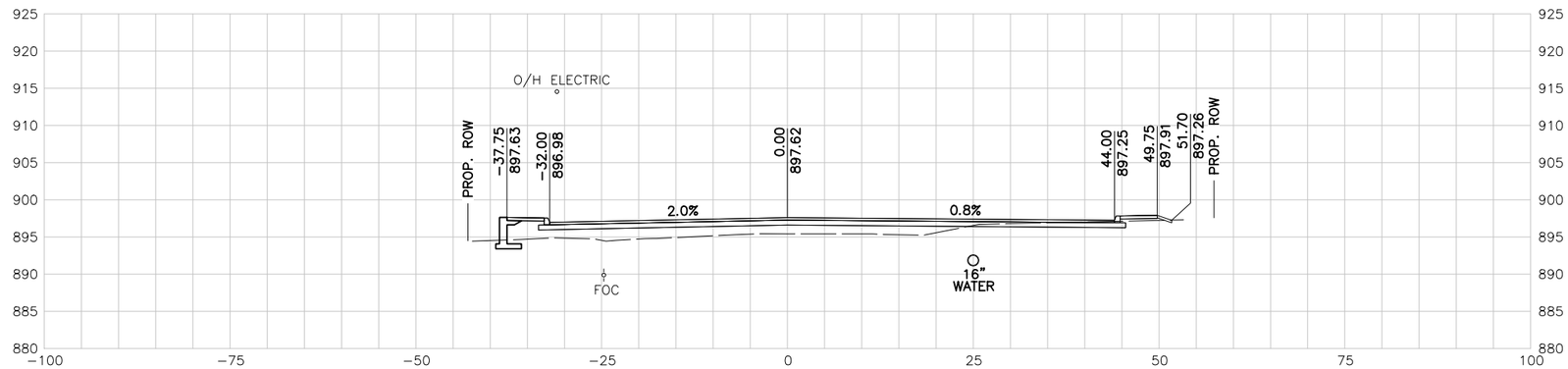

199+00.00 R1

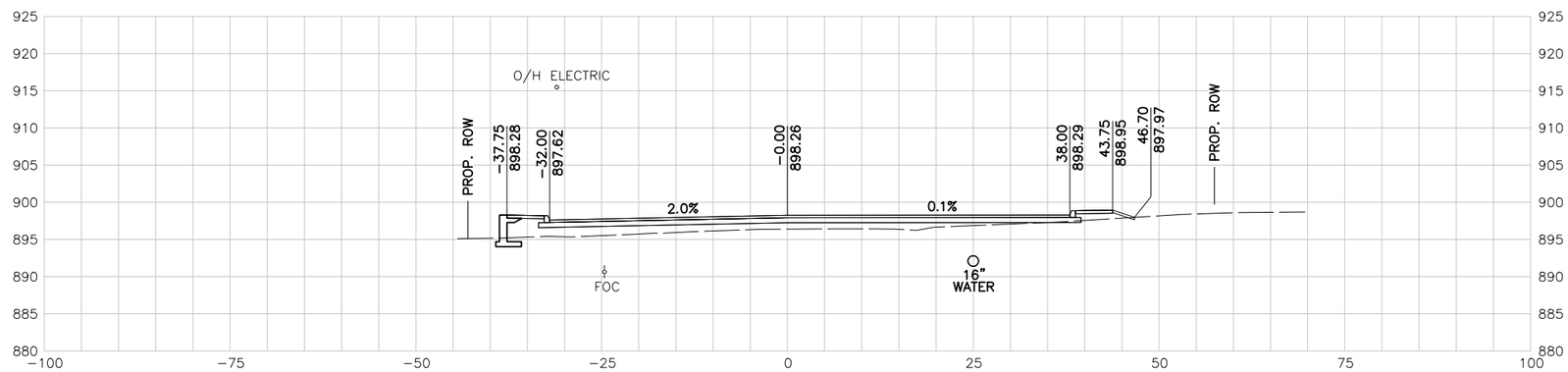

198+50.00 R1

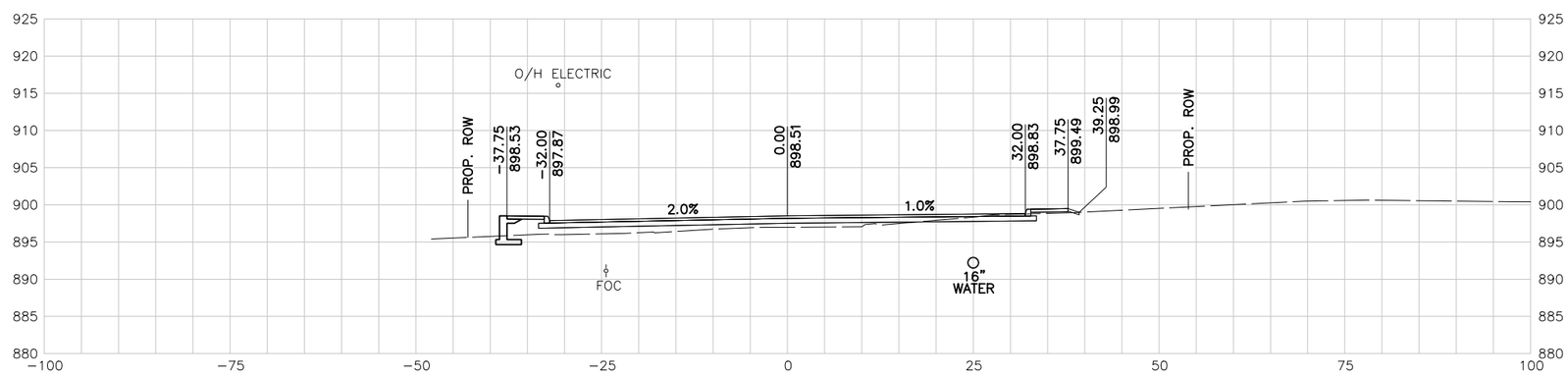

198+00.00 R1

10 5 0 10 20
SCALE FEET

NOTES:

1. UTILITY LOCATIONS ARE APPROXIMATE AND ARE SHOWN FROM THE BEST INFORMATION PROVIDED BY THE UTILITY COMPANIES AT THE TIME PLANS WERE PREPARED.
2. CONTRACTOR SHALL NOTIFY UTILITY COMPANIES AND LOCATE UTILITIES A MINIMUM OF 48 HOURS BEFORE BEGINNING WORK IN AREA.
3. CALL THE TEXAS STATE WIDE ONE CALL LOCATOR NUMBER 1-800-344-8377 48 HOURS BEFORE BEGINNING ANY EXCAVATION.

   DUE TO FEDERAL REGULATION TITLE 49, PART 192.181, CPS MUST MAINTAIN ACCESS TO GAS VALVES AT ALL TIMES. THE CONTRACTOR MUST PROTECT AND WORK AROUND ANY GAS VALVES THAT ARE IN THE PROJECT AREA.

   THE CONTRACTOR WILL BE RESPONSIBLE FOR PROTECTING ALL EXISTING UTILITIES ADJACENT TO THE WORK AREA.
4. SEE CROSS STREET PLAN AND PROFILE SHEETS AND INTERSECTION LAYOUT SHEETS FOR ADDITIONAL INFORMATION AT THE CROSS STREET.
5. SEE DRIVEWAY SUMMARY FOR ADDITIONAL INFORMATION PERTAINING TO DRIVEWAYS.

PRELIMINARY

90% SUBMITTAL
FOR INTERIM REVIEW ONLY
NOT FOR CONSTRUCTION, BIDDING, OR PERMIT PURPOSES.

CP&Y

ENGINEER JAIME AGUILAR
P.E. No. 87606 DATE 2/23/2017

BEXAR COUNTY
PUBLIC WORKS DEPARTMENT

NO	DATE	DESCRIPTION	DWG	CHK

REVISIONS

CP&Y
12500 SAN PEDRO AVENUE, SUITE 450
SAN ANTONIO, TEXAS 78216
TEL (210) 494-8004
FAX (210) 494-8286
T.B.P.E. FIRM # 1741

TALLEY ROAD

CROSS SECTIONS

SHEET 67 OF 88

PROJECT NUMBER:		SHEET NO.	
		615	
DESIGNED BY:	CP&Y	ROADWAY/HIGHWAY:	
CHECKED BY:	CP&Y	TALLEY ROAD	
DRAWN BY:	CP&Y	STATE	COUNTY
CHECKED BY:	CP&Y	TEXAS	BEXAR

cpybw_ANSIB.tbl
cpypdf_ANSIB.pltcfg
pw:/Active Projects/BEXA14048.01/8.00 Plans and Drawings/8.10 Base Files/14048RDxsec_90.dgn
2/23/2017 4:31:29 PM mberan
pw:/Active Projects/BEXA14048.01/8.00 Plans and Drawings/8.10 Base Files/14048RDxsec_90.dgn

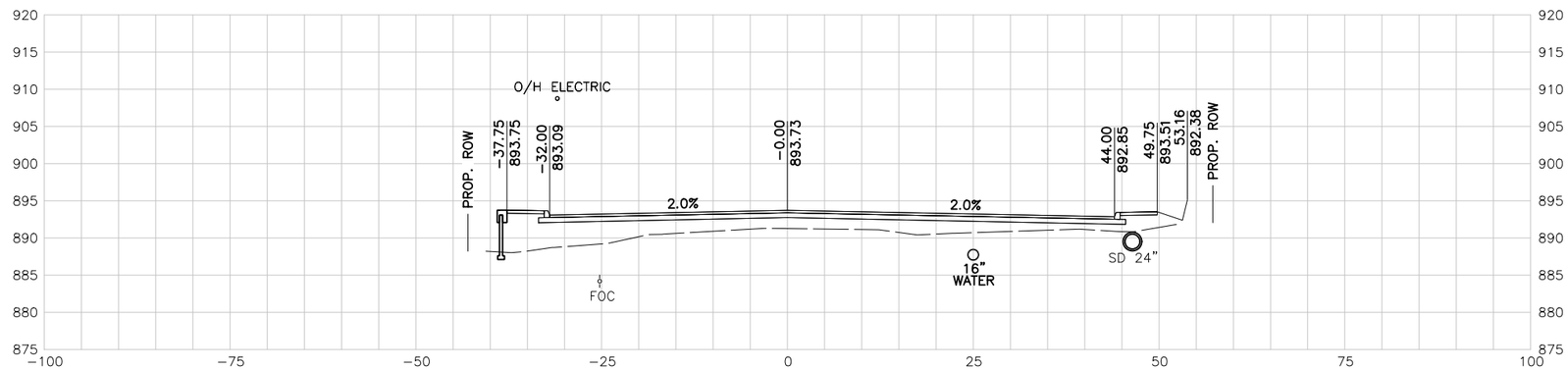

200+50.00 R1

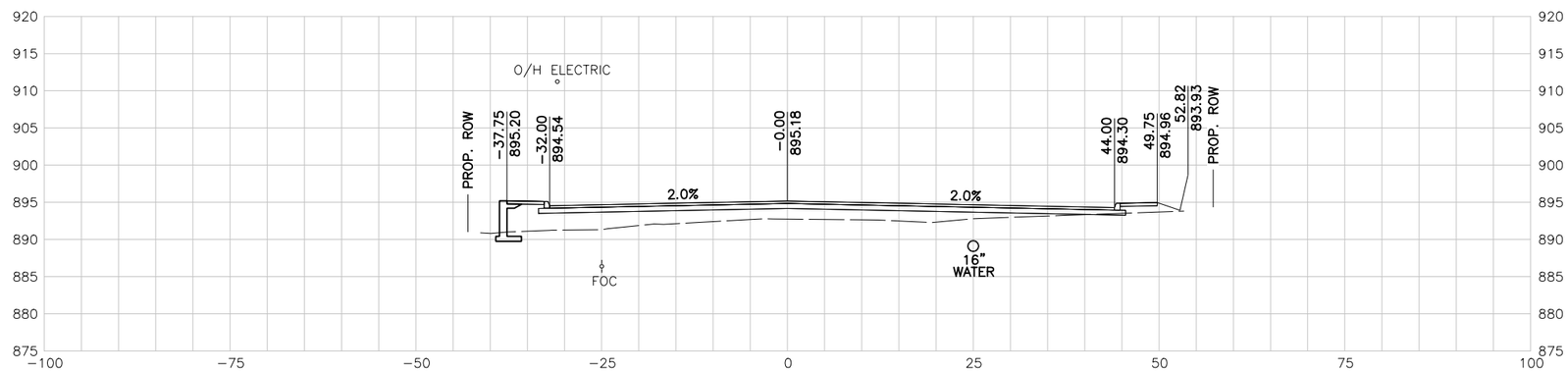

200+00.00 R1

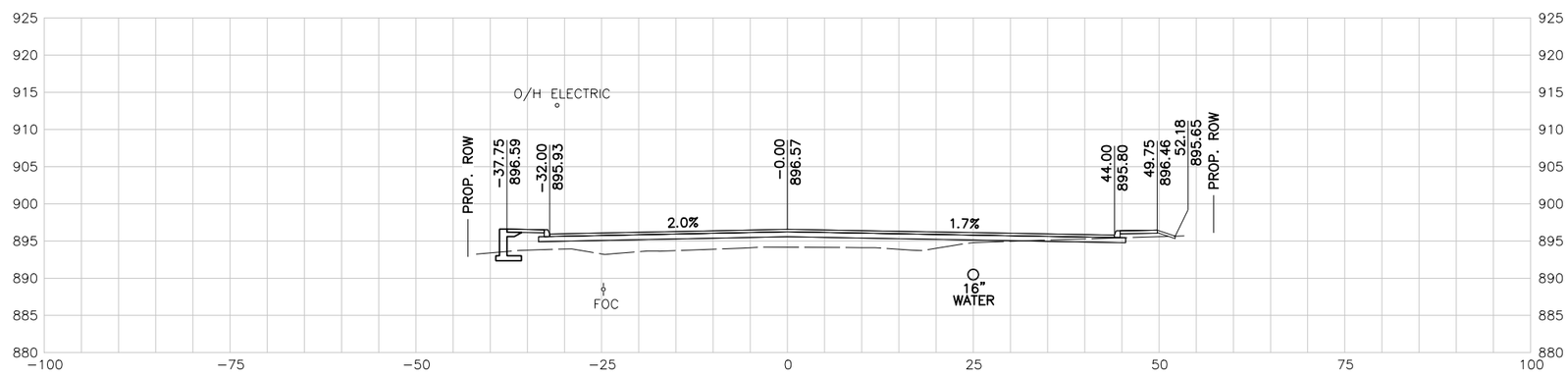

199+50.00 R1

10 5 0 10 20
SCALE FEET

NOTES:

1. UTILITY LOCATIONS ARE APPROXIMATE AND ARE SHOWN FROM THE BEST INFORMATION PROVIDED BY THE UTILITY COMPANIES AT THE TIME PLANS WERE PREPARED.
2. CONTRACTOR SHALL NOTIFY UTILITY COMPANIES AND LOCATE UTILITIES A MINIMUM OF 48 HOURS BEFORE BEGINNING WORK IN AREA.
3. CALL THE TEXAS STATE WIDE ONE CALL LOCATOR NUMBER 1-800-344-8377 48 HOURS BEFORE BEGINNING ANY EXCAVATION.

   DUE TO FEDERAL REGULATION TITLE 49, PART 192.181, CPS MUST MAINTAIN ACCESS TO GAS VALVES AT ALL TIMES. THE CONTRACTOR MUST PROTECT AND WORK AROUND ANY GAS VALVES THAT ARE IN THE PROJECT AREA.

   THE CONTRACTOR WILL BE RESPONSIBLE FOR PROTECTING ALL EXISTING UTILITIES ADJACENT TO THE WORK AREA.
4. SEE CROSS STREET PLAN AND PROFILE SHEETS AND INTERSECTION LAYOUT SHEETS FOR ADDITIONAL INFORMATION AT THE CROSS STREET.
5. SEE DRIVEWAY SUMMARY FOR ADDITIONAL INFORMATION PERTAINING TO DRIVEWAYS.

PRELIMINARY

90% SUBMITTAL
FOR INTERIM REVIEW ONLY
NOT FOR CONSTRUCTION, BIDDING, OR PERMIT PURPOSES.

CP&Y

ENGINEER JAIME AGUILAR
P.E. No. 87606 DATE 2/23/2017

BEXAR COUNTY
PUBLIC WORKS DEPARTMENT

NO	DATE	DESCRIPTION	DWG	CHK

REVISIONS

CP&Y
12500 SAN PEDRO AVENUE, SUITE 450
SAN ANTONIO, TEXAS 78216
TEL (210) 494-8004
FAX (210) 494-8286
T.B.P.E. FIRM # 1741

TALLEY ROAD

CROSS SECTIONS

SHEET 68 OF 88

PROJECT NUMBER:		SHEET NO.	
		616	
DESIGNED BY:	CP&Y	ROADWAY/HIGHWAY:	
CHECKED BY:	CP&Y	TALLEY ROAD	
DRAWN BY:	CP&Y	STATE	COUNTY
CHECKED BY:	CP&Y	TEXAS	BEXAR

cpybw_ANSIB.tbl
cpypdf_ANSIB.pltcfg
pw:/Active Projects/BEXA14048.01/8.00 Plans and Drawings/8.10 Base Files/14048RDxsec_90.dgn
2/23/2017 4:31:30 PM mberan
pw:/Active Projects/BEXA14048.01/8.00 Plans and Drawings/8.10 Base Files/14048RDxsec_90.dgn

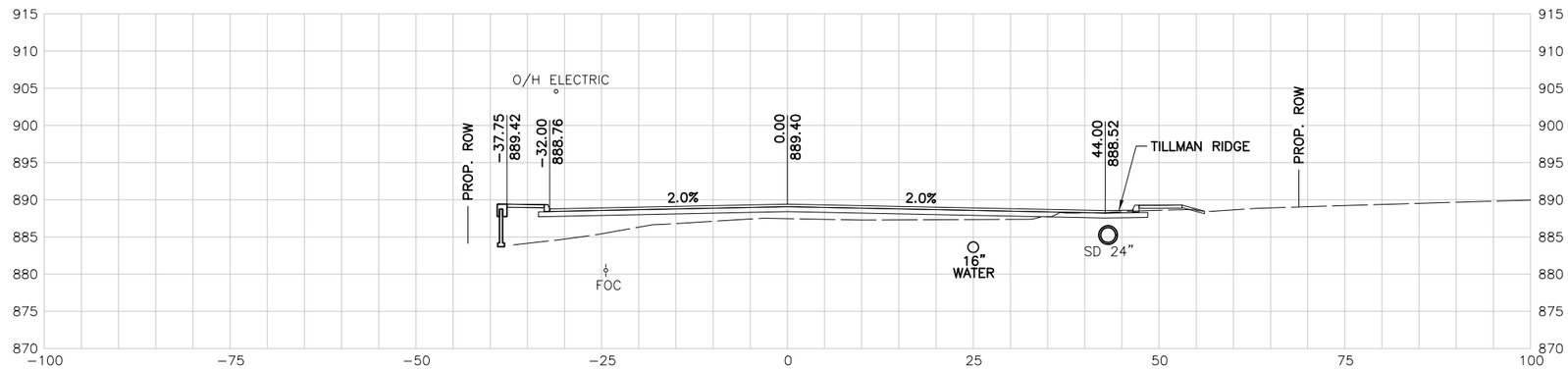

202+00.00 R1

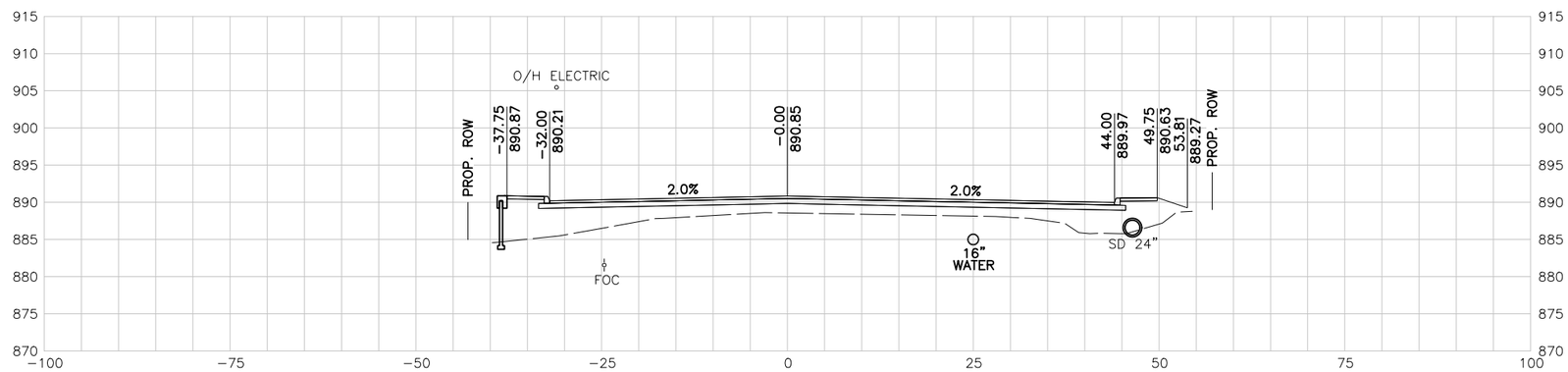

201+50.00 R1

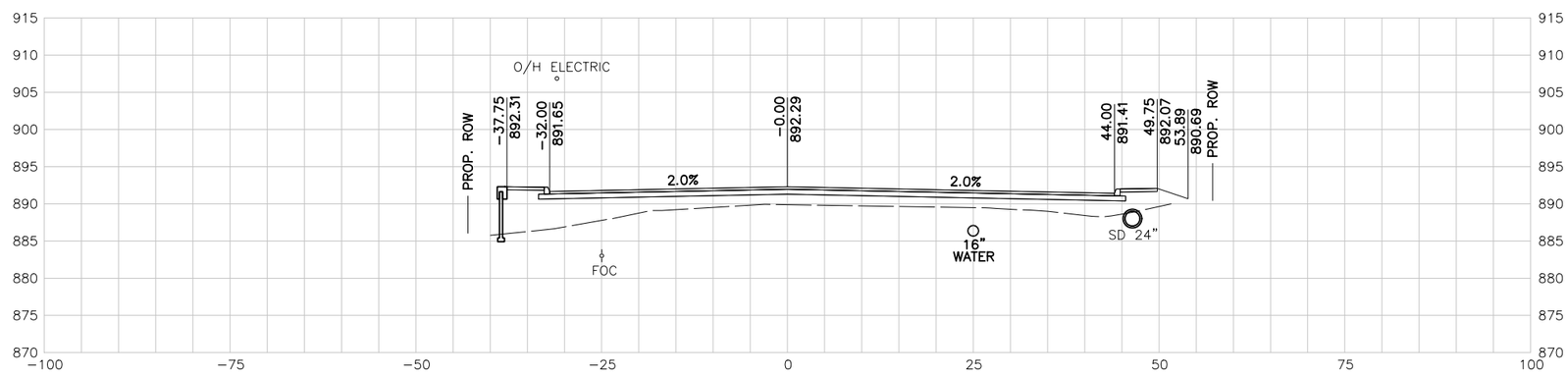

201+00.00 R1

10 5 0 10 20
SCALE FEET

NOTES:

1. UTILITY LOCATIONS ARE APPROXIMATE AND ARE SHOWN FROM THE BEST INFORMATION PROVIDED BY THE UTILITY COMPANIES AT THE TIME PLANS WERE PREPARED.
2. CONTRACTOR SHALL NOTIFY UTILITY COMPANIES AND LOCATE UTILITIES A MINIMUM OF 48 HOURS BEFORE BEGINNING WORK IN AREA.
3. CALL THE TEXAS STATE WIDE ONE CALL LOCATOR NUMBER 1-800-344-8377 48 HOURS BEFORE BEGINNING ANY EXCAVATION.

   DUE TO FEDERAL REGULATION TITLE 49, PART 192.181, CPS MUST MAINTAIN ACCESS TO GAS VALVES AT ALL TIMES. THE CONTRACTOR MUST PROTECT AND WORK AROUND ANY GAS VALVES THAT ARE IN THE PROJECT AREA.

   THE CONTRACTOR WILL BE RESPONSIBLE FOR PROTECTING ALL EXISTING UTILITIES ADJACENT TO THE WORK AREA.
4. SEE CROSS STREET PLAN AND PROFILE SHEETS AND INTERSECTION LAYOUT SHEETS FOR ADDITIONAL INFORMATION AT THE CROSS STREET.
5. SEE DRIVEWAY SUMMARY FOR ADDITIONAL INFORMATION PERTAINING TO DRIVEWAYS.

PRELIMINARY

90% SUBMITTAL
FOR INTERIM REVIEW ONLY
NOT FOR CONSTRUCTION, BIDDING, OR PERMIT PURPOSES.

CP&Y

ENGINEER JAIME AGUILAR
P.E. No. 87606 DATE 2/23/2017

BEXAR COUNTY
PUBLIC WORKS DEPARTMENT

NO	DATE	DESCRIPTION	DWG	CHK

REVISIONS

CP&Y
12500 SAN PEDRO AVENUE, SUITE 450
SAN ANTONIO, TEXAS 78216
TEL (210) 494-8004
FAX (210) 494-8286
T.B.P.E. FIRM # 1741

TALLEY ROAD

CROSS SECTIONS

SHEET 69 OF 88

PROJECT NUMBER:		SHEET NO.	
		617	
DESIGNED BY:	CP&Y	ROADWAY/HIGHWAY:	
CHECKED BY:	CP&Y	TALLEY ROAD	
DRAWN BY:	CP&Y	STATE	COUNTY
CHECKED BY:	CP&Y	TEXAS	BEXAR

cpybw_ANSIB.tbl
cpypdf_ANSIB.pltcfg
pw:/Active Projects/BEXA14048.01/8.00 Plans and Drawings/8.10 Base Files/14048RDxsec_90.dgn
2/23/2017 4:31:30 PM mberan
pw:/Active Projects/BEXA14048.01/8.00 Plans and Drawings/8.10 Base Files/14048RDxsec_90.dgn

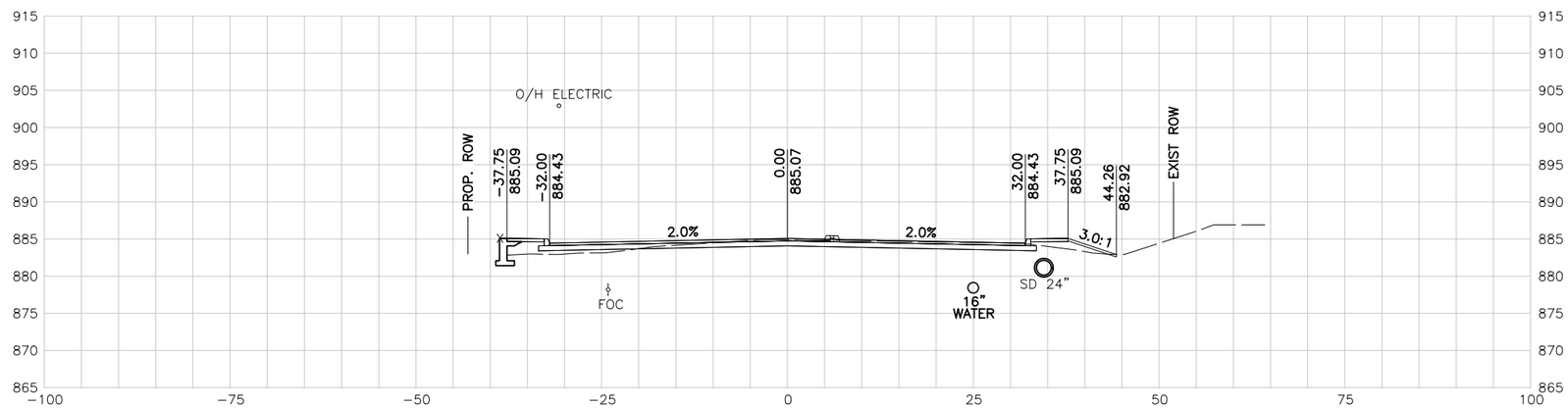

203+50.00 R1

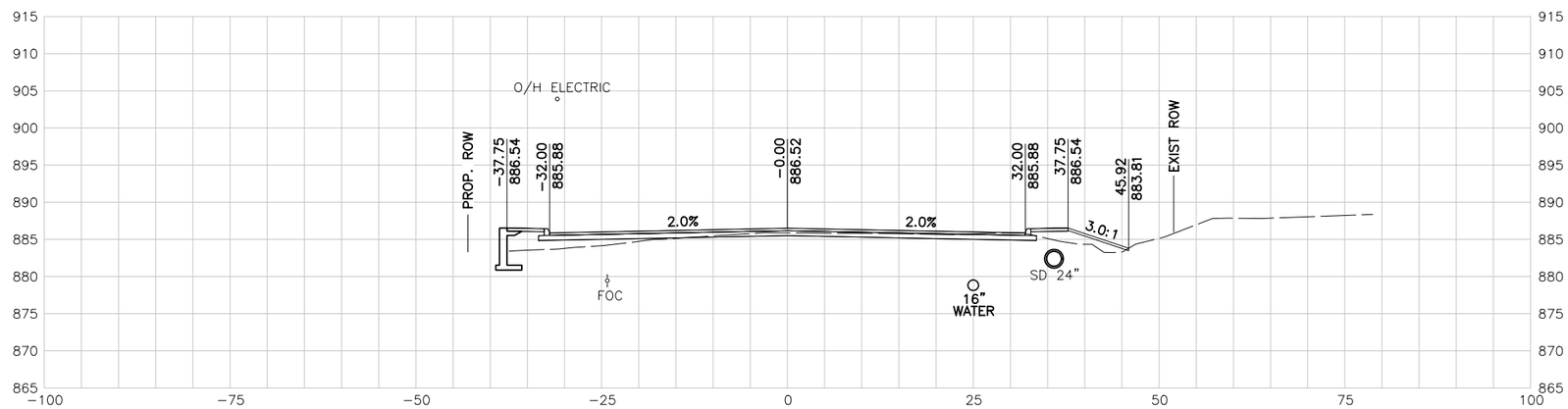

203+00.00 R1

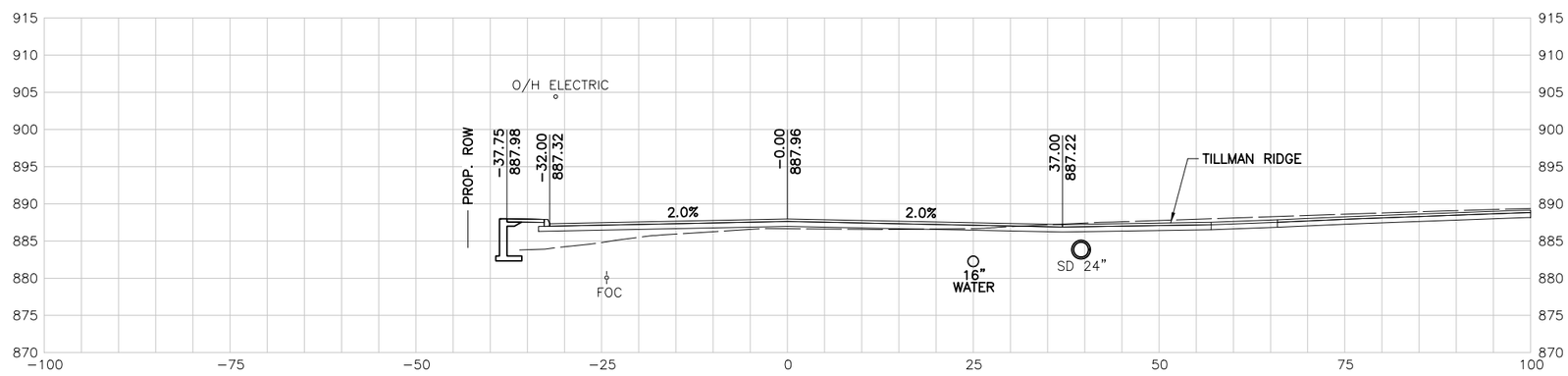

202+50.00 R1

10 5 0 10 20
SCALE FEET

NOTES:

1. UTILITY LOCATIONS ARE APPROXIMATE AND ARE SHOWN FROM THE BEST INFORMATION PROVIDED BY THE UTILITY COMPANIES AT THE TIME PLANS WERE PREPARED.
2. CONTRACTOR SHALL NOTIFY UTILITY COMPANIES AND LOCATE UTILITIES A MINIMUM OF 48 HOURS BEFORE BEGINNING WORK IN AREA.
3. CALL THE TEXAS STATE WIDE ONE CALL LOCATOR NUMBER 1-800-344-8377 48 HOURS BEFORE BEGINNING ANY EXCAVATION.

   DUE TO FEDERAL REGULATION TITLE 49, PART 192.181, CPS MUST MAINTAIN ACCESS TO GAS VALVES AT ALL TIMES. THE CONTRACTOR MUST PROTECT AND WORK AROUND ANY GAS VALVES THAT ARE IN THE PROJECT AREA.

   THE CONTRACTOR WILL BE RESPONSIBLE FOR PROTECTING ALL EXISTING UTILITIES ADJACENT TO THE WORK AREA.
4. SEE CROSS STREET PLAN AND PROFILE SHEETS AND INTERSECTION LAYOUT SHEETS FOR ADDITIONAL INFORMATION AT THE CROSS STREET.
5. SEE DRIVEWAY SUMMARY FOR ADDITIONAL INFORMATION PERTAINING TO DRIVEWAYS.

PRELIMINARY

90% SUBMITTAL
FOR INTERIM REVIEW ONLY
NOT FOR CONSTRUCTION, BIDDING, OR PERMIT PURPOSES.

CP&Y

ENGINEER JAIME AGUILAR
P.E. No. 87606 DATE 2/23/2017

BEXAR COUNTY
PUBLIC WORKS DEPARTMENT

NO	DATE	DESCRIPTION	DWG	CHK

REVISIONS

CP&Y
12500 SAN PEDRO AVENUE, SUITE 450
SAN ANTONIO, TEXAS 78216
TEL (210) 494-8004
FAX (210) 494-8286
T.B.P.E. FIRM # 1741

TALLEY ROAD

CROSS SECTIONS

SHEET 70 OF 88

PROJECT NUMBER:		SHEET NO.	
		618	
DESIGNED BY:	CP&Y	ROADWAY/HIGHWAY:	
CHECKED BY:	CP&Y	TALLEY ROAD	
DRAWN BY:	CP&Y	STATE	COUNTY
CHECKED BY:	CP&Y	TEXAS	BEXAR

cpybw_ANSIB.tbl
cpypdf_ANSIB.pltcfg
pw:/Active Projects/BEXA14048.01/8.00 Plans and Drawings/8.10 Base Files/14048RDxsec_90.dgn
2/23/2017 4:31:31 PM mberan
pw:/Active Projects/BEXA14048.01/8.00 Plans and Drawings/8.10 Base Files/14048RDxsec_90.dgn

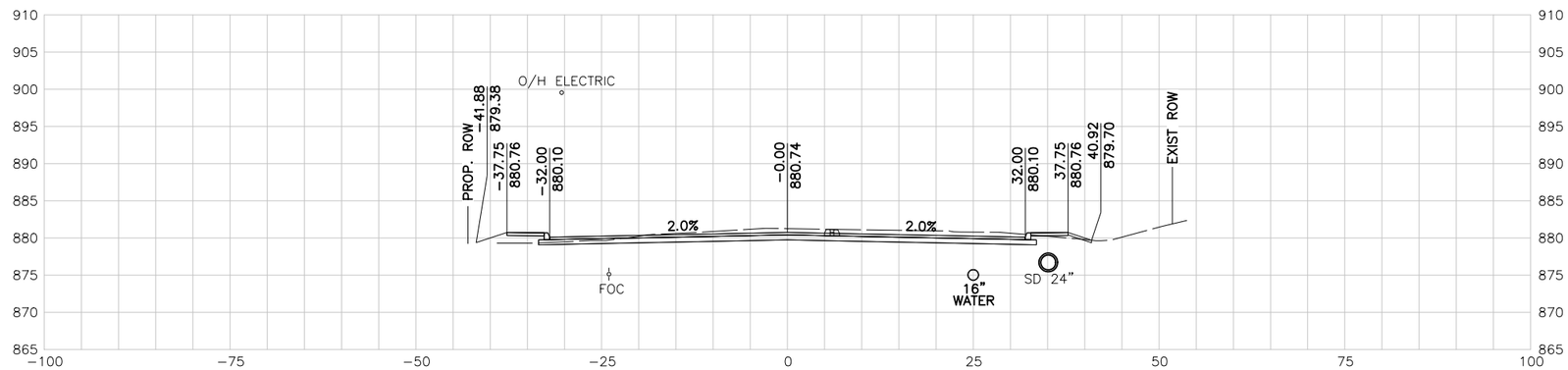

205+00.00 R1

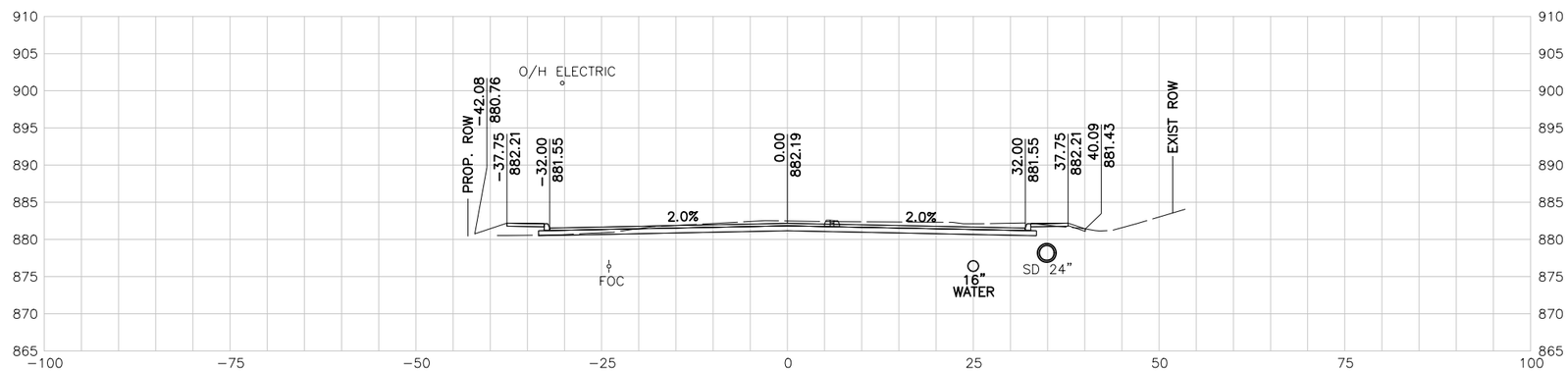

204+50.00 R1

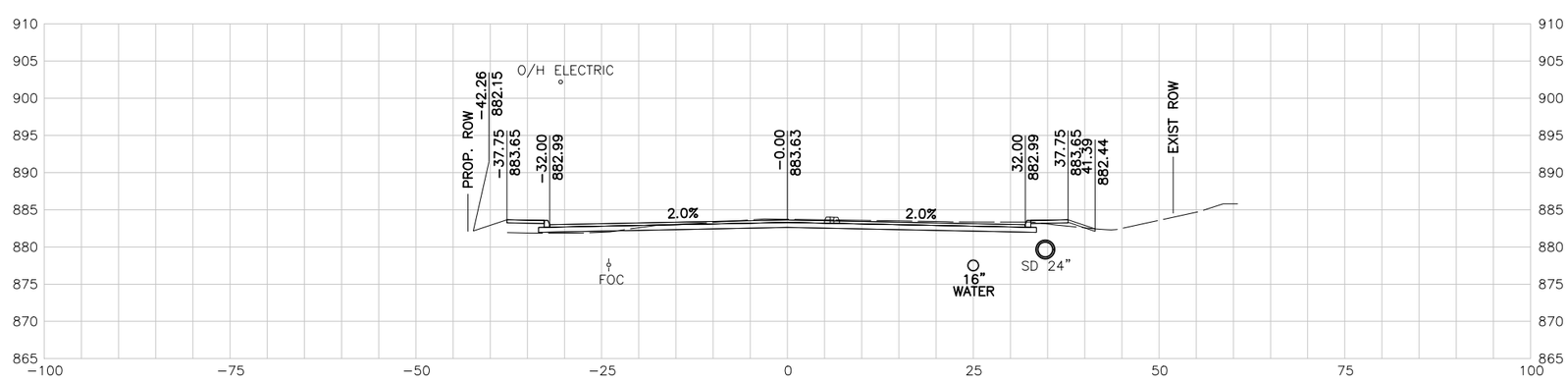

204+00.00 R1

10 5 0 10 20
SCALE FEET

NOTES:

1. UTILITY LOCATIONS ARE APPROXIMATE AND ARE SHOWN FROM THE BEST INFORMATION PROVIDED BY THE UTILITY COMPANIES AT THE TIME PLANS WERE PREPARED.
2. CONTRACTOR SHALL NOTIFY UTILITY COMPANIES AND LOCATE UTILITIES A MINIMUM OF 48 HOURS BEFORE BEGINNING WORK IN AREA.
3. CALL THE TEXAS STATE WIDE ONE CALL LOCATOR NUMBER 1-800-344-8377 48 HOURS BEFORE BEGINNING ANY EXCAVATION.

   DUE TO FEDERAL REGULATION TITLE 49, PART 192.181, CPS MUST MAINTAIN ACCESS TO GAS VALVES AT ALL TIMES. THE CONTRACTOR MUST PROTECT AND WORK AROUND ANY GAS VALVES THAT ARE IN THE PROJECT AREA.

   THE CONTRACTOR WILL BE RESPONSIBLE FOR PROTECTING ALL EXISTING UTILITIES ADJACENT TO THE WORK AREA.
4. SEE CROSS STREET PLAN AND PROFILE SHEETS AND INTERSECTION LAYOUT SHEETS FOR ADDITIONAL INFORMATION AT THE CROSS STREET.
5. SEE DRIVEWAY SUMMARY FOR ADDITIONAL INFORMATION PERTAINING TO DRIVEWAYS.

PRELIMINARY

90% SUBMITTAL
FOR INTERIM REVIEW ONLY
NOT FOR CONSTRUCTION, BIDDING, OR PERMIT PURPOSES.

CP&Y

ENGINEER JAIME AGUILAR
P.E. No. 87606 DATE 2/23/2017

BEXAR COUNTY
PUBLIC WORKS DEPARTMENT

NO	DATE	DESCRIPTION	DWG	CHK

REVISIONS

CP&Y
12500 SAN PEDRO AVENUE, SUITE 450
SAN ANTONIO, TEXAS 78216
TEL (210) 494-8004
FAX (210) 494-8286
T.B.P.E. FIRM # 1741

TALLEY ROAD

CROSS SECTIONS

SHEET 71 OF 88

PROJECT NUMBER:		SHEET NO.	
		619	
DESIGNED BY:	CP&Y	ROADWAY/HIGHWAY:	
CHECKED BY:	CP&Y	TALLEY ROAD	
DRAWN BY:	CP&Y	STATE	COUNTY
CHECKED BY:	CP&Y	TEXAS	BEXAR

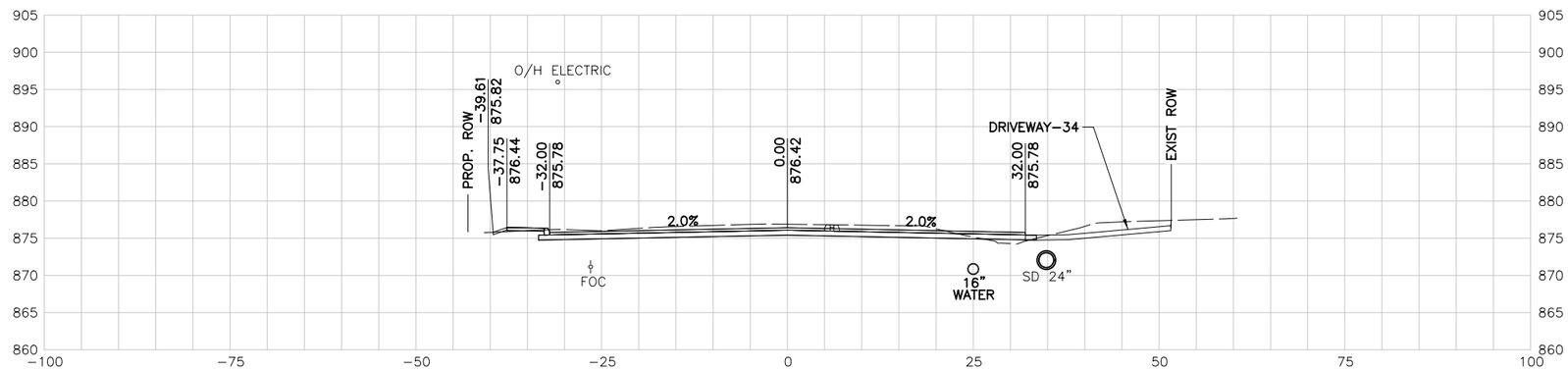

206+50.00 R1

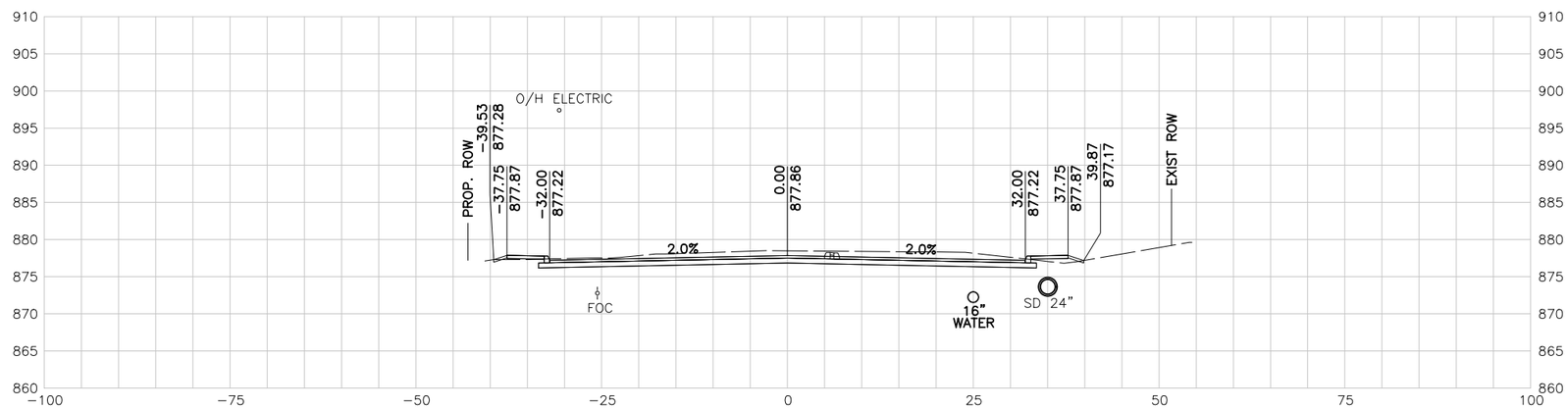

206+00.00 R1

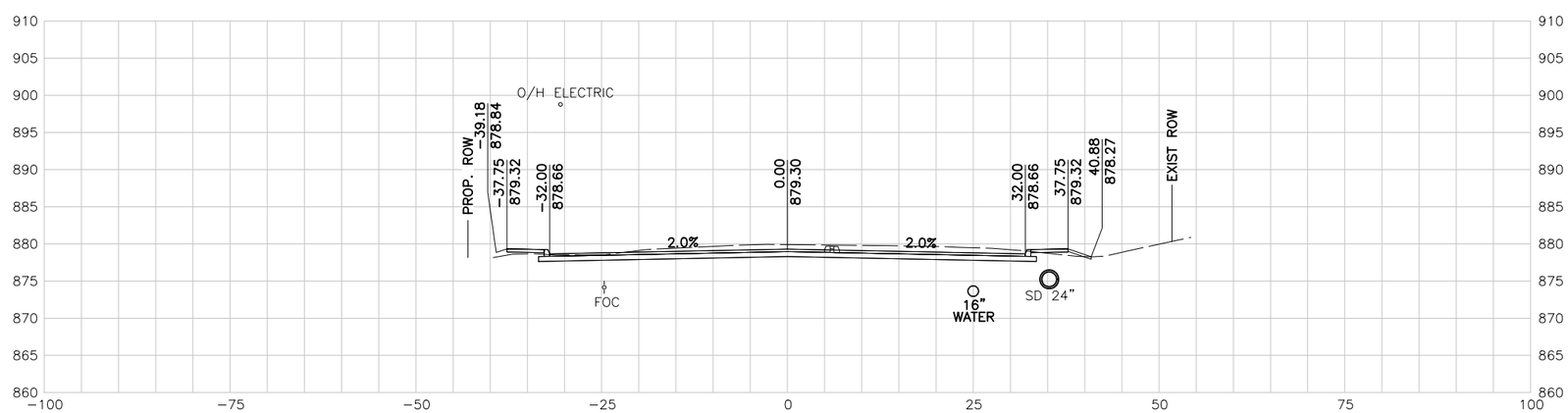

205+50.00 R1

10 5 0 10 20
SCALE FEET

NOTES:

1. UTILITY LOCATIONS ARE APPROXIMATE AND ARE SHOWN FROM THE BEST INFORMATION PROVIDED BY THE UTILITY COMPANIES AT THE TIME PLANS WERE PREPARED.
2. CONTRACTOR SHALL NOTIFY UTILITY COMPANIES AND LOCATE UTILITIES A MINIMUM OF 48 HOURS BEFORE BEGINNING WORK IN AREA.
3. CALL THE TEXAS STATE WIDE ONE CALL LOCATOR NUMBER 1-800-344-8377 48 HOURS BEFORE BEGINNING ANY EXCAVATION.

   DUE TO FEDERAL REGULATION TITLE 49, PART 192.181, CPS MUST MAINTAIN ACCESS TO GAS VALVES AT ALL TIMES. THE CONTRACTOR MUST PROTECT AND WORK AROUND ANY GAS VALVES THAT ARE IN THE PROJECT AREA.

   THE CONTRACTOR WILL BE RESPONSIBLE FOR PROTECTING ALL EXISTING UTILITIES ADJACENT TO THE WORK AREA.
4. SEE CROSS STREET PLAN AND PROFILE SHEETS AND INTERSECTION LAYOUT SHEETS FOR ADDITIONAL INFORMATION AT THE CROSS STREET.
5. SEE DRIVEWAY SUMMARY FOR ADDITIONAL INFORMATION PERTAINING TO DRIVEWAYS.

PRELIMINARY

90% SUBMITTAL
FOR INTERIM REVIEW ONLY
NOT FOR CONSTRUCTION, BIDDING, OR PERMIT PURPOSES.

CP&Y

ENGINEER JAIME AGUILAR
P.E. No. 87606 DATE 2/23/2017

BEXAR COUNTY
PUBLIC WORKS DEPARTMENT

NO	DATE	DESCRIPTION	DWG	CHK

REVISIONS

CP&Y
12500 SAN PEDRO AVENUE, SUITE 450
SAN ANTONIO, TEXAS 78216
TEL (210) 494-8004
FAX (210) 494-8286
T.B.P.E. FIRM # 1741

TALLEY ROAD

CROSS SECTIONS

SHEET 72 OF 88

PROJECT NUMBER:		SHEET NO.
		620
DESIGNED BY: CP&Y	ROADWAY/HIGHWAY:	
CHECKED BY: CP&Y	TALLEY ROAD	
DRAWN BY: CP&Y	STATE	COUNTY
CHECKED BY: CP&Y	TEXAS	BEXAR

cpybw_ANSIB.tbl
cpypdf_ANSIB.pltcfg
pw:/Active Projects/BEXA14048.01/8.00 Plans and Drawings/8.10 Base Files/14048RDxsec_90.dgn
2/23/2017 4:31:32 PM mberon
pw:/Active Projects/BEXA14048.01/8.00 Plans and Drawings/8.10 Base Files/14048RDxsec_90.dgn

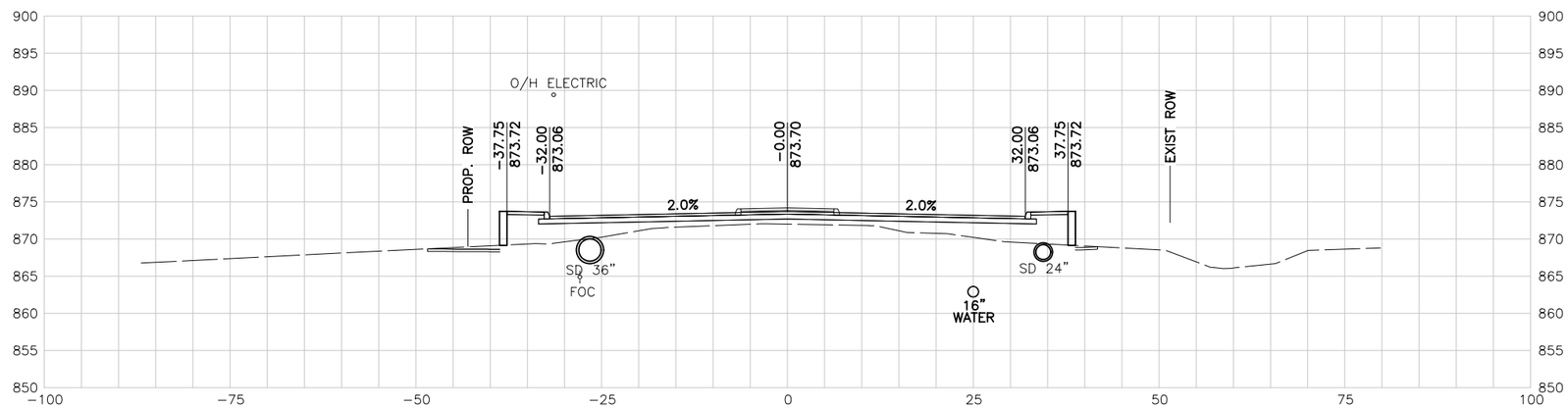

208+00.00 R1

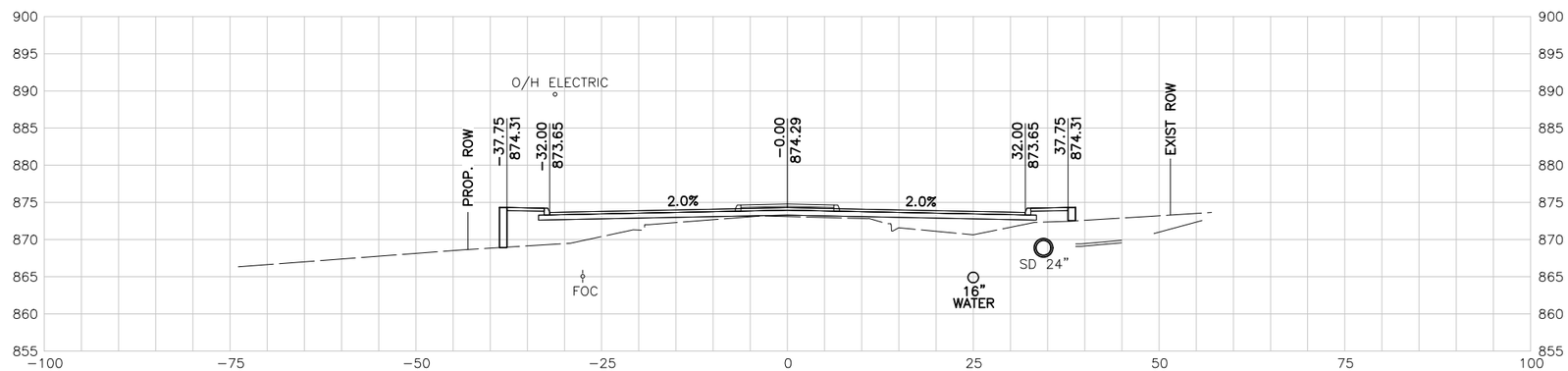

207+50.00 R1

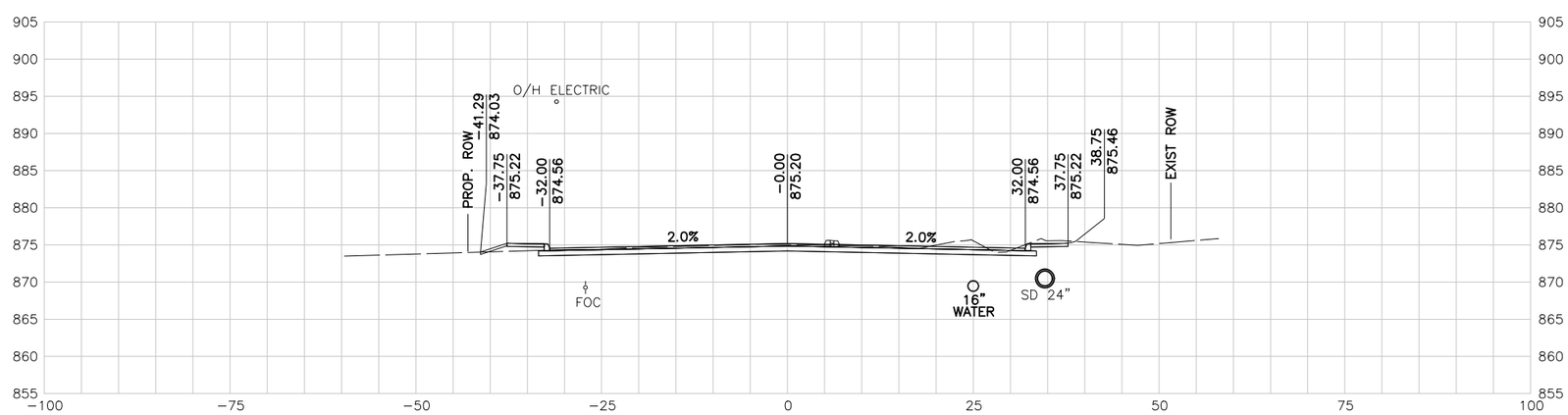

207+00.00 R1

10 5 0 10 20
SCALE FEET

NOTES:

1. UTILITY LOCATIONS ARE APPROXIMATE AND ARE SHOWN FROM THE BEST INFORMATION PROVIDED BY THE UTILITY COMPANIES AT THE TIME PLANS WERE PREPARED.
2. CONTRACTOR SHALL NOTIFY UTILITY COMPANIES AND LOCATE UTILITIES A MINIMUM OF 48 HOURS BEFORE BEGINNING WORK IN AREA.
3. CALL THE TEXAS STATE WIDE ONE CALL LOCATOR NUMBER 1-800-344-8377 48 HOURS BEFORE BEGINNING ANY EXCAVATION.

   DUE TO FEDERAL REGULATION TITLE 49, PART 192.181, CPS MUST MAINTAIN ACCESS TO GAS VALVES AT ALL TIMES. THE CONTRACTOR MUST PROTECT AND WORK AROUND ANY GAS VALVES THAT ARE IN THE PROJECT AREA.

   THE CONTRACTOR WILL BE RESPONSIBLE FOR PROTECTING ALL EXISTING UTILITIES ADJACENT TO THE WORK AREA.
4. SEE CROSS STREET PLAN AND PROFILE SHEETS AND INTERSECTION LAYOUT SHEETS FOR ADDITIONAL INFORMATION AT THE CROSS STREET.
5. SEE DRIVEWAY SUMMARY FOR ADDITIONAL INFORMATION PERTAINING TO DRIVEWAYS.

PRELIMINARY

90% SUBMITTAL
FOR INTERIM REVIEW ONLY
NOT FOR CONSTRUCTION, BIDDING, OR PERMIT PURPOSES.

CP&Y

ENGINEER JAIME AGUILAR
P.E. No. 87606 DATE 2/23/2017

BEXAR COUNTY
PUBLIC WORKS DEPARTMENT

NO	DATE	DESCRIPTION	DWG	CHK

REVISIONS

CP&Y
12500 SAN PEDRO AVENUE, SUITE 450
SAN ANTONIO, TEXAS 78216
TEL (210) 494-8004
FAX (210) 494-8286
T.B.P.E. FIRM # 1741

TALLEY ROAD

CROSS SECTIONS

SHEET 73 OF 88

PROJECT NUMBER:		SHEET NO.
		621
DESIGNED BY: CP&Y	ROADWAY/HIGHWAY:	
CHECKED BY: CP&Y	TALLEY ROAD	
DRAWN BY: CP&Y	STATE	COUNTY
CHECKED BY: CP&Y	TEXAS	BEXAR

2/23/2017 4:31:32 PM mberon cpybw_ANSIB.tbl cpypdf_ANSIB.pltcfg pw:/Active Projects/BEXA14048.01/8.00 Plans and Drawings/8.10 Base Files/14048RDxsec_90.dgn

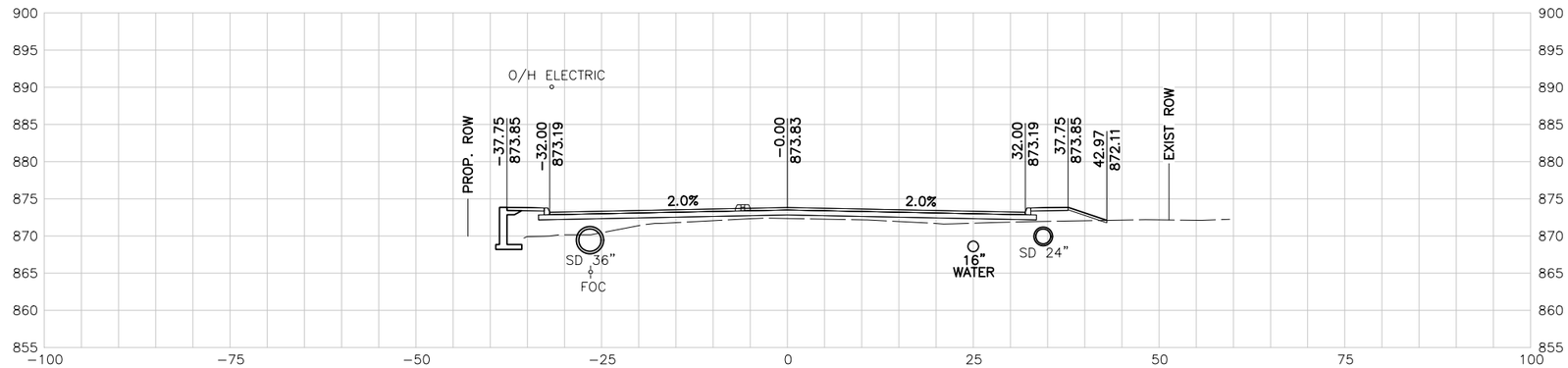

209+50.00 R1

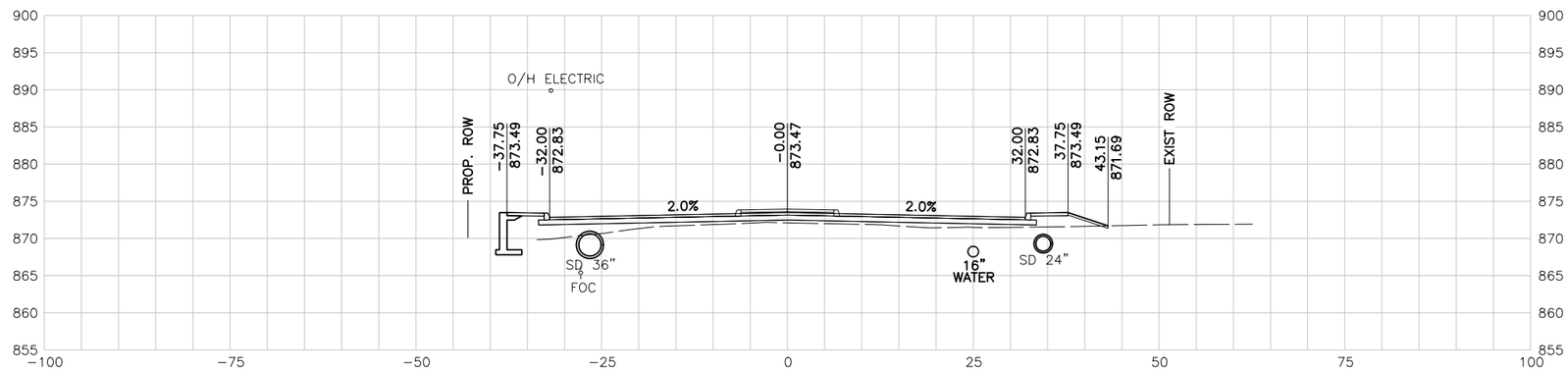

209+00.00 R1

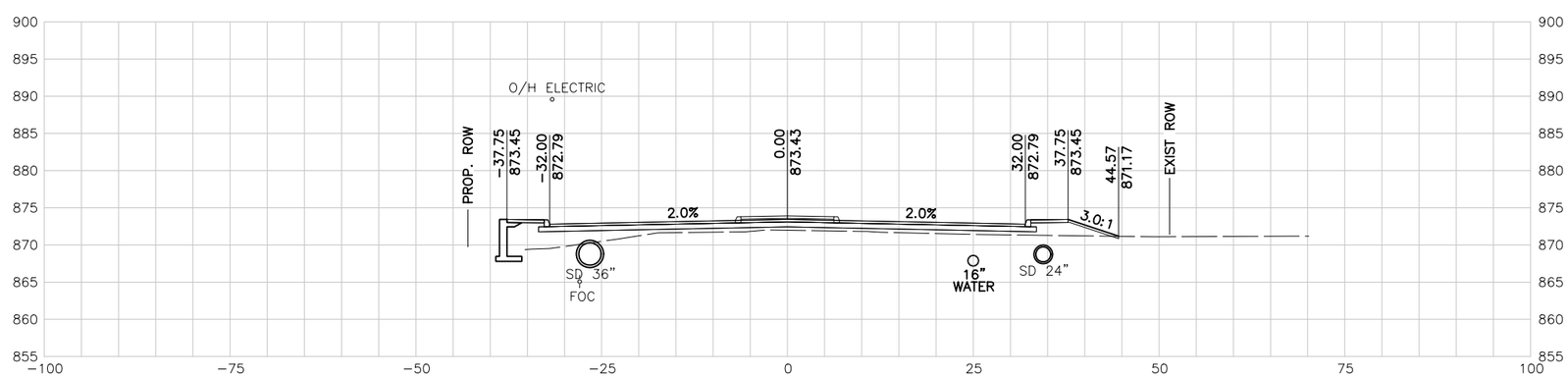

208+50.00 R1

10 5 0 10 20
SCALE FEET

NOTES:

1. UTILITY LOCATIONS ARE APPROXIMATE AND ARE SHOWN FROM THE BEST INFORMATION PROVIDED BY THE UTILITY COMPANIES AT THE TIME PLANS WERE PREPARED.
2. CONTRACTOR SHALL NOTIFY UTILITY COMPANIES AND LOCATE UTILITIES A MINIMUM OF 48 HOURS BEFORE BEGINNING WORK IN AREA.
3. CALL THE TEXAS STATE WIDE ONE CALL LOCATOR NUMBER 1-800-344-8377 48 HOURS BEFORE BEGINNING ANY EXCAVATION.

   DUE TO FEDERAL REGULATION TITLE 49, PART 192.181, CPS MUST MAINTAIN ACCESS TO GAS VALVES AT ALL TIMES. THE CONTRACTOR MUST PROTECT AND WORK AROUND ANY GAS VALVES THAT ARE IN THE PROJECT AREA.

   THE CONTRACTOR WILL BE RESPONSIBLE FOR PROTECTING ALL EXISTING UTILITIES ADJACENT TO THE WORK AREA.
4. SEE CROSS STREET PLAN AND PROFILE SHEETS AND INTERSECTION LAYOUT SHEETS FOR ADDITIONAL INFORMATION AT THE CROSS STREET.
5. SEE DRIVEWAY SUMMARY FOR ADDITIONAL INFORMATION PERTAINING TO DRIVEWAYS.

PRELIMINARY

90% SUBMITTAL
FOR INTERIM REVIEW ONLY
NOT FOR CONSTRUCTION, BIDDING, OR PERMIT PURPOSES.

CP&Y

ENGINEER JAIME AGUILAR
P.E. No. 87606 DATE 2/23/2017

BEXAR COUNTY
PUBLIC WORKS DEPARTMENT

NO	DATE	DESCRIPTION	DWG	CHK

REVISIONS

CP&Y
12500 SAN PEDRO AVENUE, SUITE 450
SAN ANTONIO, TEXAS 78216
TEL (210) 494-8004
FAX (210) 494-8286
T.B.P.E. FIRM # 1741

TALLEY ROAD

CROSS SECTIONS

SHEET 74 OF 88

PROJECT NUMBER:		SHEET NO.	
		622	
DESIGNED BY:	CP&Y	ROADWAY/HIGHWAY:	
CHECKED BY:	CP&Y	TALLEY ROAD	
DRAWN BY:	CP&Y	STATE	COUNTY
CHECKED BY:	CP&Y	TEXAS	BEXAR

cpybw_ANSIB.tbl
cpypdf_ANSIB.pltcfg
pw:/Active Projects/BEXA14048.01/8.00 Plans and Drawings/8.10 Base Files/14048RDxsec_90.dgn
2/23/2017 4:31:33 PM mberan
pw:/Active Projects/BEXA14048.01/8.00 Plans and Drawings/8.10 Base Files/14048RDxsec_90.dgn

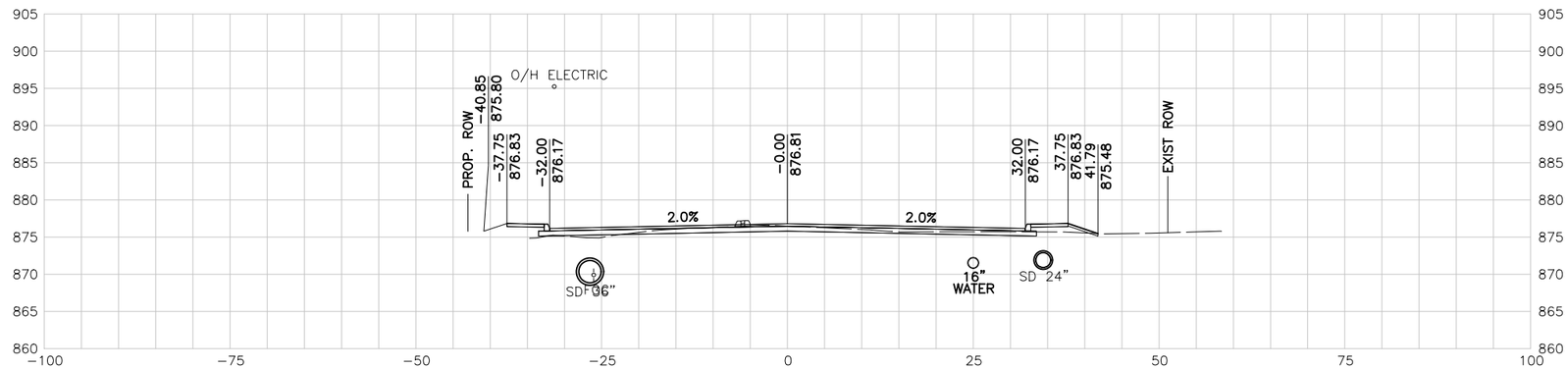

211+00.00 R1

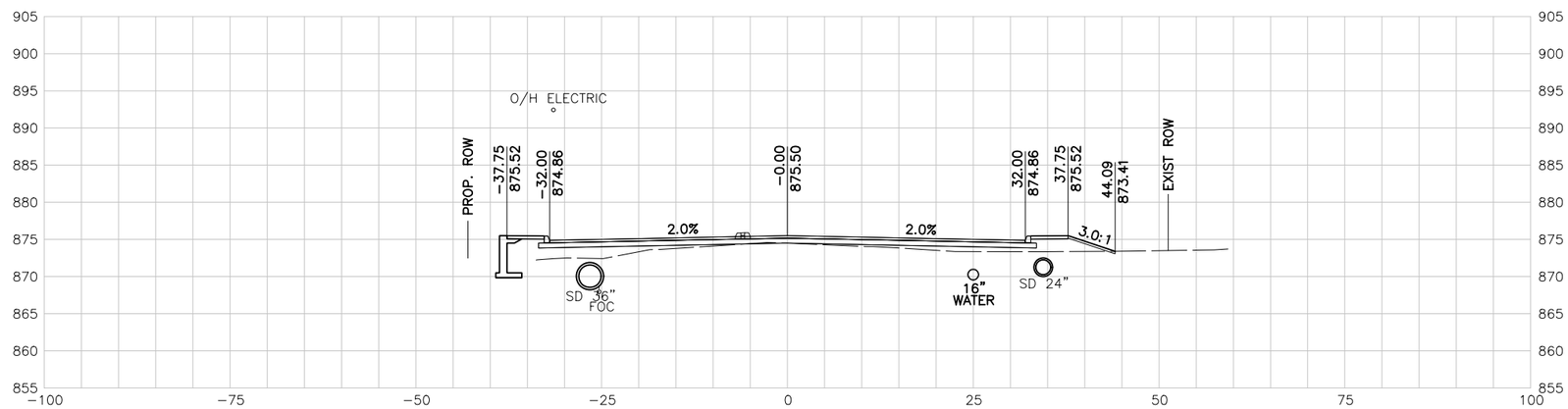

210+50.00 R1

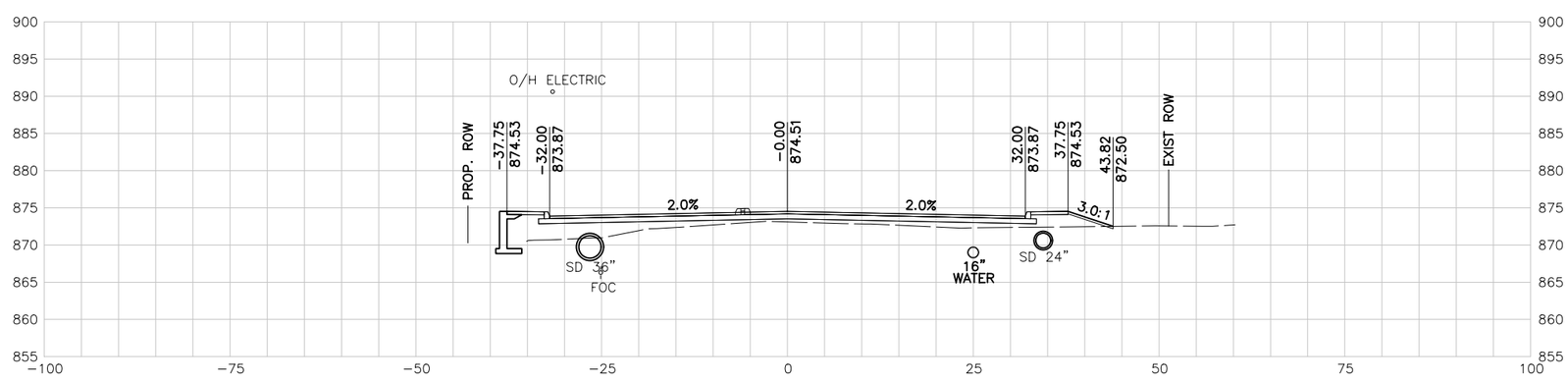

210+00.00 R1

10 5 0 10 20
SCALE FEET

NOTES:

1. UTILITY LOCATIONS ARE APPROXIMATE AND ARE SHOWN FROM THE BEST INFORMATION PROVIDED BY THE UTILITY COMPANIES AT THE TIME PLANS WERE PREPARED.
2. CONTRACTOR SHALL NOTIFY UTILITY COMPANIES AND LOCATE UTILITIES A MINIMUM OF 48 HOURS BEFORE BEGINNING WORK IN AREA.
3. CALL THE TEXAS STATE WIDE ONE CALL LOCATOR NUMBER 1-800-344-8377 48 HOURS BEFORE BEGINNING ANY EXCAVATION.

   DUE TO FEDERAL REGULATION TITLE 49, PART 192.181, CPS MUST MAINTAIN ACCESS TO GAS VALVES AT ALL TIMES. THE CONTRACTOR MUST PROTECT AND WORK AROUND ANY GAS VALVES THAT ARE IN THE PROJECT AREA.

   THE CONTRACTOR WILL BE RESPONSIBLE FOR PROTECTING ALL EXISTING UTILITIES ADJACENT TO THE WORK AREA.
4. SEE CROSS STREET PLAN AND PROFILE SHEETS AND INTERSECTION LAYOUT SHEETS FOR ADDITIONAL INFORMATION AT THE CROSS STREET.
5. SEE DRIVEWAY SUMMARY FOR ADDITIONAL INFORMATION PERTAINING TO DRIVEWAYS.

PRELIMINARY

90% SUBMITTAL
FOR INTERIM REVIEW ONLY
NOT FOR CONSTRUCTION, BIDDING, OR PERMIT PURPOSES.

CP&Y

ENGINEER JAIME AGUILAR
P.E. No. 87606 DATE 2/23/2017

BEXAR COUNTY
PUBLIC WORKS DEPARTMENT

NO	DATE	DESCRIPTION	DWG	CHK

REVISIONS

CP&Y
12500 SAN PEDRO AVENUE, SUITE 450
SAN ANTONIO, TEXAS 78216
TEL (210) 494-8004
FAX (210) 494-8286
T.B.P.E. FIRM # 1741

TALLEY ROAD

CROSS SECTIONS

SHEET 75 OF 88

PROJECT NUMBER:		SHEET NO.
		623
DESIGNED BY: CP&Y	ROADWAY/HIGHWAY:	
CHECKED BY: CP&Y	TALLEY ROAD	
DRAWN BY: CP&Y	STATE	COUNTY
CHECKED BY: CP&Y	TEXAS	BEXAR

2/23/2017 4:31:33 PM mberon cpybw_ANSIB.tbl cpypdf_ANSIB.pltcfg pw:/Active Projects/BEXA14048.01/8.00 Plans and Drawings/8.10 Base Files/14048RDxsec_90.dgn
pw:/Active Projects/BEXA14048.01/8.00 Plans and Drawings/8.10 Base Files/14048RDxsec_90.dgn

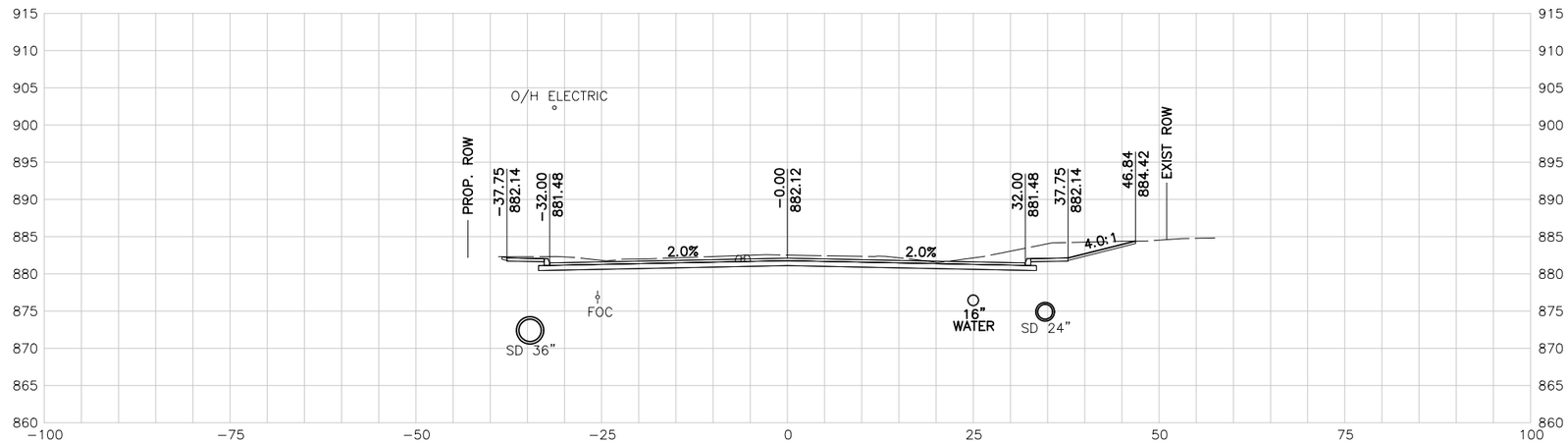

212+50.00 R1

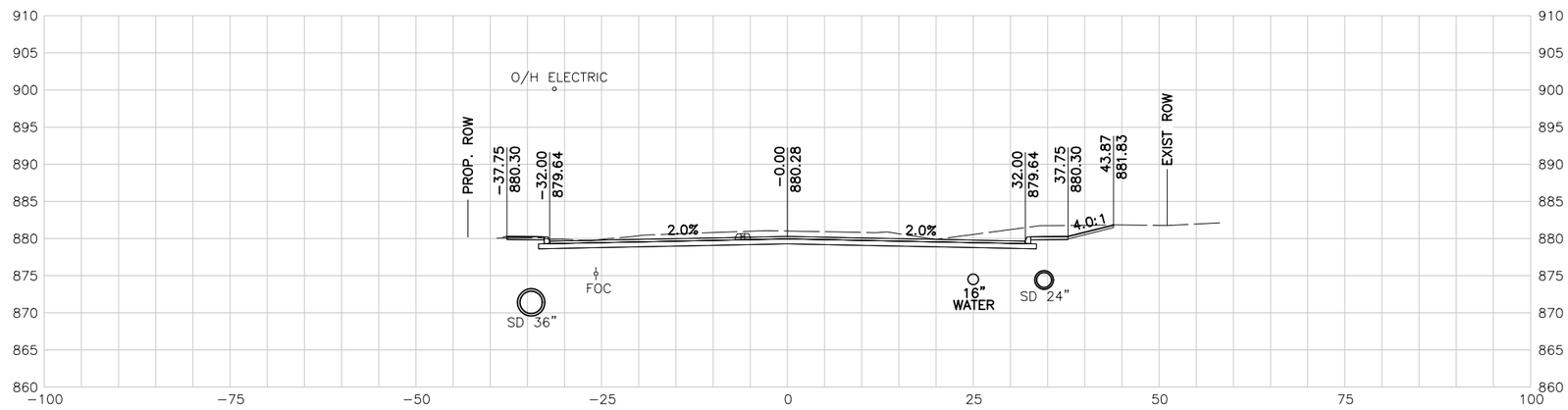

212+00.00 R1

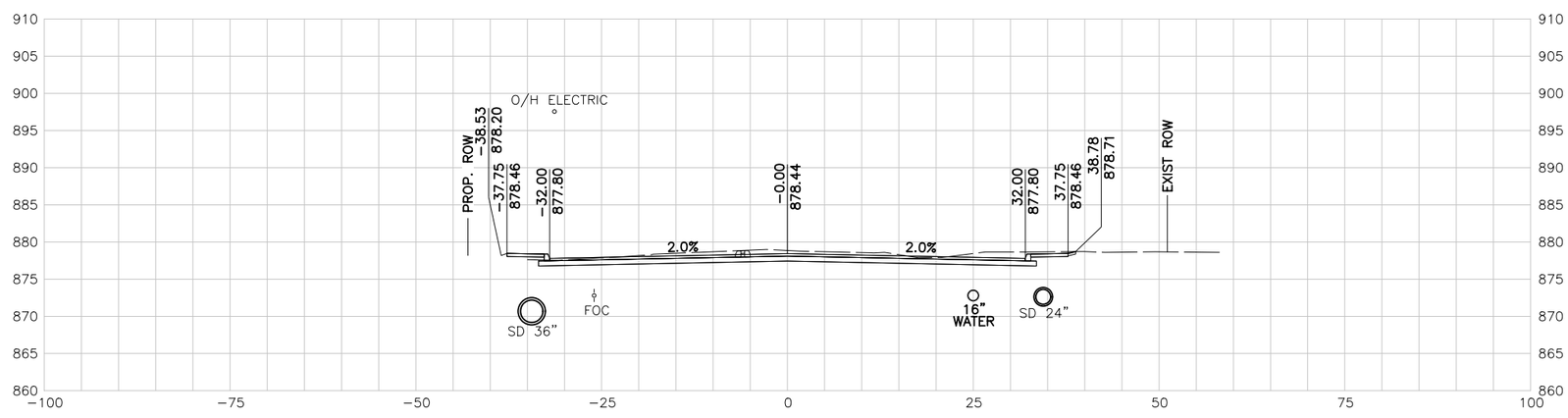

211+50.00 R1

10 5 0 10 20
SCALE FEET

NOTES:

1. UTILITY LOCATIONS ARE APPROXIMATE AND ARE SHOWN FROM THE BEST INFORMATION PROVIDED BY THE UTILITY COMPANIES AT THE TIME PLANS WERE PREPARED.
2. CONTRACTOR SHALL NOTIFY UTILITY COMPANIES AND LOCATE UTILITIES A MINIMUM OF 48 HOURS BEFORE BEGINNING WORK IN AREA.
3. CALL THE TEXAS STATE WIDE ONE CALL LOCATOR NUMBER 1-800-344-8377 48 HOURS BEFORE BEGINNING ANY EXCAVATION.

   DUE TO FEDERAL REGULATION TITLE 49, PART 192.181, CPS MUST MAINTAIN ACCESS TO GAS VALVES AT ALL TIMES. THE CONTRACTOR MUST PROTECT AND WORK AROUND ANY GAS VALVES THAT ARE IN THE PROJECT AREA.

   THE CONTRACTOR WILL BE RESPONSIBLE FOR PROTECTING ALL EXISTING UTILITIES ADJACENT TO THE WORK AREA.
4. SEE CROSS STREET PLAN AND PROFILE SHEETS AND INTERSECTION LAYOUT SHEETS FOR ADDITIONAL INFORMATION AT THE CROSS STREET.
5. SEE DRIVEWAY SUMMARY FOR ADDITIONAL INFORMATION PERTAINING TO DRIVEWAYS.

PRELIMINARY

90% SUBMITTAL
FOR INTERIM REVIEW ONLY
NOT FOR CONSTRUCTION, BIDDING, OR PERMIT PURPOSES.

CP&Y

ENGINEER JAIME AGUILAR
P.E. No. 87606 DATE 2/23/2017

BEXAR COUNTY
PUBLIC WORKS DEPARTMENT

NO	DATE	DESCRIPTION	DWG	CHK

REVISIONS

CP&Y
12500 SAN PEDRO AVENUE, SUITE 450
SAN ANTONIO, TEXAS 78216
TEL (210) 494-8004
FAX (210) 494-8286
T.B.P.E. FIRM # 1741

TALLEY ROAD

CROSS SECTIONS

SHEET 76 OF 88

PROJECT NUMBER:		SHEET NO.	
		624	
DESIGNED BY:	CP&Y	ROADWAY/HIGHWAY:	
CHECKED BY:	CP&Y	TALLEY ROAD	
DRAWN BY:	CP&Y	STATE	COUNTY
CHECKED BY:	CP&Y	TEXAS	BEXAR

cpybw_ANSIB.tbl
cpypdf_ANSIB.pltcfg
pw:/Active Projects/BEXA14048.01/8.00 Plans and Drawings/8.10 Base Files/14048RDxsec_90.dgn
2/23/2017 4:31:34 PM mberan
pw:/Active Projects/BEXA14048.01/8.00 Plans and Drawings/8.10 Base Files/14048RDxsec_90.dgn

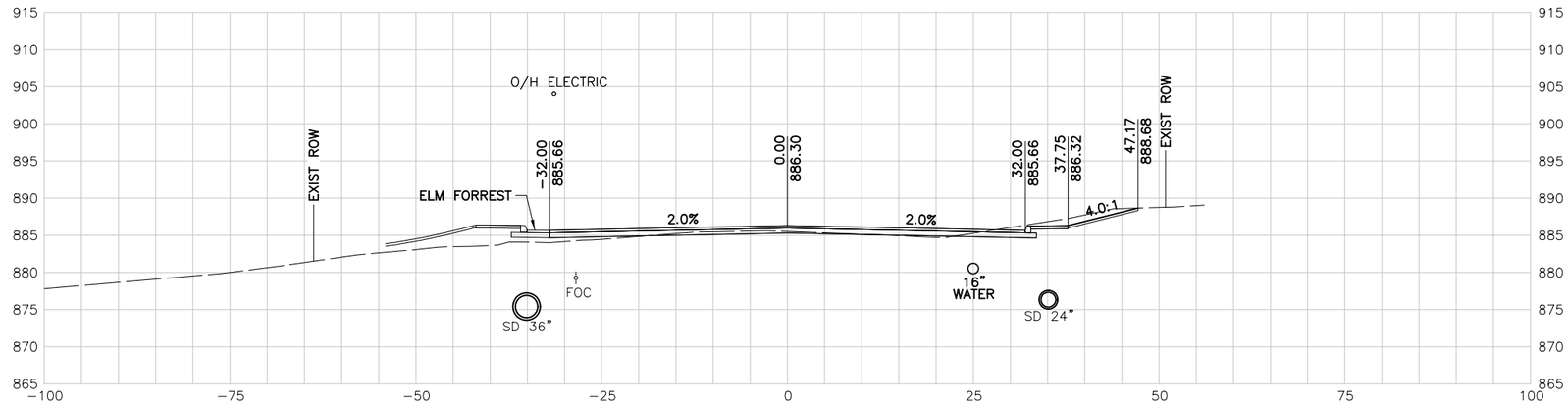

214+00.00 R1

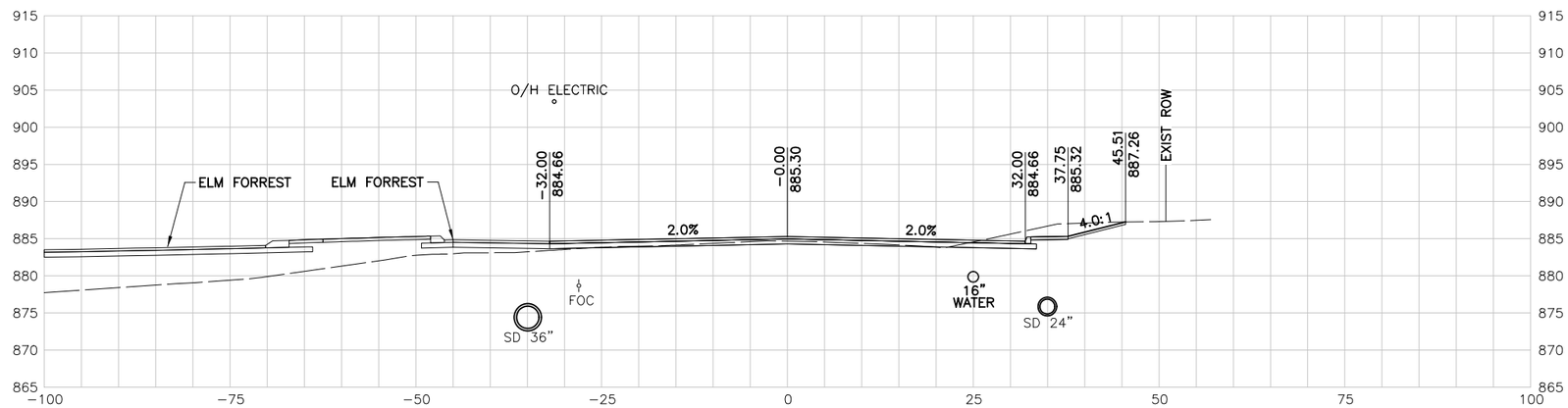

213+50.00 R1

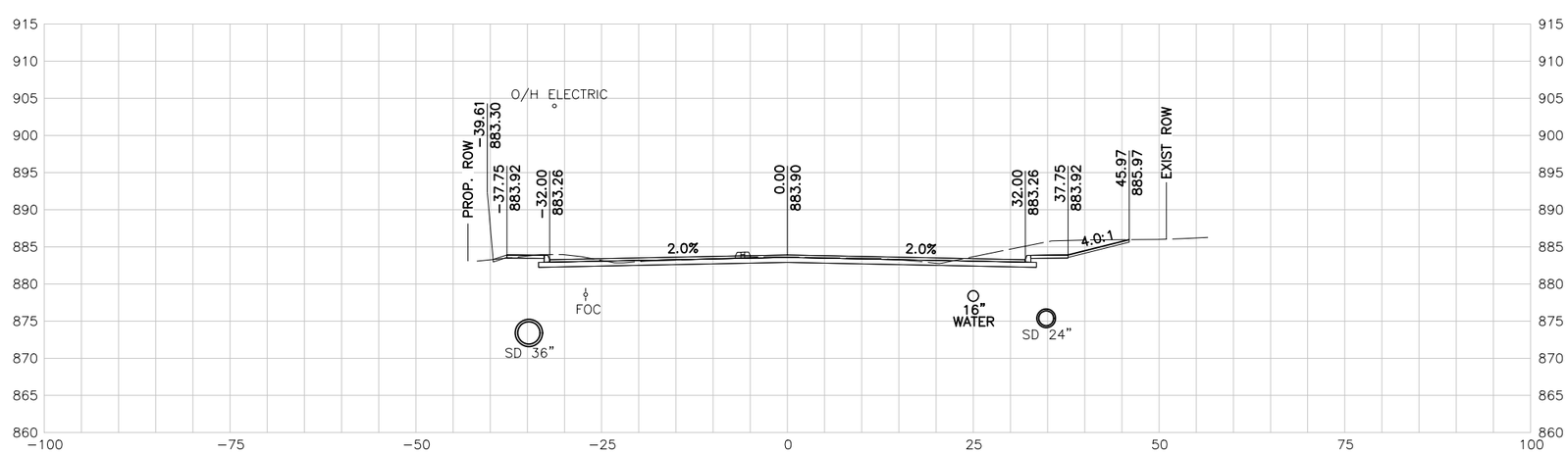

213+00.00 R1

10 5 0 10 20
SCALE FEET

NOTES:

1. UTILITY LOCATIONS ARE APPROXIMATE AND ARE SHOWN FROM THE BEST INFORMATION PROVIDED BY THE UTILITY COMPANIES AT THE TIME PLANS WERE PREPARED.
2. CONTRACTOR SHALL NOTIFY UTILITY COMPANIES AND LOCATE UTILITIES A MINIMUM OF 48 HOURS BEFORE BEGINNING WORK IN AREA.
3. CALL THE TEXAS STATE WIDE ONE CALL LOCATOR NUMBER 1-800-344-8377 48 HOURS BEFORE BEGINNING ANY EXCAVATION.

   DUE TO FEDERAL REGULATION TITLE 49, PART 192.181, CPS MUST MAINTAIN ACCESS TO GAS VALVES AT ALL TIMES. THE CONTRACTOR MUST PROTECT AND WORK AROUND ANY GAS VALVES THAT ARE IN THE PROJECT AREA.

   THE CONTRACTOR WILL BE RESPONSIBLE FOR PROTECTING ALL EXISTING UTILITIES ADJACENT TO THE WORK AREA.
4. SEE CROSS STREET PLAN AND PROFILE SHEETS AND INTERSECTION LAYOUT SHEETS FOR ADDITIONAL INFORMATION AT THE CROSS STREET.
5. SEE DRIVEWAY SUMMARY FOR ADDITIONAL INFORMATION PERTAINING TO DRIVEWAYS.

PRELIMINARY

90% SUBMITTAL
FOR INTERIM REVIEW ONLY
NOT FOR CONSTRUCTION, BIDDING, OR PERMIT PURPOSES.

CP&Y

ENGINEER JAIME AGUILAR
P.E. No. 87606 DATE 2/23/2017

BEXAR COUNTY
PUBLIC WORKS DEPARTMENT

NO	DATE	DESCRIPTION	DWG	CHK

REVISIONS

CP&Y
12500 SAN PEDRO AVENUE, SUITE 450
SAN ANTONIO, TEXAS 78216
TEL (210) 494-8004
FAX (210) 494-8286
T.B.P.E. FIRM # 1741

TALLEY ROAD

CROSS SECTIONS

SHEET 77 OF 88

PROJECT NUMBER:		SHEET NO.	
		625	
DESIGNED BY:	CP&Y	ROADWAY/HIGHWAY:	
CHECKED BY:	CP&Y	TALLEY ROAD	
DRAWN BY:	CP&Y	STATE	COUNTY
CHECKED BY:	CP&Y	TEXAS	BEXAR

2/23/2017 4:31:34 PM mberan
cpybw_ANSIB.tbl
cpypdf_ANSIB.pltcfg
pw:/Active Projects/BEXA14048.01/8.00 Plans and Drawings/8.10 Base Files/14048RDxsec_90.dgn

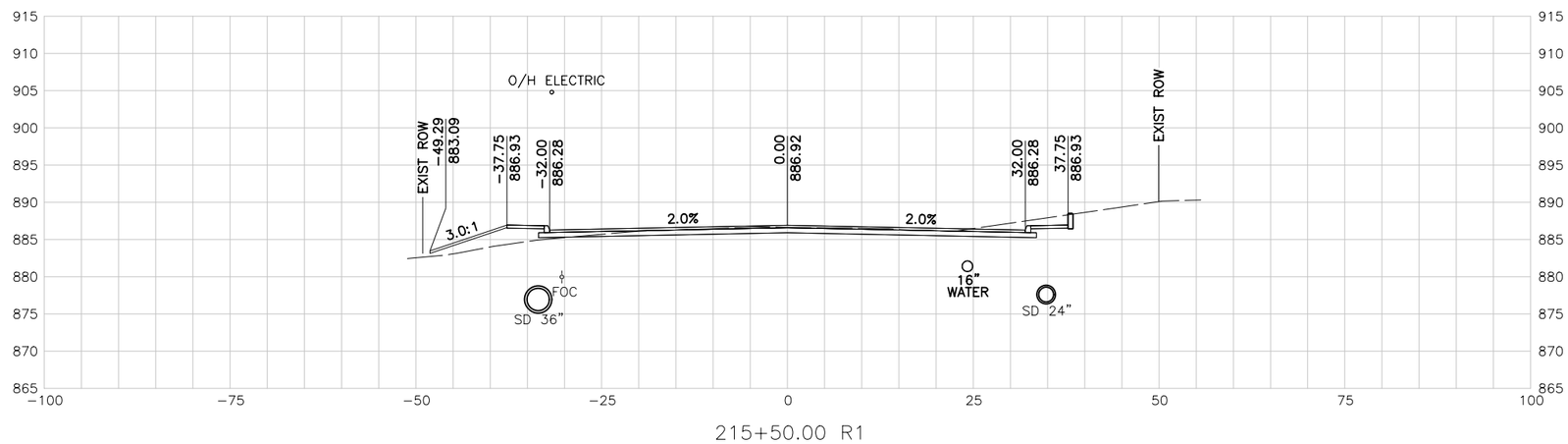

215+50.00 R1

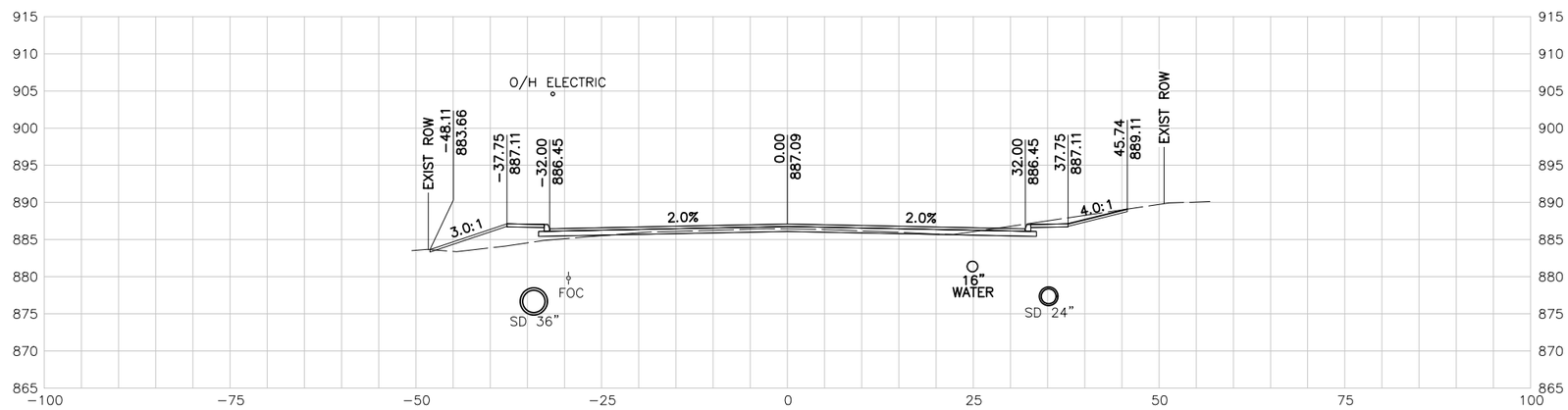

215+00.00 R1

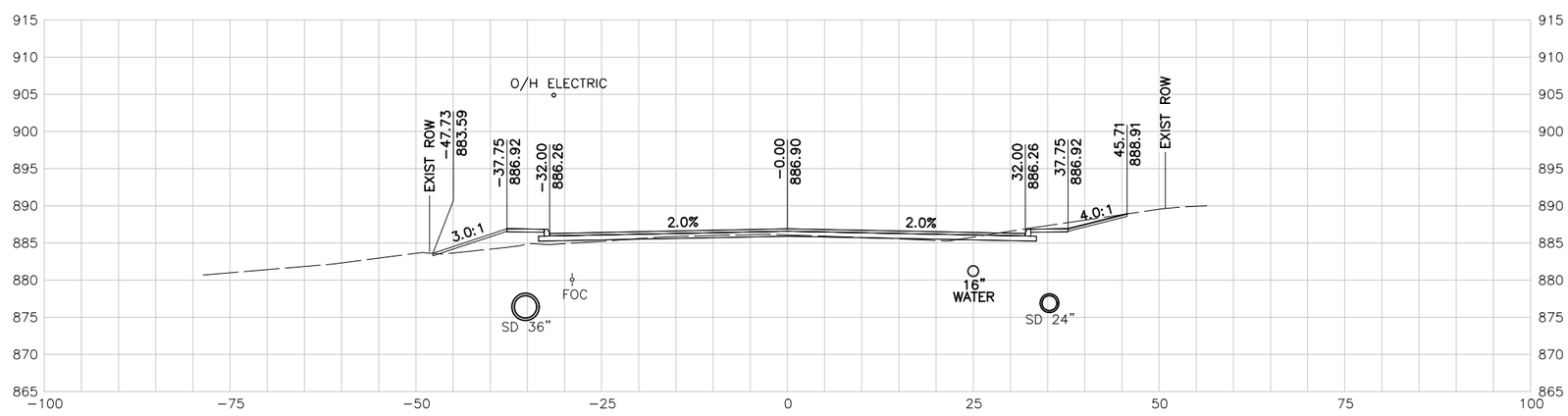

214+50.00 R1

10 5 0 10 20
SCALE FEET

NOTES:

1. UTILITY LOCATIONS ARE APPROXIMATE AND ARE SHOWN FROM THE BEST INFORMATION PROVIDED BY THE UTILITY COMPANIES AT THE TIME PLANS WERE PREPARED.
2. CONTRACTOR SHALL NOTIFY UTILITY COMPANIES AND LOCATE UTILITIES A MINIMUM OF 48 HOURS BEFORE BEGINNING WORK IN AREA.
3. CALL THE TEXAS STATE WIDE ONE CALL LOCATOR NUMBER 1-800-344-8377 48 HOURS BEFORE BEGINNING ANY EXCAVATION.

   DUE TO FEDERAL REGULATION TITLE 49, PART 192.181, CPS MUST MAINTAIN ACCESS TO GAS VALVES AT ALL TIMES. THE CONTRACTOR MUST PROTECT AND WORK AROUND ANY GAS VALVES THAT ARE IN THE PROJECT AREA.

   THE CONTRACTOR WILL BE RESPONSIBLE FOR PROTECTING ALL EXISTING UTILITIES ADJACENT TO THE WORK AREA.
4. SEE CROSS STREET PLAN AND PROFILE SHEETS AND INTERSECTION LAYOUT SHEETS FOR ADDITIONAL INFORMATION AT THE CROSS STREET.
5. SEE DRIVEWAY SUMMARY FOR ADDITIONAL INFORMATION PERTAINING TO DRIVEWAYS.

PRELIMINARY

90% SUBMITTAL
FOR INTERIM REVIEW ONLY
NOT FOR CONSTRUCTION, BIDDING, OR PERMIT PURPOSES.

CP&Y

ENGINEER JAIME AGUILAR
P.E. No. 87606 DATE 2/23/2017

BEXAR COUNTY
PUBLIC WORKS DEPARTMENT

NO	DATE	DESCRIPTION	DWG	CHK

REVISIONS

CP&Y
12500 SAN PEDRO AVENUE, SUITE 450
SAN ANTONIO, TEXAS 78216
TEL (210) 494-8004
FAX (210) 494-8286
T.B.P.E. FIRM # 1741

TALLEY ROAD

CROSS SECTIONS

SHEET 78 OF 88

PROJECT NUMBER:		SHEET NO.	
		626	
DESIGNED BY:	CP&Y	ROADWAY/HIGHWAY:	
CHECKED BY:	CP&Y	TALLEY ROAD	
DRAWN BY:	CP&Y	STATE	COUNTY
CHECKED BY:	CP&Y	TEXAS	BEXAR

cpybw_ANSIB.tbl
cpypd_ANSIB.pltcfg
pw:/Active Projects/BEXA14048.01/8.00 Plans and Drawings/8.10 Base Files/14048RDxsec_90.dgn
2/23/2017 4:31:35 PM mberan
pw:/Active Projects/BEXA14048.01/8.00 Plans and Drawings/8.10 Base Files/14048RDxsec_90.dgn

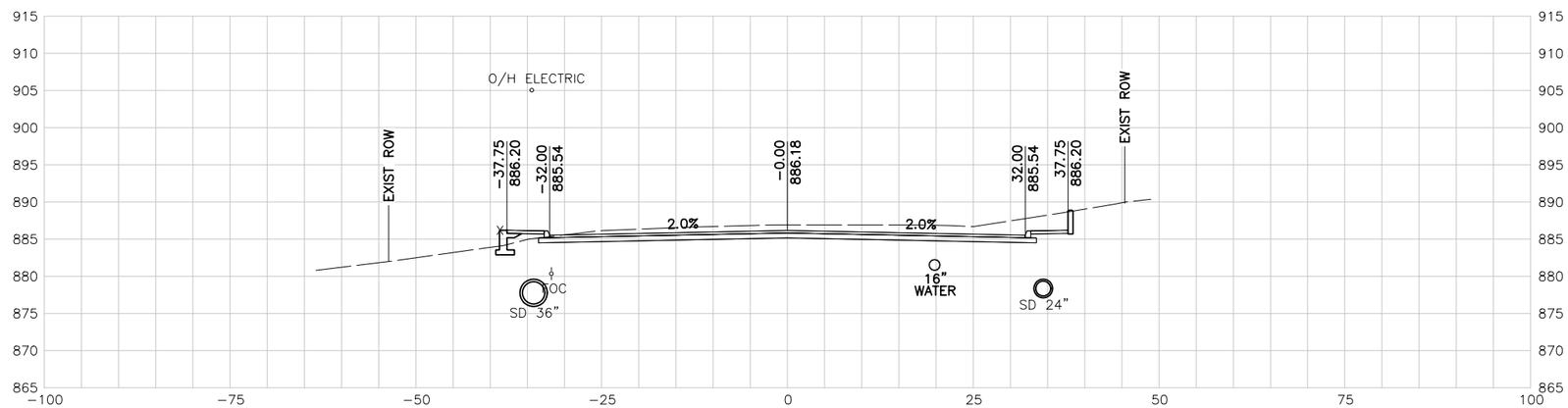

217+00.00 R1

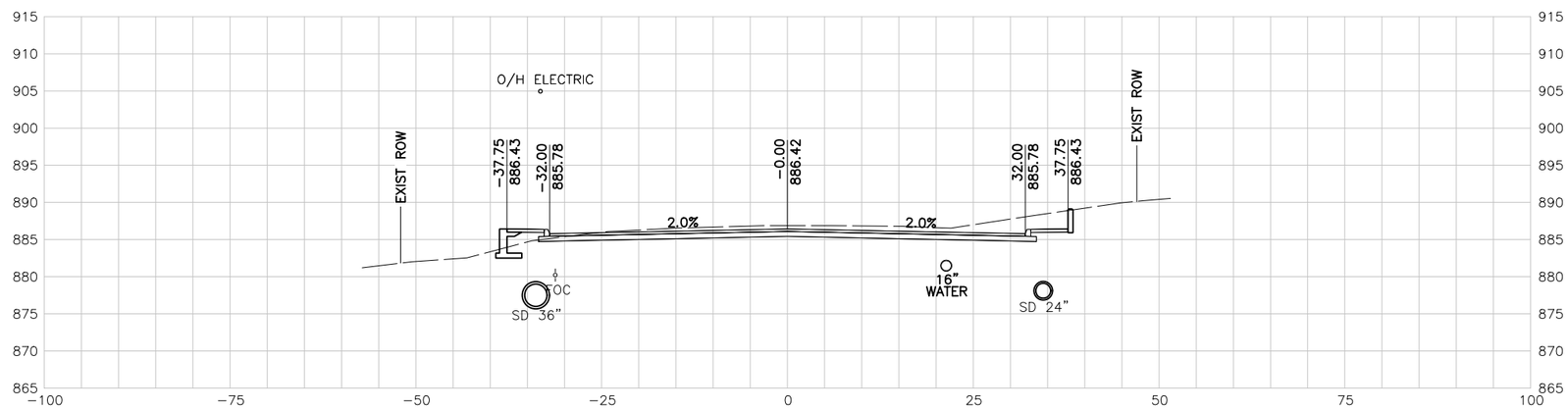

216+50.00 R1

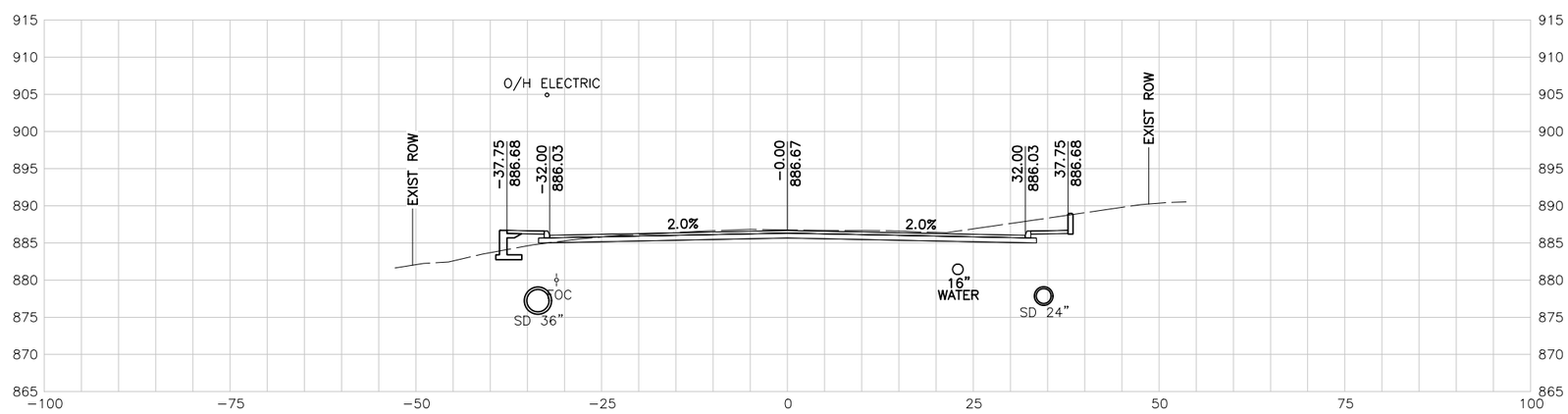

216+00.00 R1

10 5 0 10 20
SCALE FEET

NOTES:

1. UTILITY LOCATIONS ARE APPROXIMATE AND ARE SHOWN FROM THE BEST INFORMATION PROVIDED BY THE UTILITY COMPANIES AT THE TIME PLANS WERE PREPARED.
2. CONTRACTOR SHALL NOTIFY UTILITY COMPANIES AND LOCATE UTILITIES A MINIMUM OF 48 HOURS BEFORE BEGINNING WORK IN AREA.
3. CALL THE TEXAS STATE WIDE ONE CALL LOCATOR NUMBER 1-800-344-8377 48 HOURS BEFORE BEGINNING ANY EXCAVATION.

   DUE TO FEDERAL REGULATION TITLE 49, PART 192.181, CPS MUST MAINTAIN ACCESS TO GAS VALVES AT ALL TIMES. THE CONTRACTOR MUST PROTECT AND WORK AROUND ANY GAS VALVES THAT ARE IN THE PROJECT AREA.

   THE CONTRACTOR WILL BE RESPONSIBLE FOR PROTECTING ALL EXISTING UTILITIES ADJACENT TO THE WORK AREA.
4. SEE CROSS STREET PLAN AND PROFILE SHEETS AND INTERSECTION LAYOUT SHEETS FOR ADDITIONAL INFORMATION AT THE CROSS STREET.
5. SEE DRIVEWAY SUMMARY FOR ADDITIONAL INFORMATION PERTAINING TO DRIVEWAYS.

PRELIMINARY

90% SUBMITTAL
FOR INTERIM REVIEW ONLY
NOT FOR CONSTRUCTION, BIDDING, OR PERMIT PURPOSES.

CP&Y

ENGINEER JAIME AGUILAR
P.E. No. 87606 DATE 2/23/2017

BEXAR COUNTY
PUBLIC WORKS DEPARTMENT

NO	DATE	DESCRIPTION	DWG	CHK

REVISIONS

CP&Y
12500 SAN PEDRO AVENUE, SUITE 450
SAN ANTONIO, TEXAS 78216
TEL (210) 494-8004
FAX (210) 494-8286
T.B.P.E. FIRM # 1741

TALLEY ROAD

CROSS SECTIONS

SHEET 79 OF 88

PROJECT NUMBER:		SHEET NO.	
		627	
DESIGNED BY:	CP&Y	ROADWAY/HIGHWAY:	
CHECKED BY:	CP&Y	TALLEY ROAD	
DRAWN BY:	CP&Y	STATE	COUNTY
CHECKED BY:	CP&Y	TEXAS	BEXAR

cpybw_ANSIB.tbl
cpycf_ANSIB.pltcfg
pw:/Active Projects/BEXA14048.01/8.00 Plans and Drawings/8.10 Base Files/14048RDxsec_90.dgn
2/23/2017 4:31:35 PM mberan
pw:/Active Projects/BEXA14048.01/8.00 Plans and Drawings/8.10 Base Files/14048RDxsec_90.dgn

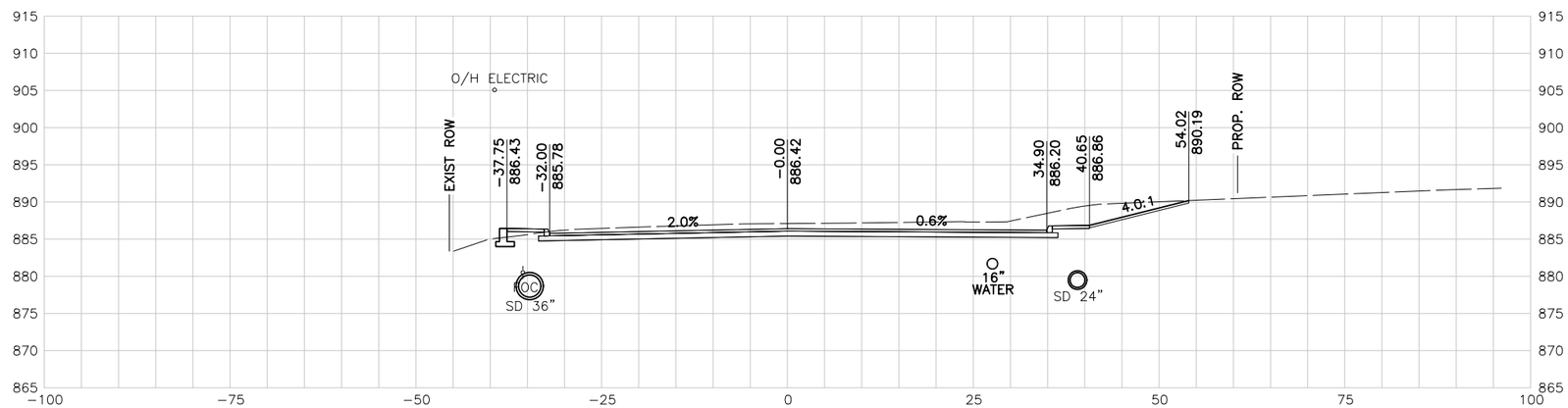

218+50.00 R1

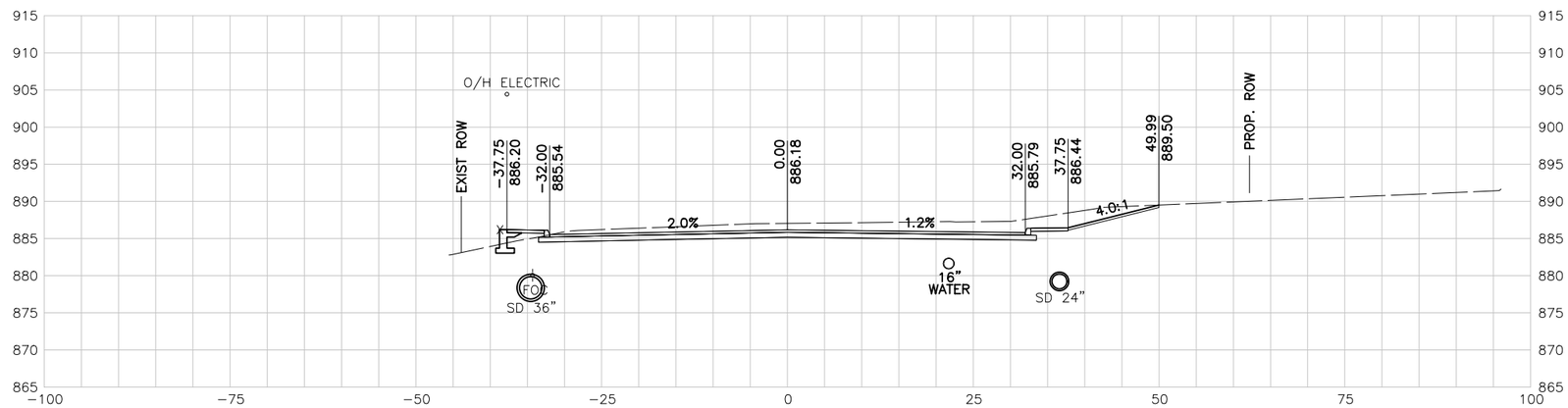

218+00.00 R1

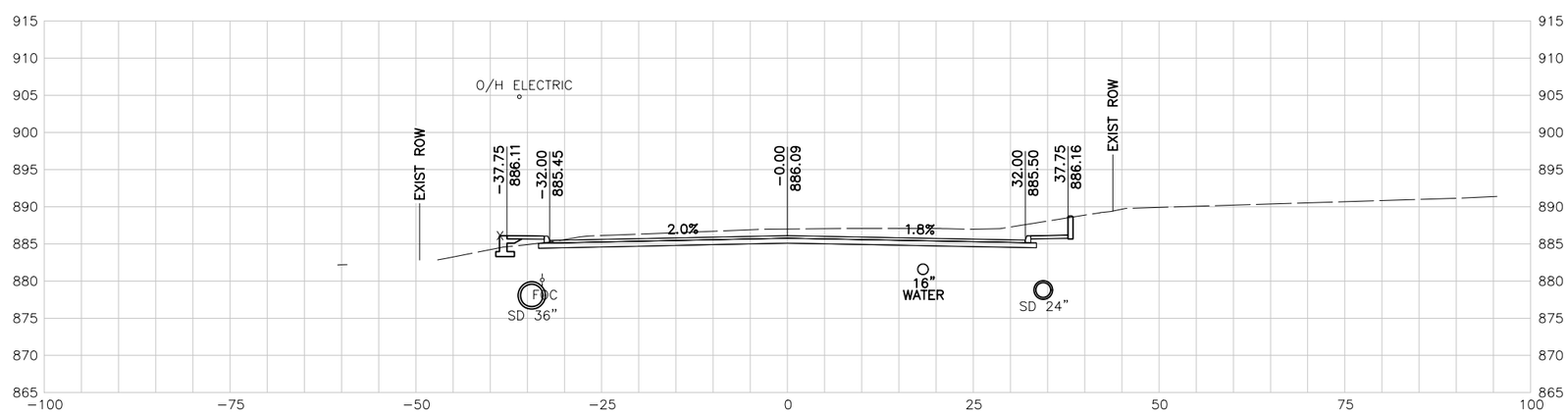

217+50.00 R1

10 5 0 10 20
SCALE FEET

NOTES:

1. UTILITY LOCATIONS ARE APPROXIMATE AND ARE SHOWN FROM THE BEST INFORMATION PROVIDED BY THE UTILITY COMPANIES AT THE TIME PLANS WERE PREPARED.
2. CONTRACTOR SHALL NOTIFY UTILITY COMPANIES AND LOCATE UTILITIES A MINIMUM OF 48 HOURS BEFORE BEGINNING WORK IN AREA.
3. CALL THE TEXAS STATE WIDE ONE CALL LOCATOR NUMBER 1-800-344-8377 48 HOURS BEFORE BEGINNING ANY EXCAVATION.

   DUE TO FEDERAL REGULATION TITLE 49, PART 192.181, CPS MUST MAINTAIN ACCESS TO GAS VALVES AT ALL TIMES. THE CONTRACTOR MUST PROTECT AND WORK AROUND ANY GAS VALVES THAT ARE IN THE PROJECT AREA.

   THE CONTRACTOR WILL BE RESPONSIBLE FOR PROTECTING ALL EXISTING UTILITIES ADJACENT TO THE WORK AREA.
4. SEE CROSS STREET PLAN AND PROFILE SHEETS AND INTERSECTION LAYOUT SHEETS FOR ADDITIONAL INFORMATION AT THE CROSS STREET.
5. SEE DRIVEWAY SUMMARY FOR ADDITIONAL INFORMATION PERTAINING TO DRIVEWAYS.

PRELIMINARY

90% SUBMITTAL
FOR INTERIM REVIEW ONLY
NOT FOR CONSTRUCTION, BIDDING, OR PERMIT PURPOSES.

CP&Y

ENGINEER JAIME AGUILAR
P.E. No. 87606 DATE 2/23/2017

BEXAR COUNTY
PUBLIC WORKS DEPARTMENT

NO	DATE	DESCRIPTION	DWG	CHK

REVISIONS

CP&Y
12500 SAN PEDRO AVENUE, SUITE 450
SAN ANTONIO, TEXAS 78216
TEL (210) 494-8004
FAX (210) 494-8286
T.B.P.E. FIRM # 1741

TALLEY ROAD

CROSS SECTIONS

SHEET 80 OF 88

PROJECT NUMBER:		SHEET NO.	
		628	
DESIGNED BY:	CP&Y	ROADWAY/HIGHWAY:	
CHECKED BY:	CP&Y	TALLEY ROAD	
DRAWN BY:	CP&Y	STATE	COUNTY
CHECKED BY:	CP&Y	TEXAS	BEXAR

cpybw_ANSIB.tbl
cpypdf_ANSIB.pltcfg
pw:/Active Projects/BEXA14048.01/8.00 Plans and Drawings/8.10 Base Files/14048RDxsec_90.dgn
2/23/2017 4:31:36 PM mberon
pw:/Active Projects/BEXA14048.01/8.00 Plans and Drawings/8.10 Base Files/14048RDxsec_90.dgn

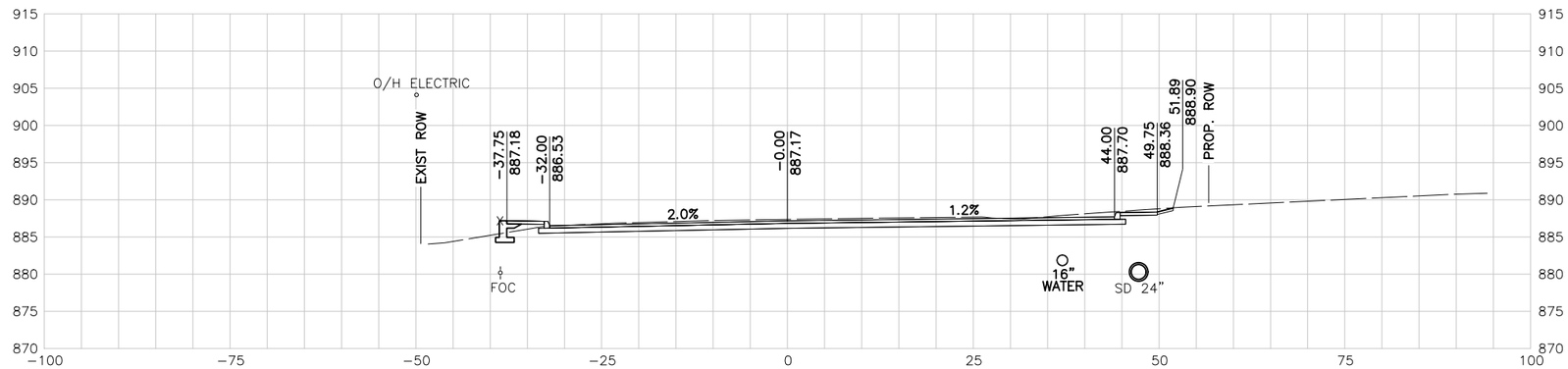

220+00.00 R1

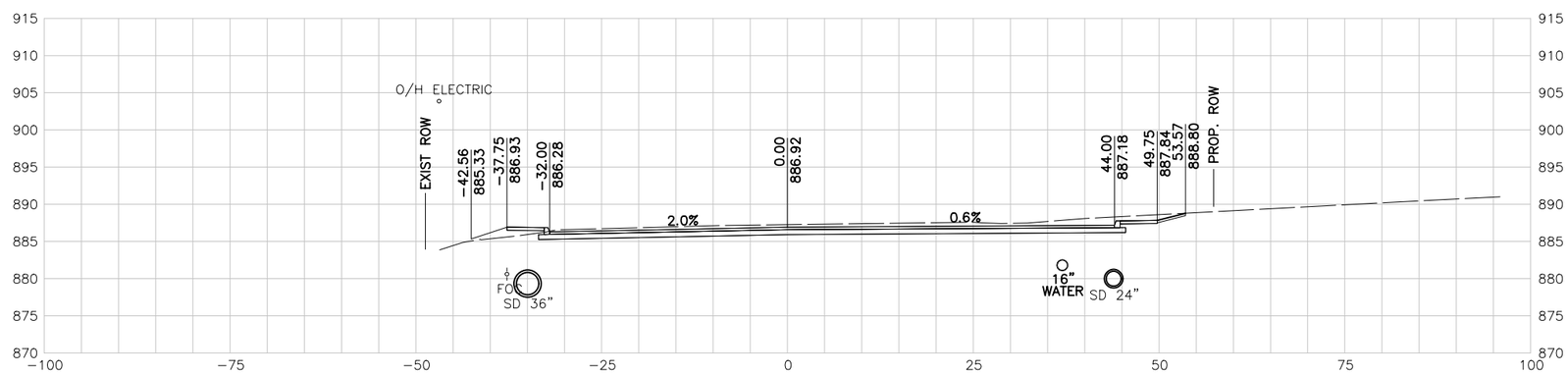

219+50.00 R1

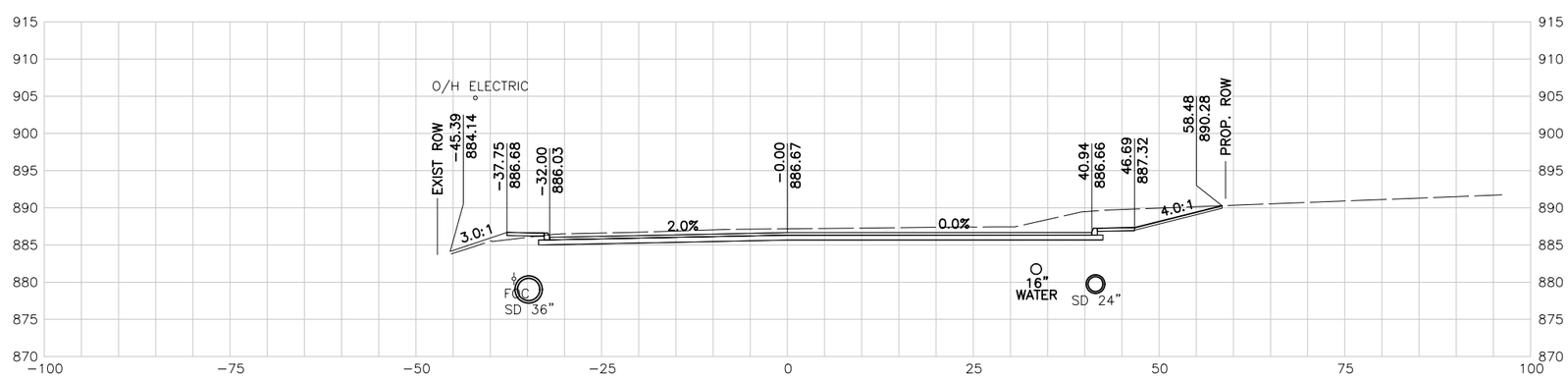

219+00.00 R1

10 5 0 10 20
SCALE FEET

NOTES:

1. UTILITY LOCATIONS ARE APPROXIMATE AND ARE SHOWN FROM THE BEST INFORMATION PROVIDED BY THE UTILITY COMPANIES AT THE TIME PLANS WERE PREPARED.
2. CONTRACTOR SHALL NOTIFY UTILITY COMPANIES AND LOCATE UTILITIES A MINIMUM OF 48 HOURS BEFORE BEGINNING WORK IN AREA.
3. CALL THE TEXAS STATE WIDE ONE CALL LOCATOR NUMBER 1-800-344-8377 48 HOURS BEFORE BEGINNING ANY EXCAVATION.

   DUE TO FEDERAL REGULATION TITLE 49, PART 192.181, CPS MUST MAINTAIN ACCESS TO GAS VALVES AT ALL TIMES. THE CONTRACTOR MUST PROTECT AND WORK AROUND ANY GAS VALVES THAT ARE IN THE PROJECT AREA.

   THE CONTRACTOR WILL BE RESPONSIBLE FOR PROTECTING ALL EXISTING UTILITIES ADJACENT TO THE WORK AREA.
4. SEE CROSS STREET PLAN AND PROFILE SHEETS AND INTERSECTION LAYOUT SHEETS FOR ADDITIONAL INFORMATION AT THE CROSS STREET.
5. SEE DRIVEWAY SUMMARY FOR ADDITIONAL INFORMATION PERTAINING TO DRIVEWAYS.

PRELIMINARY

90% SUBMITTAL
FOR INTERIM REVIEW ONLY
NOT FOR CONSTRUCTION, BIDDING, OR PERMIT PURPOSES.

CP&Y

ENGINEER JAIME AGUILAR
P.E. No. 87606 DATE 2/23/2017

BEXAR COUNTY
PUBLIC WORKS DEPARTMENT

NO	DATE	DESCRIPTION	DWG	CHK

REVISIONS

CP&Y
12500 SAN PEDRO AVENUE, SUITE 450
SAN ANTONIO, TEXAS 78216
TEL (210) 494-8004
FAX (210) 494-8286
T.B.P.E. FIRM # 1741

TALLEY ROAD

CROSS SECTIONS

SHEET 81 OF 88

PROJECT NUMBER:		SHEET NO.
		629
DESIGNED BY: CP&Y	ROADWAY/HIGHWAY:	
CHECKED BY: CP&Y	TALLEY ROAD	
DRAWN BY: CP&Y	STATE	COUNTY
CHECKED BY: CP&Y	TEXAS	BEXAR

2/23/2017 4:31:36 PM mberon cpybw_ANSIB.tbl cpypdf_ANSIB.pltcfg pw:/Active Projects/BEXA14048.01/8.00 Plans and Drawings/8.10 Base Files/14048RDxsec_90.dgn
pw:/Active Projects/BEXA14048.01/8.00 Plans and Drawings/8.10 Base Files/14048RDxsec_90.dgn

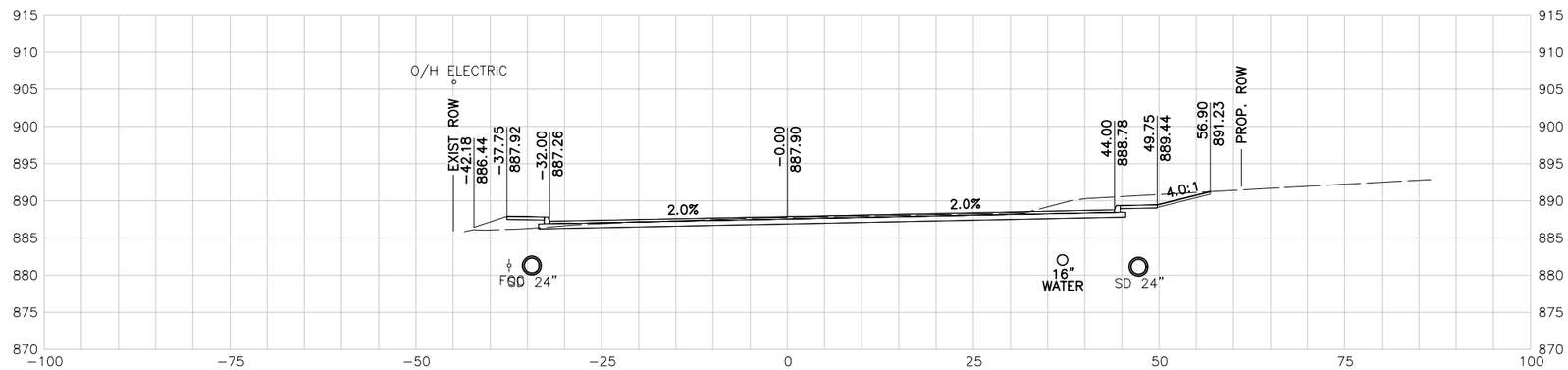

221+50.00 R1

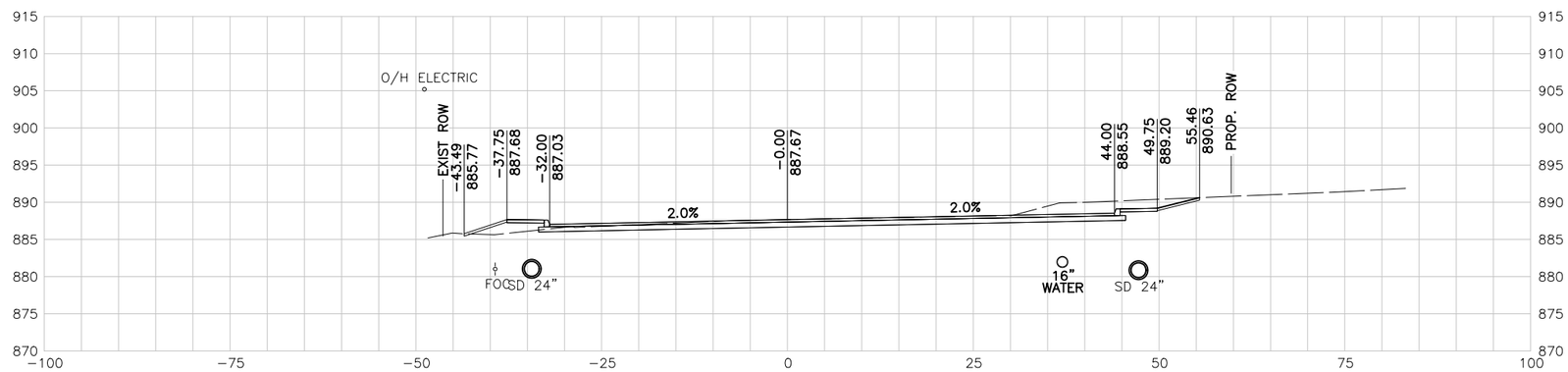

221+00.00 R1

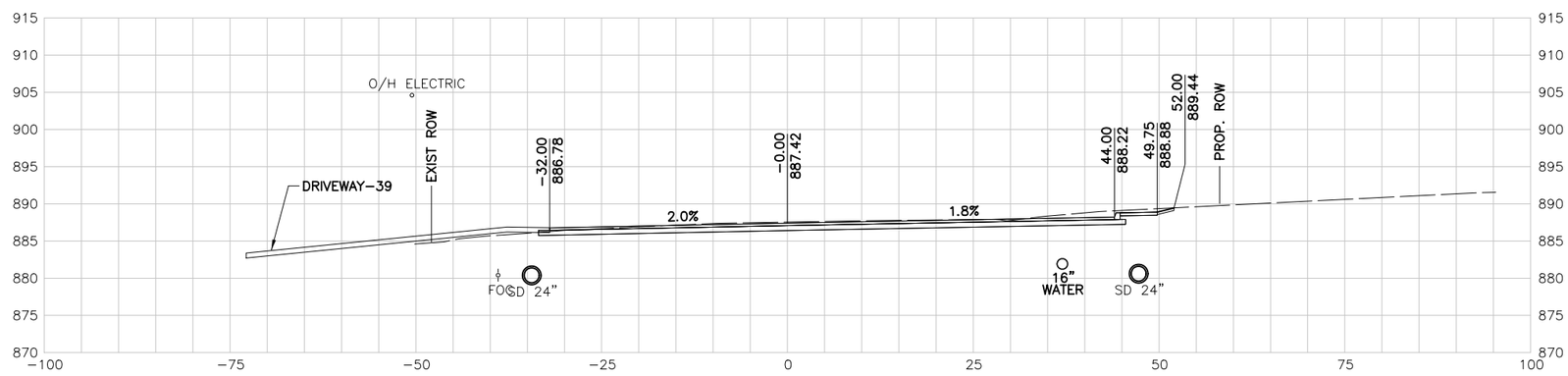

220+50.00 R1

10 5 0 10 20
SCALE FEET

NOTES:

1. UTILITY LOCATIONS ARE APPROXIMATE AND ARE SHOWN FROM THE BEST INFORMATION PROVIDED BY THE UTILITY COMPANIES AT THE TIME PLANS WERE PREPARED.
2. CONTRACTOR SHALL NOTIFY UTILITY COMPANIES AND LOCATE UTILITIES A MINIMUM OF 48 HOURS BEFORE BEGINNING WORK IN AREA.
3. CALL THE TEXAS STATE WIDE ONE CALL LOCATOR NUMBER 1-800-344-8377 48 HOURS BEFORE BEGINNING ANY EXCAVATION.

   DUE TO FEDERAL REGULATION TITLE 49, PART 192.181, CPS MUST MAINTAIN ACCESS TO GAS VALVES AT ALL TIMES. THE CONTRACTOR MUST PROTECT AND WORK AROUND ANY GAS VALVES THAT ARE IN THE PROJECT AREA.

   THE CONTRACTOR WILL BE RESPONSIBLE FOR PROTECTING ALL EXISTING UTILITIES ADJACENT TO THE WORK AREA.
4. SEE CROSS STREET PLAN AND PROFILE SHEETS AND INTERSECTION LAYOUT SHEETS FOR ADDITIONAL INFORMATION AT THE CROSS STREET.
5. SEE DRIVEWAY SUMMARY FOR ADDITIONAL INFORMATION PERTAINING TO DRIVEWAYS.

PRELIMINARY

90% SUBMITTAL
FOR INTERIM REVIEW ONLY
NOT FOR CONSTRUCTION, BIDDING, OR PERMIT PURPOSES.

CP&Y

ENGINEER JAIME AGUILAR
P.E. No. 87606 DATE 2/23/2017

BEXAR COUNTY
PUBLIC WORKS DEPARTMENT

NO	DATE	DESCRIPTION	DWG	CHK

REVISIONS

CP&Y
12500 SAN PEDRO AVENUE, SUITE 450
SAN ANTONIO, TEXAS 78216
TEL (210) 494-8004
FAX (210) 494-8286
T.B.P.E. FIRM # 1741

TALLEY ROAD

CROSS SECTIONS

SHEET 82 OF 88

PROJECT NUMBER:		SHEET NO.	
		630	
DESIGNED BY:	CP&Y	ROADWAY/HIGHWAY:	
CHECKED BY:	CP&Y	TALLEY ROAD	
DRAWN BY:	CP&Y	STATE	COUNTY
CHECKED BY:	CP&Y	TEXAS	BEXAR

cpybw_ANSIB.tbl
cpypdf_ANSIB.pltcfg
pw:/Active Projects/BEXA14048.01/8.00 Plans and Drawings/8.10 Base Files/14048RDxsec_90.dgn
2/23/2017 4:31:37 PM mberon
pw:/Active Projects/BEXA14048.01/8.00 Plans and Drawings/8.10 Base Files/14048RDxsec_90.dgn

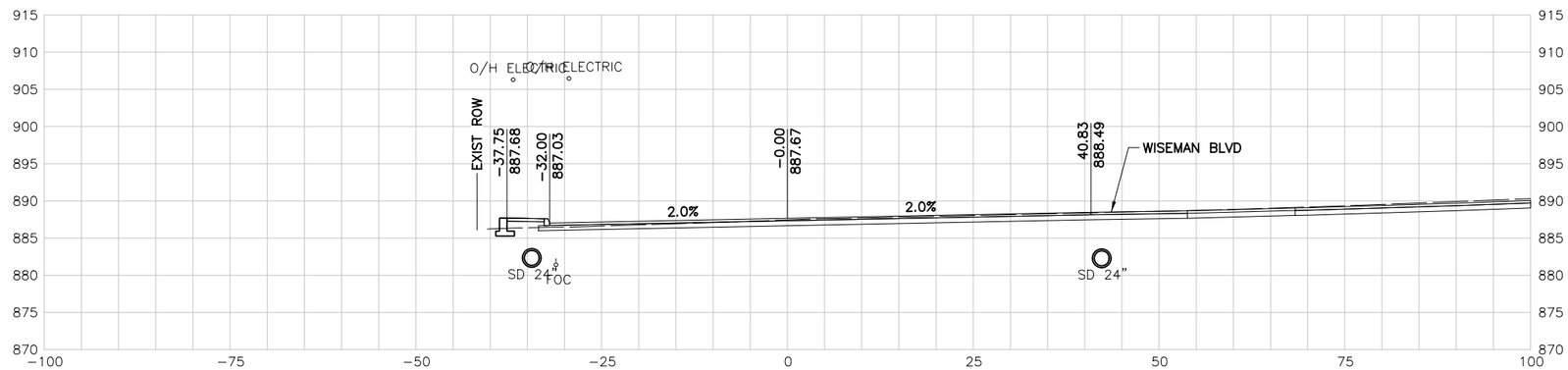

223+00.00 R1

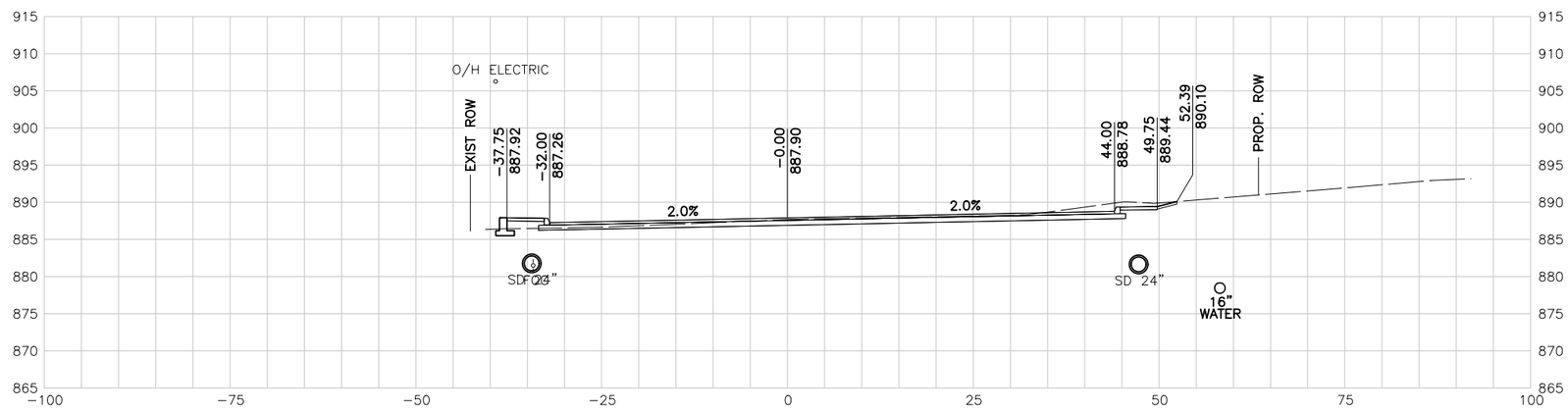

222+50.00 R1

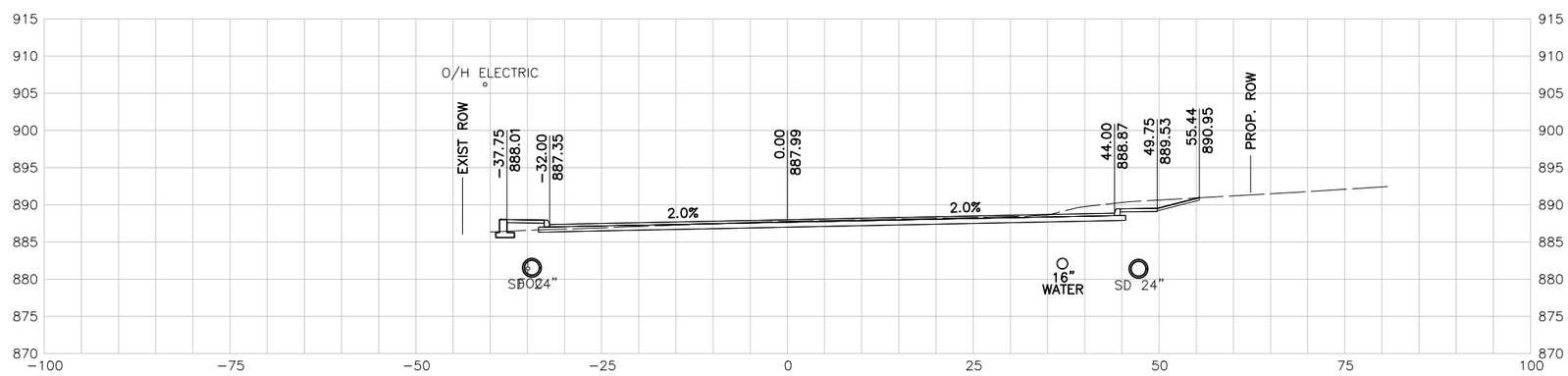

222+00.00 R1

10 5 0 10 20
SCALE FEET

NOTES:

1. UTILITY LOCATIONS ARE APPROXIMATE AND ARE SHOWN FROM THE BEST INFORMATION PROVIDED BY THE UTILITY COMPANIES AT THE TIME PLANS WERE PREPARED.
2. CONTRACTOR SHALL NOTIFY UTILITY COMPANIES AND LOCATE UTILITIES A MINIMUM OF 48 HOURS BEFORE BEGINNING WORK IN AREA.
3. CALL THE TEXAS STATE WIDE ONE CALL LOCATOR NUMBER 1-800-344-8377 48 HOURS BEFORE BEGINNING ANY EXCAVATION.

   DUE TO FEDERAL REGULATION TITLE 49, PART 192.181, CPS MUST MAINTAIN ACCESS TO GAS VALVES AT ALL TIMES. THE CONTRACTOR MUST PROTECT AND WORK AROUND ANY GAS VALVES THAT ARE IN THE PROJECT AREA.

   THE CONTRACTOR WILL BE RESPONSIBLE FOR PROTECTING ALL EXISTING UTILITIES ADJACENT TO THE WORK AREA.
4. SEE CROSS STREET PLAN AND PROFILE SHEETS AND INTERSECTION LAYOUT SHEETS FOR ADDITIONAL INFORMATION AT THE CROSS STREET.
5. SEE DRIVEWAY SUMMARY FOR ADDITIONAL INFORMATION PERTAINING TO DRIVEWAYS.

PRELIMINARY

90% SUBMITTAL
FOR INTERIM REVIEW ONLY
NOT FOR CONSTRUCTION, BIDDING, OR PERMIT PURPOSES.

CP&Y

ENGINEER JAIME AGUILAR
P.E. No. 87606 DATE 2/23/2017

BEXAR COUNTY
PUBLIC WORKS DEPARTMENT

NO	DATE	DESCRIPTION	DWG	CHK

REVISIONS

CP&Y
12500 SAN PEDRO AVENUE, SUITE 450
SAN ANTONIO, TEXAS 78216
TEL (210) 494-8004
FAX (210) 494-8286
T.B.P.E. FIRM # 1741

TALLEY ROAD

CROSS SECTIONS

SHEET 83 OF 88

PROJECT NUMBER:		SHEET NO.	
		631	
DESIGNED BY:	CP&Y	ROADWAY/HIGHWAY:	
CHECKED BY:	CP&Y	TALLEY ROAD	
DRAWN BY:	CP&Y	STATE	COUNTY
CHECKED BY:	CP&Y	TEXAS	BEXAR

cpybw_ANSIB.tbl
cpypdf_ANSIB.pltcfg
pw:/Active Projects/BEXA14048.01/8.00 Plans and Drawings/8.10 Base Files/14048RDxsec_90.dgn
2/23/2017 4:31:37 PM mberon
pw:/Active Projects/BEXA14048.01/8.00 Plans and Drawings/8.10 Base Files/14048RDxsec_90.dgn

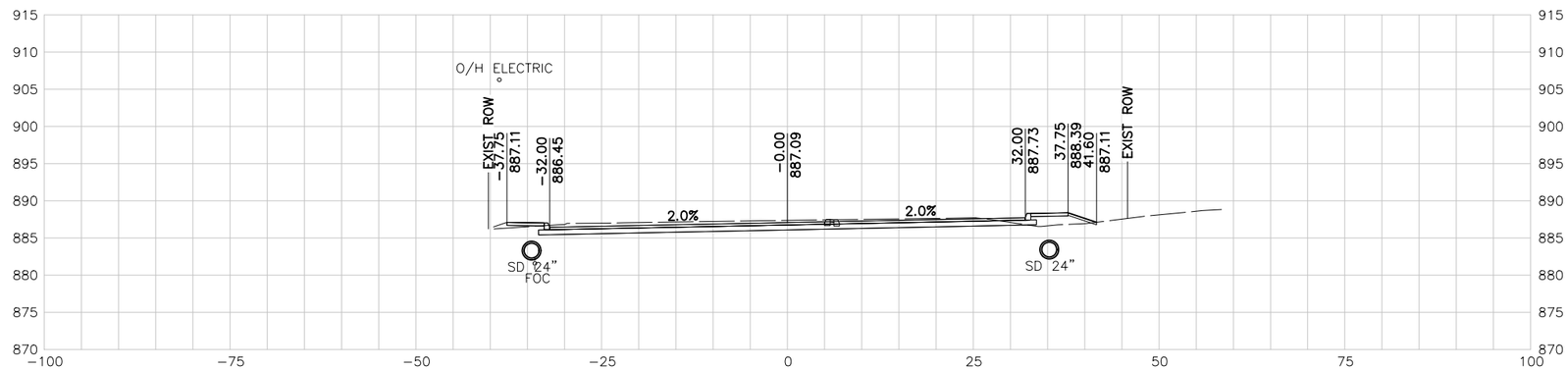

224+50.00 R1

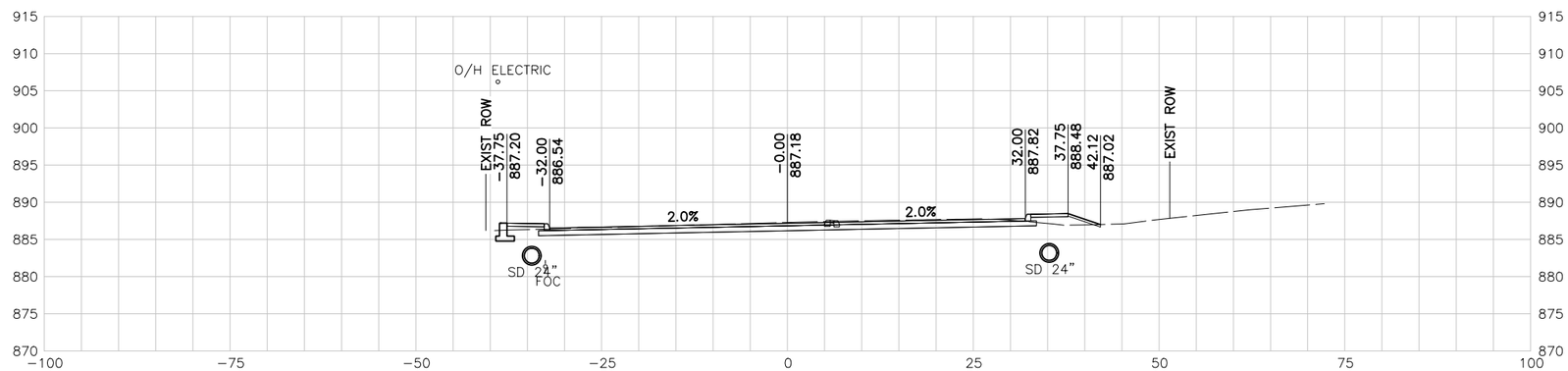

224+00.00 R1

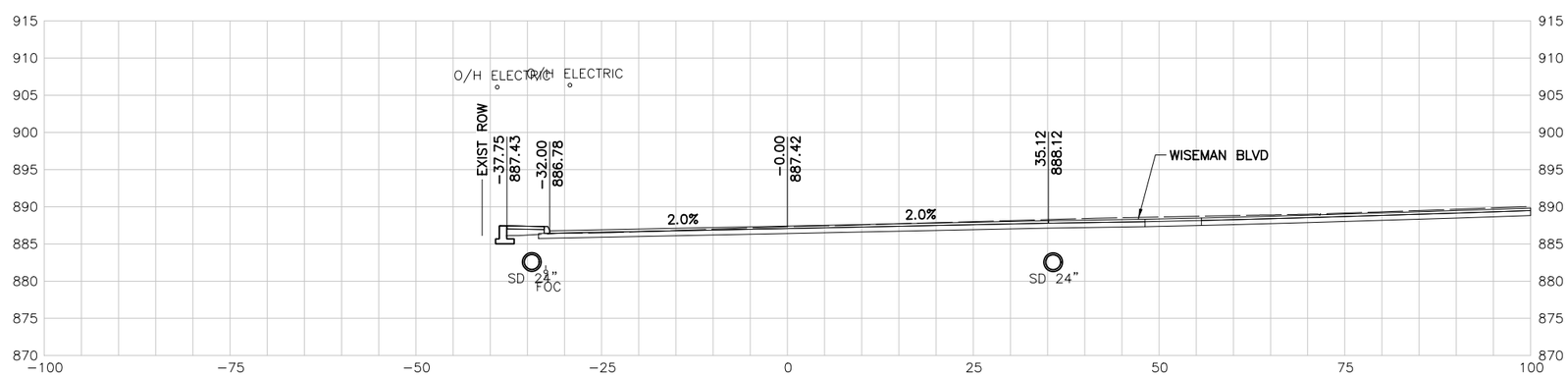

223+50.00 R1

10 5 0 10 20
SCALE FEET

NOTES:

1. UTILITY LOCATIONS ARE APPROXIMATE AND ARE SHOWN FROM THE BEST INFORMATION PROVIDED BY THE UTILITY COMPANIES AT THE TIME PLANS WERE PREPARED.
2. CONTRACTOR SHALL NOTIFY UTILITY COMPANIES AND LOCATE UTILITIES A MINIMUM OF 48 HOURS BEFORE BEGINNING WORK IN AREA.
3. CALL THE TEXAS STATE WIDE ONE CALL LOCATOR NUMBER 1-800-344-8377 48 HOURS BEFORE BEGINNING ANY EXCAVATION.

   DUE TO FEDERAL REGULATION TITLE 49, PART 192.181, CPS MUST MAINTAIN ACCESS TO GAS VALVES AT ALL TIMES. THE CONTRACTOR MUST PROTECT AND WORK AROUND ANY GAS VALVES THAT ARE IN THE PROJECT AREA.

   THE CONTRACTOR WILL BE RESPONSIBLE FOR PROTECTING ALL EXISTING UTILITIES ADJACENT TO THE WORK AREA.
4. SEE CROSS STREET PLAN AND PROFILE SHEETS AND INTERSECTION LAYOUT SHEETS FOR ADDITIONAL INFORMATION AT THE CROSS STREET.
5. SEE DRIVEWAY SUMMARY FOR ADDITIONAL INFORMATION PERTAINING TO DRIVEWAYS.

PRELIMINARY

90% SUBMITTAL
FOR INTERIM REVIEW ONLY
NOT FOR CONSTRUCTION, BIDDING, OR PERMIT PURPOSES.

CP&Y

ENGINEER JAIME AGUILAR
P.E. No. 87606 DATE 2/23/2017

BEXAR COUNTY
PUBLIC WORKS DEPARTMENT

NO	DATE	DESCRIPTION	DWG	CHK

REVISIONS

CP&Y
12500 SAN PEDRO AVENUE, SUITE 450
SAN ANTONIO, TEXAS 78216
TEL (210) 494-8004
FAX (210) 494-8286
T.B.P.E. FIRM # 1741

TALLEY ROAD

CROSS SECTIONS

SHEET 84 OF 88

PROJECT NUMBER:		SHEET NO.	
		632	
DESIGNED BY:	CP&Y	ROADWAY/HIGHWAY:	
CHECKED BY:	CP&Y	TALLEY ROAD	
DRAWN BY:	CP&Y	STATE	COUNTY
CHECKED BY:	CP&Y	TEXAS	BEXAR

cpybw_ANSIB.tbl
cpypt_ANSIB.pltcfg
pw:/Active Projects/BEXA14048.01/8.00 Plans and Drawings/8.10 Base Files/14048RDxsec_90.dgn
2/23/2017 4:31:38 PM mberon
pw:/Active Projects/BEXA14048.01/8.00 Plans and Drawings/8.10 Base Files/14048RDxsec_90.dgn

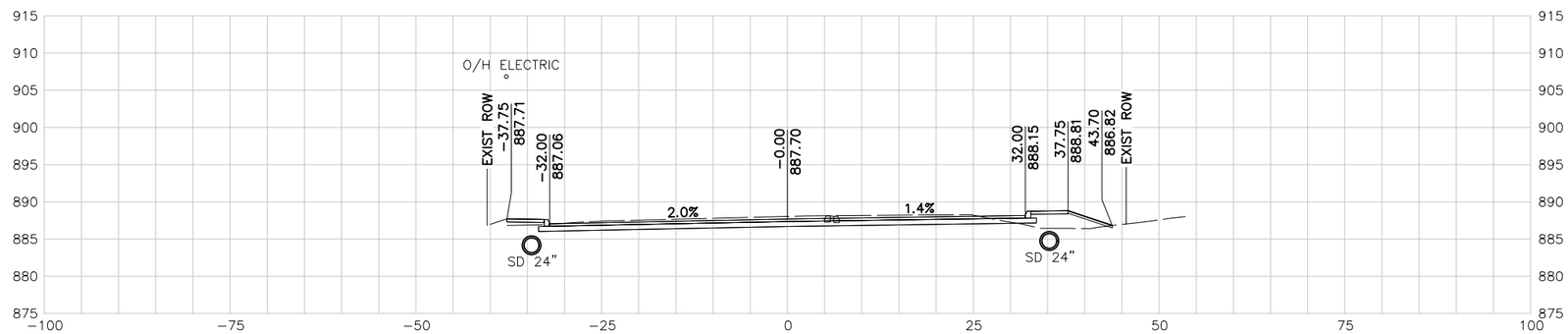

226+00.00 R1

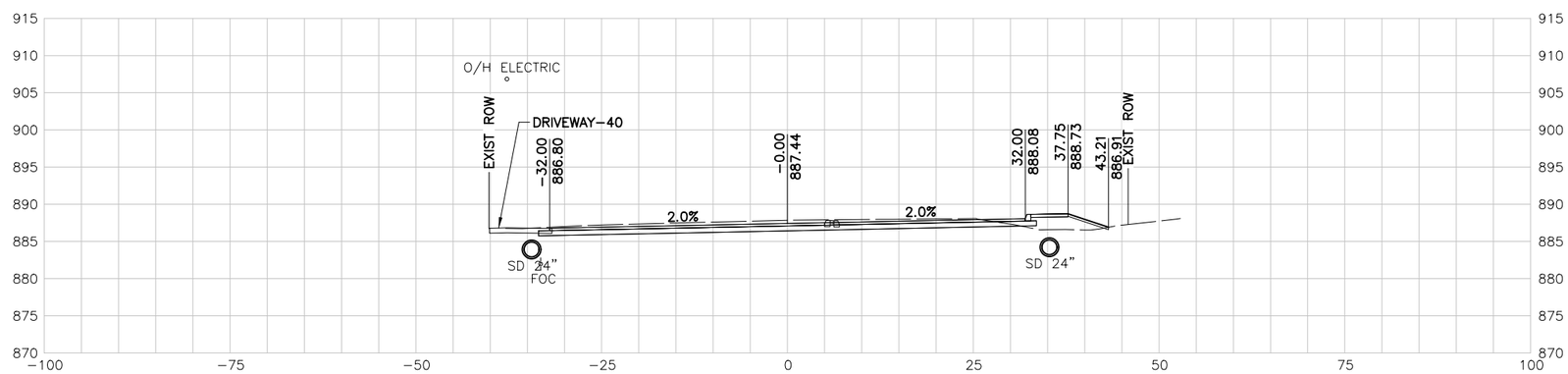

225+50.00 R1

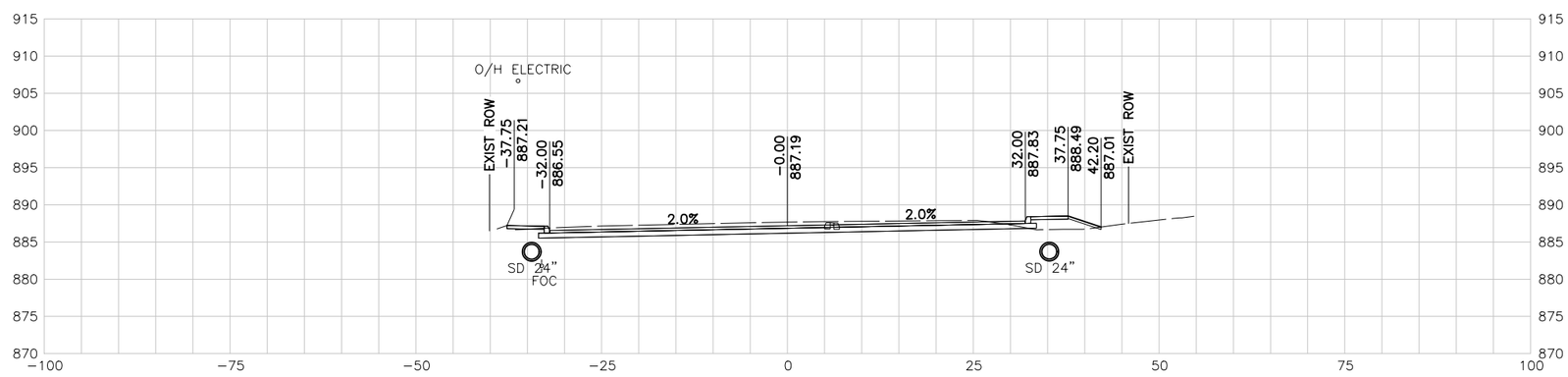

225+00.00 R1

10 5 0 10 20
SCALE FEET

NOTES:

1. UTILITY LOCATIONS ARE APPROXIMATE AND ARE SHOWN FROM THE BEST INFORMATION PROVIDED BY THE UTILITY COMPANIES AT THE TIME PLANS WERE PREPARED.
2. CONTRACTOR SHALL NOTIFY UTILITY COMPANIES AND LOCATE UTILITIES A MINIMUM OF 48 HOURS BEFORE BEGINNING WORK IN AREA.
3. CALL THE TEXAS STATE WIDE ONE CALL LOCATOR NUMBER 1-800-344-8377 48 HOURS BEFORE BEGINNING ANY EXCAVATION.

   DUE TO FEDERAL REGULATION TITLE 49, PART 192.181, CPS MUST MAINTAIN ACCESS TO GAS VALVES AT ALL TIMES. THE CONTRACTOR MUST PROTECT AND WORK AROUND ANY GAS VALVES THAT ARE IN THE PROJECT AREA.

   THE CONTRACTOR WILL BE RESPONSIBLE FOR PROTECTING ALL EXISTING UTILITIES ADJACENT TO THE WORK AREA.
4. SEE CROSS STREET PLAN AND PROFILE SHEETS AND INTERSECTION LAYOUT SHEETS FOR ADDITIONAL INFORMATION AT THE CROSS STREET.
5. SEE DRIVEWAY SUMMARY FOR ADDITIONAL INFORMATION PERTAINING TO DRIVEWAYS.

PRELIMINARY

90% SUBMITTAL
FOR INTERIM REVIEW ONLY
NOT FOR CONSTRUCTION, BIDDING, OR PERMIT PURPOSES.

CP&Y

ENGINEER JAIME AGUILAR
P.E. No. 87606 DATE 2/23/2017

BEXAR COUNTY
PUBLIC WORKS DEPARTMENT

NO	DATE	DESCRIPTION	DWG	CHK

REVISIONS

CP&Y
12500 SAN PEDRO AVENUE, SUITE 450
SAN ANTONIO, TEXAS 78216
TEL (210) 494-8004
FAX (210) 494-8286
T.B.P.E. FIRM # 1741

TALLEY ROAD

CROSS SECTIONS

SHEET 85 OF 88

PROJECT NUMBER:		SHEET NO.	
		633	
DESIGNED BY:	CP&Y	ROADWAY/HIGHWAY:	
CHECKED BY:	CP&Y	TALLEY ROAD	
DRAWN BY:	CP&Y	STATE	COUNTY
CHECKED BY:	CP&Y	TEXAS	BEXAR

cpybw_ANSIB.tbl
cpypdf_ANSIB.pltcfg
pw:/Active Projects/BEXA14048.01/8.00 Plans and Drawings/8.10 Base Files/14048RDxsec_90.dgn
2/23/2017 4:31:39 PM mberon
pw:/Active Projects/BEXA14048.01/8.00 Plans and Drawings/8.10 Base Files/14048RDxsec_90.dgn

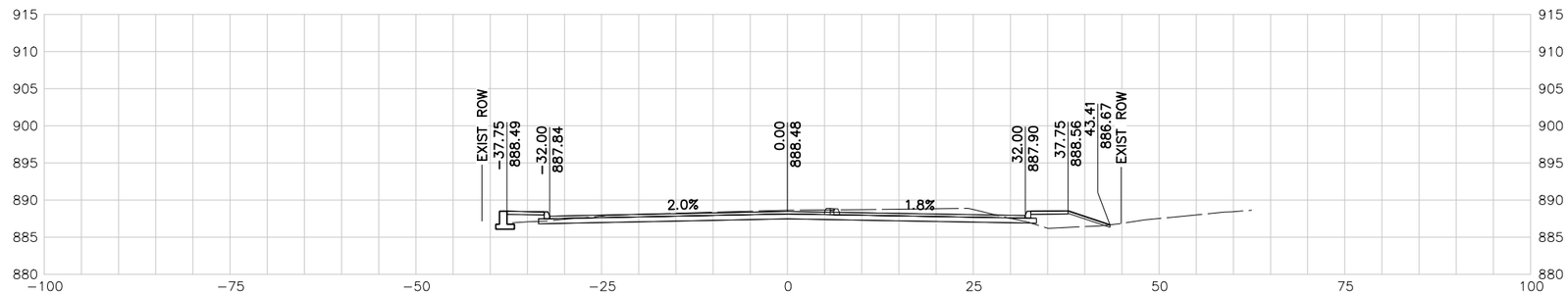

227+50.00 R1

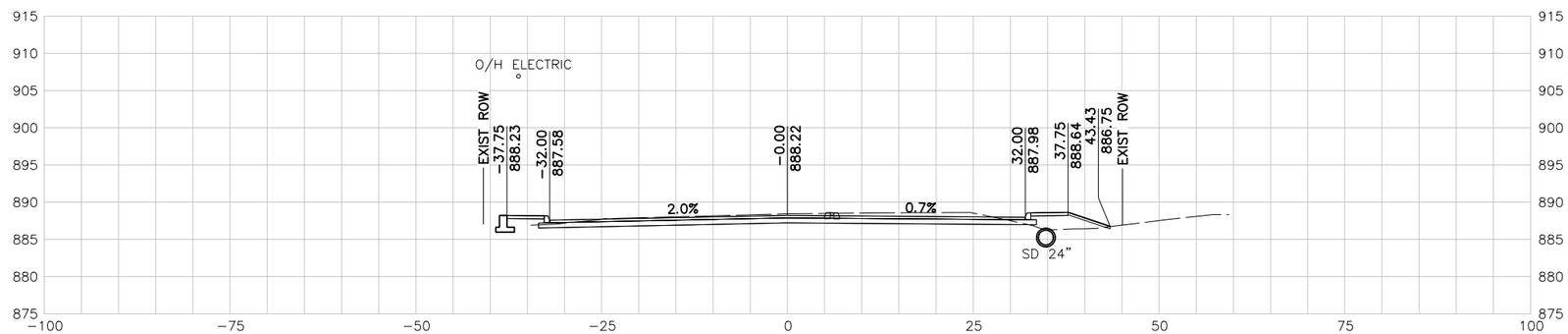

227+00.00 R1

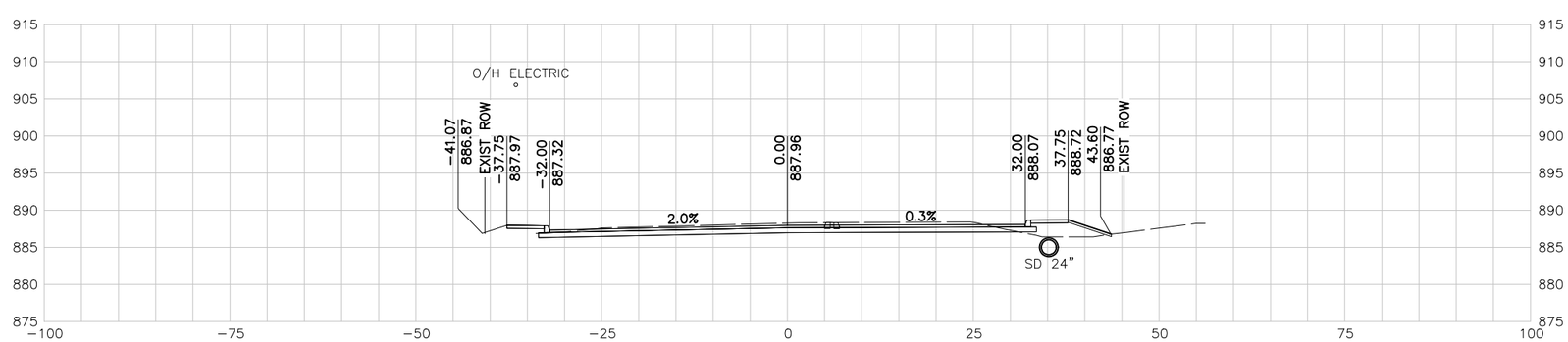

226+50.00 R1

10 5 0 10 20
SCALE FEET

NOTES:

1. UTILITY LOCATIONS ARE APPROXIMATE AND ARE SHOWN FROM THE BEST INFORMATION PROVIDED BY THE UTILITY COMPANIES AT THE TIME PLANS WERE PREPARED.
2. CONTRACTOR SHALL NOTIFY UTILITY COMPANIES AND LOCATE UTILITIES A MINIMUM OF 48 HOURS BEFORE BEGINNING WORK IN AREA.
3. CALL THE TEXAS STATE WIDE ONE CALL LOCATOR NUMBER 1-800-344-8377 48 HOURS BEFORE BEGINNING ANY EXCAVATION.

   DUE TO FEDERAL REGULATION TITLE 49, PART 192.181, CPS MUST MAINTAIN ACCESS TO GAS VALVES AT ALL TIMES. THE CONTRACTOR MUST PROTECT AND WORK AROUND ANY GAS VALVES THAT ARE IN THE PROJECT AREA.

   THE CONTRACTOR WILL BE RESPONSIBLE FOR PROTECTING ALL EXISTING UTILITIES ADJACENT TO THE WORK AREA.
4. SEE CROSS STREET PLAN AND PROFILE SHEETS AND INTERSECTION LAYOUT SHEETS FOR ADDITIONAL INFORMATION AT THE CROSS STREET.
5. SEE DRIVEWAY SUMMARY FOR ADDITIONAL INFORMATION PERTAINING TO DRIVEWAYS.

PRELIMINARY

90% SUBMITTAL
FOR INTERIM REVIEW ONLY
NOT FOR CONSTRUCTION, BIDDING, OR PERMIT PURPOSES.

CP&Y

ENGINEER JAIME AGUILAR
P.E. No. 87606 DATE 2/23/2017

BEXAR COUNTY
PUBLIC WORKS DEPARTMENT

NO	DATE	DESCRIPTION	DWG	CHK

REVISIONS

CP&Y
12500 SAN PEDRO AVENUE, SUITE 450
SAN ANTONIO, TEXAS 78216
TEL (210) 494-8004
FAX (210) 494-8286
T.B.P.E. FIRM # 1741

TALLEY ROAD

CROSS SECTIONS

SHEET 86 OF 88

PROJECT NUMBER:	SHEET NO.
	634

DESIGNED BY:	CP&Y	ROADWAY/HIGHWAY:	
CHECKED BY:	CP&Y	TALLEY ROAD	
DRAWN BY:	CP&Y	STATE	COUNTY
CHECKED BY:	CP&Y	TEXAS	BEXAR

2/23/2017 4:31:39 PM mberon
cpybw_ANSIB.tbl
cpypdf_ANSIB.pltcfg
pw:/Active Projects/BEXA14048.01/8.00 Plans and Drawings/8.10 Base Files/14048RDxsec_90.dgn

pw:/Active Projects/BEXA14048.01/8.00 Plans and Drawings/8.10 Base Files/14048RDxsec_90.dgn

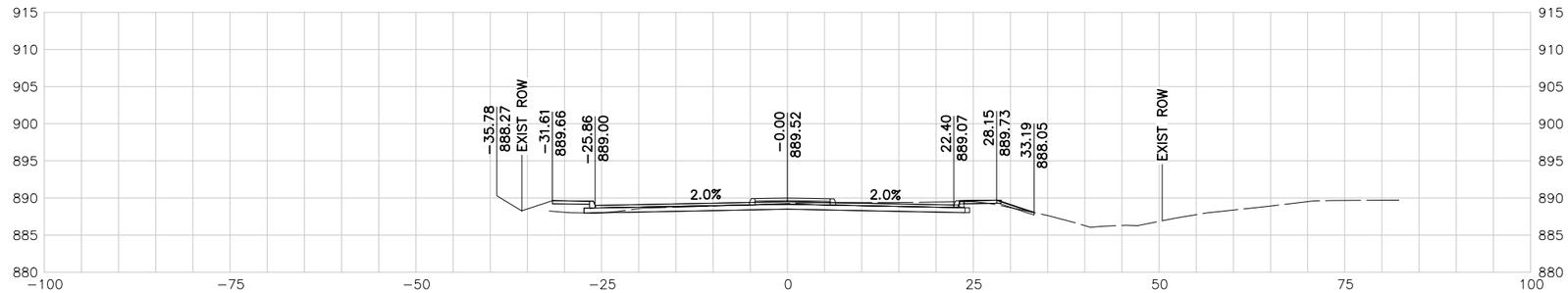

229+50.00 R1

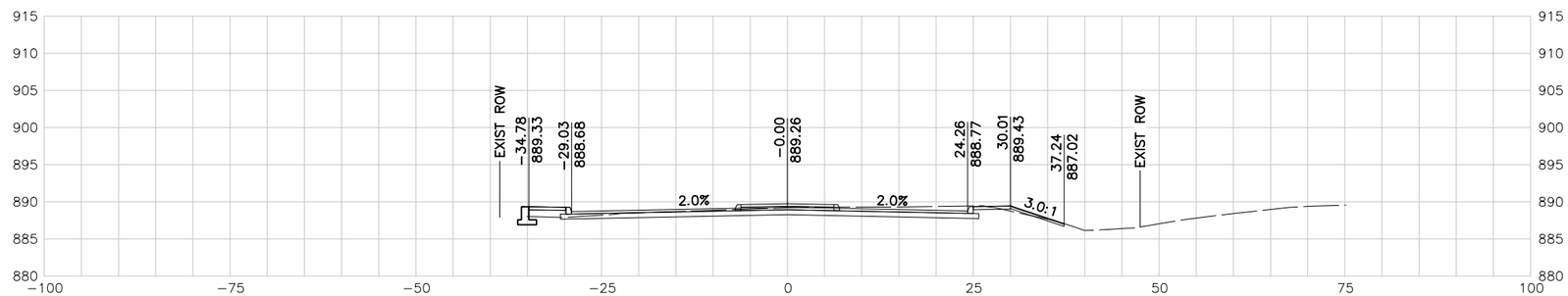

229+00.00 R1

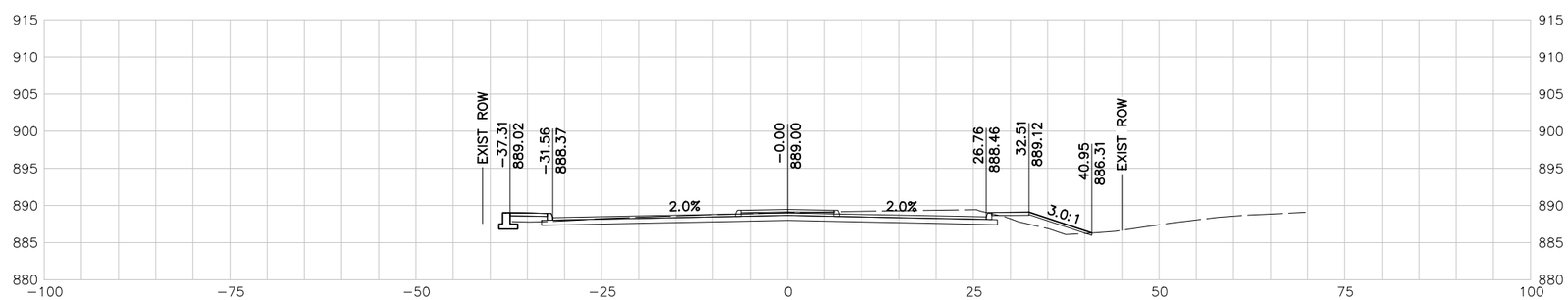

228+50.00 R1

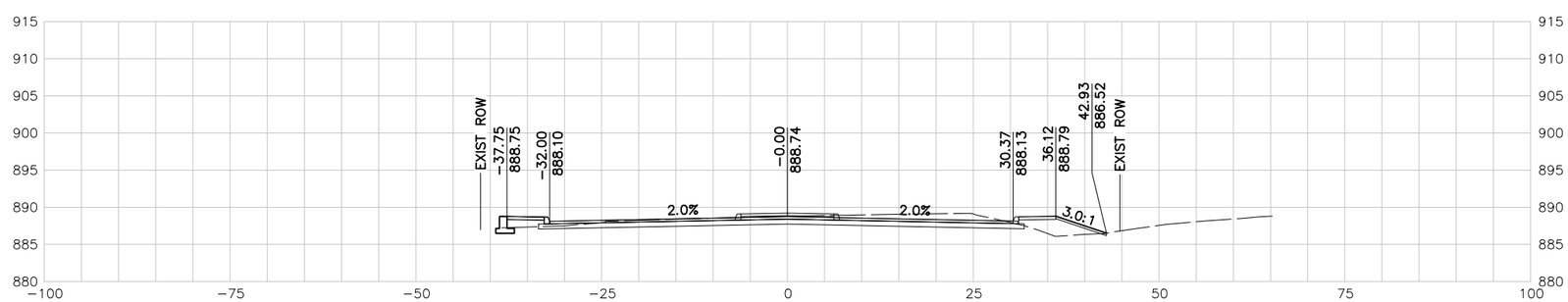

228+00.00 R1

10 5 0 10 20
SCALE FEET

NOTES:

1. UTILITY LOCATIONS ARE APPROXIMATE AND ARE SHOWN FROM THE BEST INFORMATION PROVIDED BY THE UTILITY COMPANIES AT THE TIME PLANS WERE PREPARED.
2. CONTRACTOR SHALL NOTIFY UTILITY COMPANIES AND LOCATE UTILITIES A MINIMUM OF 48 HOURS BEFORE BEGINNING WORK IN AREA.
3. CALL THE TEXAS STATE WIDE ONE CALL LOCATOR NUMBER 1-800-344-8377 48 HOURS BEFORE BEGINNING ANY EXCAVATION.

   DUE TO FEDERAL REGULATION TITLE 49, PART 192.181, CPS MUST MAINTAIN ACCESS TO GAS VALVES AT ALL TIMES. THE CONTRACTOR MUST PROTECT AND WORK AROUND ANY GAS VALVES THAT ARE IN THE PROJECT AREA.

   THE CONTRACTOR WILL BE RESPONSIBLE FOR PROTECTING ALL EXISTING UTILITIES ADJACENT TO THE WORK AREA.
4. SEE CROSS STREET PLAN AND PROFILE SHEETS AND INTERSECTION LAYOUT SHEETS FOR ADDITIONAL INFORMATION AT THE CROSS STREET.
5. SEE DRIVEWAY SUMMARY FOR ADDITIONAL INFORMATION PERTAINING TO DRIVEWAYS.

PRELIMINARY

90% SUBMITTAL
FOR INTERIM REVIEW ONLY
NOT FOR CONSTRUCTION, BIDDING, OR PERMIT PURPOSES.

CP&Y

ENGINEER JAIME AGUILAR
P.E. No. 87606 DATE 2/23/2017

BEXAR COUNTY
PUBLIC WORKS DEPARTMENT

NO	DATE	DESCRIPTION	DWG	CHK

REVISIONS

CP&Y
12500 SAN PEDRO AVENUE, SUITE 450
SAN ANTONIO, TEXAS 78216
TEL (210) 494-8004
FAX (210) 494-8286
T.B.P.E. FIRM # 1741

TALLEY ROAD

CROSS SECTIONS

SHEET 87 OF 88

PROJECT NUMBER:		SHEET NO.	
		635	
DESIGNED BY:	CP&Y	ROADWAY/HIGHWAY:	
CHECKED BY:	CP&Y	TALLEY ROAD	
DRAWN BY:	CP&Y	STATE	COUNTY
CHECKED BY:	CP&Y	TEXAS	BEXAR

cpybw_ANSIB.tbl
cpypdf_ANSIB.pltcfg
pw:/Active Projects/BEXA14048.01/8.00 Plans and Drawings/8.10 Base Files/14048RDxsec_90.dgn
2/23/2017 4:31:40 PM mberon
pw:/Active Projects/BEXA14048.01/8.00 Plans and Drawings/8.10 Base Files/14048RDxsec_90.dgn

10 5 0 10 20
SCALE FEET

NOTES:

1. UTILITY LOCATIONS ARE APPROXIMATE AND ARE SHOWN FROM THE BEST INFORMATION PROVIDED BY THE UTILITY COMPANIES AT THE TIME PLANS WERE PREPARED.
2. CONTRACTOR SHALL NOTIFY UTILITY COMPANIES AND LOCATE UTILITIES A MINIMUM OF 48 HOURS BEFORE BEGINNING WORK IN AREA.
3. CALL THE TEXAS STATE WIDE ONE CALL LOCATOR NUMBER 1-800-344-8377 48 HOURS BEFORE BEGINNING ANY EXCAVATION.

   DUE TO FEDERAL REGULATION TITLE 49, PART 192.181, CPS MUST MAINTAIN ACCESS TO GAS VALVES AT ALL TIMES. THE CONTRACTOR MUST PROTECT AND WORK AROUND ANY GAS VALVES THAT ARE IN THE PROJECT AREA.

   THE CONTRACTOR WILL BE RESPONSIBLE FOR PROTECTING ALL EXISTING UTILITIES ADJACENT TO THE WORK AREA.
4. SEE CROSS STREET PLAN AND PROFILE SHEETS AND INTERSECTION LAYOUT SHEETS FOR ADDITIONAL INFORMATION AT THE CROSS STREET.
5. SEE DRIVEWAY SUMMARY FOR ADDITIONAL INFORMATION PERTAINING TO DRIVEWAYS.

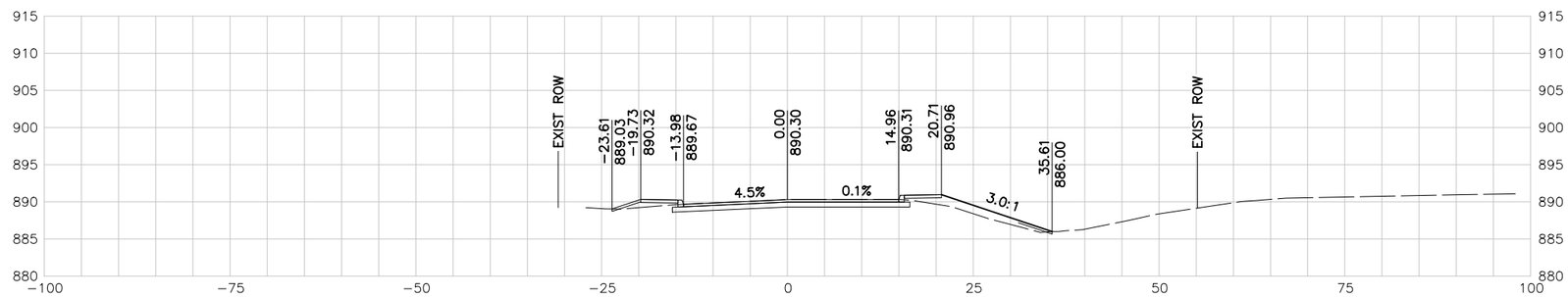

231+00.00 R1

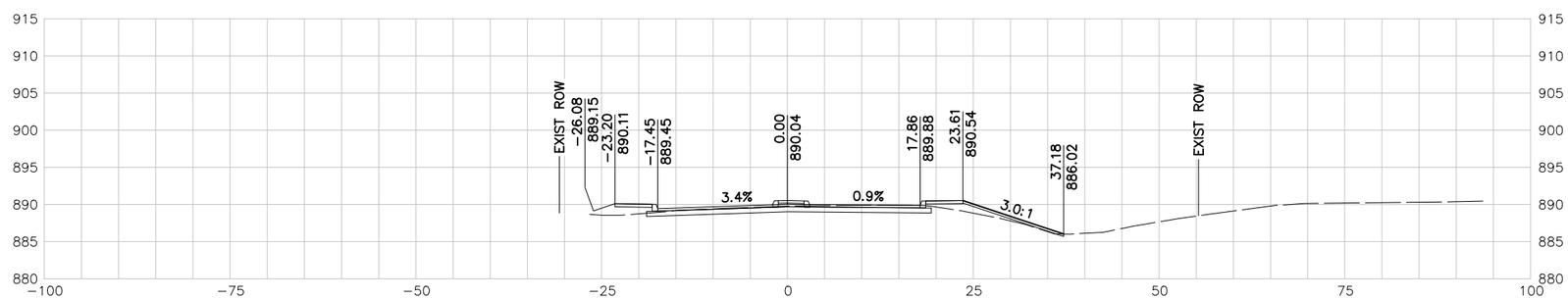

230+50.00 R1

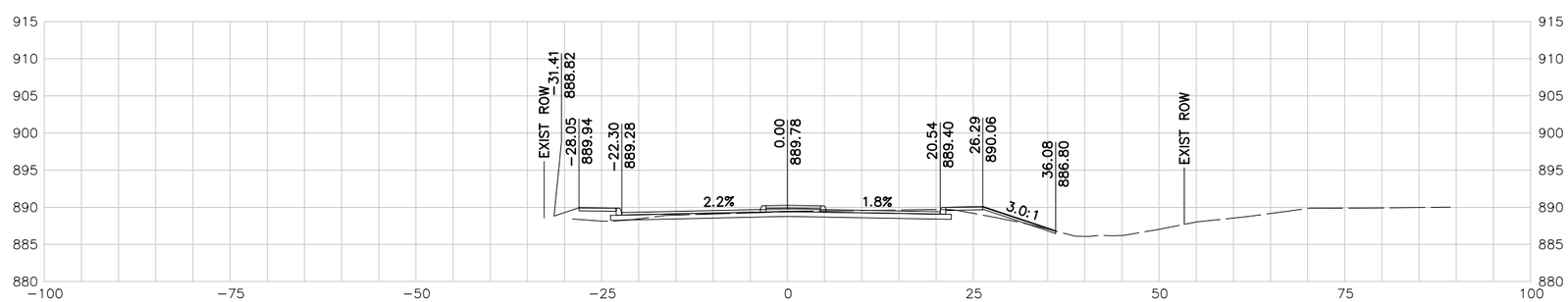

230+00.00 R1

PRELIMINARY

90% SUBMITTAL
FOR INTERIM REVIEW ONLY
NOT FOR CONSTRUCTION, BIDDING, OR PERMIT PURPOSES.

CP&Y

ENGINEER JAIME AGUILAR
P.E. No. 87606 DATE 2/23/2017

BEXAR COUNTY
PUBLIC WORKS DEPARTMENT

NO	DATE	DESCRIPTION	DWG	CHK

REVISIONS

CP&Y
12500 SAN PEDRO AVENUE, SUITE 450
SAN ANTONIO, TEXAS 78216
TEL (210) 494-8004
FAX (210) 494-8286
T.B.P.E. FIRM # 1741

TALLEY ROAD

CROSS SECTIONS

SHEET 88 OF 88

PROJECT NUMBER:		SHEET NO.	
		636	
DESIGNED BY:	CP&Y	ROADWAY/HIGHWAY:	
CHECKED BY:	CP&Y	TALLEY ROAD	
DRAWN BY:	CP&Y	STATE	COUNTY
CHECKED BY:	CP&Y	TEXAS	BEXAR

cpybw_ANSIB.tbl
cpypdf_ANSIB.pltcfg
pw:/Active Projects/BEXA14048.01/8.00 Plans and Drawings/8.10 Base Files/14048RDxsec_90.dgn
2/23/2017 4:31:40 PM mberon
pw:/Active Projects/BEXA14048.01/8.00 Plans and Drawings/8.10 Base Files/14048RDxsec_90.dgn

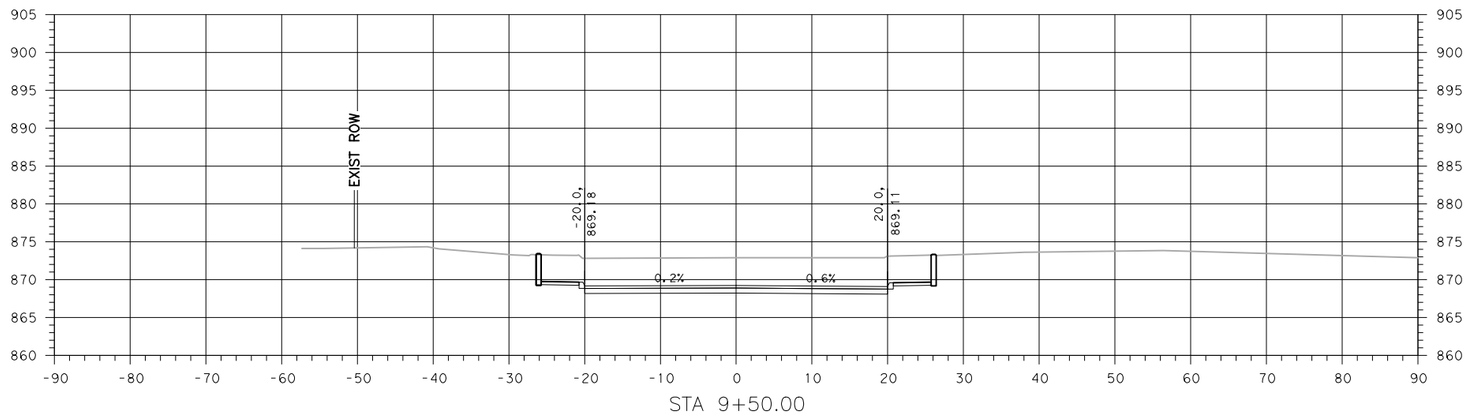

STA 9+50.00

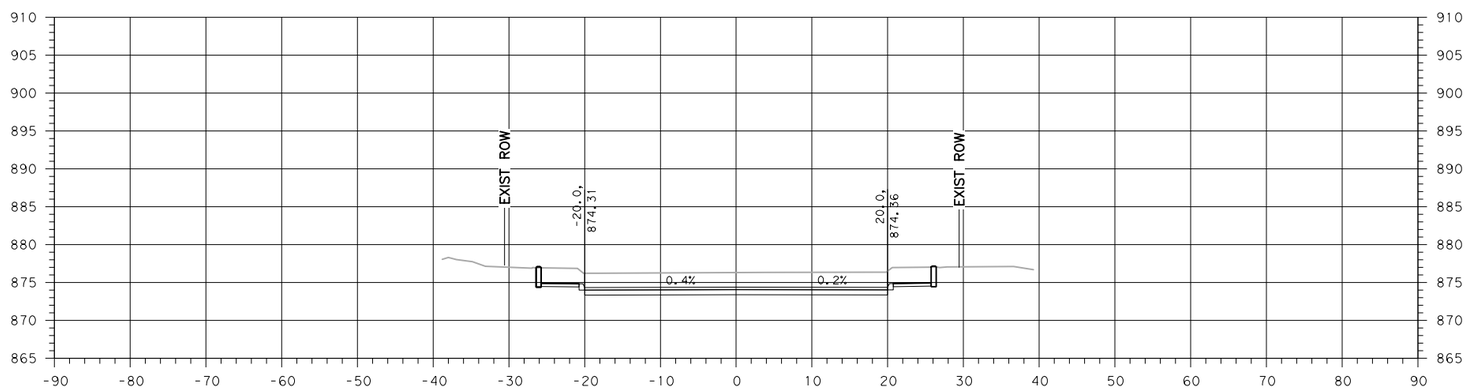

STA 9+00.00

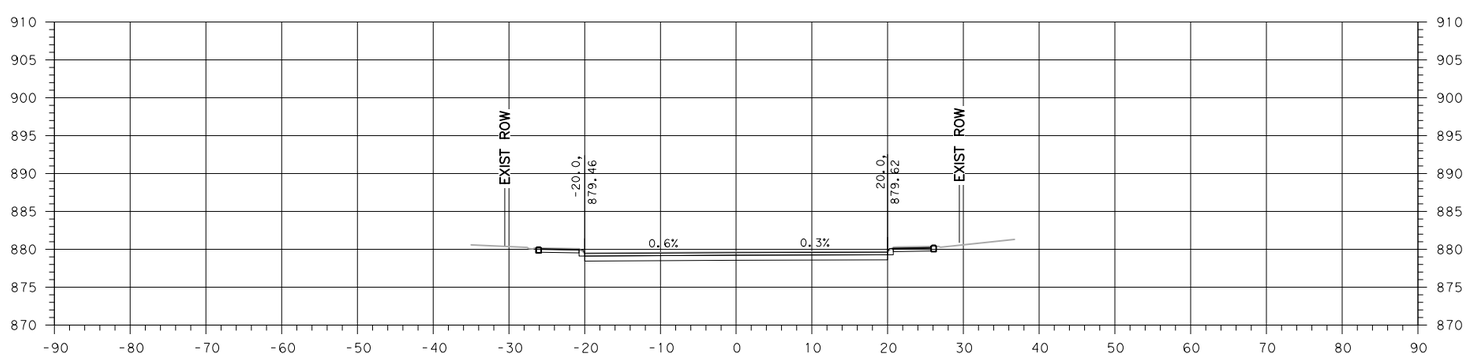

STA 8+50.00

10 5 0 10 20

SCALE FEET

NOTES:

1. ALL UTILITIES SHOWN ARE EXISTING.
2. UTILITY LOCATIONS ARE APPROXIMATE AND ARE SHOWN FROM THE BEST INFORMATION PROVIDED BY THE UTILITY COMPANIES AT THE TIME PLANS WERE PREPARED.
3. CONTRACTOR SHALL NOTIFY UTILITY COMPANIES AND LOCATE UTILITIES A MINIMUM OF 48 HOURS BEFORE BEGINNING WORK IN AREA.
4. CALL THE TEXAS STATE WIDE ONE CALL LOCATOR NUMBER 1-800-344-8377 48 HOURS BEFORE BEGINNING ANY EXCAVATION.

   DUE TO FEDERAL REGULATION TITLE 49, PART 192.181, CPS MUST MAINTAIN ACCESS TO GAS VALVES AT ALL TIMES. THE CONTRACTOR MUST PROTECT AND WORK AROUND ANY GAS VALVES THAT ARE IN THE PROJECT AREA.

   THE CONTRACTOR WILL BE RESPONSIBLE FOR PROTECTING ALL EXISTING UTILITIES ADJACENT TO THE WORK AREA.
5. SEE CROSS STREET PLAN AND PROFILE SHEETS AND INTERSECTION LAYOUT SHEETS FOR ADDITIONAL INFORMATION AT THE CROSS STREET.
6. SEE DRIVEWAY SUMMARY FOR ADDITIONAL INFORMATION PERTAINING TO DRIVEWAYS.

PRELIMINARY

90% SUBMITTAL
FOR INTERIM REVIEW ONLY
NOT FOR CONSTRUCTION, BIDDING, OR PERMIT PURPOSES.

CP&Y

ENGINEER JAIME AGUILAR
P.E. No. 87606 DATE 2/23/2017

BEXAR COUNTY
PUBLIC WORKS DEPARTMENT

NO	DATE	DESCRIPTION	DWG	CHK

REVISIONS

CP&Y
12500 SAN PEDRO AVENUE, SUITE 450
SAN ANTONIO, TEXAS 78216
TEL (210) 494-8004
FAX (210) 494-8286
T.B.P.E. FIRM # 1741

TALLEY ROAD

CROSS SECTIONS

SHEET 1 OF 1

PROJECT NUMBER:		SHEET NO.	
		637	
DESIGNED BY:	CP&Y	ROADWAY/HIGHWAY:	
CHECKED BY:	CP&Y	TALLEY ROAD	
DRAWN BY:	CP&Y	STATE	COUNTY
CHECKED BY:	CP&Y	TEXAS	BEXAR

2/23/2017 12:17:31 PM rgonzales
cpybw_ANSIB.tbl
cpypdf_ANSIB.plt
pw:/Active Projects/BEXA14048.01/8.00 Plans and Drawings/8.10 Base Files/14048RDix05.dgn
pw:/Active Projects/BEXA14048.01/8.00 Plans and Drawings/8.10 Base Files/14048RDix05.dgn

SUBSURFACE UTILITY ENGINEERING
for

TALLEY RD.
FROM WISEMAN BLVD. TO FM 1957 (POTRANCO RD.)
BEXAR COUNTY, TEXAS

CP&Y, INC.

HALFF

AVO# 31136
SEPTEMBER 2015

HALFF ASSOCIATES, INC.
ENGINEERS - SURVEYORS - SCIENTISTS
PRELIMINARY - FOR INTERIM REVIEW ONLY
These documents are for Interim Review and not Intended for Regulatory Approval, Permit, Bidding, or Construction purposes. They were prepared by or under the supervision of:

Ryan D. Lewis	95767	9/18/2015
Type or Print Name	PE#	Date

(NOTE: LINE SIZES ARE FROM BEST AVAILABLE RECORDS.)

SUBSURFACE UTILITY ENGINEERING
TALLEY RD.
FROM WISEMAN BLVD TO FM 1957 (POTRANCO RD)
CP&Y, INC.
BEXAR COUNTY, TEXAS
HALFF
TBPE #F-312

DESIGN	DRAWN	DATE	SCALE	NOTES	FILE	NO.
HALFF	HALFF	SEPTEMBER 2015	NONE	31136	SH-COVER	COVER

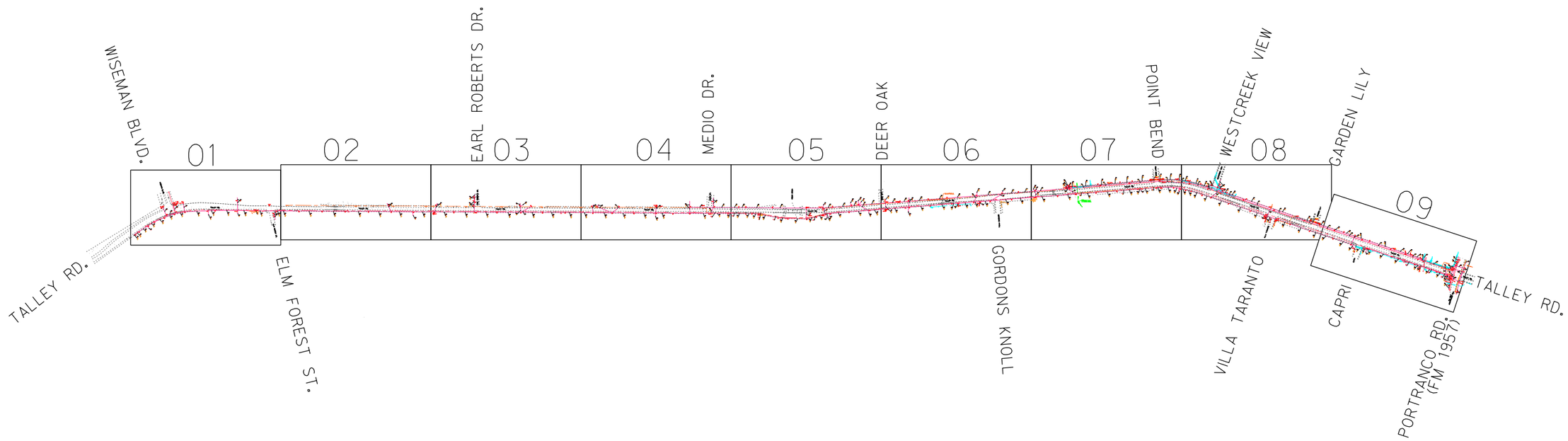

LEGEND:

LEVEL "A"	LEVEL "B"	LEVEL "C" & "D"	
			TEST HOLE
			TELEPHONE LINE
			FIBER OPTIC LINE
			CABLE TELEVISION LINE
			WATER LINE
			WASTEWATER LINE
			GAS LINE
			ELECTRIC LINE
			OVERHEAD UTILITY LINE

TPED	TELEPHONE PEDESTAL	PP/R	POWER POLE W/RISER
TMH	TELEPHONE MANHOLE	EB	ELECTRIC BOX
TCAB	TELEPHONE CABINET	EM	ELECTRIC METER
UGS	TELEPHONE SPLICE	EPED	ELECTRIC PEDESTAL
FHH	FIBER OPTIC HAND HOLE	LP	LIGHT POLE
FCAB	FIBER OPTIC CABINET	GL	GROUND LIGHT
CPED	TELEVISION PEDESTAL	TRANS	ELECTRIC TRANSFORMER
FH	FIRE HYDRANT	TSP	TRAFFIC SIGNAL POLE
WV	WATER VALVE	TCB	TRAFFIC CONTROL BOX
WM	WATER METER		GUY WIRE
WVP	WATER VENT PIPE		UTILITY CONTINUATION
GVLT	GAS VAULT	E	UTILITY END POINT
GM	GAS METER	ABN.	ABANDONED UTILITY
GV	GAS VALVE	(QL-B)	QUALITY LEVEL B
GTS	GAS TEST STATION	(QL-C)	QUALITY LEVEL C
GVP	GAS VENT PIPE	(QL-D)	QUALITY LEVEL D
PP	POWER POLE	OH	OVERHEAD UTILITIES
		CP	CONTROL POINT

SURVEY CONTROL

C.P. No.	NORTHING	EASTING	ELEVATION	DESC.	SHT No.
11	13717744.85	2045768.33	887.25	FIR	01
12	13716801.00	2046118.87	884.83	FIR	01
21	13708999.15	2049046.36	895.48	FIR	07
24	13706169.81	2049162.66	949.18	FIR	09

OWNERSHIP LEGEND:	OWNER:	CONTACT:	PHONE:
TELEPHONE(T)	= AT&T	PHILIP AUSTIN	210-283-1839
FIBER OPTIC CABLE(FO)	= AT&T	PHILIP AUSTIN	210-283-1839
CABLE TELEVISION(C)	= TIME WARNER CABLE	STEPHON ROBERTSON	210-352-4306
WATER(W)	= SAWS	DARYL SPILLMANN	210-233-3012
WASTEWATER(WW)	= SAWS	DARYL SPILLMANN	210-233-3012
GAS(G)	= CPS ENERGY	TOM NARENDORF	210-353-3766
ELECTRIC(E)	= CPS ENERGY	MIKE DENNING	210-353-2822
ELECTRIC(E1)	= BEXAR COUNTY	KURT FRANZ	210-631-0250

FIELD WORK BEGAN ON AUGUST 17, 2015 AND WAS COMPLETED AUGUST 28, 2015. HALFF ASSOCIATES EXPRESSLY DISCLAIMS RESPONSIBILITY FOR NEW UTILITY INSTALLATIONS, MODIFICATIONS OR ADJUSTMENTS TO EXISTING UTILITIES AFTER AUGUST 28, 2015.

ALL UTILITY INFORMATION HEREON IS DEPICTED TO QUALITY LEVEL "B" UNLESS OTHERWISE NOTED.

SIZE INFORMATION SHOWN HEREON IS TAKEN FROM AVAILABLE UTILITY RECORDS:

LEVEL "B" INFORMATION OBTAINED THROUGH THE APPLICATION OF APPROPRIATE SURFACE GEOPHYSICAL METHODS TO DETERMINE THE EXISTENCE AND APPROXIMATE HORIZONTAL POSITION OF UTILITIES.

LEVEL "C" DEPICTED ACCORDING TO RECORD INFORMATION AND EXISTING ASSOCIATED UTILITY STRUCTURES. NO ELECTRONIC INFORMATION WAS OBTAINED

LEVEL "D" DEPICTED ACCORDING TO RECORD INFORMATION. NO ELECTRONIC INFORMATION WAS OBTAINED.

UNLESS OTHERWISE NOTED, UTILITY LINE LIMITS DEPICTED REPRESENT FIELD DESIGNATING LIMITS AND NOT END POINTS OF UTILITIES.

UTILITY INFORMATION LABELED LEVEL "C" OR "D" IS DERIVED FROM FURNISHED RECORDS. SUCH INFORMATION MAY NOT BE ACCURATE OR RELIABLE. HALFF ASSOCIATES EXPRESSLY DISCLAIMS RESPONSIBILITY FOR THE ACCURACY OR RELIABILITY OF UTILITY INFORMATION DEPICTED ACCORDING TO RECORDS.

THE ROADWAY AND ROW FILES WERE PROVIDED TO HALFF BY OTHERS AND ARE SHOWN FOR REFERENCE PURPOSES ONLY.

STORM SEWER AND ASSOCIATED APPURTENANCES ARE NOT SHOWN ON THESE PLANS.

WASTEWATER FLOWLINE INFORMATION SHOWN HEREON ARE BASED ON FIELD MEASURED DEPTHS AND SHALL BE DEEMED APPROXIMATE.

HALFF ASSOCIATES, INC.
ENGINEERS - SURVEYORS - SCIENTISTS
PRELIMINARY - FOR INTERIM REVIEW ONLY
These documents are for Interim Review and not Intended for Regulatory Approval, Permit, Bidding, or Construction purposes. They were prepared by or under the supervision of:

Ryan D. Lewis	95767	9/18/2015
Type or Print Name	PE#	Date

0 250 500 750 1000
SCALE: 1"=1000'

(NOTE: LINE SIZES ARE FROM BEST AVAILABLE RECORDS.)

SUBSURFACE UTILITY ENGINEERING

TALLEY RD.
FROM WISEMAN BLVD TO FM 1957 (POTRANCO RD)

CP&Y, INC.

BEXAR COUNTY, TEXAS

HALFF
TBPE #F-312

DESIGN	DRAWN	DATE	SCALE	NOTES	FILE	NO.
HALFF	HALFF	SEPTEMBER 2015	1"=1000'	31136	SH-MASTER	MASTER

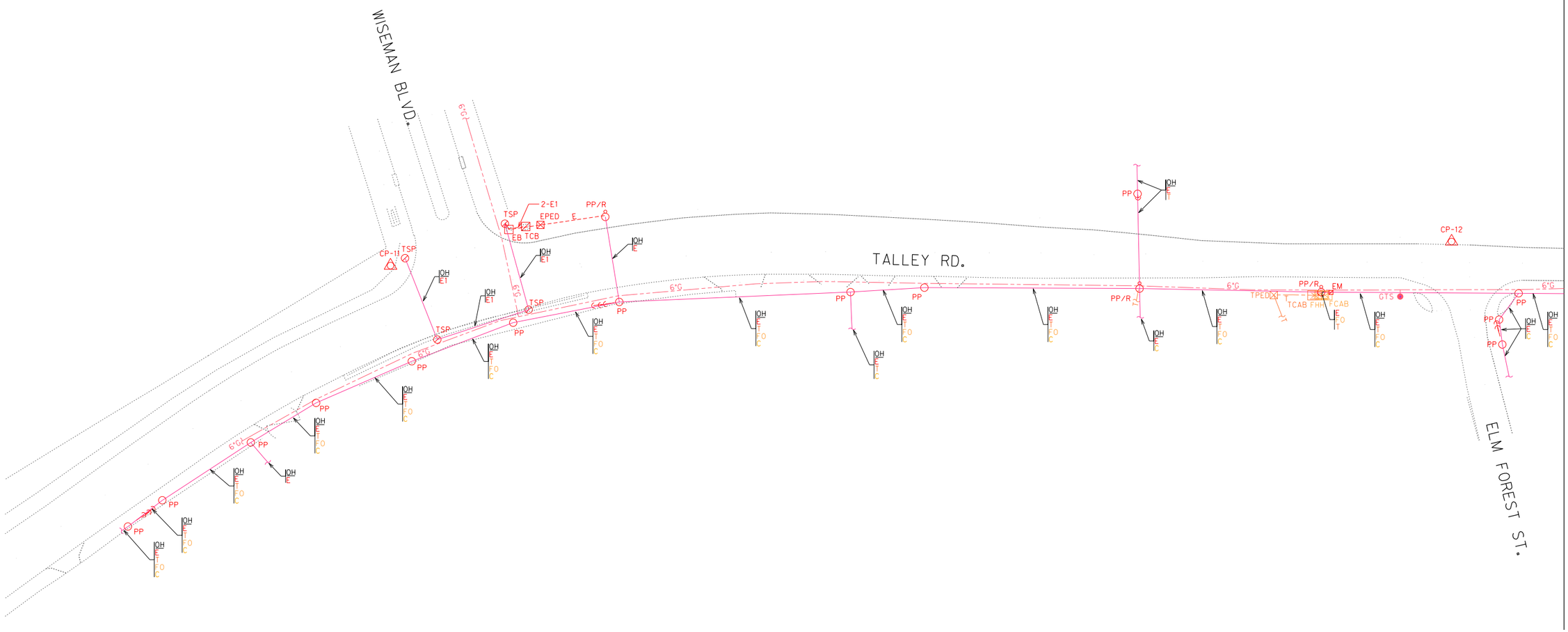

LEGEND:

LEVEL "A"	LEVEL "B"	LEVEL "C" & "D"	
			TEST HOLE
			TELEPHONE LINE
			FIBER OPTIC LINE
			CABLE TELEVISION LINE
			WATER LINE
			WASTEWATER LINE
			GAS LINE
			ELECTRIC LINE
			OVERHEAD UTILITY LINE

TPED	TELEPHONE PEDESTAL	PP/R	POWER POLE W/RISER
TMH	TELEPHONE MANHOLE	EB	ELECTRIC BOX
TCAB	TELEPHONE CABINET	EM	ELECTRIC METER
UCS	TELEPHONE SPLICE	EPED	ELECTRIC PEDESTAL
FHH	FIBER OPTIC HAND HOLE	LP	LIGHT POLE
FCAB	FIBER OPTIC CABINET	GL	GROUND LIGHT
CPED	TELEVISION PEDESTAL	TRANS	ELECTRIC TRANSFORMER
FH	FIRE HYDRANT	TSP	TRAFFIC SIGNAL POLE
WV	WATER VALVE	TCB	TRAFFIC CONTROL BOX
WM	WATER METER		GUY WIRE
WVP	WATER VENT PIPE		UTILITY CONTINUATION
GVLT	GAS VAULT		UTILITY END POINT
GM	GAS METER	ABN.	ABANDONED UTILITY
GV	GAS VALVE	(QL-B)	QUALITY LEVEL B
GTS	GAS TEST STATION	(QL-C)	QUALITY LEVEL C
GVP	GAS VENT PIPE	(QL-D)	QUALITY LEVEL D
PP	POWER POLE	OH	OVERHEAD UTILITIES
		CP	CONTROL POINT

OWNERSHIP LEGEND:	OWNER:	CONTACT:	PHONE:
TELEPHONE(T)	= AT&T	PHILIP AUSTIN	210-283-1839
FIBER OPTIC CABLE(FO)	= AT&T	PHILIP AUSTIN	210-283-1839
CABLE TELEVISION(C)	= TIME WARNER CABLE	STEPHON ROBERTSON	210-352-4306
WATER(W)	= SAWS	DARYL SPILLMANN	210-233-3012
WASTEWATER(WW)	= SAWS	DARYL SPILLMANN	210-233-3012
GAS(G)	= CPS ENERGY	TOM NARENDORF	210-353-3766
ELECTRIC(E)	= CPS ENERGY	MIKE DENNING	210-353-2822
ELECTRIC(E1)	= BEXAR COUNTY	KURT FRANZ	210-631-0250

FIELD WORK BEGAN ON AUGUST 17, 2015 AND WAS COMPLETED AUGUST 28, 2015. HALFF ASSOCIATES EXPRESSLY DISCLAIMS RESPONSIBILITY FOR NEW UTILITY INSTALLATIONS, MODIFICATIONS OR ADJUSTMENTS TO EXISTING UTILITIES AFTER AUGUST 28, 2015.

ALL UTILITY INFORMATION HEREON IS DEPICTED TO QUALITY LEVEL "B" UNLESS OTHERWISE NOTED.

SIZE INFORMATION SHOWN HEREON IS TAKEN FROM AVAILABLE UTILITY RECORDS:

LEVEL "B" INFORMATION OBTAINED THROUGH THE APPLICATION OF APPROPRIATE SURFACE GEOPHYSICAL METHODS TO DETERMINE THE EXISTENCE AND APPROXIMATE HORIZONTAL POSITION OF UTILITIES.

LEVEL "C" DEPICTED ACCORDING TO RECORD INFORMATION AND EXISTING ASSOCIATED UTILITY STRUCTURES. NO ELECTRONIC INFORMATION WAS OBTAINED

LEVEL "D" DEPICTED ACCORDING TO RECORD INFORMATION. NO ELECTRONIC INFORMATION WAS OBTAINED.

UNLESS OTHERWISE NOTED, UTILITY LINE LIMITS DEPICTED REPRESENT FIELD DESIGNATING LIMITS AND NOT END POINTS OF UTILITIES.

UTILITY INFORMATION LABELED LEVEL "C" OR "D" IS DERIVED FROM FURNISHED RECORDS. SUCH INFORMATION MAY NOT BE ACCURATE OR RELIABLE. HALFF ASSOCIATES EXPRESSLY DISCLAIMS RESPONSIBILITY FOR THE ACCURACY OR RELIABILITY OF UTILITY INFORMATION DEPICTED ACCORDING TO RECORDS.

THE ROADWAY AND ROW FILES WERE PROVIDED TO HALFF BY OTHERS AND ARE SHOWN FOR REFERENCE PURPOSES ONLY.

STORM SEWER AND ASSOCIATED APPURTENANCES ARE NOT SHOWN ON THESE PLANS.

WASTEWATER FLOWLINE INFORMATION SHOWN HEREON ARE BASED ON FIELD MEASURED DEPTHS AND SHALL BE DEEMED APPROXIMATE.

HALFF ASSOCIATES, INC.
ENGINEERS - SURVEYORS - SCIENTISTS
PRELIMINARY - FOR INTERIM REVIEW ONLY
These documents are for Interim Review and not intended for Regulatory Approval, Permit, Bidding, or Construction purposes. They were prepared by or under the supervision of:

Ryan D. Lewis	95767	9/18/2015
Type or Print Name	PE#	Date

0 25 50 75 100
SCALE: 1"=100'

(NOTE: LINE SIZES ARE FROM BEST AVAILABLE RECORDS.)

SUBSURFACE UTILITY ENGINEERING

TALLEY RD.
FROM WISEMAN BLVD TO FM 1957 (POTRANCO RD)

CP&Y, INC.

BEXAR COUNTY, TEXAS

HALFF
TBPE #F-312

DESIGN	DRAWN	DATE	SCALE	NOTES	FILE	NO.
HALFF	HALFF	SEPTEMBER 2015	1"=100'	31136	SH-01	01

MATCHLINE SEE SHEET 01

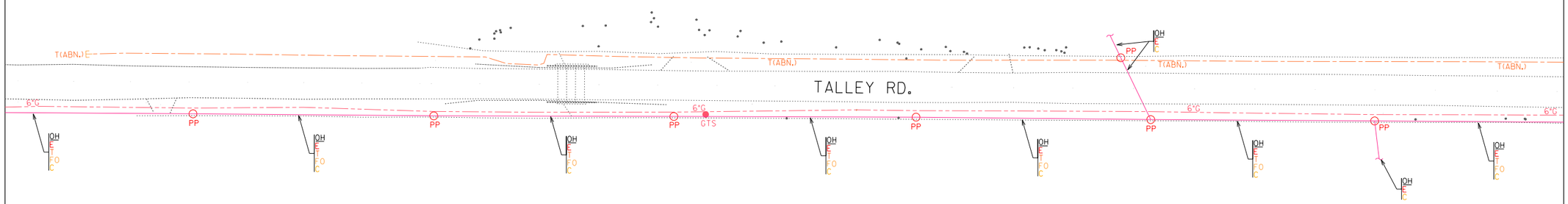

MATCHLINE SEE SHEET 03

LEGEND:

LEVEL "A" LEVEL "B" LEVEL "C" & "D"

TEST HOLE
TELEPHONE LINE
FIBER OPTIC LINE
CABLE TELEVISION LINE
WATER LINE
WASTEWATER LINE
GAS LINE
ELECTRIC LINE
OVERHEAD UTILITY LINE

TPED TELEPHONE PEDESTAL
TMH TELEPHONE MANHOLE
TCAB TELEPHONE CABINET
UGS TELEPHONE SPLICE
FHH FIBER OPTIC HAND HOLE
FCAB FIBER OPTIC CABINET
CPED TELEVISION PEDESTAL
FH FIRE HYDRANT
WV WATER VALVE
WM WATER METER
WVP WATER VENT PIPE
GVLT GAS VAULT
GM GAS METER
GV GAS VALVE
GTS GAS TEST STATION
GVP GAS VENT PIPE
PP POWER POLE

PP/R POWER POLE W/RISER
EB ELECTRIC BOX
EM ELECTRIC METER
EPED ELECTRIC PEDESTAL
LP LIGHT POLE
GL GROUND LIGHT
TRANS ELECTRIC TRANSFORMER
TSP TRAFFIC SIGNAL POLE
TCB TRAFFIC CONTROL BOX
GUY WIRE
UTILITY CONTINUATION
UTILITY END POINT
ABN. ABANDONED UTILITY
(QL-B) QUALITY LEVEL B
(QL-C) QUALITY LEVEL C
(QL-D) QUALITY LEVEL D
OH OVERHEAD UTILITIES
CP CONTROL POINT

OWNERSHIP LEGEND:	OWNER:	CONTACT:	PHONE:
TELEPHONE(T)	= AT&T	PHILIP AUSTIN	210-283-1839
FIBER OPTIC CABLE(FO)	= AT&T	PHILIP AUSTIN	210-283-1839
CABLE TELEVISION(C)	= TIME WARNER CABLE	STEPHON ROBERTSON	210-352-4306
WATER(W)	= SAWS	DARYL SPILLMANN	210-233-3012
WASTEWATER(WW)	= SAWS	DARYL SPILLMANN	210-233-3012
GAS(G)	= CPS ENERGY	TOM NARENDORF	210-353-3766
ELECTRIC(E)	= CPS ENERGY	MIKE DENNING	210-353-2822
ELECTRIC(E1)	= BEXAR COUNTY	KURT FRANZ	210-631-0250

FIELD WORK BEGAN ON AUGUST 17, 2015 AND WAS COMPLETED AUGUST 28, 2015. HALFF ASSOCIATES EXPRESSLY DISCLAIMS RESPONSIBILITY FOR NEW UTILITY INSTALLATIONS, MODIFICATIONS OR ADJUSTMENTS TO EXISTING UTILITIES AFTER AUGUST 28, 2015.

ALL UTILITY INFORMATION HEREON IS DEPICTED TO QUALITY LEVEL "B" UNLESS OTHERWISE NOTED.

SIZE INFORMATION SHOWN HEREON IS TAKEN FROM AVAILABLE UTILITY RECORDS:

LEVEL "B" INFORMATION OBTAINED THROUGH THE APPLICATION OF APPROPRIATE SURFACE GEOPHYSICAL METHODS TO DETERMINE THE EXISTENCE AND APPROXIMATE HORIZONTAL POSITION OF UTILITIES.

LEVEL "C" DEPICTED ACCORDING TO RECORD INFORMATION AND EXISTING ASSOCIATED UTILITY STRUCTURES. NO ELECTRONIC INFORMATION WAS OBTAINED

LEVEL "D" DEPICTED ACCORDING TO RECORD INFORMATION. NO ELECTRONIC INFORMATION WAS OBTAINED.

UNLESS OTHERWISE NOTED, UTILITY LINE LIMITS DEPICTED REPRESENT FIELD DESIGNATING LIMITS AND NOT END POINTS OF UTILITIES.

UTILITY INFORMATION LABELED LEVEL "C" OR "D" IS DERIVED FROM FURNISHED RECORDS. SUCH INFORMATION MAY NOT BE ACCURATE OR RELIABLE. HALFF ASSOCIATES EXPRESSLY DISCLAIMS RESPONSIBILITY FOR THE ACCURACY OR RELIABILITY OF UTILITY INFORMATION DEPICTED ACCORDING TO RECORDS.

THE ROADWAY AND ROW FILES WERE PROVIDED TO HALFF BY OTHERS AND ARE SHOWN FOR REFERENCE PURPOSES ONLY.

STORM SEWER AND ASSOCIATED APPURTENANCES ARE NOT SHOWN ON THESE PLANS.

WASTEWATER FLOWLINE INFORMATION SHOWN HEREON ARE BASED ON FIELD MEASURED DEPTHS AND SHALL BE DEEMED APPROXIMATE.

HALFF ASSOCIATES, INC.
ENGINEERS - SURVEYORS - SCIENTISTS
PRELIMINARY - FOR INTERIM REVIEW ONLY
These documents are for Interim Review and not Intended for Regulatory Approval, Permit, Bidding, or Construction purposes. They were prepared by or under the supervision of:

Ryan D. Lewis	95767	9/18/2015
Type or Print Name	PE#	Date

0 25 50 75 100
SCALE: 1"=100'

(NOTE: LINE SIZES ARE FROM BEST AVAILABLE RECORDS.)

SUBSURFACE UTILITY ENGINEERING

TALLEY RD.
FROM WISEMAN BLVD TO FM 1957 (POTRANCO RD)

CP&Y, INC.

BEXAR COUNTY, TEXAS

HALFF
TBPE #F-312

DESIGN	DRAWN	DATE	SCALE	NOTES	FILE	NO.
HALFF	HALFF	SEPTEMBER 2015	1"=100'	31136	SH-02	02

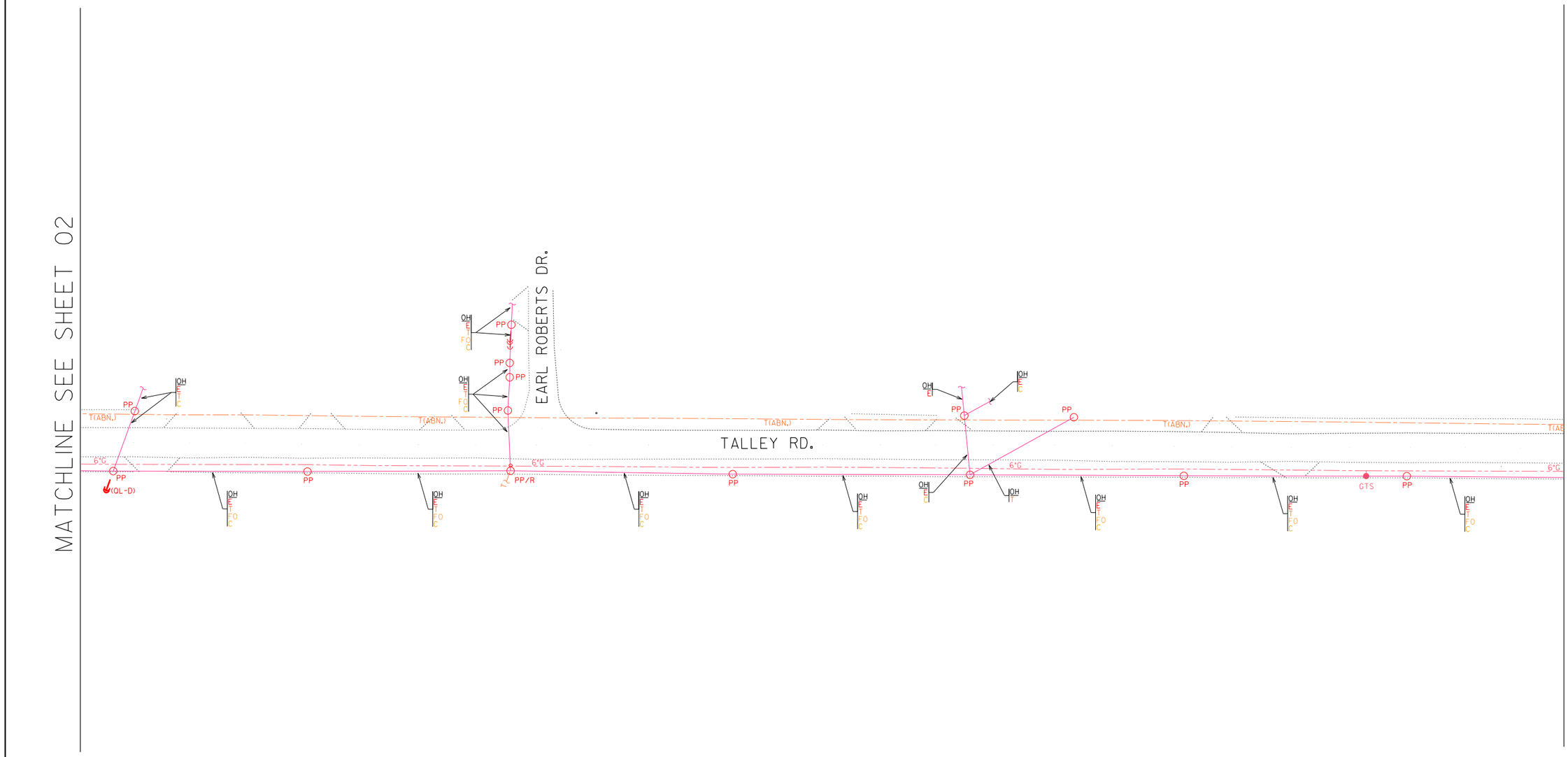

LEGEND:

LEVEL "A" LEVEL "B" LEVEL "C" & "D"

TEST HOLE
TELEPHONE LINE
FIBER OPTIC LINE
CABLE TELEVISION LINE
WATER LINE
WASTEWATER LINE
GAS LINE
ELECTRIC LINE
OVERHEAD UTILITY LINE

TPED TELEPHONE PEDESTAL
TMH TELEPHONE MANHOLE
TCAB TELEPHONE CABINET
UGS TELEPHONE SPLICE
FHH FIBER OPTIC HAND HOLE
FCAB FIBER OPTIC CABINET
CPED TELEVISION PEDESTAL
FH FIRE HYDRANT
WV WATER VALVE
WM WATER METER
WVP WATER VENT PIPE
GVLT GAS VAULT
GM GAS METER
GV GAS VALVE
GTS GAS TEST STATION
GVP GAS VENT PIPE
PP POWER POLE

PP/R POWER POLE W/RISER
EB ELECTRIC BOX
EM ELECTRIC METER
EPED ELECTRIC PEDESTAL
LP LIGHT POLE
GL GROUND LIGHT
TRANS ELECTRIC TRANSFORMER
TSP TRAFFIC SIGNAL POLE
TCB TRAFFIC CONTROL BOX
GUY WIRE
UTILITY CONTINUATION
UTILITY END POINT
ABN. ABANDONED UTILITY
(QL-B) QUALITY LEVEL B
(QL-C) QUALITY LEVEL C
(QL-D) QUALITY LEVEL D
OH OVERHEAD UTILITIES
CP CONTROL POINT

OWNERSHIP LEGEND:	OWNER:	CONTACT:	PHONE:
TELEPHONE(T)	= AT&T	PHILIP AUSTIN	210-283-1839
FIBER OPTIC CABLE(FO)	= AT&T	PHILIP AUSTIN	210-283-1839
CABLE TELEVISION(C)	= TIME WARNER CABLE	STEPHON ROBERTSON	210-352-4306
WATER(W)	= SAWS	DARYL SPILLMANN	210-233-3012
WASTEWATER(WW)	= SAWS	DARYL SPILLMANN	210-233-3012
GAS(G)	= CPS ENERGY	TOM NARENDORF	210-353-3766
ELECTRIC(E)	= CPS ENERGY	MIKE DENNING	210-353-2822
ELECTRIC(E1)	= BEXAR COUNTY	KURT FRANZ	210-631-0250

FIELD WORK BEGAN ON AUGUST 17, 2015 AND WAS COMPLETED AUGUST 28, 2015. HALFF ASSOCIATES EXPRESSLY DISCLAIMS RESPONSIBILITY FOR NEW UTILITY INSTALLATIONS, MODIFICATIONS OR ADJUSTMENTS TO EXISTING UTILITIES AFTER AUGUST 28, 2015.

ALL UTILITY INFORMATION HEREON IS DEPICTED TO QUALITY LEVEL "B" UNLESS OTHERWISE NOTED.

SIZE INFORMATION SHOWN HEREON IS TAKEN FROM AVAILABLE UTILITY RECORDS:

LEVEL "B" INFORMATION OBTAINED THROUGH THE APPLICATION OF APPROPRIATE SURFACE GEOPHYSICAL METHODS TO DETERMINE THE EXISTENCE AND APPROXIMATE HORIZONTAL POSITION OF UTILITIES.

LEVEL "C" DEPICTED ACCORDING TO RECORD INFORMATION AND EXISTING ASSOCIATED UTILITY STRUCTURES. NO ELECTRONIC INFORMATION WAS OBTAINED

LEVEL "D" DEPICTED ACCORDING TO RECORD INFORMATION. NO ELECTRONIC INFORMATION WAS OBTAINED.

UNLESS OTHERWISE NOTED, UTILITY LINE LIMITS DEPICTED REPRESENT FIELD DESIGNATING LIMITS AND NOT END POINTS OF UTILITIES.

UTILITY INFORMATION LABELED LEVEL "C" OR "D" IS DERIVED FROM FURNISHED RECORDS. SUCH INFORMATION MAY NOT BE ACCURATE OR RELIABLE. HALFF ASSOCIATES EXPRESSLY DISCLAIMS RESPONSIBILITY FOR THE ACCURACY OR RELIABILITY OF UTILITY INFORMATION DEPICTED ACCORDING TO RECORDS.

THE ROADWAY AND ROW FILES WERE PROVIDED TO HALFF BY OTHERS AND ARE SHOWN FOR REFERENCE PURPOSES ONLY.

STORM SEWER AND ASSOCIATED APPURTENANCES ARE NOT SHOWN ON THESE PLANS.

WASTEWATER FLOWLINE INFORMATION SHOWN HEREON ARE BASED ON FIELD MEASURED DEPTHS AND SHALL BE DEEMED APPROXIMATE.

HALFF ASSOCIATES, INC.
ENGINEERS - SURVEYORS - SCIENTISTS
PRELIMINARY - FOR INTERIM REVIEW ONLY
These documents are for Interim Review and not Intended for Regulatory Approval, Permit, Bidding, or Construction purposes. They were prepared by or under the supervision of:

Ryan D. Lewis	95767	9/18/2015
Type or Print Name	PE#	Date

0 25 50 75 100
SCALE: 1"=100'

(NOTE: LINE SIZES ARE FROM BEST AVAILABLE RECORDS.)

SUBSURFACE UTILITY ENGINEERING
TALLEY RD.
FROM WISEMAN BLVD TO FM 1957 (POTRANCO RD)
CP&Y, INC.
BEXAR COUNTY, TEXAS

HALFF
TBPE #F-312

DESIGN	DRAWN	DATE	SCALE	NOTES	FILE	NO.
HALFF	HALFF	SEPTEMBER 2015	1"=100'	31136	SH-03	03

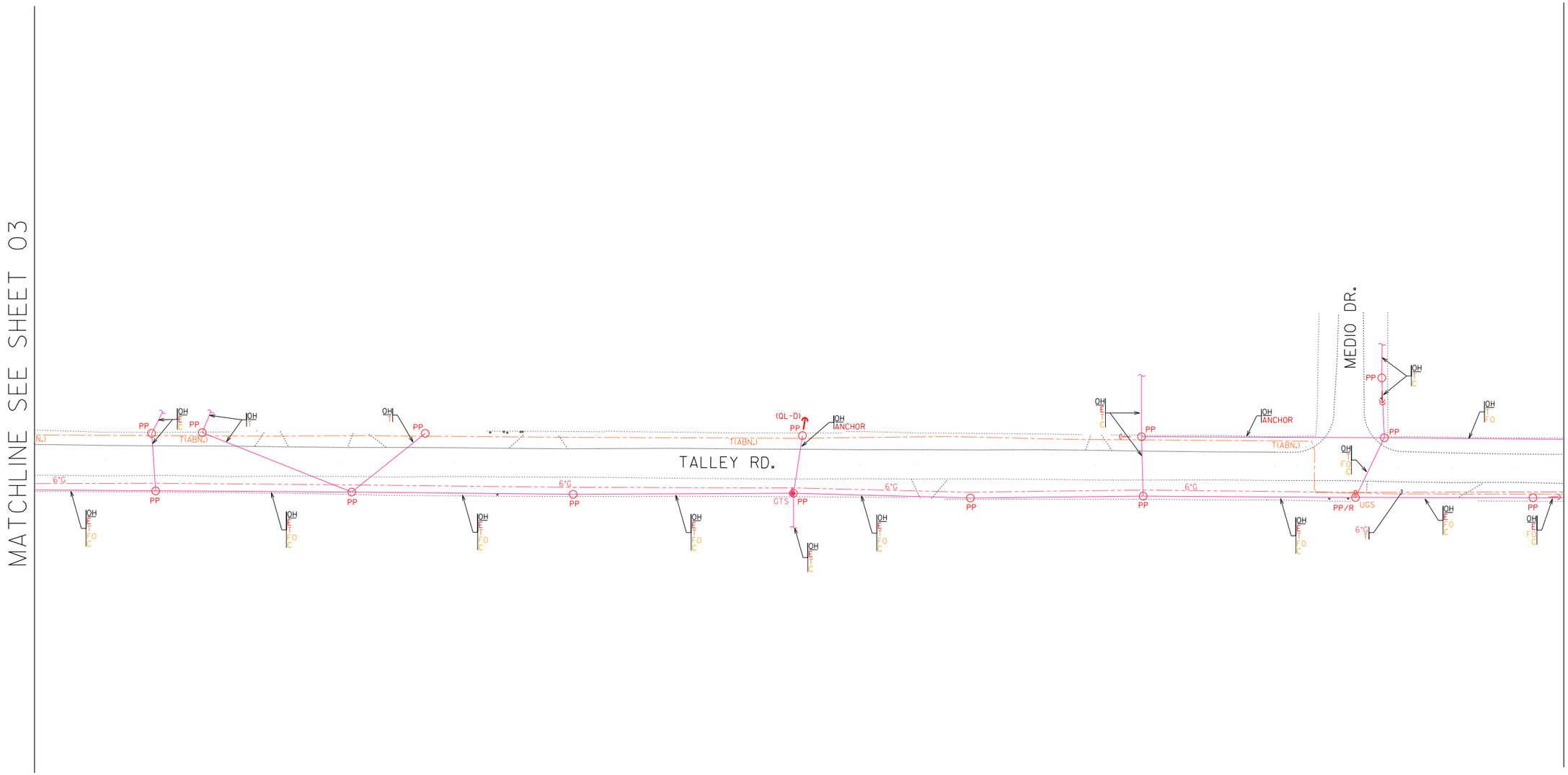

LEGEND:

LEVEL "A" LEVEL "B" LEVEL "C" & "D"

TEST HOLE
TELEPHONE LINE
FIBER OPTIC LINE
CABLE TELEVISION LINE
WATER LINE
WASTEWATER LINE
GAS LINE
ELECTRIC LINE
OVERHEAD UTILITY LINE

TPED TELEPHONE PEDESTAL
TMH TELEPHONE MANHOLE
TCAB TELEPHONE CABINET
UGS TELEPHONE SPLICE
FHH FIBER OPTIC HAND HOLE
FCAB FIBER OPTIC CABINET
CPED TELEVISION PEDESTAL
FH FIRE HYDRANT
WV WATER VALVE
WM WATER METER
WVP WATER VENT PIPE
GVLT GAS VAULT
GM GAS METER
GV GAS VALVE
GTS GAS TEST STATION
GVP GAS VENT PIPE
PP POWER POLE

PP/R POWER POLE W/RISER
EB ELECTRIC BOX
EM ELECTRIC METER
EPED ELECTRIC PEDESTAL
LP LIGHT POLE
GL GROUND LIGHT
TRANS ELECTRIC TRANSFORMER
TSP TRAFFIC SIGNAL POLE
TCB TRAFFIC CONTROL BOX
GUY WIRE
UTILITY CONTINUATION
UTILITY END POINT
ABN. ABANDONED UTILITY
(QL-B) QUALITY LEVEL B
(QL-C) QUALITY LEVEL C
(QL-D) QUALITY LEVEL D
OH OVERHEAD UTILITIES
CP CONTROL POINT

OWNERSHIP LEGEND:	OWNER:	CONTACT:	PHONE:
TELEPHONE(T)	= AT&T	PHILIP AUSTIN	210-283-1839
FIBER OPTIC CABLE(FO)	= AT&T	PHILIP AUSTIN	210-283-1839
CABLE TELEVISION(C)	= TIME WARNER CABLE	STEPHON ROBERTSON	210-352-4306
WATER(W)	= SAWS	DARYL SPILLMANN	210-233-3012
WASTEWATER(WW)	= SAWS	DARYL SPILLMANN	210-233-3012
GAS(G)	= CPS ENERGY	TOM NARENDORF	210-353-3766
ELECTRIC(E)	= CPS ENERGY	MIKE DENNING	210-353-2822
ELECTRIC(E1)	= BEXAR COUNTY	KURT FRANZ	210-631-0250

FIELD WORK BEGAN ON AUGUST 17, 2015 AND WAS COMPLETED AUGUST 28, 2015. HALFF ASSOCIATES EXPRESSLY DISCLAIMS RESPONSIBILITY FOR NEW UTILITY INSTALLATIONS, MODIFICATIONS OR ADJUSTMENTS TO EXISTING UTILITIES AFTER AUGUST 28, 2015.

ALL UTILITY INFORMATION HEREON IS DEPICTED TO QUALITY LEVEL "B" UNLESS OTHERWISE NOTED.

SIZE INFORMATION SHOWN HEREON IS TAKEN FROM AVAILABLE UTILITY RECORDS:

LEVEL "B" INFORMATION OBTAINED THROUGH THE APPLICATION OF APPROPRIATE SURFACE GEOPHYSICAL METHODS TO DETERMINE THE EXISTENCE AND APPROXIMATE HORIZONTAL POSITION OF UTILITIES.

LEVEL "C" DEPICTED ACCORDING TO RECORD INFORMATION AND EXISTING ASSOCIATED UTILITY STRUCTURES. NO ELECTRONIC INFORMATION WAS OBTAINED

LEVEL "D" DEPICTED ACCORDING TO RECORD INFORMATION. NO ELECTRONIC INFORMATION WAS OBTAINED.

UNLESS OTHERWISE NOTED, UTILITY LINE LIMITS DEPICTED REPRESENT FIELD DESIGNATING LIMITS AND NOT END POINTS OF UTILITIES.

UTILITY INFORMATION LABELED LEVEL "C" OR "D" IS DERIVED FROM FURNISHED RECORDS. SUCH INFORMATION MAY NOT BE ACCURATE OR RELIABLE. HALFF ASSOCIATES EXPRESSLY DISCLAIMS RESPONSIBILITY FOR THE ACCURACY OR RELIABILITY OF UTILITY INFORMATION DEPICTED ACCORDING TO RECORDS.

THE ROADWAY AND ROW FILES WERE PROVIDED TO HALFF BY OTHERS AND ARE SHOWN FOR REFERENCE PURPOSES ONLY.

STORM SEWER AND ASSOCIATED APPURTENANCES ARE NOT SHOWN ON THESE PLANS.

WASTEWATER FLOWLINE INFORMATION SHOWN HEREON ARE BASED ON FIELD MEASURED DEPTHS AND SHALL BE DEEMED APPROXIMATE.

HALFF ASSOCIATES, INC.
ENGINEERS - SURVEYORS - SCIENTISTS
PRELIMINARY - FOR INTERIM REVIEW ONLY
These documents are for Interim Review and not Intended for Regulatory Approval, Permit, Bidding, or Construction purposes. They were prepared by or under the supervision of:

Ryan D. Lewis	95767	9/18/2015
Type or Print Name	PE#	Date

0 25 50 75 100
SCALE: 1"=100'

(NOTE: LINE SIZES ARE FROM BEST AVAILABLE RECORDS.)

SUBSURFACE UTILITY ENGINEERING

TALLEY RD.
FROM WISEMAN BLVD TO FM 1957 (POTRANCO RD)

CP&Y, INC.

BEXAR COUNTY, TEXAS

HALFF
TBPE #F-312

DESIGN	DRAWN	DATE	SCALE	NOTES	FILE	NO.
HALFF	HALFF	SEPTEMBER 2015	1"=100'	31136	SH-04	04

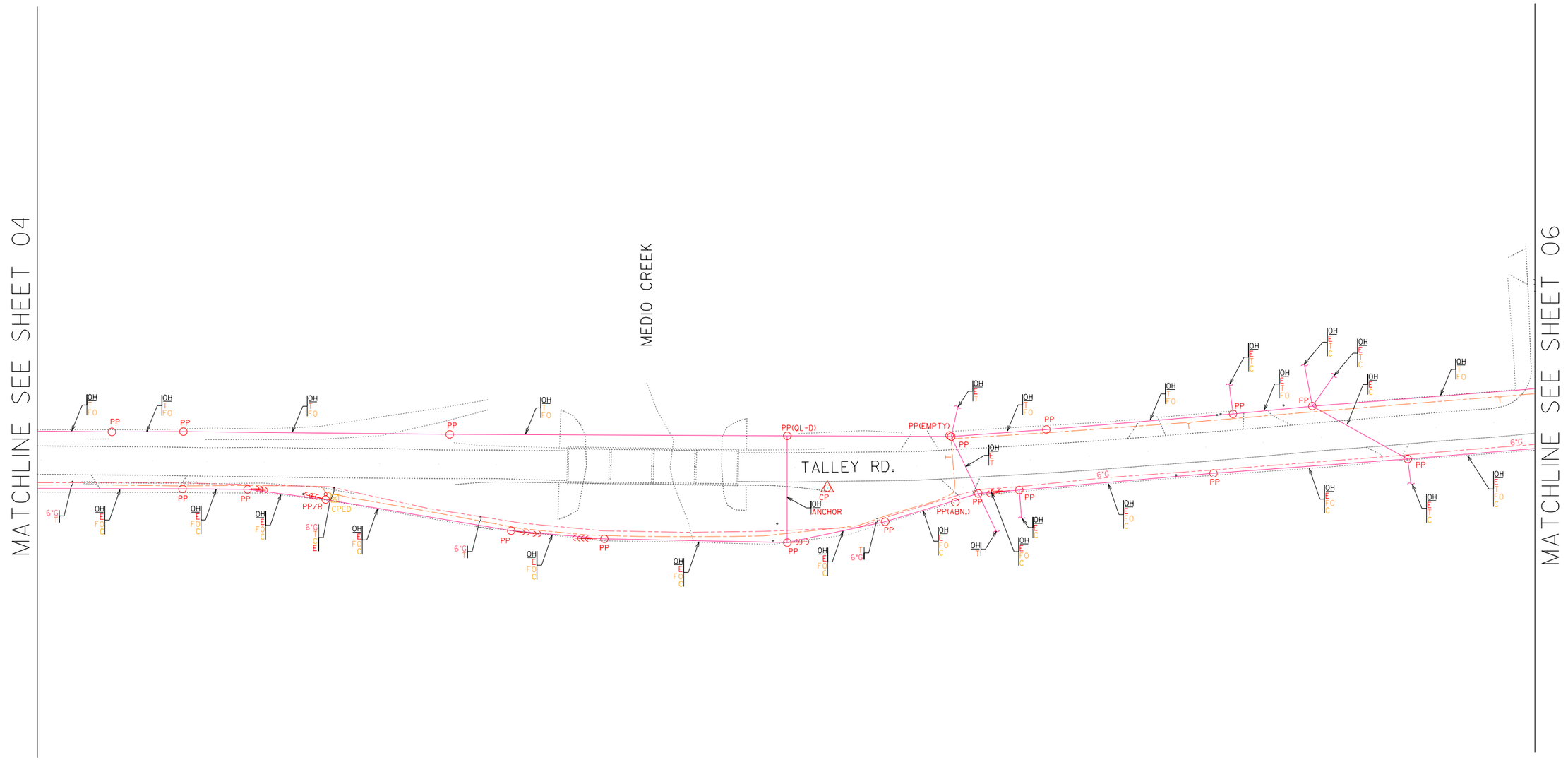

LEGEND:

LEVEL "A" LEVEL "B" LEVEL "C" & "D"

TEST HOLE
TELEPHONE LINE
FIBER OPTIC LINE
CABLE TELEVISION LINE
WATER LINE
WASTEWATER LINE
GAS LINE
ELECTRIC LINE
OVERHEAD UTILITY LINE

TPED TELEPHONE PEDESTAL
TMH TELEPHONE MANHOLE
TCAB TELEPHONE CABINET
UGS TELEPHONE SPLICE
FHH FIBER OPTIC HAND HOLE
FCAB FIBER OPTIC CABINET
CPED TELEVISION PEDESTAL
FH FIRE HYDRANT
WV WATER VALVE
WM WATER METER
WVP WATER VENT PIPE
GVLT GAS VAULT
GM GAS METER
GV GAS VALVE
GTS GAS TEST STATION
GVP GAS VENT PIPE
PP POWER POLE

PP/R POWER POLE W/RISER
EB ELECTRIC BOX
EM ELECTRIC METER
EPED ELECTRIC PEDESTAL
LP LIGHT POLE
GL GROUND LIGHT
TRANS ELECTRIC TRANSFORMER
TSP TRAFFIC SIGNAL POLE
TCB TRAFFIC CONTROL BOX
GUY WIRE
UTILITY CONTINUATION
UTILITY END POINT
ABN. ABANDONED UTILITY
(QL-B) QUALITY LEVEL B
(QL-C) QUALITY LEVEL C
(QL-D) QUALITY LEVEL D
OH OVERHEAD UTILITIES
CP CONTROL POINT

OWNERSHIP LEGEND:	OWNER:	CONTACT:	PHONE:
TELEPHONE(T)	= AT&T	PHILIP AUSTIN	210-283-1839
FIBER OPTIC CABLE(FO)	= AT&T	PHILIP AUSTIN	210-283-1839
CABLE TELEVISION(C)	= TIME WARNER CABLE	STEPHON ROBERTSON	210-352-4306
WATER(W)	= SAWS	DARYL SPILLMANN	210-233-3012
WASTEWATER(WW)	= SAWS	DARYL SPILLMANN	210-233-3012
GAS(G)	= CPS ENERGY	TOM NARENDORF	210-353-3766
ELECTRIC(E)	= CPS ENERGY	MIKE DENNING	210-353-2822
ELECTRIC(E1)	= BEXAR COUNTY	KURT FRANZ	210-631-0250

FIELD WORK BEGAN ON AUGUST 17, 2015 AND WAS COMPLETED AUGUST 28, 2015. HALFF ASSOCIATES EXPRESSLY DISCLAIMS RESPONSIBILITY FOR NEW UTILITY INSTALLATIONS, MODIFICATIONS OR ADJUSTMENTS TO EXISTING UTILITIES AFTER AUGUST 28, 2015.

ALL UTILITY INFORMATION HEREON IS DEPICTED TO QUALITY LEVEL "B" UNLESS OTHERWISE NOTED.

SIZE INFORMATION SHOWN HEREON IS TAKEN FROM AVAILABLE UTILITY RECORDS:

LEVEL "B" INFORMATION OBTAINED THROUGH THE APPLICATION OF APPROPRIATE SURFACE GEOPHYSICAL METHODS TO DETERMINE THE EXISTENCE AND APPROXIMATE HORIZONTAL POSITION OF UTILITIES.

LEVEL "C" DEPICTED ACCORDING TO RECORD INFORMATION AND EXISTING ASSOCIATED UTILITY STRUCTURES. NO ELECTRONIC INFORMATION WAS OBTAINED

LEVEL "D" DEPICTED ACCORDING TO RECORD INFORMATION. NO ELECTRONIC INFORMATION WAS OBTAINED.

UNLESS OTHERWISE NOTED, UTILITY LINE LIMITS DEPICTED REPRESENT FIELD DESIGNATING LIMITS AND NOT END POINTS OF UTILITIES.

UTILITY INFORMATION LABELED LEVEL "C" OR "D" IS DERIVED FROM FURNISHED RECORDS. SUCH INFORMATION MAY NOT BE ACCURATE OR RELIABLE. HALFF ASSOCIATES EXPRESSLY DISCLAIMS RESPONSIBILITY FOR THE ACCURACY OR RELIABILITY OF UTILITY INFORMATION DEPICTED ACCORDING TO RECORDS.

THE ROADWAY AND ROW FILES WERE PROVIDED TO HALFF BY OTHERS AND ARE SHOWN FOR REFERENCE PURPOSES ONLY.

STORM SEWER AND ASSOCIATED APPURTENANCES ARE NOT SHOWN ON THESE PLANS.

WASTEWATER FLOWLINE INFORMATION SHOWN HEREON ARE BASED ON FIELD MEASURED DEPTHS AND SHALL BE DEEMED APPROXIMATE.

HALFF ASSOCIATES, INC.
ENGINEERS - SURVEYORS - SCIENTISTS
PRELIMINARY - FOR INTERIM REVIEW ONLY
These documents are for Interim Review and not Intended for Regulatory Approval, Permit, Bidding, or Construction purposes. They were prepared by or under the supervision of:

Ryan D. Lewis	95767	9/18/2015
Type or Print Name	PE#	Date

0 25 50 75 100
SCALE: 1"=100'

(NOTE: LINE SIZES ARE FROM BEST AVAILABLE RECORDS.)

SUBSURFACE UTILITY ENGINEERING

TALLEY RD.
FROM WISEMAN BLVD TO FM 1957 (POTRANCO RD)

CP&Y, INC.

BEXAR COUNTY, TEXAS

HALFF
TBPE #F-312

DESIGN	DRAWN	DATE	SCALE	NOTES	FILE	NO.
HALFF	HALFF	SEPTEMBER 2015	1"=100'	31136	SH-05	05

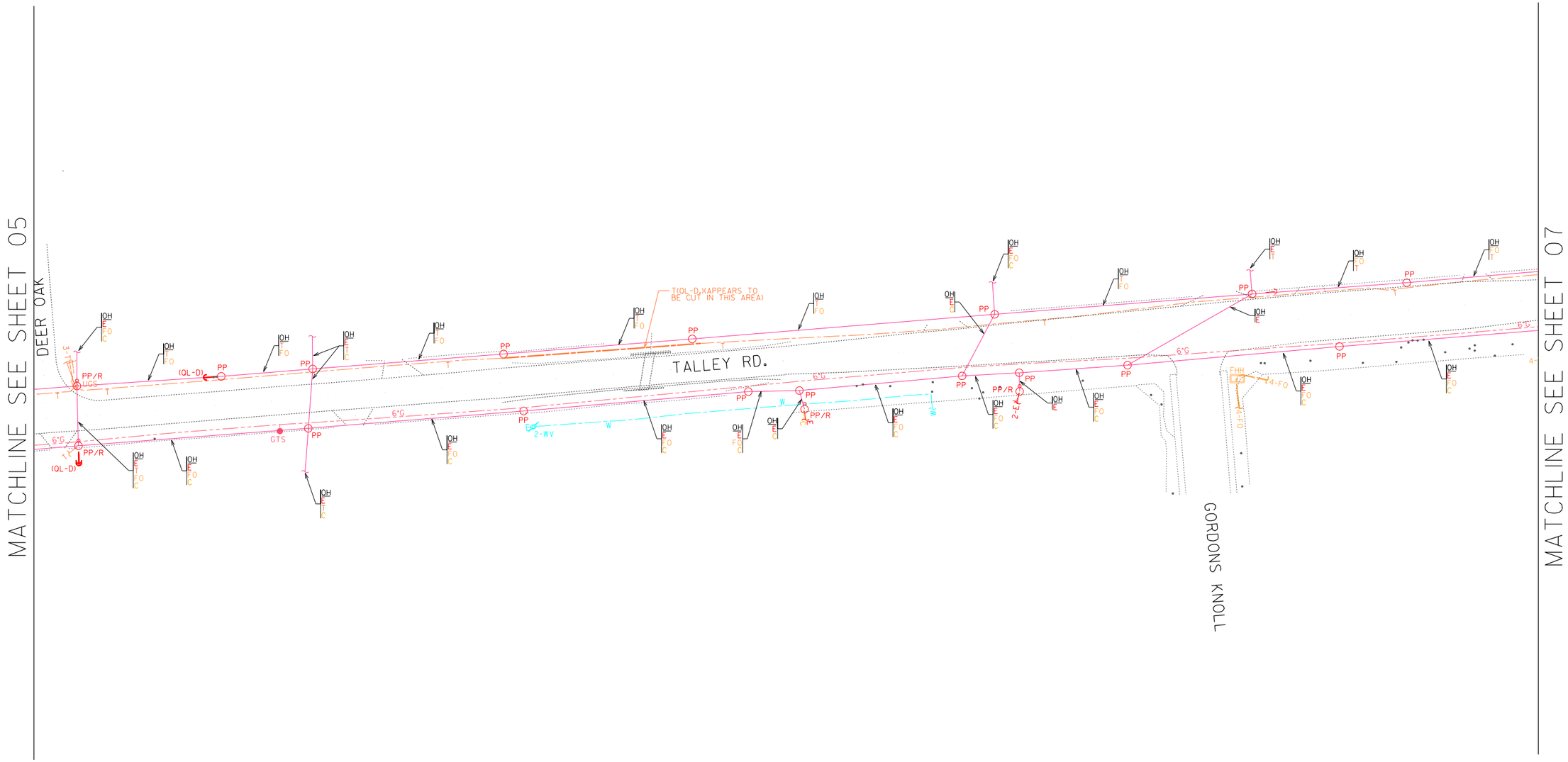

LEGEND:

LEVEL "A"	LEVEL "B"	LEVEL "C" & "D"	
			TEST HOLE
			TELEPHONE LINE
			FIBER OPTIC LINE
			CABLE TELEVISION LINE
			WATER LINE
			WASTEWATER LINE
			GAS LINE
			ELECTRIC LINE
			OVERHEAD UTILITY LINE

TPED	TELEPHONE PEDESTAL	PP/R	POWER POLE W/RISER
TMH	TELEPHONE MANHOLE	EB	ELECTRIC BOX
TCAB	TELEPHONE CABINET	EM	ELECTRIC METER
UGS	TELEPHONE SPLICE	EPED	ELECTRIC PEDESTAL
FHH	FIBER OPTIC HAND HOLE	LP	LIGHT POLE
FCAB	FIBER OPTIC CABINET	GL	GROUND LIGHT
CPED	TELEVISION PEDESTAL	TRANS	ELECTRIC TRANSFORMER
FH	FIRE HYDRANT	TSP	TRAFFIC SIGNAL POLE
WV	WATER VALVE	TCB	TRAFFIC CONTROL BOX
WM	WATER METER		GUY WIRE
WVP	WATER VENT PIPE		UTILITY CONTINUATION
GVLT	GAS VAULT		UTILITY END POINT
GM	GAS METER	ABN.	ABANDONED UTILITY
GV	GAS VALVE	(QL-B)	QUALITY LEVEL B
GTS	GAS TEST STATION	(QL-C)	QUALITY LEVEL C
GVP	GAS VENT PIPE	(QL-D)	QUALITY LEVEL D
PP	POWER POLE	OH	OVERHEAD UTILITIES
		CP	CONTROL POINT

OWNERSHIP LEGEND:	OWNER:	CONTACT:	PHONE:
TELEPHONE(T)	= AT&T	PHILIP AUSTIN	210-283-1839
FIBER OPTIC CABLE(FO)	= AT&T	PHILIP AUSTIN	210-283-1839
CABLE TELEVISION(C)	= TIME WARNER CABLE	STEPHON ROBERTSON	210-352-4306
WATER(W)	= SAWS	DARYL SPILLMANN	210-233-3012
WASTEWATER(WW)	= SAWS	DARYL SPILLMANN	210-233-3012
GAS(G)	= CPS ENERGY	TOM NARENDORF	210-353-3766
ELECTRIC(E)	= CPS ENERGY	MIKE DENNING	210-353-2822
ELECTRIC(E1)	= BEXAR COUNTY	KURT FRANZ	210-631-0250

FIELD WORK BEGAN ON AUGUST 17, 2015 AND WAS COMPLETED AUGUST 28, 2015. HALFF ASSOCIATES EXPRESSLY DISCLAIMS RESPONSIBILITY FOR NEW UTILITY INSTALLATIONS, MODIFICATIONS OR ADJUSTMENTS TO EXISTING UTILITIES AFTER AUGUST 28, 2015.

ALL UTILITY INFORMATION HEREON IS DEPICTED TO QUALITY LEVEL "B" UNLESS OTHERWISE NOTED.

SIZE INFORMATION SHOWN HEREON IS TAKEN FROM AVAILABLE UTILITY RECORDS:

LEVEL "B" INFORMATION OBTAINED THROUGH THE APPLICATION OF APPROPRIATE SURFACE GEOPHYSICAL METHODS TO DETERMINE THE EXISTENCE AND APPROXIMATE HORIZONTAL POSITION OF UTILITIES.

LEVEL "C" DEPICTED ACCORDING TO RECORD INFORMATION AND EXISTING ASSOCIATED UTILITY STRUCTURES. NO ELECTRONIC INFORMATION WAS OBTAINED

LEVEL "D" DEPICTED ACCORDING TO RECORD INFORMATION. NO ELECTRONIC INFORMATION WAS OBTAINED.

UNLESS OTHERWISE NOTED, UTILITY LINE LIMITS DEPICTED REPRESENT FIELD DESIGNATING LIMITS AND NOT END POINTS OF UTILITIES.

UTILITY INFORMATION LABELED LEVEL "C" OR "D" IS DERIVED FROM FURNISHED RECORDS. SUCH INFORMATION MAY NOT BE ACCURATE OR RELIABLE. HALFF ASSOCIATES EXPRESSLY DISCLAIMS RESPONSIBILITY FOR THE ACCURACY OR RELIABILITY OF UTILITY INFORMATION DEPICTED ACCORDING TO RECORDS.

THE ROADWAY AND ROW FILES WERE PROVIDED TO HALFF BY OTHERS AND ARE SHOWN FOR REFERENCE PURPOSES ONLY.

STORM SEWER AND ASSOCIATED APPURTENANCES ARE NOT SHOWN ON THESE PLANS.

WASTEWATER FLOWLINE INFORMATION SHOWN HEREON ARE BASED ON FIELD MEASURED DEPTHS AND SHALL BE DEEMED APPROXIMATE.

HALFF ASSOCIATES, INC.
ENGINEERS - SURVEYORS - SCIENTISTS
PRELIMINARY - FOR INTERIM REVIEW ONLY
These documents are for Interim Review and not Intended for Regulatory Approval, Permit, Bidding, or Construction purposes. They were prepared by or under the supervision of:

Ryan D. Lewis	95767	9/18/2015
Type or Print Name	PE#	Date

0 25 50 75 100
SCALE: 1"=100'

(NOTE: LINE SIZES ARE FROM BEST AVAILABLE RECORDS.)

SUBSURFACE UTILITY ENGINEERING

TALLEY RD.
FROM WISEMAN BLVD TO FM 1957 (POTRANCO RD)

CP&Y, INC.

BEXAR COUNTY, TEXAS

HALFF
TBPE #F-312

DESIGN	DRAWN	DATE	SCALE	NOTES	FILE	NO.
HALFF	HALFF	SEPTEMBER 2015	1"=100'	31136	SH-06	06

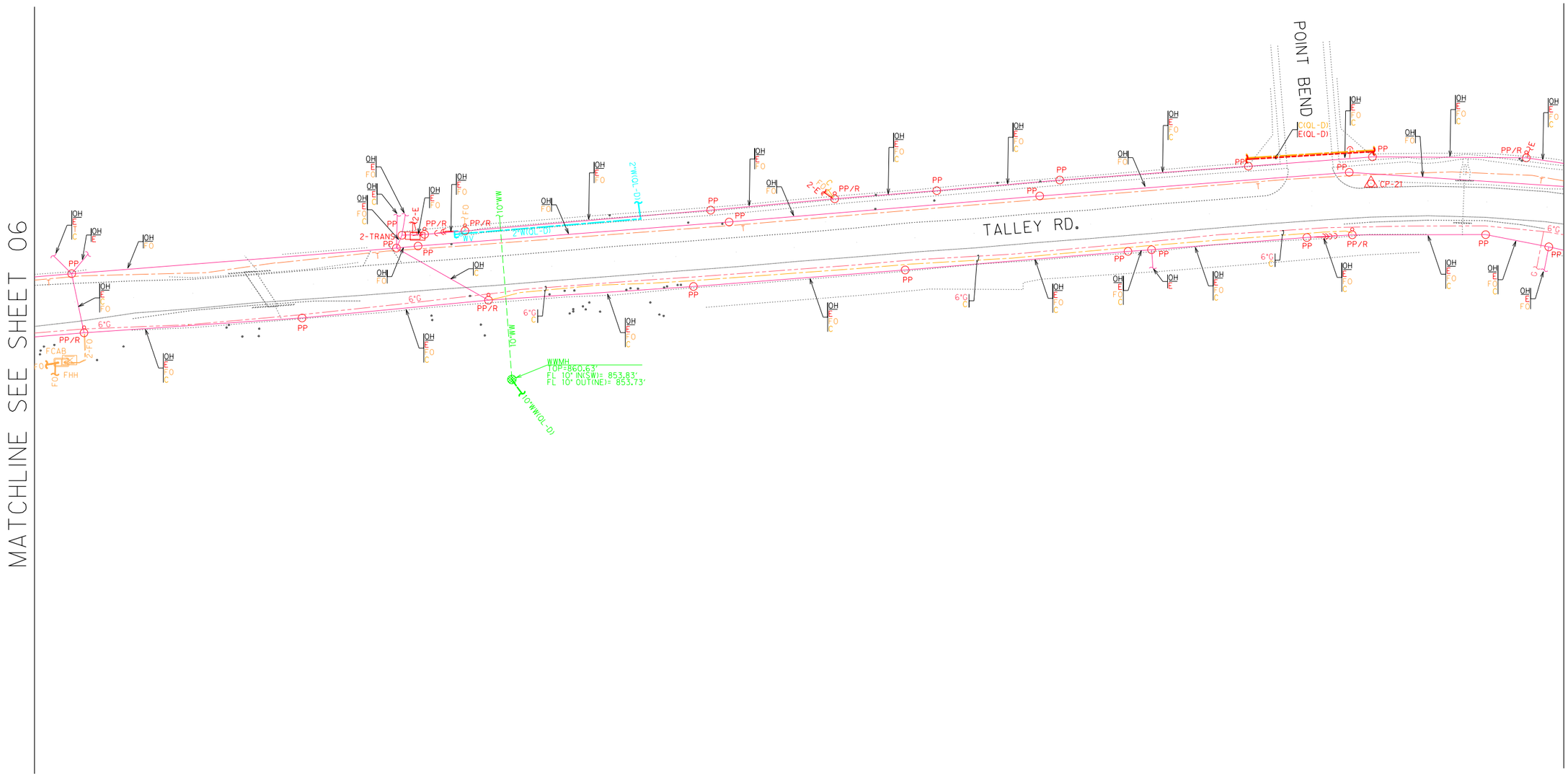

LEGEND:

LEVEL "A" LEVEL "B" LEVEL "C" & "D"

TEST HOLE
TELEPHONE LINE
FIBER OPTIC LINE
CABLE TELEVISION LINE
WATER LINE
WASTEWATER LINE
GAS LINE
ELECTRIC LINE
OVERHEAD UTILITY LINE

TPED TELEPHONE PEDESTAL
TMH TELEPHONE MANHOLE
TCAB TELEPHONE CABINET
UGS TELEPHONE SPLICE
FHH FIBER OPTIC HAND HOLE
FCAB FIBER OPTIC CABINET
CPED TELEVISION PEDESTAL
FH FIRE HYDRANT
WV WATER VALVE
WM WATER METER
WVP WATER VENT PIPE
GVLT GAS VAULT
GM GAS METER
GV GAS VALVE
GTS GAS TEST STATION
GVP GAS VENT PIPE
PP POWER POLE

PP/R POWER POLE W/RISER
EB ELECTRIC BOX
EM ELECTRIC METER
EPED ELECTRIC PEDESTAL
LP LIGHT POLE
GL GROUND LIGHT
TRANS ELECTRIC TRANSFORMER
TSP TRAFFIC SIGNAL POLE
TCB TRAFFIC CONTROL BOX
GUY WIRE
UTILITY CONTINUATION
UTILITY END POINT
ABN. ABANDONED UTILITY
(QL-B) QUALITY LEVEL B
(QL-C) QUALITY LEVEL C
(QL-D) QUALITY LEVEL D
OH OVERHEAD UTILITIES
CP CONTROL POINT

OWNERSHIP LEGEND:	OWNER:	CONTACT:	PHONE:
TELEPHONE(T)	= AT&T	PHILIP AUSTIN	210-283-1839
FIBER OPTIC CABLE(FO)	= AT&T	PHILIP AUSTIN	210-283-1839
CABLE TELEVISION(C)	= TIME WARNER CABLE	STEPHON ROBERTSON	210-352-4306
WATER(W)	= SAWS	DARYL SPILLMANN	210-233-3012
WASTEWATER(WW)	= SAWS	DARYL SPILLMANN	210-233-3012
GAS(G)	= CPS ENERGY	TOM NARENDORF	210-353-3766
ELECTRIC(E)	= CPS ENERGY	MIKE DENNING	210-353-2822
ELECTRIC(E1)	= BEXAR COUNTY	KURT FRANZ	210-631-0250

FIELD WORK BEGAN ON AUGUST 17, 2015 AND WAS COMPLETED AUGUST 28, 2015. HALFF ASSOCIATES EXPRESSLY DISCLAIMS RESPONSIBILITY FOR NEW UTILITY INSTALLATIONS, MODIFICATIONS OR ADJUSTMENTS TO EXISTING UTILITIES AFTER AUGUST 28, 2015.

ALL UTILITY INFORMATION HEREON IS DEPICTED TO QUALITY LEVEL "B" UNLESS OTHERWISE NOTED.

SIZE INFORMATION SHOWN HEREON IS TAKEN FROM AVAILABLE UTILITY RECORDS:

LEVEL "B" INFORMATION OBTAINED THROUGH THE APPLICATION OF APPROPRIATE SURFACE GEOPHYSICAL METHODS TO DETERMINE THE EXISTENCE AND APPROXIMATE HORIZONTAL POSITION OF UTILITIES.

LEVEL "C" DEPICTED ACCORDING TO RECORD INFORMATION AND EXISTING ASSOCIATED UTILITY STRUCTURES. NO ELECTRONIC INFORMATION WAS OBTAINED

LEVEL "D" DEPICTED ACCORDING TO RECORD INFORMATION. NO ELECTRONIC INFORMATION WAS OBTAINED.

UNLESS OTHERWISE NOTED, UTILITY LINE LIMITS DEPICTED REPRESENT FIELD DESIGNATING LIMITS AND NOT END POINTS OF UTILITIES.

UTILITY INFORMATION LABELED LEVEL "C" OR "D" IS DERIVED FROM FURNISHED RECORDS. SUCH INFORMATION MAY NOT BE ACCURATE OR RELIABLE. HALFF ASSOCIATES EXPRESSLY DISCLAIMS RESPONSIBILITY FOR THE ACCURACY OR RELIABILITY OF UTILITY INFORMATION DEPICTED ACCORDING TO RECORDS.

THE ROADWAY AND ROW FILES WERE PROVIDED TO HALFF BY OTHERS AND ARE SHOWN FOR REFERENCE PURPOSES ONLY.

STORM SEWER AND ASSOCIATED APPURTENANCES ARE NOT SHOWN ON THESE PLANS.

WASTEWATER FLOWLINE INFORMATION SHOWN HEREON ARE BASED ON FIELD MEASURED DEPTHS AND SHALL BE DEEMED APPROXIMATE.

HALFF ASSOCIATES, INC.
ENGINEERS - SURVEYORS - SCIENTISTS
PRELIMINARY - FOR INTERIM REVIEW ONLY
These documents are for Interim Review and not Intended for Regulatory Approval, Permit, Bidding, or Construction purposes. They were prepared by or under the supervision of:

Ryan D. Lewis *95767* *9/18/2015*
Type or Print Name PE# Date

0 25 50 75 100
SCALE: 1"=100'

(NOTE: LINE SIZES ARE FROM BEST AVAILABLE RECORDS.)

SUBSURFACE UTILITY ENGINEERING
TALLEY RD.
FROM WISEMAN BLVD TO FM 1957 (POTRANCO RD)
CP&Y, INC.
BEXAR COUNTY, TEXAS

HALFF
TBPE #F-312

DESIGN	DRAWN	DATE	SCALE	NOTES	FILE	NO.
HALFF	HALFF	SEPTEMBER 2015	1"=100'	31136	SH-07	07

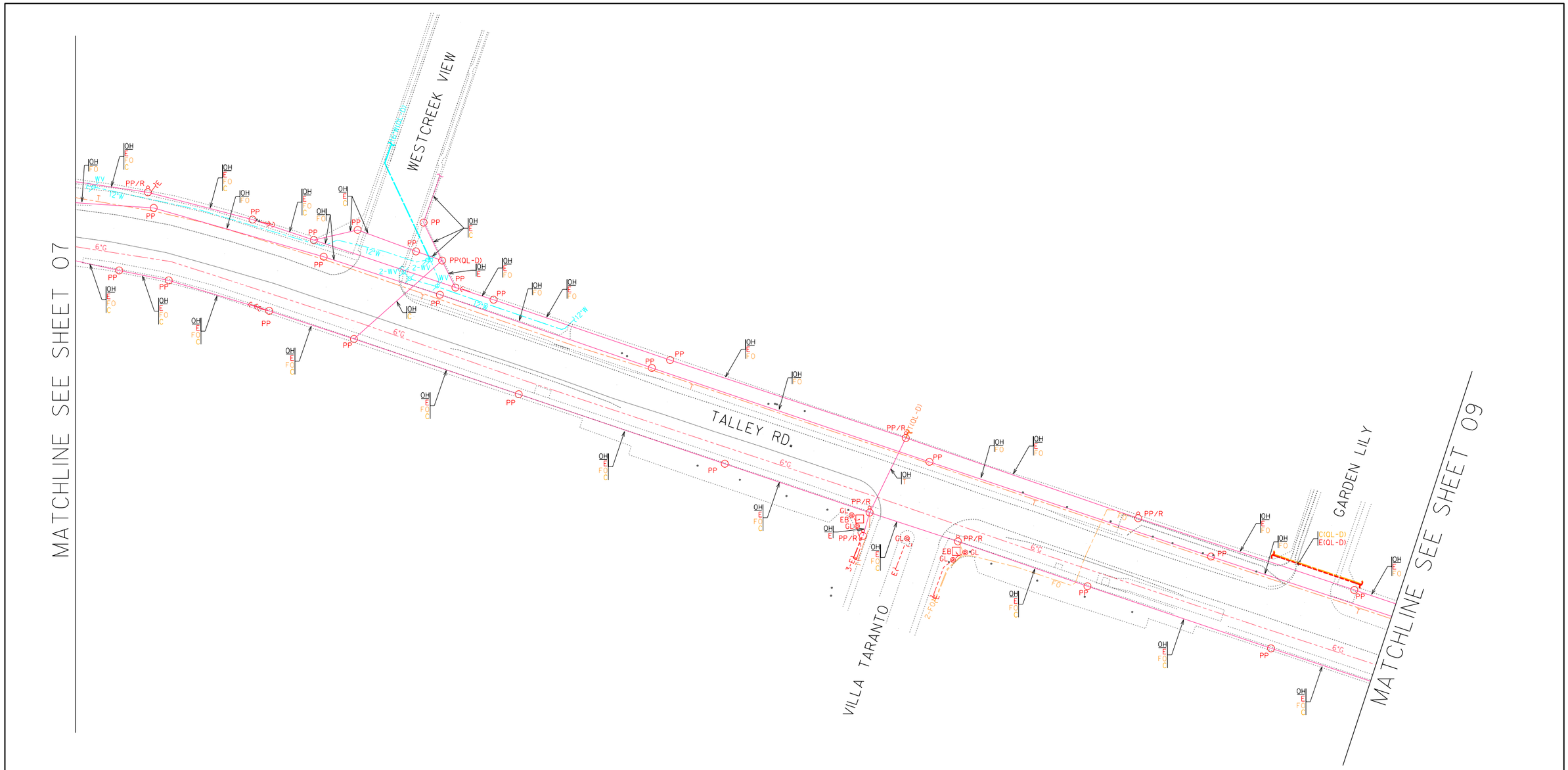

LEGEND:

LEVEL "A"	LEVEL "B"	LEVEL "C" & "D"	
			TEST HOLE
			TELEPHONE LINE
			FIBER OPTIC LINE
			CABLE TELEVISION LINE
			WATER LINE
			WASTEWATER LINE
			GAS LINE
			ELECTRIC LINE
			OVERHEAD UTILITY LINE

TPED	TELEPHONE PEDESTAL	PP/R	POWER POLE W/RISER
TMH	TELEPHONE MANHOLE	EB	ELECTRIC BOX
TCAB	TELEPHONE CABINET	EM	ELECTRIC METER
UGS	TELEPHONE SPLICE	EPED	ELECTRIC PEDESTAL
FHH	FIBER OPTIC HAND HOLE	LP	LIGHT POLE
FCAB	FIBER OPTIC CABINET	GL	GROUND LIGHT
CPED	TELEVISION PEDESTAL	TRANS	ELECTRIC TRANSFORMER
FH	FIRE HYDRANT	TSP	TRAFFIC SIGNAL POLE
WV	WATER VALVE	TCB	TRAFFIC CONTROL BOX
WM	WATER METER		GUY WIRE
WVP	WATER VENT PIPE		UTILITY CONTINUATION
GVLT	GAS VAULT		UTILITY END POINT
GM	GAS METER	ABN.	ABANDONED UTILITY
GV	GAS VALVE	(QL-B)	QUALITY LEVEL B
GTS	GAS TEST STATION	(QL-C)	QUALITY LEVEL C
GVP	GAS VENT PIPE	(QL-D)	QUALITY LEVEL D
PP	POWER POLE	OH	OVERHEAD UTILITIES
		CP	CONTROL POINT

OWNERSHIP LEGEND:	OWNER:	CONTACT:	PHONE:
TELEPHONE(T)	= AT&T	PHILIP AUSTIN	210-283-1839
FIBER OPTIC CABLE(FO)	= AT&T	PHILIP AUSTIN	210-283-1839
CABLE TELEVISION(C)	= TIME WARNER CABLE	STEPHON ROBERTSON	210-352-4306
WATER(W)	= SAWS	DARYL SPILLMANN	210-233-3012
WASTEWATER(WW)	= SAWS	DARYL SPILLMANN	210-233-3012
GAS(G)	= CPS ENERGY	TOM NARENDORF	210-353-3766
ELECTRIC(E)	= CPS ENERGY	MIKE DENNING	210-353-2822
ELECTRIC(E1)	= BEXAR COUNTY	KURT FRANZ	210-631-0250

FIELD WORK BEGAN ON AUGUST 17, 2015 AND WAS COMPLETED AUGUST 28, 2015. HALFF ASSOCIATES EXPRESSLY DISCLAIMS RESPONSIBILITY FOR NEW UTILITY INSTALLATIONS, MODIFICATIONS OR ADJUSTMENTS TO EXISTING UTILITIES AFTER AUGUST 28, 2015.

ALL UTILITY INFORMATION HEREON IS DEPICTED TO QUALITY LEVEL "B" UNLESS OTHERWISE NOTED.

SIZE INFORMATION SHOWN HEREON IS TAKEN FROM AVAILABLE UTILITY RECORDS:

LEVEL "B" INFORMATION OBTAINED THROUGH THE APPLICATION OF APPROPRIATE SURFACE GEOPHYSICAL METHODS TO DETERMINE THE EXISTENCE AND APPROXIMATE HORIZONTAL POSITION OF UTILITIES.

LEVEL "C" DEPICTED ACCORDING TO RECORD INFORMATION AND EXISTING ASSOCIATED UTILITY STRUCTURES. NO ELECTRONIC INFORMATION WAS OBTAINED

LEVEL "D" DEPICTED ACCORDING TO RECORD INFORMATION. NO ELECTRONIC INFORMATION WAS OBTAINED.

UNLESS OTHERWISE NOTED, UTILITY LINE LIMITS DEPICTED REPRESENT FIELD DESIGNATING LIMITS AND NOT END POINTS OF UTILITIES.

UTILITY INFORMATION LABELED LEVEL "C" OR "D" IS DERIVED FROM FURNISHED RECORDS. SUCH INFORMATION MAY NOT BE ACCURATE OR RELIABLE. HALFF ASSOCIATES EXPRESSLY DISCLAIMS RESPONSIBILITY FOR THE ACCURACY OR RELIABILITY OF UTILITY INFORMATION DEPICTED ACCORDING TO RECORDS.

THE ROADWAY AND ROW FILES WERE PROVIDED TO HALFF BY OTHERS AND ARE SHOWN FOR REFERENCE PURPOSES ONLY.

STORM SEWER AND ASSOCIATED APPURTENANCES ARE NOT SHOWN ON THESE PLANS.

WASTEWATER FLOWLINE INFORMATION SHOWN HEREON ARE BASED ON FIELD MEASURED DEPTHS AND SHALL BE DEEMED APPROXIMATE.

HALFF ASSOCIATES, INC.
ENGINEERS - SURVEYORS - SCIENTISTS
PRELIMINARY - FOR INTERIM REVIEW ONLY
These documents are for Interim Review and not Intended for Regulatory Approval, Permit, Bidding, or Construction purposes. They were prepared by or under the supervision of:

Ryan D. Lewis	95767	9/18/2015
Type or Print Name	PE#	Date

0 25 50 75 100
SCALE: 1"=100'

(NOTE: LINE SIZES ARE FROM BEST AVAILABLE RECORDS.)

SUBSURFACE UTILITY ENGINEERING

TALLEY RD.
FROM WISEMAN BLVD TO FM 1957 (POTRANCO RD)

CP&Y, INC.

BEXAR COUNTY, TEXAS

HALFF
TBPE #F-312

DESIGN	DRAWN	DATE	SCALE	NOTES	FILE	NO.
HALFF	HALFF	SEPTEMBER 2015	1"=100'	31136	SH-08	08

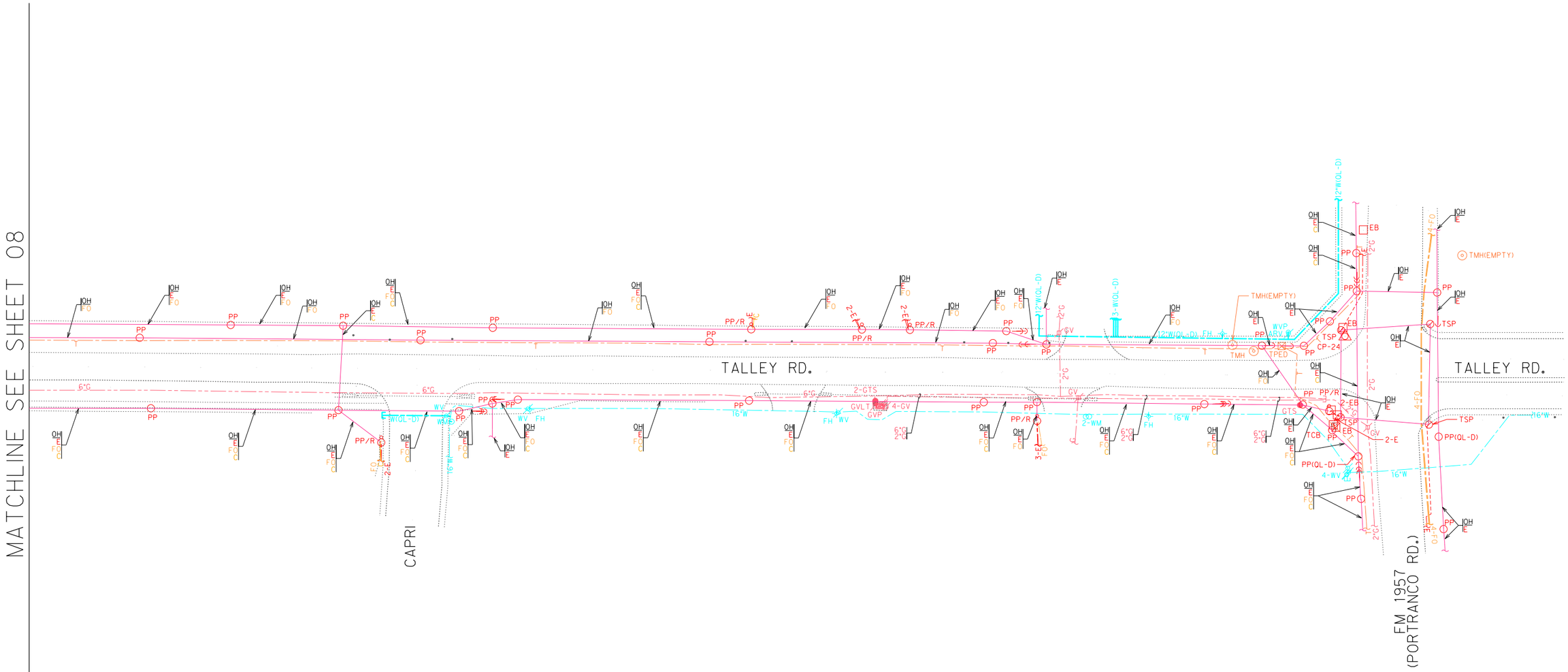

LEGEND:

LEVEL "A"	LEVEL "B"	LEVEL "C" & "D"	
			TEST HOLE
			TELEPHONE LINE
			FIBER OPTIC LINE
			CABLE TELEVISION LINE
			WATER LINE
			WASTEWATER LINE
			GAS LINE
			ELECTRIC LINE
			OVERHEAD UTILITY LINE

TPED	TELEPHONE PEDESTAL	PP/R	POWER POLE W/RISER
TMH	TELEPHONE MANHOLE	EB	ELECTRIC BOX
TCAB	TELEPHONE CABINET	EM	ELECTRIC METER
UGS	TELEPHONE SPLICE	EPED	ELECTRIC PEDESTAL
FHH	FIBER OPTIC HAND HOLE	LP	LIGHT POLE
FCAB	FIBER OPTIC CABINET	GL	GROUND LIGHT
CPED	TELEVISION PEDESTAL	TRANS	ELECTRIC TRANSFORMER
FH	FIRE HYDRANT	TSP	TRAFFIC SIGNAL POLE
WV	WATER VALVE	TCB	TRAFFIC CONTROL BOX
WM	WATER METER		GUY WIRE
WVP	WATER VENT PIPE		UTILITY CONTINUATION
GVLT	GAS VAULT		UTILITY END POINT
GM	GAS METER	ABN.	ABANDONED UTILITY
GV	GAS VALVE	(QL-B)	QUALITY LEVEL B
GTS	GAS TEST STATION	(QL-C)	QUALITY LEVEL C
GVP	GAS VENT PIPE	(QL-D)	QUALITY LEVEL D
PP	POWER POLE	OH	OVERHEAD UTILITIES
		CP	CONTROL POINT

OWNERSHIP LEGEND:	OWNER:	CONTACT:	PHONE:
TELEPHONE(T)	= AT&T	PHILIP AUSTIN	210-283-1839
FIBER OPTIC CABLE(FO)	= AT&T	PHILIP AUSTIN	210-283-1839
CABLE TELEVISION(C)	= TIME WARNER CABLE	STEPHON ROBERTSON	210-352-4306
WATER(W)	= SAWS	DARYL SPILLMANN	210-233-3012
WASTEWATER(WW)	= SAWS	DARYL SPILLMANN	210-233-3012
GAS(G)	= CPS ENERGY	TOM NARENDORF	210-353-3766
ELECTRIC(E)	= CPS ENERGY	MIKE DENNING	210-353-2822
ELECTRIC(E1)	= BEXAR COUNTY	KURT FRANZ	210-631-0250

FIELD WORK BEGAN ON AUGUST 17, 2015 AND WAS COMPLETED AUGUST 28, 2015. HALFF ASSOCIATES EXPRESSLY DISCLAIMS RESPONSIBILITY FOR NEW UTILITY INSTALLATIONS, MODIFICATIONS OR ADJUSTMENTS TO EXISTING UTILITIES AFTER AUGUST 28, 2015.

ALL UTILITY INFORMATION HEREON IS DEPICTED TO QUALITY LEVEL "B" UNLESS OTHERWISE NOTED.

SIZE INFORMATION SHOWN HEREON IS TAKEN FROM AVAILABLE UTILITY RECORDS:

LEVEL "B" INFORMATION OBTAINED THROUGH THE APPLICATION OF APPROPRIATE SURFACE GEOPHYSICAL METHODS TO DETERMINE THE EXISTENCE AND APPROXIMATE HORIZONTAL POSITION OF UTILITIES.

LEVEL "C" DEPICTED ACCORDING TO RECORD INFORMATION AND EXISTING ASSOCIATED UTILITY STRUCTURES. NO ELECTRONIC INFORMATION WAS OBTAINED

LEVEL "D" DEPICTED ACCORDING TO RECORD INFORMATION. NO ELECTRONIC INFORMATION WAS OBTAINED.

UNLESS OTHERWISE NOTED, UTILITY LINE LIMITS DEPICTED REPRESENT FIELD DESIGNATING LIMITS AND NOT END POINTS OF UTILITIES.

UTILITY INFORMATION LABELED LEVEL "C" OR "D" IS DERIVED FROM FURNISHED RECORDS. SUCH INFORMATION MAY NOT BE ACCURATE OR RELIABLE. HALFF ASSOCIATES EXPRESSLY DISCLAIMS RESPONSIBILITY FOR THE ACCURACY OR RELIABILITY OF UTILITY INFORMATION DEPICTED ACCORDING TO RECORDS.

THE ROADWAY AND ROW FILES WERE PROVIDED TO HALFF BY OTHERS AND ARE SHOWN FOR REFERENCE PURPOSES ONLY.

STORM SEWER AND ASSOCIATED APPURTENANCES ARE NOT SHOWN ON THESE PLANS.

WASTEWATER FLOWLINE INFORMATION SHOWN HEREON ARE BASED ON FIELD MEASURED DEPTHS AND SHALL BE DEEMED APPROXIMATE.

HALFF ASSOCIATES, INC.
ENGINEERS - SURVEYORS - SCIENTISTS
PRELIMINARY - FOR INTERIM REVIEW ONLY
These documents are for Interim Review and not Intended for Regulatory Approval, Permit, Bidding, or Construction purposes. They were prepared by or under the supervision of:

Ryan D. Lewis	95767	9/18/2015
Type or Print Name	PE#	Date

0 25 50 75 100
SCALE: 1"=100'

(NOTE: LINE SIZES ARE FROM BEST AVAILABLE RECORDS.)

SUBSURFACE UTILITY ENGINEERING

TALLEY RD.
FROM WISEMAN BLVD TO FM 1957 (POTRANCO RD)

CP&Y, INC.

BEXAR COUNTY, TEXAS

HALFF
TBPE #F-312

DESIGN	DRAWN	DATE	SCALE	NOTES	FILE	NO.
HALFF	HALFF	SEPTEMBER 2015	1"=100'	31136	SH-09	09

SAN ANTONIO WATER SYSTEM

WATER JOB NO: 16-5020

TALLEY ROAD PHASE 1 WATER PLANS

70% SUBMITTAL

THIS DOCUMENT IS RELEASED FOR THE PURPOSE OF INTERIM REVIEW UNDER THE AUTHORITY OF
Michael Persyn, P.E.
96583
2/17/2017
THIS DOCUMENT IS NOT INTENDED FOR BIDDING, PERMITTING AND/OR CONSTRUCTION PURPOSES

70% SUBMITTAL

SUBMITTAL PREPARED BY:

K. FRIESE + ASSOCIATES
PUBLIC PROJECT ENGINEERING

16170 Jones Maltsberger Road
Suite 109
San Antonio, Texas 78247
P - 512.338.1704 F - 512.338.1784
TBPE Firm #6535 www.kfriese.com

PROJECT LOCATION

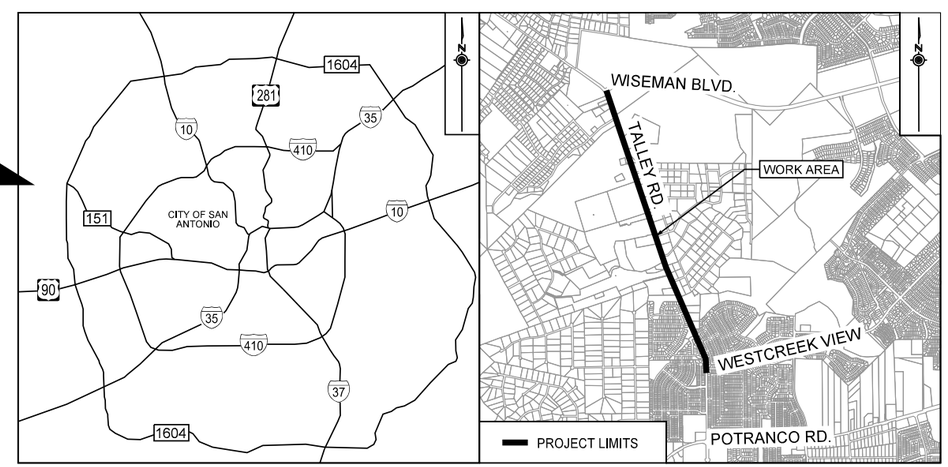

LOCATION MAP
NOT TO SCALE

SHEET LIST

SHT. NO	DESCRIPTION
1	COVER SHEET
2	GENERAL NOTES AND QUANTITIES
3	QUANTITIES BY SHEET
4	PROJECT LAYOUT
5	WATERLINE A - PLAN AND PROFILE BEGIN TO STA 5+00
6	WATERLINE A - PLAN AND PROFILE STA 5+00 TO STA 9+00
7	WATERLINE A - PLAN AND PROFILE STA 9+00 TO STA 13+00
8	WATERLINE A - PLAN AND PROFILE STA 13+00 TO STA 17+00
9	WATERLINE A - PLAN AND PROFILE STA 17+00 TO STA 21+00
10	WATERLINE A - PLAN AND PROFILE STA 21+00 TO STA 25+00
11	WATERLINE A - PLAN AND PROFILE STA 25+00 TO STA 29+00
12	WATERLINE A - PLAN AND PROFILE STA 29+00 TO STA 33+00
13	WATERLINE A - PLAN AND PROFILE STA 33+00 TO STA 37+00
14	WATERLINE A - PLAN AND PROFILE STA 37+00 TO STA 41+00
15	WATERLINE A - PLAN AND PROFILE STA 41+00 TO STA 45+00
16	WATERLINE A - PLAN AND PROFILE STA 45+00 TO STA 49+00
17	WATERLINE A - PLAN AND PROFILE STA 49+00 TO STA 53+00
18	WATERLINE A - PLAN AND PROFILE STA 53+00 TO STA 57+00
19	WATERLINE A - PLAN AND PROFILE STA 57+00 TO STA 61+00
20	WATERLINE A - PLAN AND PROFILE STA 61+00 TO STA 65+00
21	WATERLINE A - PLAN AND PROFILE STA 65+00 TO STA 69+00
22	WATERLINE A - PLAN AND PROFILE STA 69+00 TO STA 73+00
23	WATERLINE A - PLAN AND PROFILE STA 73+00 TO STA 77+00
24	WATERLINE A - PLAN AND PROFILE STA 77+00 TO STA 81+00
25	WATERLINE A - PLAN AND PROFILE STA 81+00 TO STA 85+00
26	WATERLINE A - PLAN AND PROFILE STA 85+00 TO STA 89+00
27	WATERLINE A - PLAN AND PROFILE STA 89+00 TO STA 93+00
28	WATERLINE A - PLAN AND PROFILE STA 93+00 TO STA 97+00
29	WATERLINE A - PLAN AND PROFILE STA 97+00 TO END
30	WATERLINE B - PLAN AND PROFILE BEGIN TO 5+00
31	WATERLINE B - PLAN AND PROFILE STA 5+00 TO END

FEBRUARY 2017

GENERAL WATER NOTES

1. ALL MATERIALS AND CONSTRUCTION PROCEDURES WITHIN THE SCOPE OF THIS CONTRACT SHALL BE APPROVED BY THE SAN ANTONIO WATER SYSTEM (SAWS) AND COMPLY WITH THE PLANS, SPECIFICATIONS, GENERAL CONDITIONS AND WITH THE FOLLOWING AS APPLICABLE:
   A. CURRENT TEXAS COMMISSION ON ENVIRONMENTAL QUALITY (TCEQ) "DESIGN CRITERIA FOR DOMESTIC WASTEWATER SYSTEM", TEXAS ADMINISTRATIVE CODE (TAC) TITLE 30 PART 1 CHAPTER 217 AND "PUBLIC DRINKING WATER", TAC TITLE 30 PART 1 CHAPTER 290.
   B. CURRENT TXDOT "STANDARD SPECIFICATIONS FOR CONSTRUCTION OF HIGHWAYS, STREETS AND DRAINAGE."
   C. CURRENT "SAN ANTONIO WATER SYSTEM STANDARD SPECIFICATIONS FOR WATER AND SANITARY SEWER CONSTRUCTION."
   D. CURRENT CITY OF SAN ANTONIO "STANDARD SPECIFICATIONS FOR PUBLIC WORKS CONSTRUCTION."
   E. CURRENT CITY OF SAN ANTONIO "UTILITY EXCAVATION CRITERIA MANUAL"(UECM).
2. THE CONTRACTOR SHALL OBTAIN SAWS STANDARD DETAILS FROM SAWS WEBSITE, HTTP://WWW.SAWS.ORG/BUSINESS CENTER/SPECS. UNLESS OTHERWISE NOTED WITHIN DESIGN PLANS.
3. THE CONTRACTOR IS TO NOTIFY AND MAKE ARRANGEMENTS WITH THE SAWS CONSTRUCTION INSPECTION DIVISION AT 233-3500, AND PROVIDE NOTIFICATION PROCEDURES THE CONTRACTOR WILL USE TO NOTIFY AFFECTED HOME RESIDENTS AND/OR PROPERTY OWNERS 48 HOURS PRIOR TO EXCAVATION.
4. LOCATIONS AND DEPTHS OF EXISTING UTILITIES AND SERVICE LATERALS SHOWN ON THE PLANS ARE UNDERSTOOD TO BE APPROXIMATE. ACTUAL LOCATIONS AND DEPTHS MUST BE FIELD VERIFIED BY THE CONTRACTOR AT LEAST 1 WEEK PRIOR TO CONSTRUCTION. IT SHALL BE THE CONTRACTOR'S RESPONSIBILITY TO LOCATE UTILITY SERVICE LINES AS REQUIRED FOR CONSTRUCTION AND TO PROTECT THEM DURING CONSTRUCTION AT NO COST TO SAWS.
5. THE CONTRACTOR SHALL VERIFY THE EXACT LOCATION OF UNDERGROUND UTILITIES AND DRAINAGE STRUCTURES AT LEAST 1-2 WEEKS PRIOR TO CONSTRUCTION WHETHER SHOWN ON PLANS OR NOT. PLEASE ALLOW UP TO 7 BUSINESS DAYS FOR LOCATES REQUESTING PIPE LOCATION MARKERS ON SAWS FACILITIES.THE FOLLOWING CONTACT INFORMATION ARE SUPPLIED FOR VERIFICATION PURPOSES:
   SAN ANTONIO WATER SYSTEM:
   SAWS UTILITY LOCATES: HTTP://WWW.SAWS.ORG/SERVICE/LOCATES
   COSA DRAINAGE 207-8048
   COSA TRAFFIC SIGNAL OPERATIONS 207-7720
   TEXAS STATE WIDE ONE CALL LOCATOR 1-800-545-6005 OR 811
6. THE CONTRACTOR SHALL BE RESPONSIBLE FOR RESTORING EXISTING FENCES, CURBS, STREETS, DRIVEWAYS, SIDEWALKS, LANDSCAPING AND STRUCTURES TO ITS ORIGINAL OR BETTER CONDITION AS A RESULT OF DAMAGES DONE BY THE PROJECT'S CONSTRUCTION.
7. ALL WORK IN TEXAS HIGHWAY DEPARTMENT AND BEXAR COUNTY RIGHT-OF-WAY SHALL BE DONE IN ACCORDANCE WITH RESPECTIVE CONSTRUCTION SPECIFICATIONS AND PERMIT.
8. THE CONTRACTOR SHALL COMPLY WITH CITY OF SAN ANTONIO OR OTHER GOVERNING MUNICIPALITY'S TREE ORDINANCES WHEN EXCAVATING NEAR TREES.
9. THE CONTRACTOR SHALL NOT PLACE ANY WASTE MATERIALS IN THE 100-YEAR FLOOD PLAIN WITHOUT FIRST OBTAINING AN APPROVED FLOOD PLAIN PERMIT.
10. ANY WORK COMPLETED WITHOUT PRIOR WRITTEN AUTHORIZATION WHICH IS NOT INCLUDED IN THESE PLANS AND SPECIFICATIONS WILL NOT BE COMPENSATED BY THE SAN ANTONIO WATER SYSTEM.
11. HOLIDAY WORK: CONTRACTORS WILL NOT BE ALLOWED TO PERFORM SAWS WORK ON SAWS RECOGNIZED HOLIDAYS. REQUEST SHOULD BE SENT TO CONSTWORKREQ@SAWS.ORG.
    WEEKEND WORK: CONTRACTORS ARE REQUIRED TO NOTIFY THE SAWS INSPECTION CONSTRUCTION DEPARTMENT 48 HOURS IN ADVANCE TO REQUEST WEEKEND WORK. REQUEST SHOULD BE SENT TO CONSTWORKREQ@SAWS.ORG.
    ANY AND ALL SAWS UTILITY WORK INSTALLED WITHOUT HOLIDAY/WEEKEND APPROVAL WILL BE SUBJECT TO BE UNCOVERED FOR PROPER INSPECTION.
12. PRE CON SITE VIDEO: BEFORE THE START OF ANY CONSTRUCTION. THE SITE MUST BE VIDEO RECORDED BY THE CONTRACTOR WITH ONE COPY SUBMITTED TO SAWS INSPECTIONS. A PRE-SITE VIDEO WILL PROVIDE ACCURATE DOCUMENTATION OF THE EXISTING CONDITIONS. (NSPI)
13. POWER POLE BRACING: CONTRACTORS SHOULD BE ADVISED THAT THERE ARE EXISTING OVERHEAD UTILITY POLES ALONG THE PROJECT CORRIDOR. CONTRACTORS SHOULD FURTHER BE ADVISED THAT IF THE DISTANCE FROM THE OUTSIDE FACE OF A UTILITY TRENCH TO THE FACE OF A UTILITY POLE IS LESS THAN 5 FEET, SAID UTILITY POLE IS SUBJECT TO BRACING, BASED ON A DETERMINATION MADE BY UTILITY POLE OWNER. COSTS INCURRED BY CONTRACTOR FOR BRACING OF THESE UTILITY POLES IS SUBSIDIARY TO THAT RESPECTIVE UTILITY COMPANY'S WORK. IT IS ADVISABLE FOR THE CONTRACTOR TO REVIEW THE CONSTRUCTION DOCUMENTS, AND VISIT THE CONSTRUCTION SITE TO DETERMINE POTENTIAL IMPACTS.
14. PRIOR TO TIE-INS, ANY SHUTDOWNS OF EXISTING MAINS OF ANY SIZE MUST BE COORDINATED WITH THE SAWS INSPECTION AND/OR SAWS PRODUCTION GROUPS AT LEAST ONE WEEK OR MORE IN ADVANCE OF THE SHUTDOWN. THE CONTRACTOR MUST ALSO PROVIDE A SEQUENCE OF WORK AS RELATED TO THE TIE-INS; THIS IS AT NO ADDITIONAL COST TO SAWS OR THE PROJECT AND IT IS THE RESPONSIBILITY OF THE CONTRACTOR TO SEQUENCE THE WORK ACCORDINGLY.
    SAWS PRODUCTION CONTROL CENTER 233-2016
15. ASBESTOS CEMENT (AC) PIPE, ALSO KNOWN AS TRANSITE PIPE WHICH IS KNOWN TO CONTAIN ASBESTOS-CONTAINING MATERIAL (ACM), MAYBE LOCATED WITHIN THE PROJECT LIMITS. SPECIAL WASTE MANAGEMENT PROCEDURES AND HEALTH AND SAFETY REQUIREMENTS WILL BE APPLICABLE WHEN REMOVAL AND/OR DISTURBANCE OF THIS PIPE OCCURS, PAYMENT FOR SUCH WORK IS TO BE MADE UNDER SPECIAL SPECIFICATION ITEM NO. 3000, "SPECIAL SPECIFICATION FOR HANDLING ASBESTOS CEMENT PIPE".
16. VALVE REMOVAL: WHERE THE CONTRACTOR IS TO ABANDON A WATER MAIN, THE CONTROL VALVE LOCATED ON THE ABANDONING BRANCH WILL BE REMOVED AND REPLACED WITH A CAP/PLUG. (NSPI)

CPS ENERGY NOTE:
1. CALL THE TEXAS STATE WIDE ONE CALL LOCATOR NUMBER 1-800-344-8377, 48 HOURS BEFORE BEGINNING ANY EXCAVATION.
   DUE TO FEDERAL REGULATIONS TITLE 49, PART 192.181, CPS ENERGY MUST MAINTAIN ACCESS TO GAS VALVES AT ALL TIMES. THE CONTRACTOR MUST PROTECT AND WORK AROUND ANY GAS VALVES THAT ARE IN PROJECT AREA.
2. THE CONTRACTOR WILL BE RESPONSIBLE FOR PROTECTING CPS ENERGY OVERHEAD AND UNDERGROUND ELECTRIC FACILITIES IF ADJACENT TO WORK AREAS.
3. CONTRACTOR TO COORDINATE WITH CPS ENERGY AND FIELD VERIFY THE DEPTH OF GAS MAINS BEFORE BEGINNING OF CONSTRUCTION.
4. POWER POLES ARE TO BE BRACED BY THE CONTRACTOR, IF NECESSARY. (NSPI)

NOTES:
1. CONTRACTOR SHALL RESTRAIN ALL PROPOSED PIPES, VALVES AND FITTINGS AT NO ADDITIONAL COST (RL=RESTRAINT LENGTH)
2. CONTRACTOR TO MAINTAIN WATER SERVICE CONNECTIONS AT ALL TIMES DURING CONSTRUCTION. CONTRACTOR SHALL ALSO MAINTAIN ACCESS TO ALL EXISTING AND PROPOSED WATER VALVES AT ALL TIMES (NSPI).
3. NSPI - NOT A SEPARATE PAY ITEM.
4. THE CONTRACTOR SHALL BE RESPONSIBLE FOR MAINTAINING OPERATION OF ALL EXISTING UTILITIES AFFECTED BY PROPOSED CONSTRUCTION.
5. THE CONTRACTOR SHALL BE RESPONSIBLE FOR RESTORING TO ITS ORIGINAL, OR BETTER CONDITION, ANY DAMAGE DONE TO EXISTING CURBS, SIDEWALKS, OR DRIVEWAYS.
6. ALL STREET REPAIRS ARE REQUIRED TO BE SQUARE CUTS.
7. TREE PROTECTION IS NSPI.
8. CONTRACTOR SHALL INSTALL NEW SERVICES WITH 3 FOOT COVER MINIMUM
9. THE CONTRACTOR SHALL MAINTAIN AT LEAST TWO FEET OF VERTICAL SEPARATION DISTANCE BETWEEN ALL PROPOSED WATER LINES (MAINS AND SERVICES) AND EXISTING GAS MAINS.

ASBESTOS CEMENT PIPE CONNECTIONS & REMOVAL NOTE:
ASBESTOS CEMENT (A.C.) PIPE, ALSO KNOWN AS TRANSITE PIPE AND WHICH IS KNOWN TO CONTAIN ASBESTOS CONTAINING MATERIAL (ACM), IS LOCATED WITHIN THE PROJECT LIMITS. SPECIAL WASTE MANAGEMENT PROCEDURES AND HEALTH AND SAFETY REQUIREMENTS WILL BE APPLICABLE WHEN REMOVAL AND/OR DISTURBANCE OF THIS PIPE OCCUR. PAYMENT FOR SUCH WORK IS TO BE MADE UNDER SPECIAL SPECIFICATION ITEM NO. 3000, "SPECIAL SPECIFICATION FOR HANDLING ASBESTOS CEMENT PIPE."

NOTE FOR THE CITY OF SAN ANTONIO FLATWORK:
ALL LIMITS FOR CURB, SIDEWALK, AND TREE PREP BEYOND WHAT IS CONSIDERED INCIDENTAL TO NORMAL UTILITY CONSTRUCTION WILL BE ADDRESSED BY THE SAWS INSPECTOR. SAWS INSPECTOR WILL ALSO DETERMINE IF ADDITIONAL COMPENSATION IS WARRANTED IF LIMITS EXCEED INCIDENTALS.

AT&T NOTES:
1. THE EXISTENCE AND LOCATION OF UNDERGROUND CABLE INDICATED ON THE PLANS ARE TAKEN FROM THE BEST RECORDS AVAILABLE AND ARE NOT GUARANTEED TO BE ACCURATE.
2. THE CONTRACTOR SHOULD CALL FOR LOCATES THROUGH THE "ONE CALL" UTILITY LOCATE SERVICE (1-800-545-6005) 48 HOURS PRIOR TO CONSTRUCTION/EXCAVATION WORK. CONTRACTORS HAVE THE RESPONSIBILITY TO PROTECT AND SUPPORT TELEPHONE COMPANY PLANT DURING CONSTRUCTION.

TRENCH EXCAVATION SAFETY PROTECTION
CONTRACTOR AND/OR CONTRACTOR'S INDEPENDENTLY RETAINED EMPLOYEE OR STRUCTURAL DESIGN/GEOTECHNICAL/SAFETY/EQUIPMENT CONSULTANT, IF ANY SHALL REVIEW THESE PLANS AND AVAILABLE GEOTECHNICAL INFORMATION AND THE ANTICIPATED INSTALLATION SITE(S) WITHIN THE PROJECT WORK AREA IN ORDER TO IMPLEMENT CONTRACTOR'S TRENCH EXCAVATION SAFETY PROTECTION SYSTEMS, PROGRAMS AND/OR PROCEDURES. THE CONTRACTOR'S IMPLEMENTATION OF THE SYSTEMS, PROGRAMS AND/OR PROCEDURES SHALL PROVIDE FOR ADEQUATE TRENCH EXCAVATION SAFETY PROTECTION THAT COMPLIES WITH, AS A MINIMUM, OSHA STANDARDS FOR TRENCH EXCAVATIONS. SPECIFICALLY, CONTRACTOR AND/OR CONTRACTOR'S INDEPENDENTLY RETAINED EMPLOYEE OF SAFETY CONSULTANT SHALL IMPLEMENT A TRENCH SAFETY PROGRAM IN ACCORDANCE WITH OSHA STANDARDS GOVERNING THE PRESENCE AND ACTIVITIES OF INDIVIDUALS WORKING IN AND AROUND TRENCH EXCAVATION.

TOTAL QUANTITIES

(550) TRENCH PROTECTION	LF	10919
(814) 12" DUCTILE IRON CLASS 350 WATERLINE	LF	92
(814) 16" DUCTILE IRON CLASS 250 WATERLINE	LF	10822
(814) 24" DUCTILE IRON CLASS 250 WATERLINE	LF	5
(824) 3/4" SERVICE RELAY	EA	2
(828) 16" GATE VALVE	EA	14
(828) 12" GATE VALVE	EA	2
(833) REMOVE AND REPLACE PERMANENT BLOWOFF BOX	EA	1
(834) FIRE HYDRANT	EA	24
(834) RELOCATE FIRE HYDRANT	EA	5
(836) PIPE FITTINGS, ALL SIZES & TYPES	TON	10.4
(840) 12" WATER TIE-IN	EA	3
(840) 16" WATER TIE-IN	EA	4
(840) 24" WATER TIE-IN	EA	1
(841) HYDROSTATIC TESTING	EA	13
(844) 2" BLOW-OFF, TEMPORARY	EA	7
(844) 4" BLOW-OFF, TEMPORARY	EA	1
(846) 1" AIR RELEASE ASSEMBLY	EA	10
(856) 30" STEEL CASING	LF	101

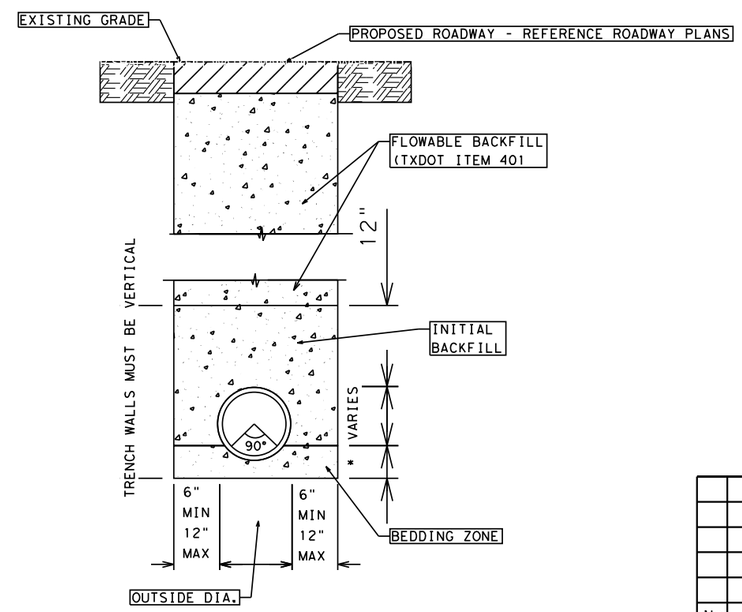

TRENCH DETAIL
SCALE: NTS

SPECIAL PROJECT NOTES
1. CONTRACTOR SHALL BACKFILL WATER MAIN WIL FLOWABLE FILL (TXDOT SPEC ITEM 401) WHEN UNDER THE PAVEMENT OR CURB PER DETAIL ON SHEET 2. FLOWABLE FILL SHALL NOT BE MEASURED FOR PAYMENT AND SHALL BE CONSIDERED SUBSIDIARY TO PAY ITEM 814

70% SUBMITTAL
THIS DOCUMENT IS RELEASED FOR THE PURPOSE OF INTERIM REVIEW UNDER THE AUTHORITY OF Michael Persyn, P.E. 96583 2/17/2017
THIS DOCUMENT IS NOT INTENDED FOR BIDDING, PERMITTING AND/OR CONSTRUCTION PURPOSES
70% SUBMITTAL

No.	Revision	Drawn	Approved	Date

REVISIONS

TALLEY ROAD WATER PLANS

GENERAL NOTES AND QUANTITIES

DEVELOPER:
CONT. | BUDGET PROJ.
SUBMITTED
APPROVED

MAP No. | SHEET 2
SECT. No. | OF 31
DR. | CK. | JOB No. 16-5020

TOTAL QUANTITIES

WATER PLAN AND PROFILE SHEET NO.	LOCATION	550 TRENCH PROTECTION	814 12" DUCTILE IRON CLASS 350 WATERLINE	814 16" DUCTILE IRON CLASS 250 WATERLINE	814 24" DUCTILE IRON CLASS 250 WATERLINE	824 3/4" SERVICE RELAY	828 16" GATE VALVE	828 12" GATE VALVE	833 REMOVE AND REPLACE PERMANENT BLOWOFF BOX	834 FIRE HYDRANT	834 RELOCATE FIRE HYDRANT	836 PIPE FITTINGS, ALL SIZES & TYPES	840 12" WATER TIE-IN
		LF	LF	LF	LF	EA	EA	EA	EA	EA	EA	TON	EA
SHEET 5 OF 31	WATERLINE A BEGIN TO STA 5+00	442	27	415			2			1		0.9	1
SHEET 6 OF 31	WATERLINE A STA 5+00 TO STA 9+00	405		405			2			1		0.7	
SHEET 7 OF 31	WATERLINE A STA 9+00 TO STA 13+00	400		400						1		0.2	
SHEET 8 OF 31	WATERLINE A STA 13+00 TO STA 17+00	428	28	400			1	1		1		0.7	1
SHEET 9 OF 31	WATERLINE A STA 17+00 TO STA 21+00	400		400						2		0.6	
SHEET 10 OF 31	WATERLINE A STA 21+00 TO STA 25+00	400		400			1			1		0.2	
SHEET 11 OF 31	WATERLINE A STA 25+00 TO STA 29+00	400		400						1		0.8	
SHEET 12 OF 31	WATERLINE A STA 29+00 TO STA 33+00	400		400						1		0.2	
SHEET 13 OF 31	WATERLINE A STA 33+00 TO STA 37+00	400		400			1			1		0.2	
SHEET 14 OF 31	WATERLINE A STA 37+00 TO STA 41+00	400		400						2		0.3	
SHEET 15 OF 31	WATERLINE A STA 41+00 TO STA 45+00	400		400								0.4	
SHEET 16 OF 31	WATERLINE A STA 45+00 TO STA 49+00	400		400			1					0.3	
SHEET 17 OF 31	WATERLINE A STA 49+00 TO STA 53+00	400		400						1		0.4	
SHEET 18 OF 31	WATERLINE A STA 53+00 TO STA 57+00	400		400			1			1		0.2	
SHEET 19 OF 31	WATERLINE A STA 57+00 TO STA 61+00	400		400						1		0.2	
SHEET 20 OF 31	WATERLINE A STA 61+00 TO STA 65+00	400		400						1		0.2	
SHEET 21 OF 31	WATERLINE A STA 65+00 TO STA 69+00	400		400						1		0.2	
SHEET 22 OF 31	WATERLINE A STA 69+00 TO STA 73+00	400		400						1		0.2	
SHEET 23 OF 31	WATERLINE A STA 73+00 TO STA 77+00	400		400			1			1		0.2	
SHEET 24 OF 31	WATERLINE A STA 77+00 TO STA 81+00	437	37	400			1	1		1		0.5	1
SHEET 25 OF 31	WATERLINE A STA 81+00 TO STA 85+00	400		400						1		0.2	
SHEET 26 OF 31	WATERLINE A STA 85+00 TO STA 89+00	400		400						1		0.5	
SHEET 27 OF 31	WATERLINE A STA 89+00 TO STA 93+00	400		400			1			1	1	0.2	
SHEET 28 OF 31	WATERLINE A STA 93+00 TO STA 97+00	400		400						1		0.3	
SHEET 29 OF 31	WATERLINE A STA 97+00 TO END	354		349	5		1		1			0.6	
SHEET 30 OF 31	WATERLINE B BEGIN TO STA 5+00	405		405		2					2	0.3	
SHEET 31 OF 31	WATERLINE B STA 5+00 TO END	448		448			1				2	0.7	
TOTALS		10919	92	10822	5	2	14	2	1	24	5	10.4	3

WATER PLAN AND PROFILE SHEET NO.	LOCATION	840 16" WATER TIE-IN	840 24" WATER TIE-IN	841 HYDROSTATIC TESTING	844 2" BLOW-OFF, TEMPORARY	844 4" BLOW-OFF, TEMPORARY	846 1" AIR RELEASE ASSEMBLY	856 30" STEEL CASING
		EA	EA	EA	EA	EA	EA	LF
SHEET 5 OF 31	WATERLINE A BEGIN TO STA 5+00	1		2	2		1	
SHEET 6 OF 31	WATERLINE A STA 5+00 TO STA 9+00	1		1	1		1	
SHEET 7 OF 31	WATERLINE A STA 9+00 TO STA 13+00							
SHEET 8 OF 31	WATERLINE A STA 13+00 TO STA 17+00			1	1			
SHEET 9 OF 31	WATERLINE A STA 17+00 TO STA 21+00							33
SHEET 10 OF 31	WATERLINE A STA 21+00 TO STA 25+00						1	
SHEET 11 OF 31	WATERLINE A STA 25+00 TO STA 29+00							25
SHEET 12 OF 31	WATERLINE A STA 29+00 TO STA 33+00							
SHEET 13 OF 31	WATERLINE A STA 33+00 TO STA 37+00						1	
SHEET 14 OF 31	WATERLINE A STA 37+00 TO STA 41+00							
SHEET 15 OF 31	WATERLINE A STA 41+00 TO STA 45+00							
SHEET 16 OF 31	WATERLINE A STA 45+00 TO STA 49+00						1	
SHEET 17 OF 31	WATERLINE A STA 49+00 TO STA 53+00			2				
SHEET 18 OF 31	WATERLINE A STA 53+00 TO STA 57+00							
SHEET 19 OF 31	WATERLINE A STA 57+00 TO STA 61+00							
SHEET 20 OF 31	WATERLINE A STA 61+00 TO STA 65+00							
SHEET 21 OF 31	WATERLINE A STA 65+00 TO STA 69+00							
SHEET 22 OF 31	WATERLINE A STA 69+00 TO STA 73+00							
SHEET 23 OF 31	WATERLINE A STA 73+00 TO STA 77+00			3			1	
SHEET 24 OF 31	WATERLINE A STA 77+00 TO STA 81+00			2	1			
SHEET 25 OF 31	WATERLINE A STA 81+00 TO STA 85+00							
SHEET 26 OF 31	WATERLINE A STA 85+00 TO STA 89+00							43
SHEET 27 OF 31	WATERLINE A STA 89+00 TO STA 93+00						1	
SHEET 28 OF 31	WATERLINE A STA 93+00 TO STA 97+00							
SHEET 29 OF 31	WATERLINE A STA 97+00 TO END		1	1		1	1	
SHEET 30 OF 31	WATERLINE B BEGIN TO STA 5+00	1		1	1		2	
SHEET 31 OF 31	WATERLINE B STA 5+00 TO END	1			1			
TOTALS		4	1	13	7	1	10	101

70% SUBMITTAL

THIS DOCUMENT IS RELEASED FOR THE PURPOSE OF INTERIM REVIEW UNDER THE AUTHORITY OF Michael Persyn, P.E. 96583 2/17/2017

THIS DOCUMENT IS NOT INTENDED FOR BIDDING, PERMITTING AND/OR CONSTRUCTION PURPOSES

70% SUBMITTAL

No.	Revision	Drawn	Approved	Date

REVISIONS

TALLEY ROAD WATER PLANS

QUANTITIES BY SHEET

DEVELOPER:

CONT. | BUDGET PROJ.

SUBMITTED

APPROVED

MAP No. | SHEET

SECT. No. | 3

DR. | CK. | JOB No. 16-5020 | OF 31

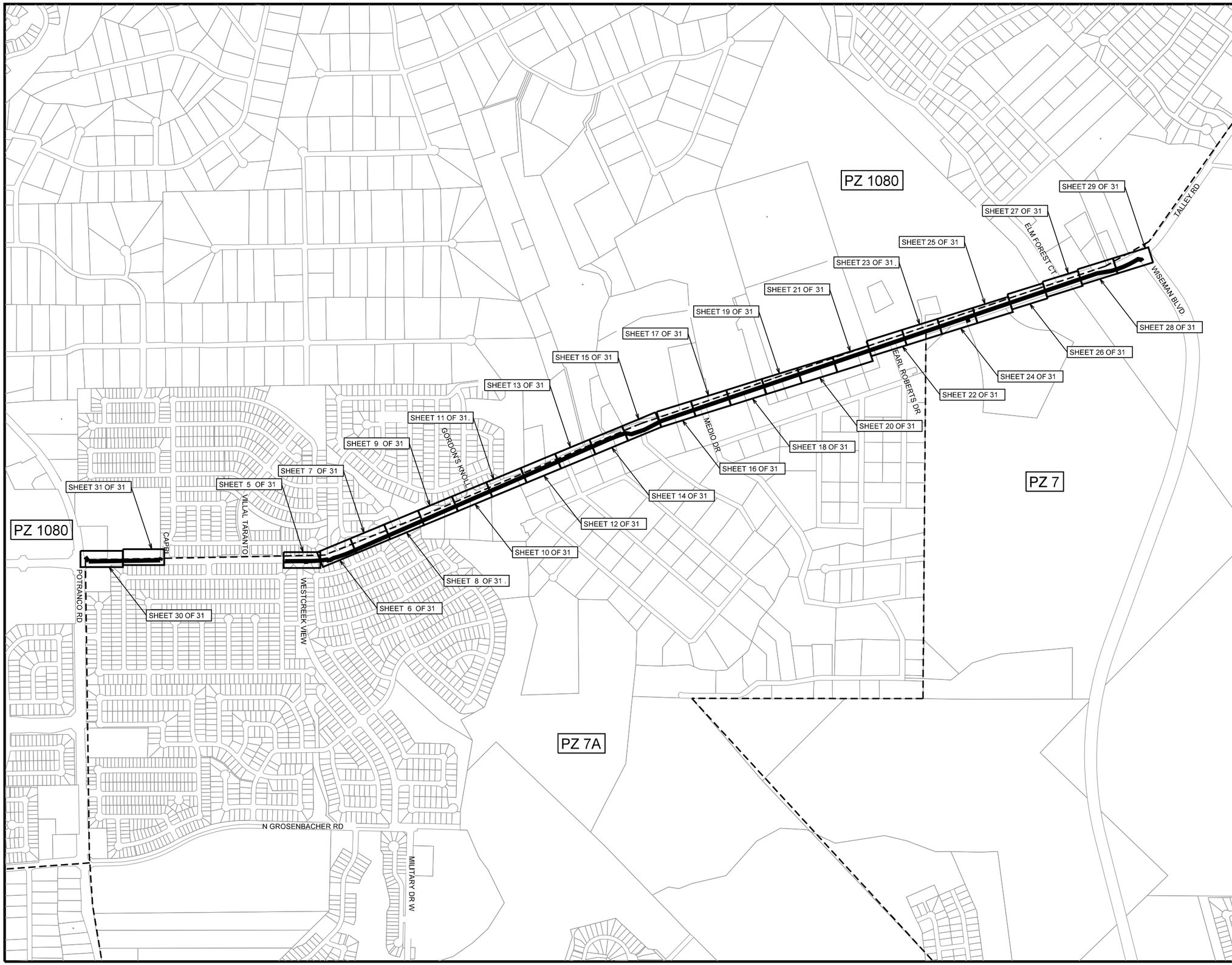

LEGEND:

PRESSURE ZONE BOUNDARY

PROJECT LOCATION

0 500 1000

70% SUBMITTAL

THIS DOCUMENT IS RELEASED FOR THE PURPOSE OF INTERIM REVIEW UNDER THE AUTHORITY OF Michael Persyn, P.E. 96583 2/17/2017

THIS DOCUMENT IS NOT INTENDED FOR BIDDING, PERMITTING AND/OR CONSTRUCTION PURPOSES.

70% SUBMITTAL

No.	Revision	Drawn	Approved	Date

REVISIONS

TALLEY ROAD WATER PLANS

PROJECT LAYOUT

DEVELOPER:

CONT. | BUDGET PROJ.

SUBMITTED

APPROVED

MAP No.

SECT. No.

DR. | CK. | JOB No. 16-5020

SHEET 4 OF 31

TRENCH EXCAVATION SAFETY PROTECTION
CONTRACTOR AND/OR CONTRACTOR'S INDEPENDENTLY RETAINED EMPLOYEE OR STRUCTURAL DESIGN/GEOTECHNICAL/SAFETY/EQUIPMENT CONSULTANT, IF ANY SHALL REVIEW THESE PLANS AND AVAILABLE GEOTECHNICAL INFORMATION AND THE ANTICIPATED INSTALLATION SITE(S) WITHIN THE PROJECT WORK AREA IN ORDER TO IMPLEMENT CONTRACTOR'S TRENCH EXCAVATION SAFETY PROTECTION SYSTEM, PROGRAMS AND/OR PROCEDURES, THE CONTRACTOR'S IMPLEMENTATION OF THE SYSTEMS, PROGRAMS AND/OR PROCEDURES SHALL PROVIDE FOR ADEQUATE TRENCH EXCAVATION SAFETY PROTECTION THAT COMPLIES WITH AS A MINIMUM, OSHA STANDARDS FOR TRENCH EXCAVATIONS. SPECIFICALLY, CONTRACTOR AND/OR CONTRACTOR'S INDEPENDENTLY RETAINED EMPLOYEE OF SAFETY CONSULTANT SHALL IMPLEMENT A TRENCH SAFETY PROGRAM IN ACCORDANCE WITH OSHA STANDARDS GOVERNING THE PRESENCE AND ACTIVITIES OF INDIVIDUALS WORKING IN AND AROUND TRENCH EXCAVATION.

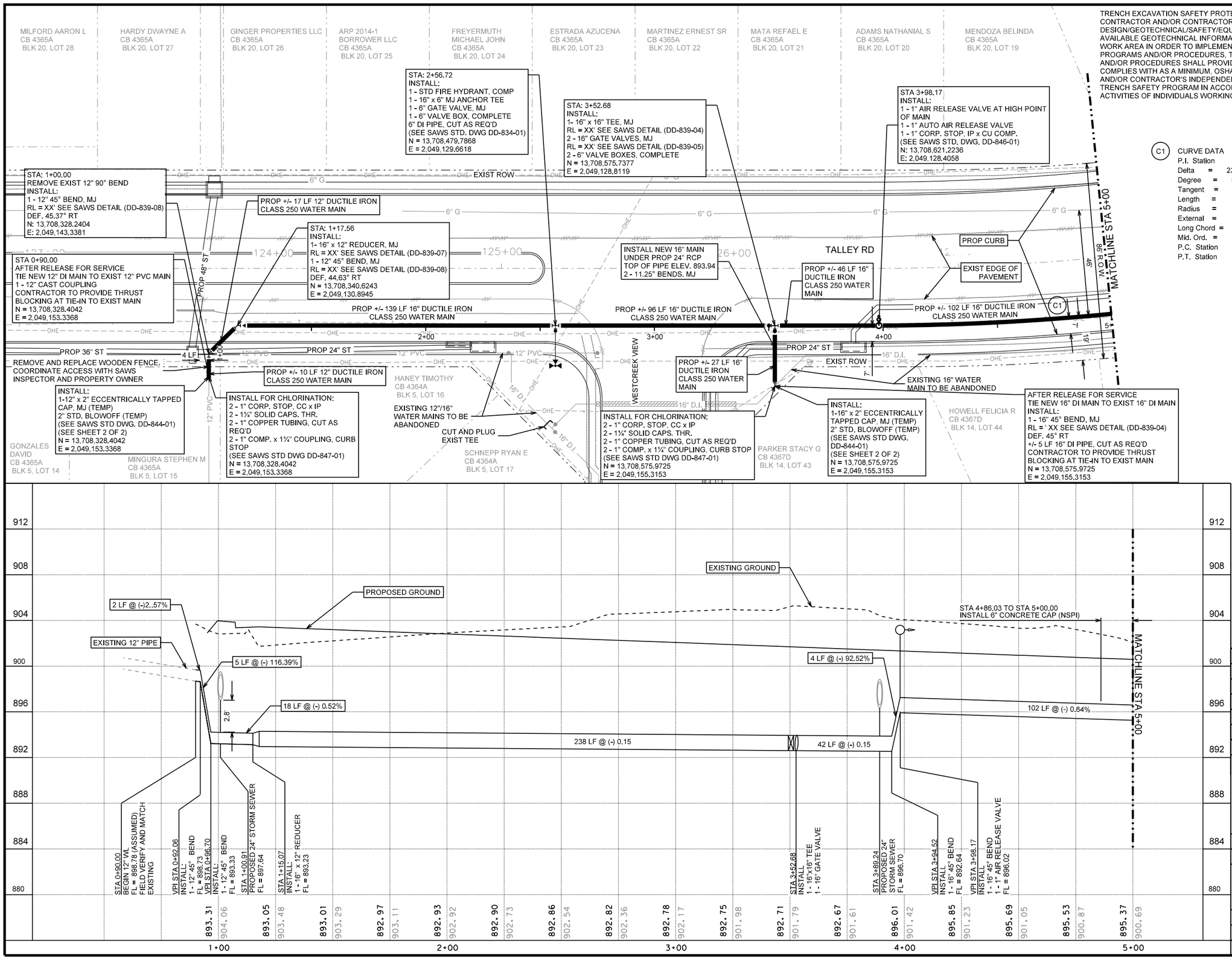

C1 CURVE DATA

P.I. Station		6+13.02
Delta	=	23° 04' 57.98" (LT)
Degree	=	5° 22' 47.58"
Tangent	=	217.4779
Length	=	429.0570
Radius	=	1,065.0000
External	=	21.9782
Long Chord	=	426.1613
Mid. Ord.	=	21.5338
P.C. Station		3+95.54
P.T. Station		8+24.59

LEGEND

- PROP. WATER MAIN
- EXIST. WATER MAIN — 6"C.I.
- GAS MAIN — 2"G
- SANITARY SEWER — 8"SA
- STORM SEWER — 24"ST
- UTILITY POLE LINE
- ELECTRIC CABLE — E
- TELEPHONE CABLE — T
- DUAL BRANCH SERV.
- NEW UNMETERED SERVICE:
  - 3/4" SINGLE
  - 1" DUAL
- SERVICE RECONNECT:
  - 3/4"
  - 1" OR LARGER
- SERVICE RELAY:
  - 3/4"
  - 1" OR LARGER
- SERVICE RELOCATE:
  - 3/4"
  - 1" OR LARGER
- RELOCATE METER
- NEW SERVICE:
  - 3/4"
  - 1" OR LARGER

HORIZONTAL SCALE
0 20' 40'
VERTICAL SCALE
0 4' 8'

70% SUBMITTAL

THIS DOCUMENT IS RELEASED FOR THE PURPOSE OF INTERIM REVIEW UNDER THE AUTHORITY OF Michael Persyn, P.E. 96583 2/17/2017
THIS DOCUMENT IS NOT INTENDED FOR BIDDING, PERMITTING AND/OR CONSTRUCTION PURPOSES

70% SUBMITTAL

No.	Revision	Drawn	Approved	Date

REVISIONS

TALLEY ROAD WATER PLANS

WATERLINE A - PLAN AND PROFILE BEGIN TO STA 5+00

DEVELOPER:
CONT. BUDGET PROJ.
SUBMITTED
APPROVED
MAP No.
SECT. No.
DR. CK. JOB No. 16-5020
SHEET 5 OF 31

TRENCH EXCAVATION SAFETY PROTECTION
CONTRACTOR AND/OR CONTRACTOR'S INDEPENDENTLY RETAINED EMPLOYEE OR STRUCTURAL DESIGN/GEOTECHNICAL/SAFETY/EQUIPMENT CONSULTANT, IF ANY SHALL REVIEW THESE PLANS AND AVAILABLE GEOTECHNICAL INFORMATION AND THE ANTICIPATED INSTALLATION SITE(S) WITHIN THE PROJECT WORK AREA IN ORDER TO IMPLEMENT CONTRACTOR'S TRENCH EXCAVATION SAFETY PROTECTION SYSTEM, PROGRAMS AND/OR PROCEDURES, THE CONTRACTOR'S IMPLEMENTATION OF THE SYSTEMS, PROGRAMS AND/OR PROCEDURES SHALL PROVIDE FOR ADEQUATE TRENCH EXCAVATION SAFETY PROTECTION THAT COMPLIES WITH AS A MINIMUM, OSHA STANDARDS FOR TRENCH EXCAVATIONS. SPECIFICALLY, CONTRACTOR AND/OR CONTRACTOR'S INDEPENDENTLY RETAINED EMPLOYEE OF SAFETY CONSULTANT SHALL IMPLEMENT A TRENCH SAFETY PROGRAM IN ACCORDANCE WITH OSHA STANDARDS GOVERNING THE PRESENCE AND ACTIVITIES OF INDIVIDUALS WORKING IN AND AROUND TRENCH EXCAVATION.

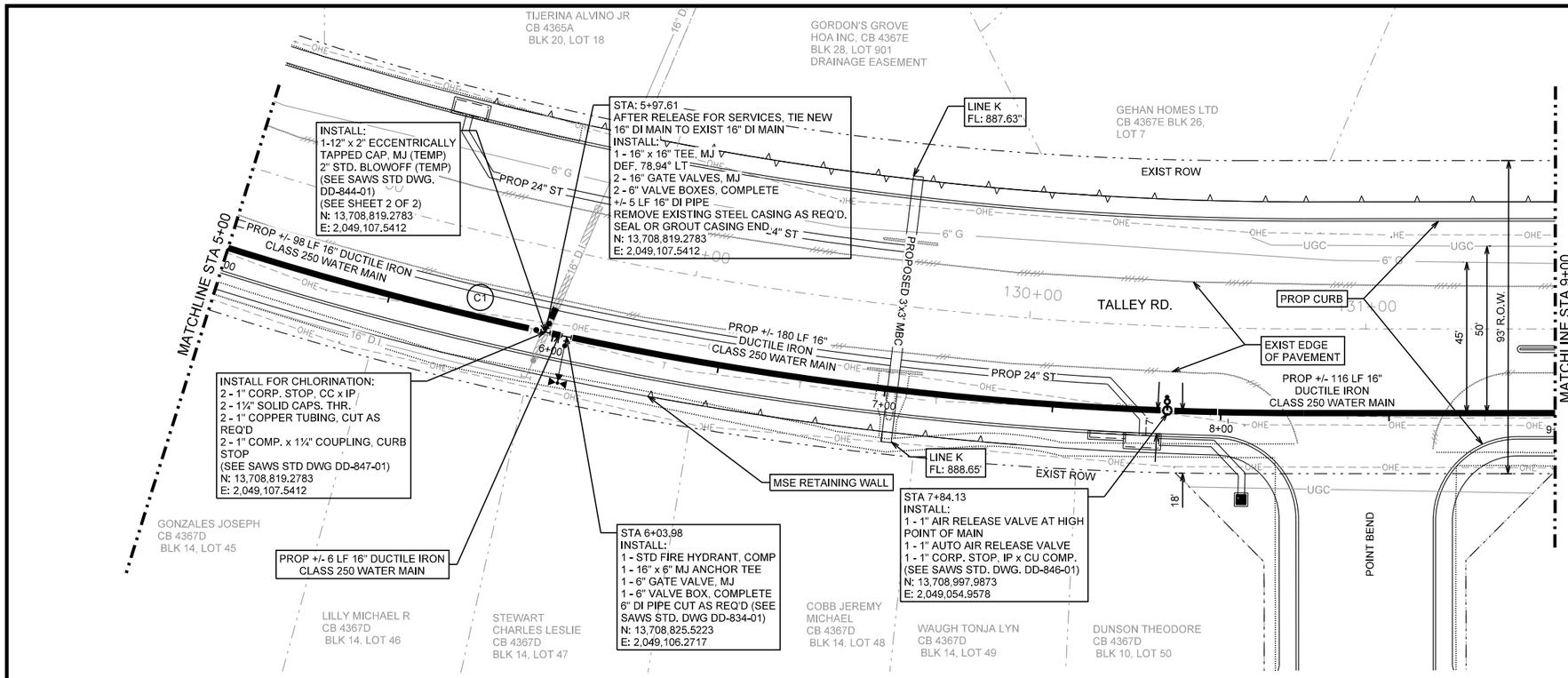

C1 CURVE DATA

P.I. Station	6+13.02
Delta =	23° 04' 57.98" (LT)
Degree =	5° 22' 47.58"
Tangent =	217.4779
Length =	429.0570
Radius =	1,065.0000
External =	21.9782
Long Chord =	426.1613
Mid. Ord. =	21.5338
P.C. Station	3+95.54
P.T. Station	8+24.59

LEGEND

- PROP. WATER MAIN
- EXIST. WATER MAIN — 6"C.I.W.
- GAS MAIN — 2"G
- SANITARY SEWER — 8"SA
- STORM SEWER — 24"ST
- UTILITY POLE LINE
- ELECTRIC CABLE — E
- TELEPHONE CABLE — T
- DUAL BRANCH SERV.
- NEW UNMETERED SERVICE:
  - 3/4" SINGLE
  - 1" DUAL
- SERVICE RECONNECT:
  - 3/4"
  - 1" OR LARGER
- SERVICE RELAY:
  - 3/4"
  - 1" OR LARGER
- SERVICE RELOCATE:
  - 3/4"
  - 1" OR LARGER
- RELOCATE METER
- NEW SERVICE:
  - 3/4"
  - 1" OR LARGER

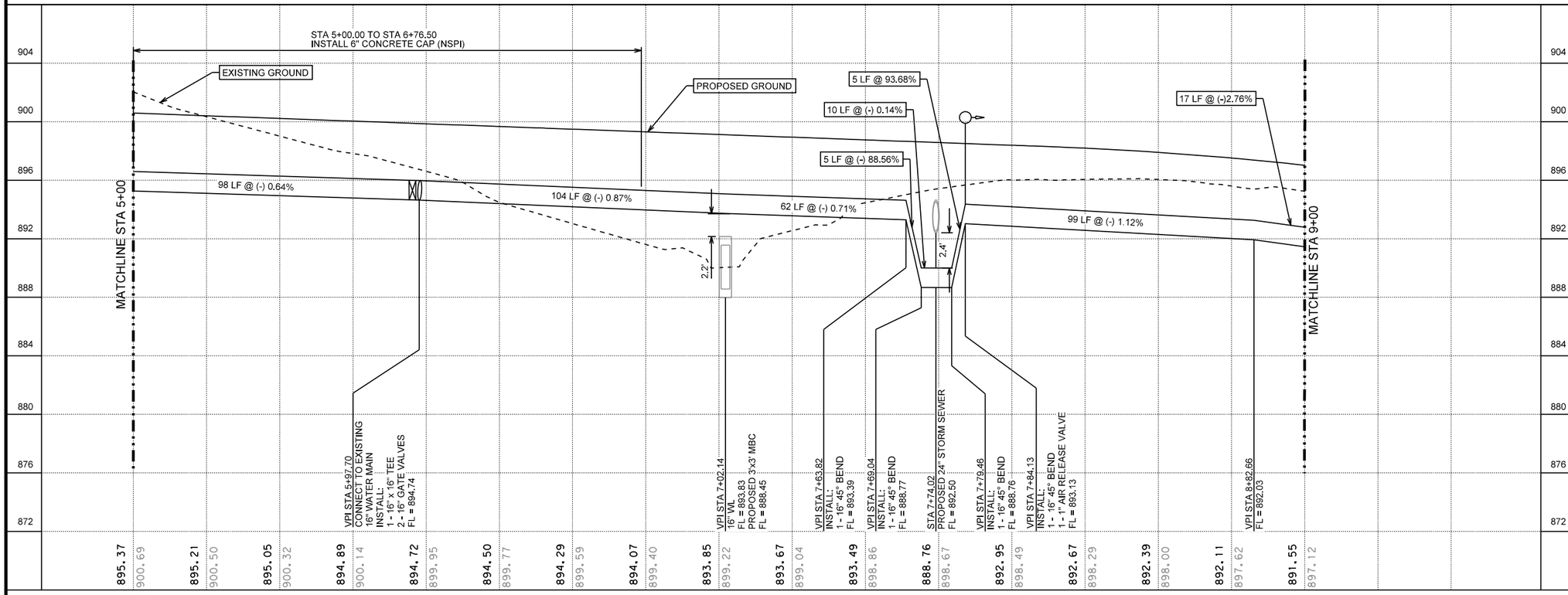

HORIZONTAL SCALE
0 20' 40'
0 4' 8'
VERTICAL SCALE

70% SUBMITTAL
THIS DOCUMENT IS RELEASED FOR THE PURPOSE OF INTERIM REVIEW UNDER THE AUTHORITY OF
Michael Persyn, P.E.
96583
2/17/2017
THIS DOCUMENT IS NOT INTENDED FOR BIDDING, PERMITTING AND/OR CONSTRUCTION PURPOSES
70% SUBMITTAL

No.	Revision	Drawn	Approved	Date

REVISIONS

TALLEY ROAD WATER PLANS
WATERLINE A - PLAN AND PROFILE
STA 5+00 TO STA 9+00

DEVELOPER:
CONT. | BUDGET PROJ.
SUBMITTED
APPROVED

MAP No.			SHEET 6 OF 31
SECT. No.			
DR.	CK.	JOB No. 16-5020	

TRENCH EXCAVATION SAFETY PROTECTION
CONTRACTOR AND/OR CONTRACTOR'S INDEPENDENTLY RETAINED EMPLOYEE OR STRUCTURAL DESIGN/GEOTECHNICAL/SAFETY/EQUIPMENT CONSULTANT, IF ANY SHALL REVIEW THESE PLANS AND AVAILABLE GEOTECHNICAL INFORMATION AND THE ANTICIPATED INSTALLATION SITE(S) WITHIN THE PROJECT WORK AREA IN ORDER TO IMPLEMENT CONTRACTOR'S TRENCH EXCAVATION SAFETY PROTECTION SYSTEM, PROGRAMS AND/OR PROCEDURES, THE CONTRACTOR'S IMPLEMENTATION OF THE SYSTEMS, PROGRAMS AND/OR PROCEDURES SHALL PROVIDE FOR ADEQUATE TRENCH EXCAVATION SAFETY PROTECTION THAT COMPLIES WITH AS A MINIMUM, OSHA STANDARDS FOR TRENCH EXCAVATIONS. SPECIFICALLY, CONTRACTOR AND/OR CONTRACTOR'S INDEPENDENTLY RETAINED EMPLOYEE OF SAFETY CONSULTANT SHALL IMPLEMENT A TRENCH SAFETY PROGRAM IN ACCORDANCE WITH OSHA STANDARDS GOVERNING THE PRESENCE AND ACTIVITIES OF INDIVIDUALS WORKING IN AND AROUND TRENCH EXCAVATION.

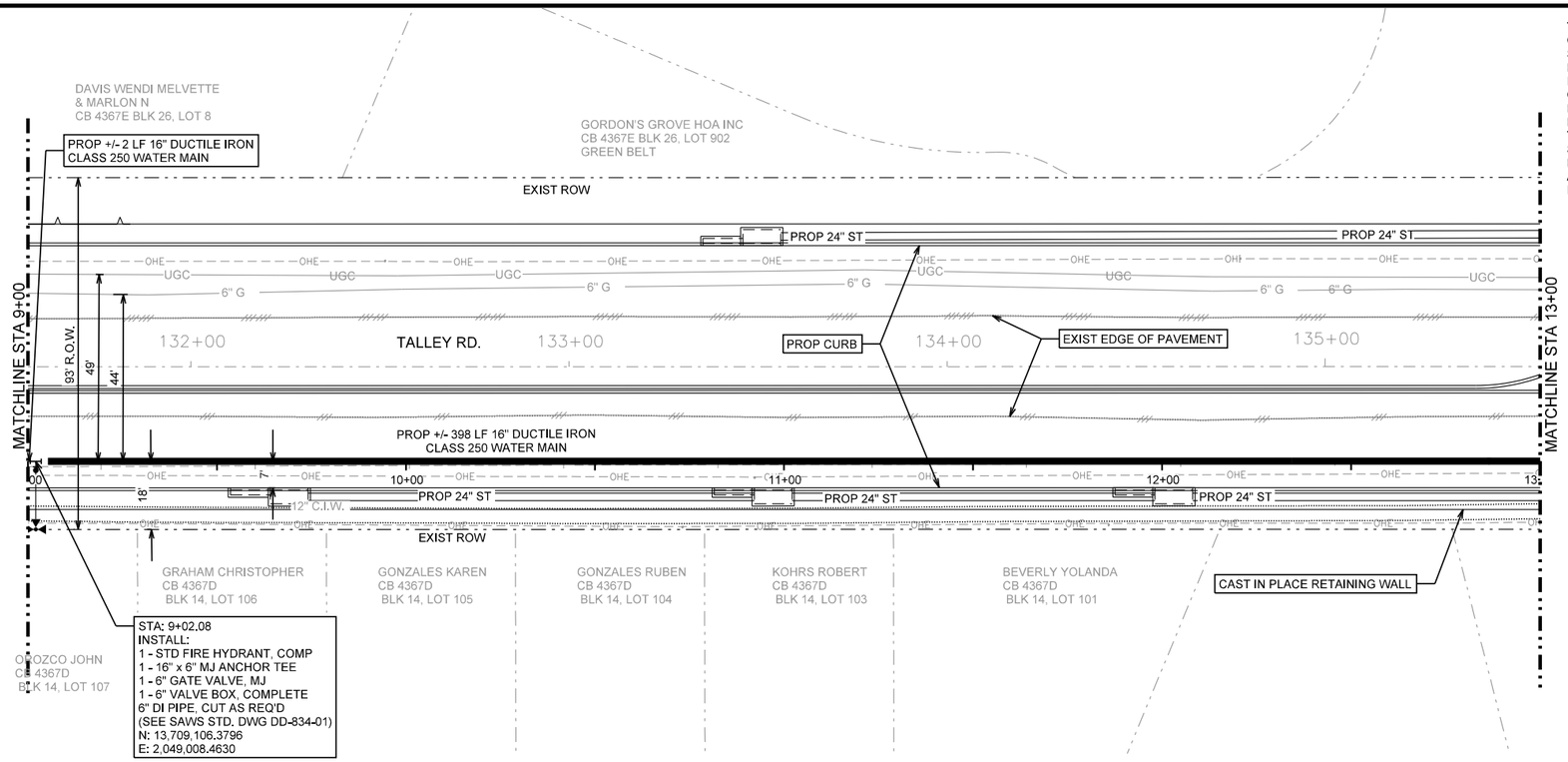

LEGEND

- PROP. WATER MAIN
- EXIST. WATER MAIN — 6"C.I.W.
- GAS MAIN — 2"G
- SANITARY SEWER — 8"SA
- STORM SEWER — 24"ST
- UTILITY POLE LINE
- ELECTRIC CABLE — E
- TELEPHONE CABLE — T
- DUAL BRANCH SERV.
- NEW UNMETERED SERVICE:
  - 3/4" SINGLE
  - 1" DUAL
- SERVICE RECONNECT:
  - 3/4"
  - 1" OR LARGER
- SERVICE RELAY:
  - 3/4"
  - 1" OR LARGER
- SERVICE RELOCATE:
  - 3/4"
  - 1" OR LARGER
- RELOCATE METER
- NEW SERVICE:
  - 3/4"
  - 1" OR LARGER

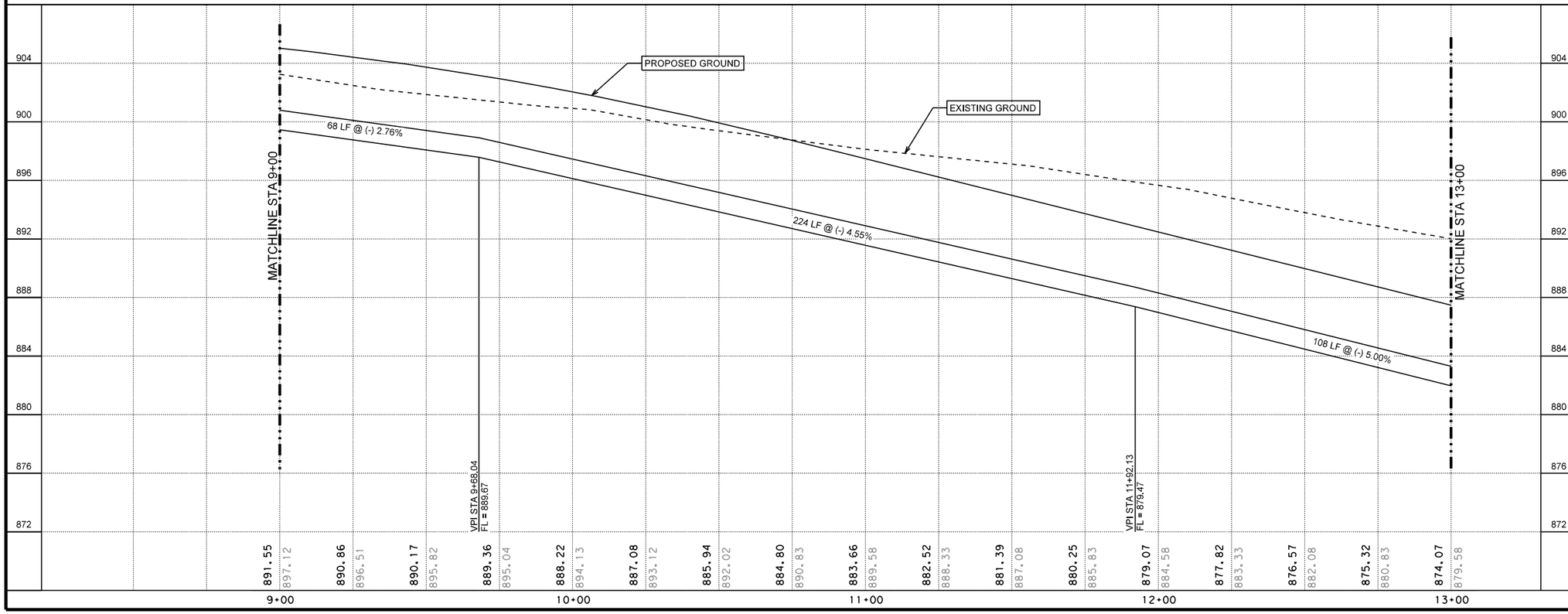

HORIZONTAL SCALE
0 20' 40'
0 4' 8'
VERTICAL SCALE

70% SUBMITTAL

THIS DOCUMENT IS RELEASED FOR THE PURPOSE OF INTERIM REVIEW UNDER THE AUTHORITY OF Michael Persyn, P.E. 96583 2/17/2017

THIS DOCUMENT IS NOT INTENDED FOR BIDDING, PERMITTING AND/OR CONSTRUCTION PURPOSES

70% SUBMITTAL

No.	Revision	Drawn	Approved	Date

REVISIONS

TALLEY ROAD WATER PLANS

WATERLINE A - PLAN AND PROFILE STA 9+00 TO STA 13+00

DEVELOPER:

CONT. | BUDGET PROJ.

SUBMITTED

APPROVED

MAP No. | SHEET 7

SECT. No. | OF 31

DR. | CK. | JOB No. 16-5020

TRENCH EXCAVATION SAFETY PROTECTION
CONTRACTOR AND/OR CONTRACTOR'S INDEPENDENTLY RETAINED EMPLOYEE OR STRUCTURAL DESIGN/GEOTECHNICAL/SAFETY/EQUIPMENT CONSULTANT, IF ANY SHALL REVIEW THESE PLANS AND AVAILABLE GEOTECHNICAL INFORMATION AND THE ANTICIPATED INSTALLATION SITE(S) WITHIN THE PROJECT WORK AREA IN ORDER TO IMPLEMENT CONTRACTOR'S TRENCH EXCAVATION SAFETY PROTECTION SYSTEM, PROGRAMS AND/OR PROCEDURES, THE CONTRACTOR'S IMPLEMENTATION OF THE SYSTEMS, PROGRAMS AND/OR PROCEDURES SHALL PROVIDE FOR ADEQUATE TRENCH EXCAVATION SAFETY PROTECTION THAT COMPLIES WITH AS A MINIMUM, OSHA STANDARDS FOR TRENCH EXCAVATIONS. SPECIFICALLY, CONTRACTOR AND/OR CONTRACTOR'S INDEPENDENTLY RETAINED EMPLOYEE OF SAFETY CONSULTANT SHALL IMPLEMENT A TRENCH SAFETY PROGRAM IN ACCORDANCE WITH OSHA STANDARDS GOVERNING THE PRESENCE AND ACTIVITIES OF INDIVIDUALS WORKING IN AND AROUND TRENCH EXCAVATION.

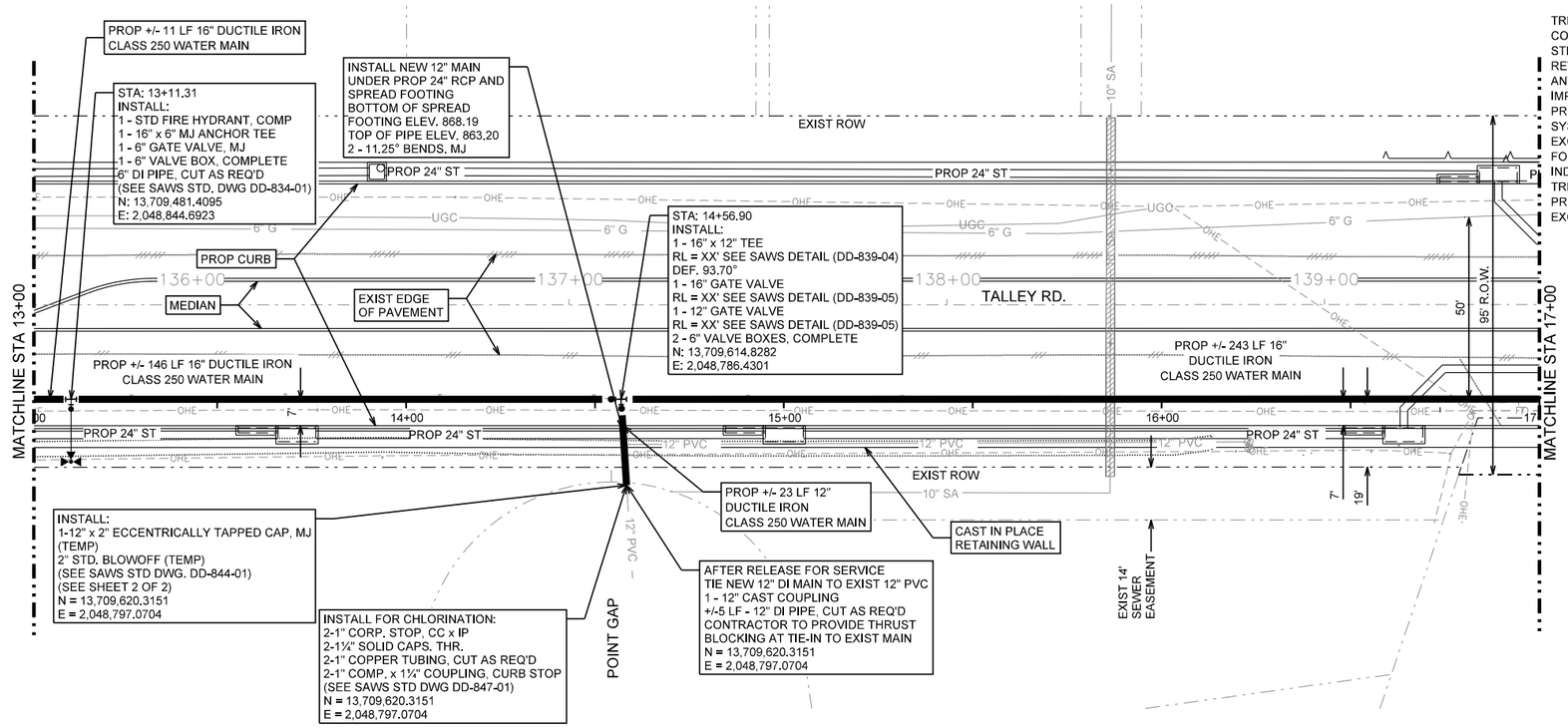

LEGEND

- PROP. WATER MAIN
- EXIST. WATER MAIN — 6"C.I.W.
- GAS MAIN — 2"G
- SANITARY SEWER — 8"SA
- STORM SEWER — 24"ST
- UTILITY POLE LINE
- ELECTRIC CABLE — E
- TELEPHONE CABLE — T
- DUAL BRANCH SERV.
- NEW UNMETERED SERVICE:
  - 3/4" SINGLE
  - 1" DUAL
- SERVICE RECONNECT:
  - 3/4"
  - 1" OR LARGER
- SERVICE RELAY:
  - 3/4"
  - 1" OR LARGER
- SERVICE RELOCATE:
  - 3/4"
  - 1" OR LARGER
- RELOCATE METER
- NEW SERVICE:
  - 3/4"
  - 1" OR LARGER

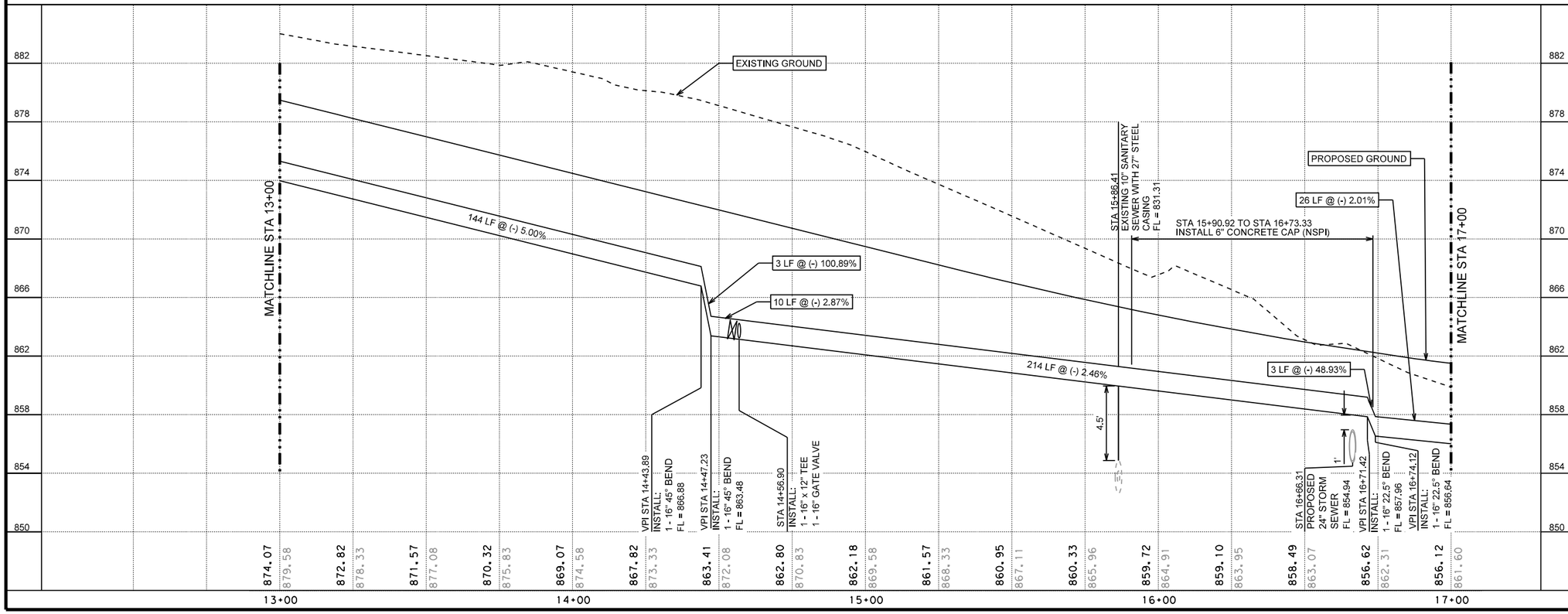

HORIZONTAL SCALE
0 20' 40'
0 4' 8'
VERTICAL SCALE

70% SUBMITTAL

THIS DOCUMENT IS RELEASED FOR THE PURPOSE OF INTERIM REVIEW UNDER THE AUTHORITY OF Michael Persyn, P.E. 96583 2/17/2017
THIS DOCUMENT IS NOT INTENDED FOR BIDDING, PERMITTING AND/OR CONSTRUCTION PURPOSES

70% SUBMITTAL

No.	Revision	Drawn	Approved	Date

REVISIONS

TALLEY ROAD WATER PLANS

WATERLINE A - PLAN AND PROFILE
STA 13+00 TO STA 17+00

DEVELOPER:
CONT. BUDGET PROJ.
SUBMITTED
APPROVED
MAP No.
SECT. No.
DR. CK. JOB No. 16-5020
SHEET 8 OF 31

TRENCH EXCAVATION SAFETY PROTECTION
CONTRACTOR AND/OR CONTRACTOR'S INDEPENDENTLY RETAINED EMPLOYEE OR STRUCTURAL DESIGN/GEOTECHNICAL/SAFETY/EQUIPMENT CONSULTANT, IF ANY SHALL REVIEW THESE PLANS AND AVAILABLE GEOTECHNICAL INFORMATION AND THE ANTICIPATED INSTALLATION SITE(S) WITHIN THE PROJECT WORK AREA IN ORDER TO IMPLEMENT CONTRACTOR'S TRENCH EXCAVATION SAFETY PROTECTION SYSTEM, PROGRAMS AND/OR PROCEDURES, THE CONTRACTOR'S IMPLEMENTATION OF THE SYSTEMS, PROGRAMS AND/OR PROCEDURES SHALL PROVIDE FOR ADEQUATE TRENCH EXCAVATION SAFETY PROTECTION THAT COMPLIES WITH AS A MINIMUM, OSHA STANDARDS FOR TRENCH EXCAVATIONS. SPECIFICALLY, CONTRACTOR AND/OR CONTRACTOR'S INDEPENDENTLY RETAINED EMPLOYEE OF SAFETY CONSULTANT SHALL IMPLEMENT A TRENCH SAFETY PROGRAM IN ACCORDANCE WITH OSHA STANDARDS GOVERNING THE PRESENCE AND ACTIVITIES OF INDIVIDUALS WORKING IN AND AROUND TRENCH EXCAVATION.

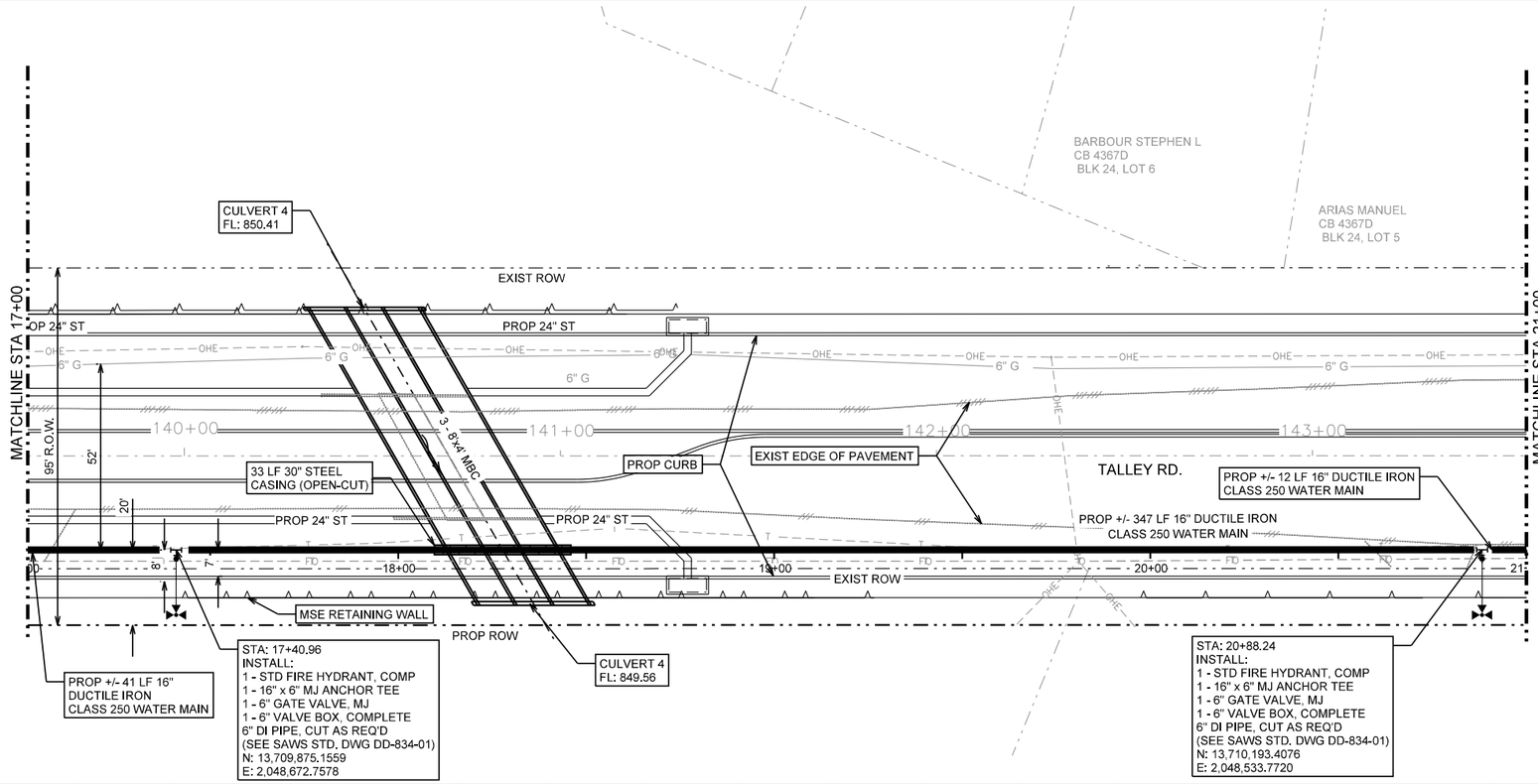

LEGEND

- PROP. WATER MAIN
- EXIST. WATER MAIN — 6" C.I.W.
- GAS MAIN — 2" G
- SANITARY SEWER — 8" SA
- STORM SEWER — 24" ST
- UTILITY POLE LINE
- ELECTRIC CABLE — E
- TELEPHONE CABLE — T
- DUAL BRANCH SERV.
- NEW UNMETERED SERVICE:
  - 3/4" SINGLE
  - 1" DUAL
- SERVICE RECONNECT:
  - 3/4"
  - 1" OR LARGER
- SERVICE RELAY:
  - 3/4"
  - 1" OR LARGER
- SERVICE RELOCATE:
  - 3/4"
  - 1" OR LARGER
- RELOCATE METER
- NEW SERVICE:
  - 3/4"
  - 1" OR LARGER

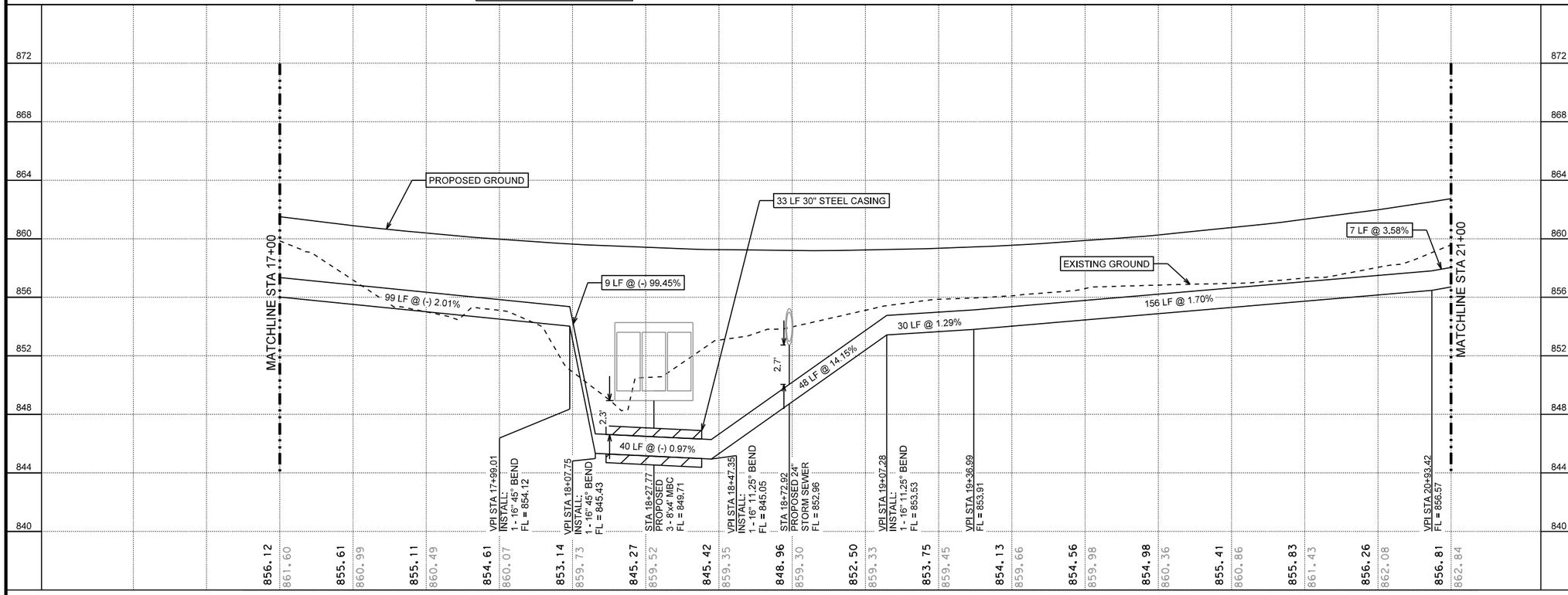

HORIZONTAL SCALE
0 20' 40'
0 4' 8'
VERTICAL SCALE

70% SUBMITTAL

THIS DOCUMENT IS RELEASED FOR THE PURPOSE OF INTERIM REVIEW UNDER THE AUTHORITY OF Michael Persyn, P.E. 96583 2/17/2017
THIS DOCUMENT IS NOT INTENDED FOR BIDDING, PERMITTING AND/OR CONSTRUCTION PURPOSES

70% SUBMITTAL

No.	Revision	Drawn	Approved	Date

REVISIONS

TALLEY ROAD WATER PLANS

WATERLINE A - PLAN AND PROFILE
STA 17+00 TO STA 21+00

DEVELOPER:
CONT. | BUDGET PROJ.
SUBMITTED
APPROVED
MAP No.
SECT. No.
DR. | CK. | JOB No. 16-5020
SHEET 9 OF 31

TRENCH EXCAVATION SAFETY PROTECTION
CONTRACTOR AND/OR CONTRACTOR'S INDEPENDENTLY RETAINED EMPLOYEE OR STRUCTURAL DESIGN/GEOTECHNICAL/SAFETY/EQUIPMENT CONSULTANT, IF ANY SHALL REVIEW THESE PLANS AND AVAILABLE GEOTECHNICAL INFORMATION AND THE ANTICIPATED INSTALLATION SITE(S) WITHIN THE PROJECT WORK AREA IN ORDER TO IMPLEMENT CONTRACTOR'S TRENCH EXCAVATION SAFETY PROTECTION SYSTEM, PROGRAMS AND/OR PROCEDURES, THE CONTRACTOR'S IMPLEMENTATION OF THE SYSTEMS, PROGRAMS AND/OR PROCEDURES SHALL PROVIDE FOR ADEQUATE TRENCH EXCAVATION SAFETY PROTECTION THAT COMPLIES WITH AS A MINIMUM, OSHA STANDARDS FOR TRENCH EXCAVATIONS. SPECIFICALLY, CONTRACTOR AND/OR CONTRACTOR'S INDEPENDENTLY RETAINED EMPLOYEE OF SAFETY CONSULTANT SHALL IMPLEMENT A TRENCH SAFETY PROGRAM IN ACCORDANCE WITH OSHA STANDARDS GOVERNING THE PRESENCE AND ACTIVITIES OF INDIVIDUALS WORKING IN AND AROUND TRENCH EXCAVATION.

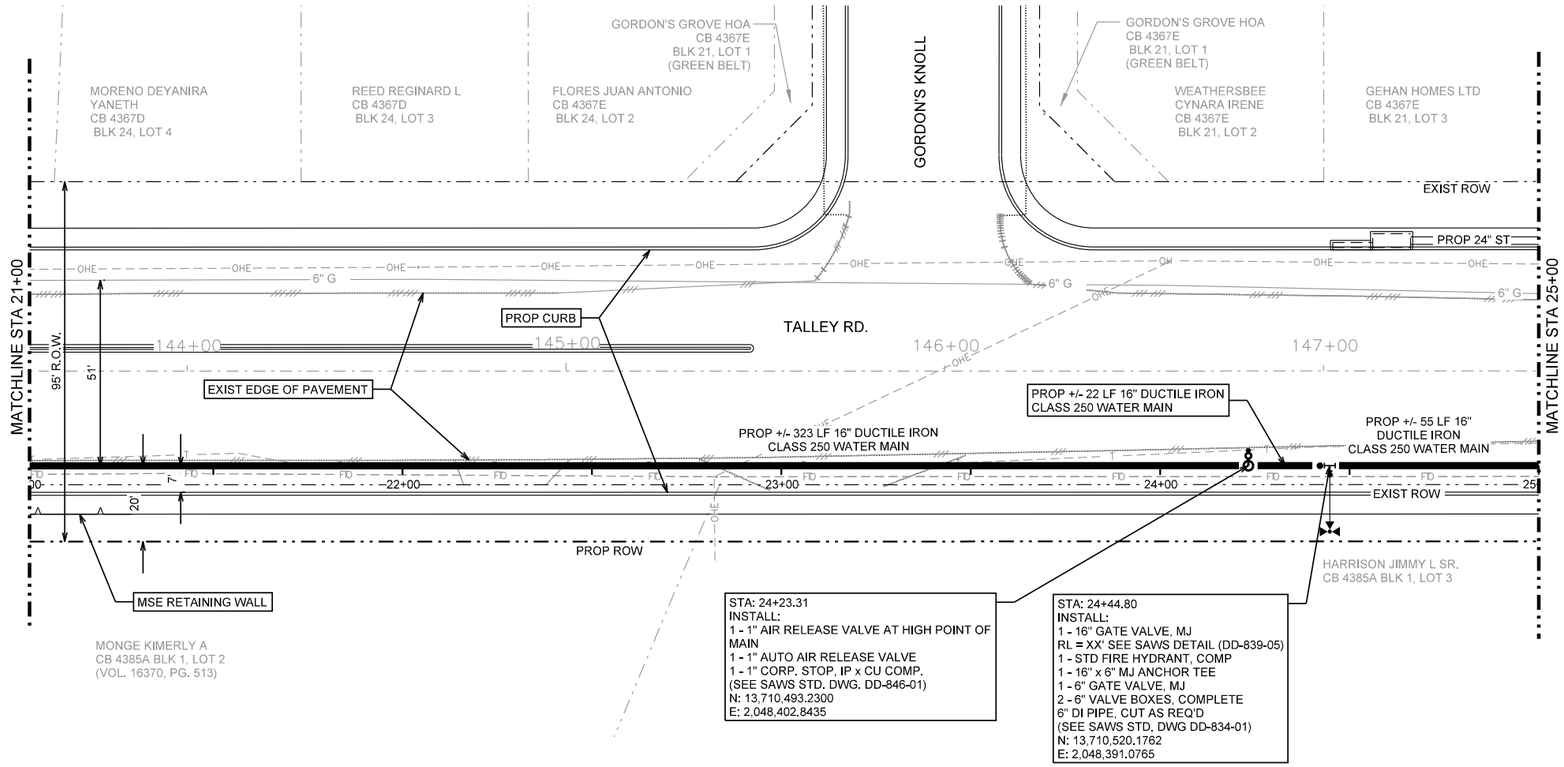

LEGEND

- PROP. WATER MAIN
- EXIST. WATER MAIN — 6"C.I.W.
- GAS MAIN — 2"G
- SANITARY SEWER — 8"SA
- STORM SEWER — 24"ST
- UTILITY POLE LINE
- ELECTRIC CABLE — E
- TELEPHONE CABLE — T
- DUAL BRANCH SERV.
- NEW UNMETERED SERVICE:
  - 3/4" SINGLE
  - 1" DUAL
- SERVICE RECONNECT:
  - 3/4"
  - 1" OR LARGER
- SERVICE RELAY:
  - 3/4"
  - 1" OR LARGER
- SERVICE RELOCATE:
  - 3/4"
  - 1" OR LARGER
- RELOCATE METER
- NEW SERVICE:
  - 3/4"
  - 1" OR LARGER

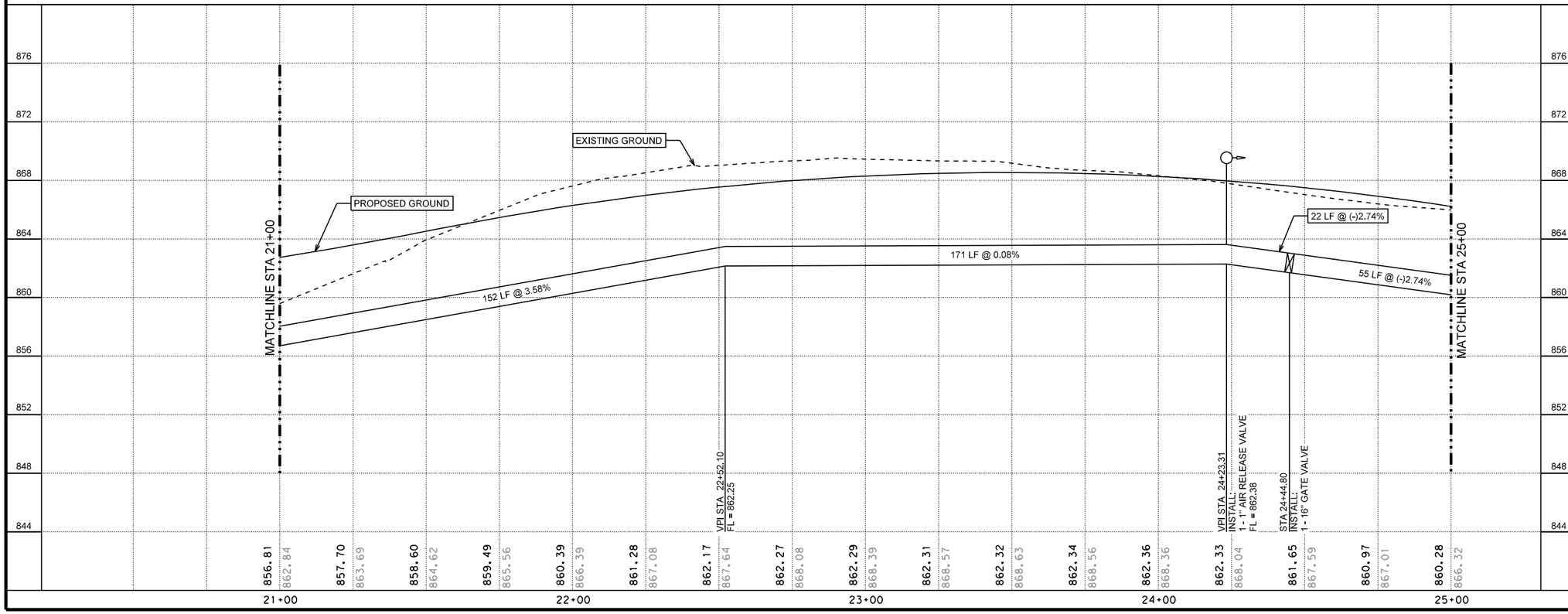

HORIZONTAL SCALE
0 20' 40'
0 4' 8'
VERTICAL SCALE

70% SUBMITTAL

THIS DOCUMENT IS RELEASED FOR THE PURPOSE OF INTERIM REVIEW UNDER THE AUTHORITY OF Michael Persyn, P.E. 96583 2/17/2017
THIS DOCUMENT IS NOT INTENDED FOR BIDDING, PERMITTING AND/OR CONSTRUCTION PURPOSES

70% SUBMITTAL

No.	Revision	Drawn	Approved	Date

REVISIONS

TALLEY ROAD WATER PLANS

WATERLINE A - PLAN AND PROFILE
STA 21+00 TO STA 25+00

DEVELOPER:
CONT. | BUDGET PROJ.
SUBMITTED
APPROVED

MAP No. | SHEET 10 OF 31
SECT. No.
DR. | CK. | JOB No. 16-5020

TRENCH EXCAVATION SAFETY PROTECTION
CONTRACTOR AND/OR CONTRACTOR'S INDEPENDENTLY RETAINED EMPLOYEE OR STRUCTURAL DESIGN/GEOTECHNICAL/SAFETY/EQUIPMENT CONSULTANT, IF ANY SHALL REVIEW THESE PLANS AND AVAILABLE GEOTECHNICAL INFORMATION AND THE ANTICIPATED INSTALLATION SITE(S) WITHIN THE PROJECT WORK AREA IN ORDER TO IMPLEMENT CONTRACTOR'S TRENCH EXCAVATION SAFETY PROTECTION SYSTEM, PROGRAMS AND/OR PROCEDURES, THE CONTRACTOR'S IMPLEMENTATION OF THE SYSTEMS, PROGRAMS AND/OR PROCEDURES SHALL PROVIDE FOR ADEQUATE TRENCH EXCAVATION SAFETY PROTECTION THAT COMPLIES WITH AS A MINIMUM, OSHA STANDARDS FOR TRENCH EXCAVATIONS. SPECIFICALLY, CONTRACTOR AND/OR CONTRACTOR'S INDEPENDENTLY RETAINED EMPLOYEE OF SAFETY CONSULTANT SHALL IMPLEMENT A TRENCH SAFETY PROGRAM IN ACCORDANCE WITH OSHA STANDARDS GOVERNING THE PRESENCE AND ACTIVITIES OF INDIVIDUALS WORKING IN AND AROUND TRENCH EXCAVATION.

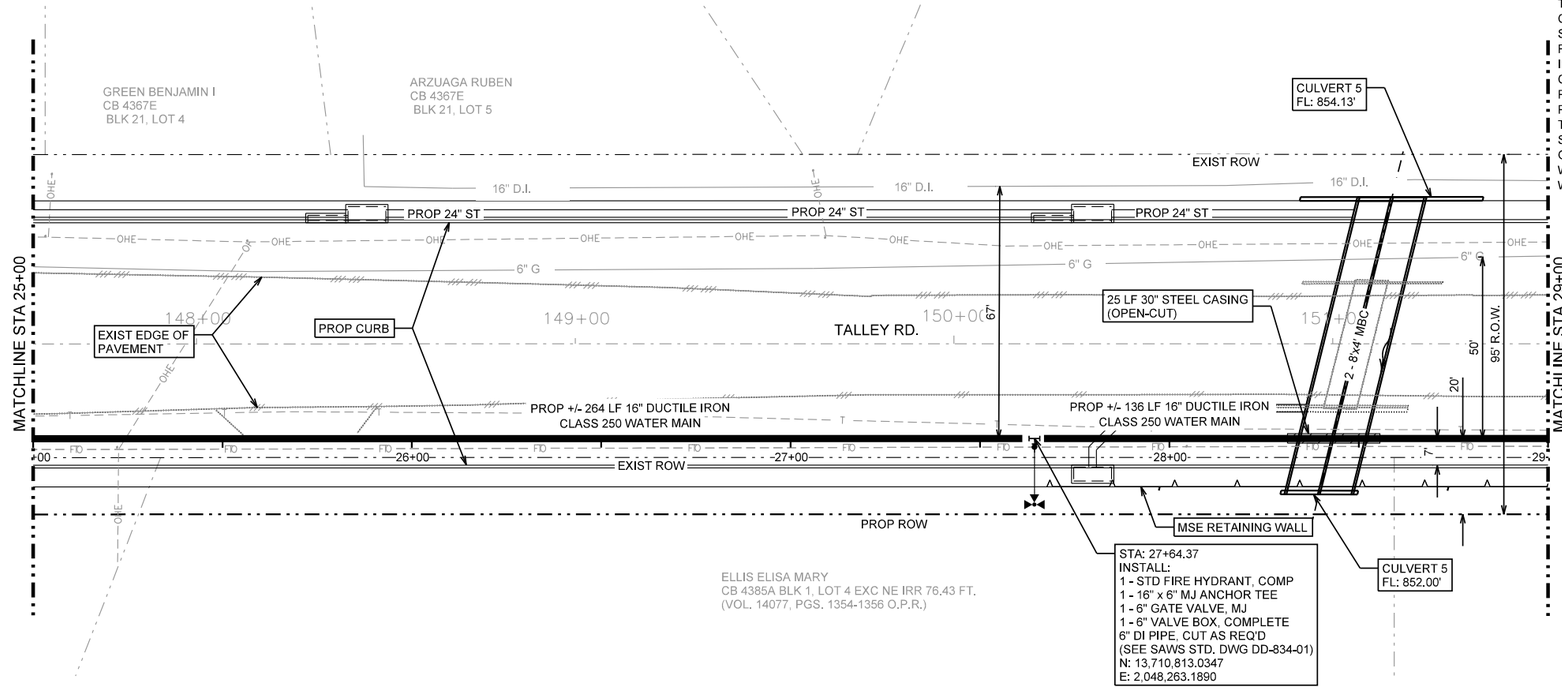

LEGEND

- PROP. WATER MAIN
- EXIST. WATER MAIN — 6"C.I.W.
- GAS MAIN — 2"G
- SANITARY SEWER — 8"SA
- STORM SEWER — 24"ST
- UTILITY POLE LINE
- ELECTRIC CABLE — E
- TELEPHONE CABLE — T
- DUAL BRANCH SERV.
- NEW UNMETERED SERVICE:
  - 3/4" SINGLE
  - 1" DUAL
- SERVICE RECONNECT:
  - 3/4"
  - 1" OR LARGER
- SERVICE RELAY:
  - 3/4"
  - 1" OR LARGER
- SERVICE RELOCATE:
  - 3/4"
  - 1" OR LARGER
- RELOCATE METER
- NEW SERVICE:
  - 3/4"
  - 1" OR LARGER

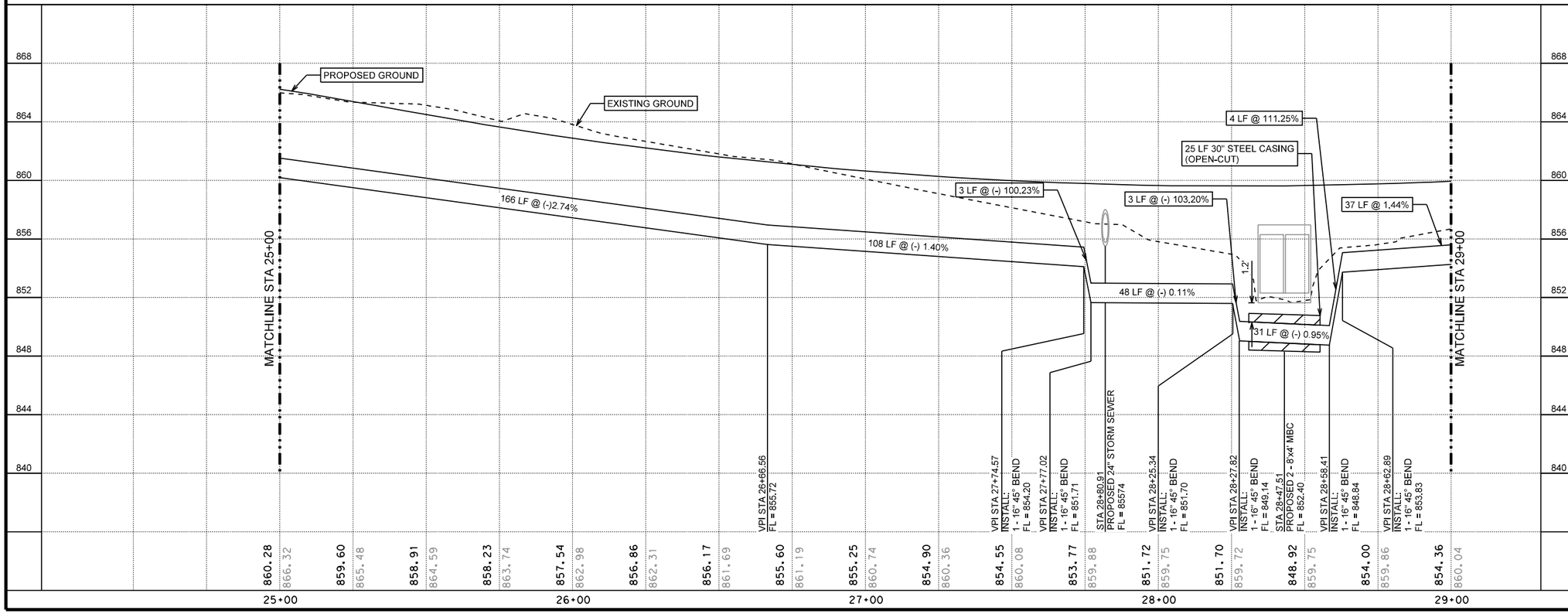

HORIZONTAL SCALE
0 20' 40'
0 4' 8'
VERTICAL SCALE

70% SUBMITTAL

THIS DOCUMENT IS RELEASED FOR THE PURPOSE OF INTERIM REVIEW UNDER THE AUTHORITY OF Michael Persyn, P.E. 96583 2/17/2017
THIS DOCUMENT IS NOT INTENDED FOR BIDDING, PERMITTING AND/OR CONSTRUCTION PURPOSES

70% SUBMITTAL

No.	Revision	Drawn	Approved	Date

REVISIONS

TALLEY ROAD WATER PLANS

WATERLINE A - PLAN AND PROFILE
STA 25+00 TO STA 29+00

DEVELOPER:
CONT. | BUDGET PROJ.
SUBMITTED
APPROVED
MAP No.
SECT. No.
DR. | CK. | JOB No. 16-5020
SHEET 11 OF 31

TRENCH EXCAVATION SAFETY PROTECTION
CONTRACTOR AND/OR CONTRACTOR'S INDEPENDENTLY RETAINED EMPLOYEE OR STRUCTURAL DESIGN/GEOTECHNICAL/SAFETY/EQUIPMENT CONSULTANT, IF ANY SHALL REVIEW THESE PLANS AND AVAILABLE GEOTECHNICAL INFORMATION AND THE ANTICIPATED INSTALLATION SITE(S) WITHIN THE PROJECT WORK AREA IN ORDER TO IMPLEMENT CONTRACTOR'S TRENCH EXCAVATION SAFETY PROTECTION SYSTEM, PROGRAMS AND/OR PROCEDURES, THE CONTRACTOR'S IMPLEMENTATION OF THE SYSTEMS, PROGRAMS AND/OR PROCEDURES SHALL PROVIDE FOR ADEQUATE TRENCH EXCAVATION SAFETY PROTECTION THAT COMPLIES WITH AS A MINIMUM, OSHA STANDARDS FOR TRENCH EXCAVATIONS. SPECIFICALLY, CONTRACTOR AND/OR CONTRACTOR'S INDEPENDENTLY RETAINED EMPLOYEE OF SAFETY CONSULTANT SHALL IMPLEMENT A TRENCH SAFETY PROGRAM IN ACCORDANCE WITH OSHA STANDARDS GOVERNING THE PRESENCE AND ACTIVITIES OF INDIVIDUALS WORKING IN AND AROUND TRENCH EXCAVATION.

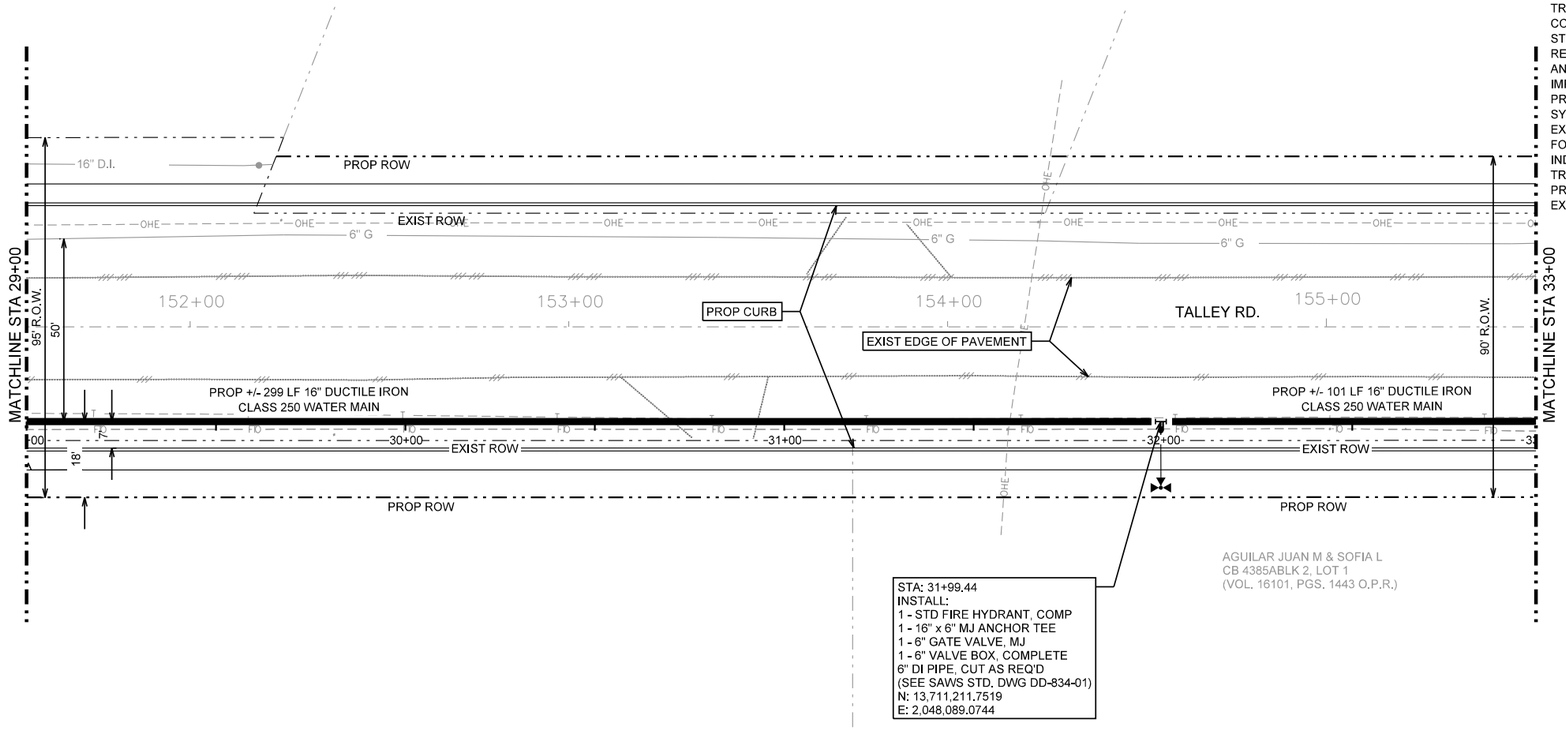

LEGEND

- PROP. WATER MAIN
- EXIST. WATER MAIN — 6"C.I.W.
- GAS MAIN — 2"G
- SANITARY SEWER — 8"SA
- STORM SEWER — 24"ST
- UTILITY POLE LINE
- ELECTRIC CABLE — E
- TELEPHONE CABLE — T
- DUAL BRANCH SERV.
- NEW UNMETERED SERVICE:
  - 3/4" SINGLE
  - 1" DUAL
- SERVICE RECONNECT:
  - 3/4"
  - 1" OR LARGER
- SERVICE RELAY:
  - 3/4"
  - 1" OR LARGER
- SERVICE RELOCATE:
  - 3/4"
  - 1" OR LARGER
- RELOCATE METER
- NEW SERVICE:
  - 3/4"
  - 1" OR LARGER

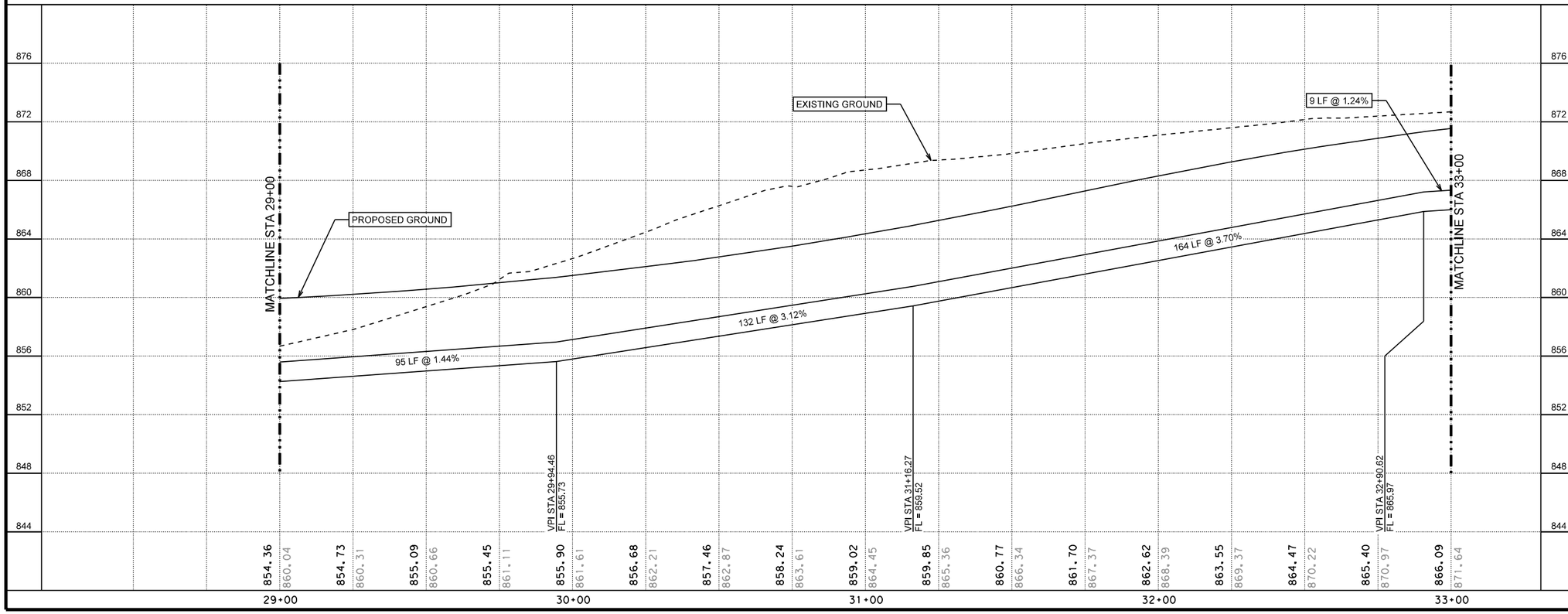

HORIZONTAL SCALE
0 20' 40'
0 4' 8'
VERTICAL SCALE

70% SUBMITTAL

THIS DOCUMENT IS RELEASED FOR THE PURPOSE OF INTERIM REVIEW UNDER THE AUTHORITY OF Michael Persyn, P.E. 96583 2/17/2017
THIS DOCUMENT IS NOT INTENDED FOR BIDDING, PERMITTING AND/OR CONSTRUCTION PURPOSES

70% SUBMITTAL

No.	Revision	Drawn	Approved	Date

REVISIONS

TALLEY ROAD WATER PLANS

WATERLINE A - PLAN AND PROFILE STA 29+00 TO STA 33+00

DEVELOPER:
CONT. | BUDGET PROJ.
SUBMITTED
APPROVED

MAP No. | SHEET 12
SECT. No. | OF 31
DR. | CK. | JOB No. 16-5020

TRENCH EXCAVATION SAFETY PROTECTION
CONTRACTOR AND/OR CONTRACTOR'S INDEPENDENTLY RETAINED EMPLOYEE OR STRUCTURAL DESIGN/GEOTECHNICAL/SAFETY/EQUIPMENT CONSULTANT, IF ANY SHALL REVIEW THESE PLANS AND AVAILABLE GEOTECHNICAL INFORMATION AND THE ANTICIPATED INSTALLATION SITE(S) WITHIN THE PROJECT WORK AREA IN ORDER TO IMPLEMENT CONTRACTOR'S TRENCH EXCAVATION SAFETY PROTECTION SYSTEM, PROGRAMS AND/OR PROCEDURES, THE CONTRACTOR'S IMPLEMENTATION OF THE SYSTEMS, PROGRAMS AND/OR PROCEDURES SHALL PROVIDE FOR ADEQUATE TRENCH EXCAVATION SAFETY PROTECTION THAT COMPLIES WITH AS A MINIMUM, OSHA STANDARDS FOR TRENCH EXCAVATIONS. SPECIFICALLY, CONTRACTOR AND/OR CONTRACTOR'S INDEPENDENTLY RETAINED EMPLOYEE OF SAFETY CONSULTANT SHALL IMPLEMENT A TRENCH SAFETY PROGRAM IN ACCORDANCE WITH OSHA STANDARDS GOVERNING THE PRESENCE AND ACTIVITIES OF INDIVIDUALS WORKING IN AND AROUND TRENCH EXCAVATION.

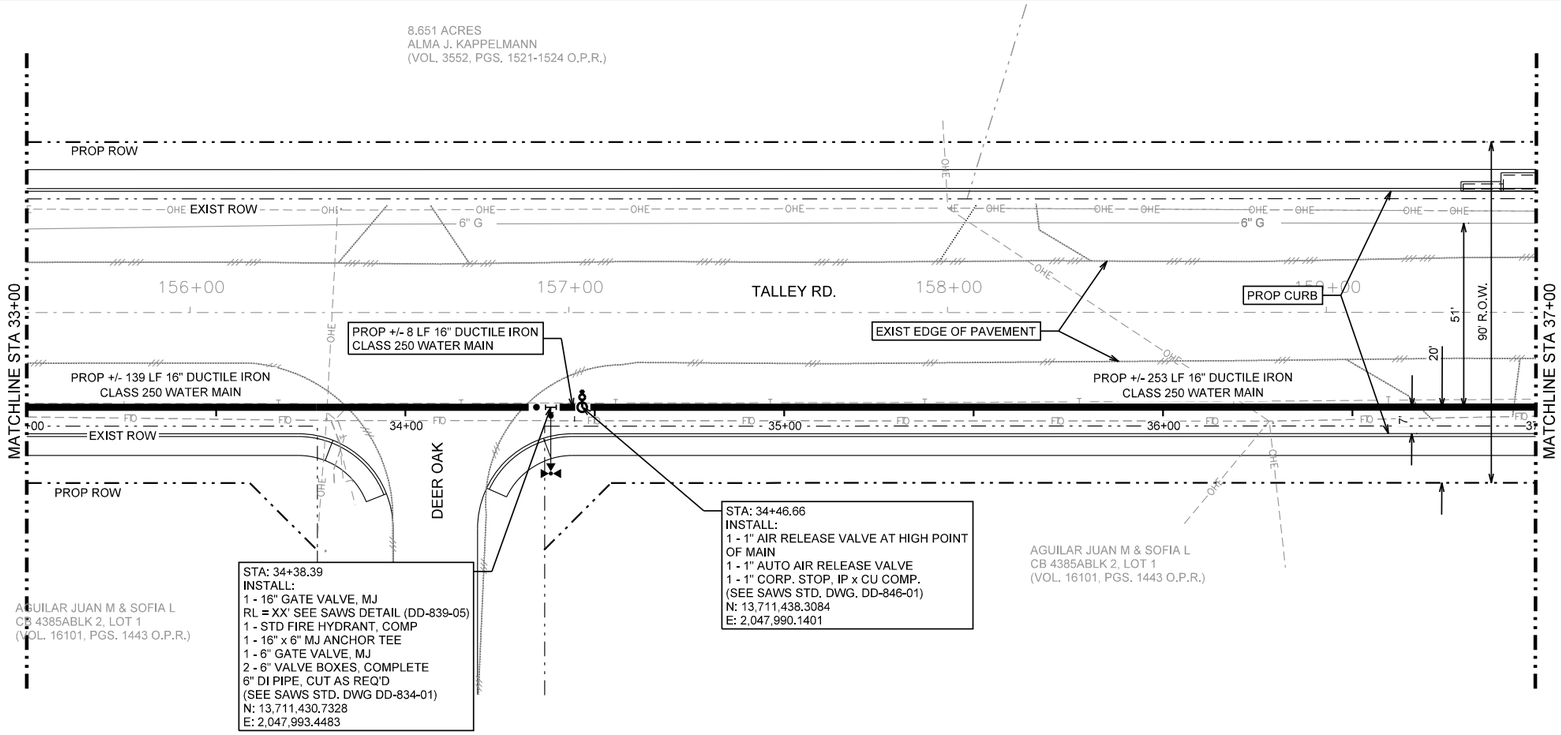

LEGEND

- PROP. WATER MAIN
- EXIST. WATER MAIN — 6"C.I.W.
- GAS MAIN — 2"G
- SANITARY SEWER — 8"SA
- STORM SEWER — 24"ST
- UTILITY POLE LINE
- ELECTRIC CABLE — E
- TELEPHONE CABLE — T
- DUAL BRANCH SERV.
- NEW UNMETERED SERVICE:
  - 3/4" SINGLE
  - 1" DUAL
- SERVICE RECONNECT:
  - 3/4"
  - 1" OR LARGER
- SERVICE RELAY:
  - 3/4"
  - 1" OR LARGER
- SERVICE RELOCATE:
  - 3/4"
  - 1" OR LARGER
- RELOCATE METER
- NEW SERVICE:
  - 3/4"
  - 1" OR LARGER

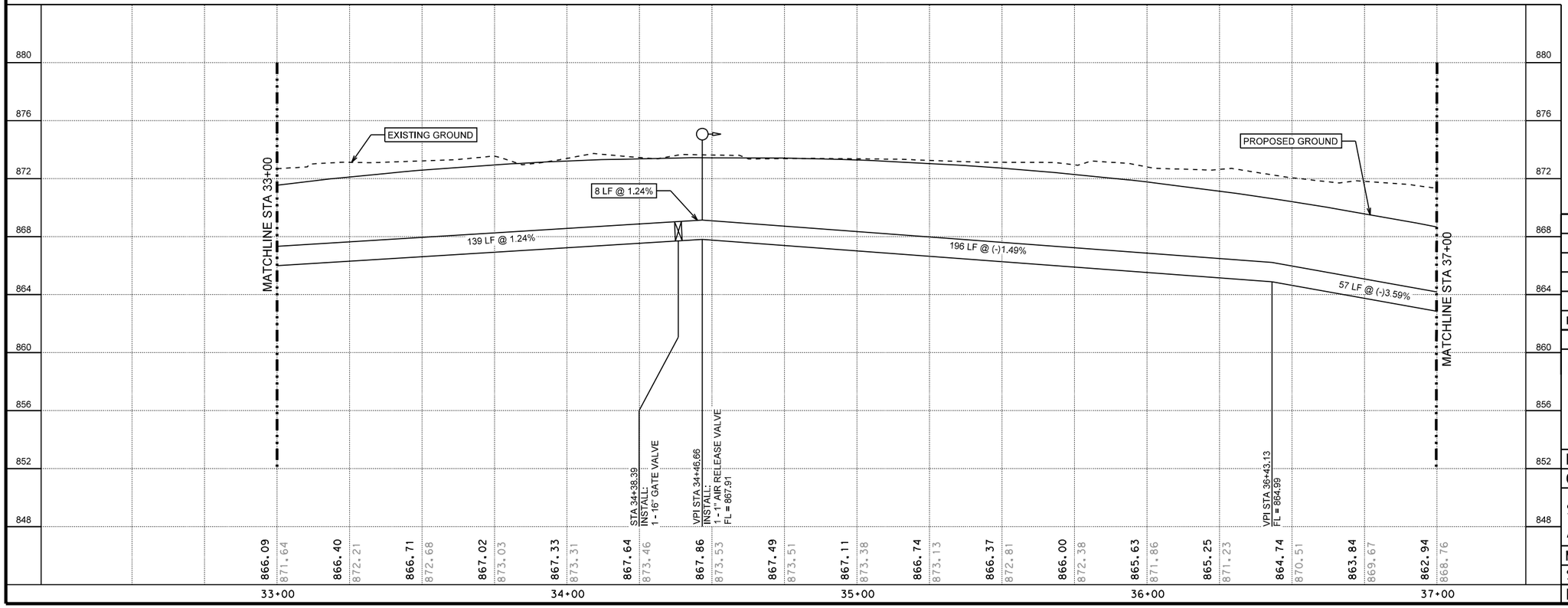

HORIZONTAL SCALE
0 20' 40'
0 4' 8'
VERTICAL SCALE

70% SUBMITTAL

THIS DOCUMENT IS RELEASED FOR THE PURPOSE OF INTERIM REVIEW UNDER THE AUTHORITY OF Michael Persyn, P.E. 96583 2/17/2017
THIS DOCUMENT IS NOT INTENDED FOR BIDDING, PERMITTING AND/OR CONSTRUCTION PURPOSES

70% SUBMITTAL

No.	Revision	Drawn	Approved	Date

REVISIONS

TALLEY ROAD WATER PLANS

WATERLINE A - PLAN AND PROFILE
STA 33+00 TO STA 37+00

DEVELOPER:
CONT. | BUDGET PROJ.
SUBMITTED
APPROVED
MAP No.
SECT. No.
DR. | CK. | JOB No. 16-5020
SHEET 13 OF 31

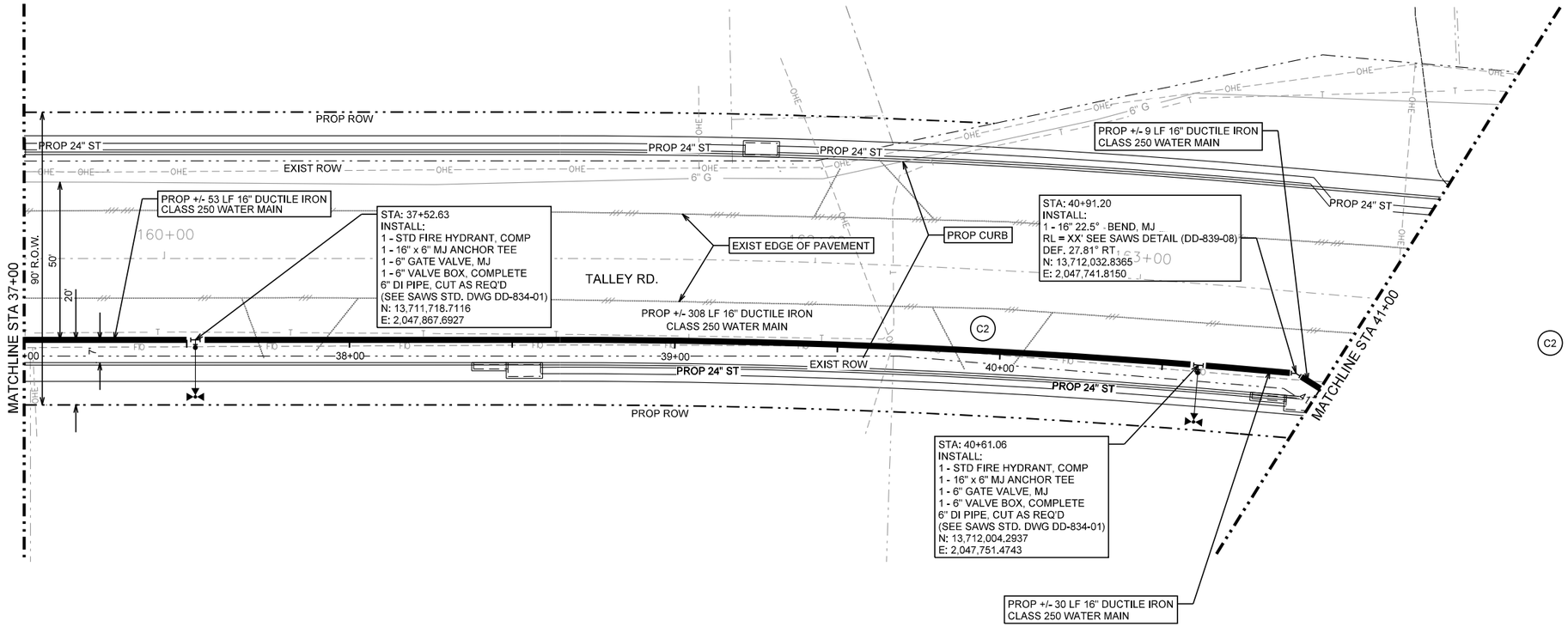

TRENCH EXCAVATION SAFETY PROTECTION
CONTRACTOR AND/OR CONTRACTOR'S INDEPENDENTLY RETAINED EMPLOYEE OR STRUCTURAL DESIGN/GEOTECHNICAL/SAFETY/EQUIPMENT CONSULTANT, IF ANY SHALL REVIEW THESE PLANS AND AVAILABLE GEOTECHNICAL INFORMATION AND THE ANTICIPATED INSTALLATION SITE(S) WITHIN THE PROJECT WORK AREA IN ORDER TO IMPLEMENT CONTRACTOR'S TRENCH EXCAVATION SAFETY PROTECTION SYSTEM, PROGRAMS AND/OR PROCEDURES, THE CONTRACTOR'S IMPLEMENTATION OF THE SYSTEMS, PROGRAMS AND/OR PROCEDURES SHALL PROVIDE FOR ADEQUATE TRENCH EXCAVATION SAFETY PROTECTION THAT COMPLIES WITH AS A MINIMUM, OSHA STANDARDS FOR TRENCH EXCAVATIONS. SPECIFICALLY, CONTRACTOR AND/OR CONTRACTOR'S INDEPENDENTLY RETAINED EMPLOYEE OF SAFETY CONSULTANT SHALL IMPLEMENT A TRENCH SAFETY PROGRAM IN ACCORDANCE WITH OSHA STANDARDS GOVERNING THE PRESENCE AND ACTIVITIES OF INDIVIDUALS WORKING IN AND AROUND TRENCH EXCAVATION.

C2 CURVE DATA

P.I. Station	39+78.04
Delta =	5° 14' 33.25" (RT)
Degree =	2° 18' 53.93"
Tangent =	113.3104
Length =	226.4627
Radius =	2,475.0000
External =	2.5924
Long Chord =	226.3837
Mid. Ord. =	2.5897
P.C. Station	38+64.73
P.T. Station	40+91.20

LEGEND

- PROP. WATER MAIN
- EXIST. WATER MAIN — 6"C.I.
- GAS MAIN — 2"G
- SANITARY SEWER — 8"SA
- STORM SEWER — 24"ST
- UTILITY POLE LINE
- ELECTRIC CABLE — E
- TELEPHONE CABLE — T
- DUAL BRANCH SERV.
- NEW UNMETERED SERVICE:
  - 3/4" SINGLE
  - 1" DUAL
- SERVICE RECONNECT:
  - 3/4"
  - 1" OR LARGER
- SERVICE RELAY:
  - 3/4"
  - 1" OR LARGER
- SERVICE RELOCATE:
  - 3/4"
  - 1" OR LARGER
- RELOCATE METER
- NEW SERVICE:
  - 3/4"
  - 1" OR LARGER

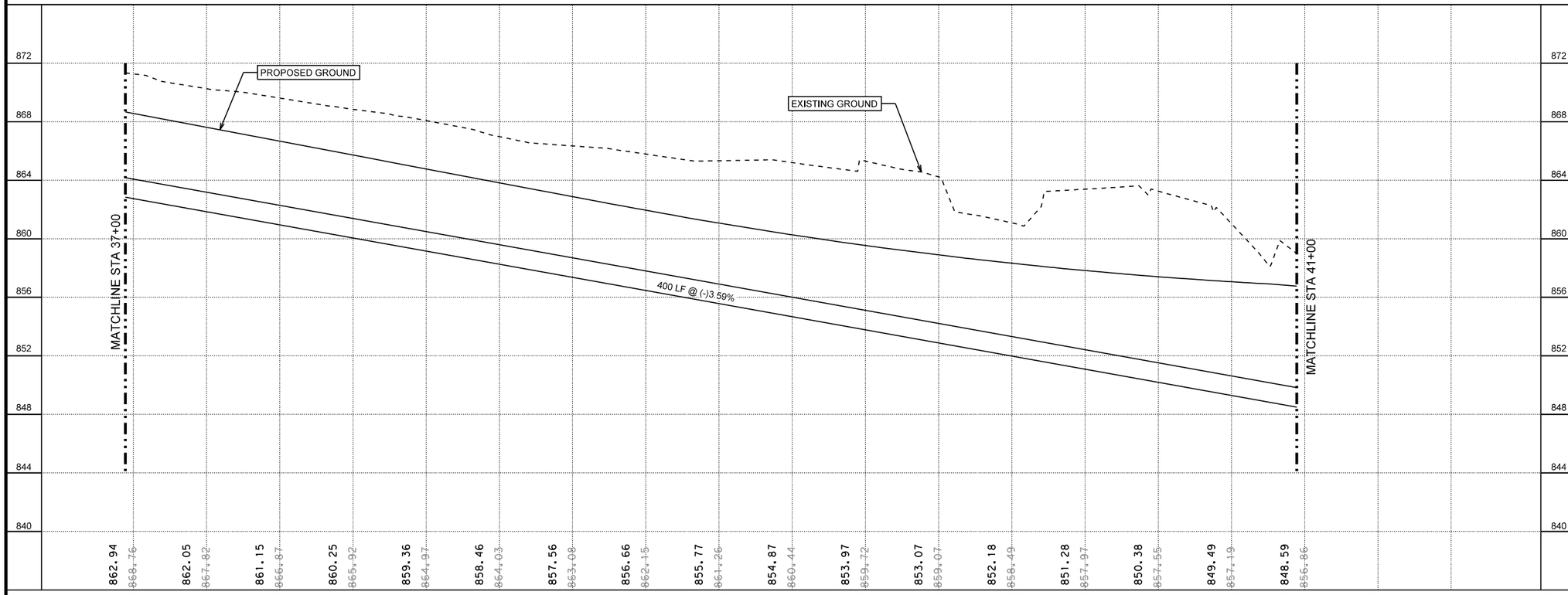

HORIZONTAL SCALE
0 20' 40'
VERTICAL SCALE
0 4' 8'

70% SUBMITTAL

THIS DOCUMENT IS RELEASED FOR THE PURPOSE OF INTERIM REVIEW UNDER THE AUTHORITY OF Michael Persyn, P.E. 96583 2/17/2017

THIS DOCUMENT IS NOT INTENDED FOR BIDDING, PERMITTING AND/OR CONSTRUCTION PURPOSES

70% SUBMITTAL

No.	Revision	Drawn	Approved	Date

REVISIONS

TALLEY ROAD WATER PLANS

WATERLINE A - PLAN AND PROFILE STA 37+00 TO STA 41+00

DEVELOPER:

CONT. | BUDGET PROJ.

SUBMITTED

APPROVED

MAP No. | SHEET

SECT. No. | 14

DR. | CK. | JOB No. 16-5020 | OF 31

TRENCH EXCAVATION SAFETY PROTECTION
CONTRACTOR AND/OR CONTRACTOR'S INDEPENDENTLY RETAINED EMPLOYEE OR STRUCTURAL DESIGN/GEOTECHNICAL/SAFETY/EQUIPMENT CONSULTANT, IF ANY SHALL REVIEW THESE PLANS AND AVAILABLE GEOTECHNICAL INFORMATION AND THE ANTICIPATED INSTALLATION SITE(S) WITHIN THE PROJECT WORK AREA IN ORDER TO IMPLEMENT CONTRACTOR'S TRENCH EXCAVATION SAFETY PROTECTION SYSTEM, PROGRAMS AND/OR PROCEDURES, THE CONTRACTOR'S IMPLEMENTATION OF THE SYSTEMS, PROGRAMS AND/OR PROCEDURES SHALL PROVIDE FOR ADEQUATE TRENCH EXCAVATION SAFETY PROTECTION THAT COMPLIES WITH AS A MINIMUM, OSHA STANDARDS FOR TRENCH EXCAVATIONS. SPECIFICALLY, CONTRACTOR AND/OR CONTRACTOR'S INDEPENDENTLY RETAINED EMPLOYEE OF SAFETY CONSULTANT SHALL IMPLEMENT A TRENCH SAFETY PROGRAM IN ACCORDANCE WITH OSHA STANDARDS GOVERNING THE PRESENCE AND ACTIVITIES OF INDIVIDUALS WORKING IN AND AROUND TRENCH EXCAVATION.

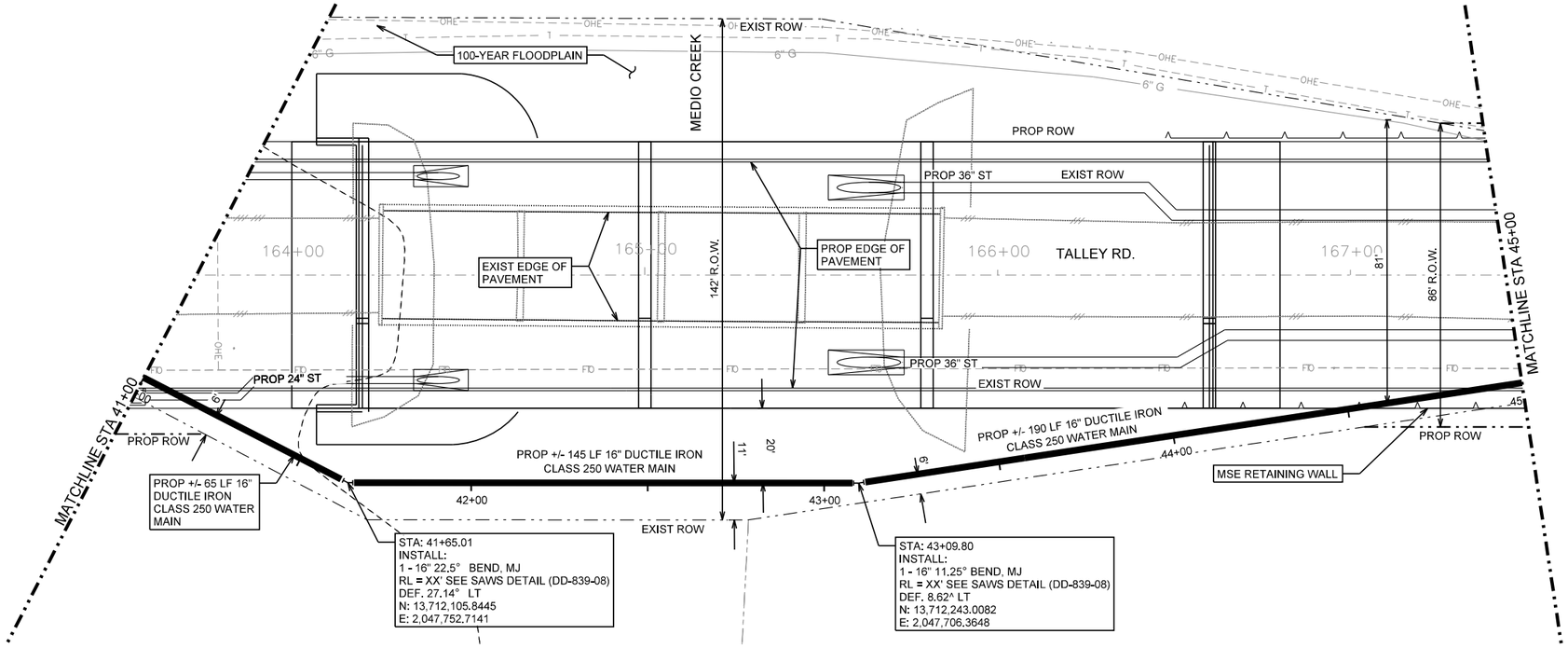

LEGEND

- PROP. WATER MAIN
- EXIST. WATER MAIN — 6"C.I.W.
- GAS MAIN — 2"G
- SANITARY SEWER — 8"SA
- STORM SEWER — 24"ST
- UTILITY POLE LINE
- ELECTRIC CABLE — E
- TELEPHONE CABLE — T
- DUAL BRANCH SERV.
- NEW UNMETERED SERVICE:
  - 3/4" SINGLE
  - 1" DUAL
- SERVICE RECONNECT:
  - 3/4"
  - 1" OR LARGER
- SERVICE RELAY:
  - 3/4"
  - 1" OR LARGER
- SERVICE RELOCATE:
  - 3/4"
  - 1" OR LARGER
- RELOCATE METER
- NEW SERVICE:
  - 3/4"
  - 1" OR LARGER

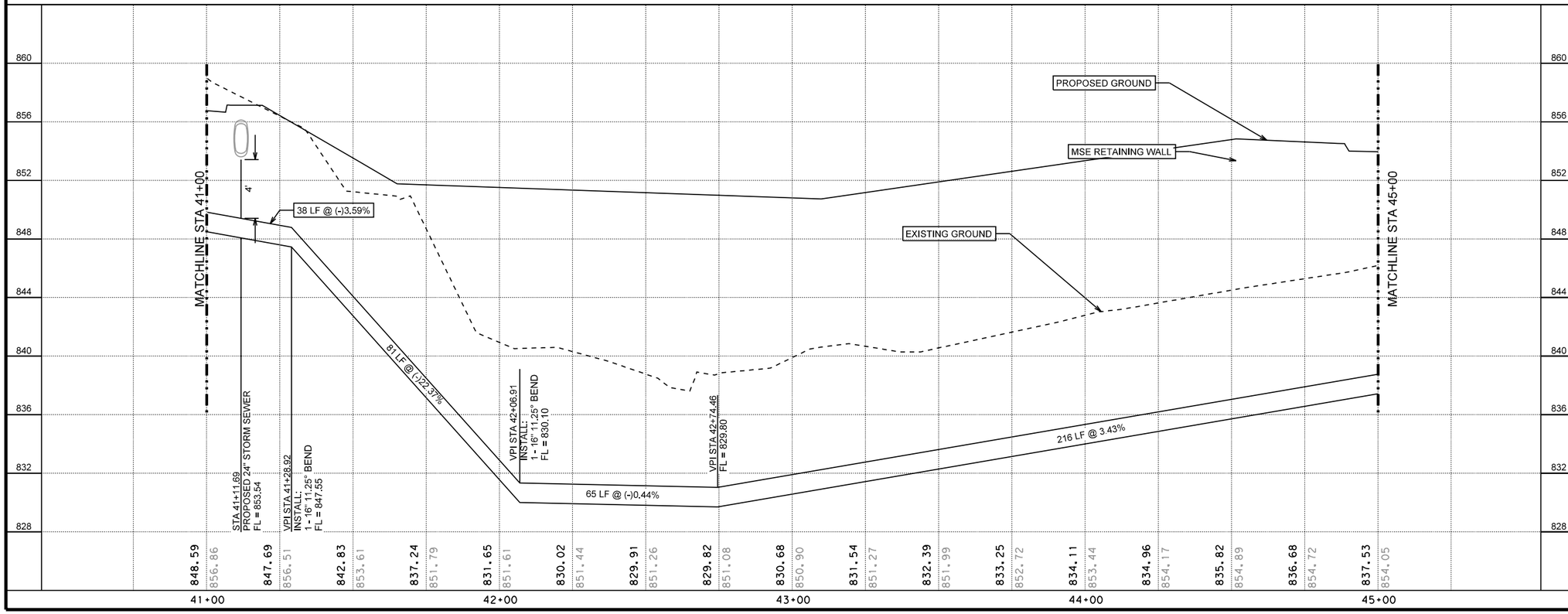

HORIZONTAL SCALE
0 20' 40'
0 4' 8'
VERTICAL SCALE

70% SUBMITTAL

THIS DOCUMENT IS RELEASED FOR THE PURPOSE OF INTERIM REVIEW UNDER THE AUTHORITY OF Michael Persyn, P.E. 96583 2/17/2017
THIS DOCUMENT IS NOT INTENDED FOR BIDDING, PERMITTING AND/OR CONSTRUCTION PURPOSES

70% SUBMITTAL

No.	Revision	Drawn	Approved	Date

REVISIONS

TALLEY ROAD WATER PLANS

WATERLINE A - PLAN AND PROFILE STA 41+00 TO STA 45+00

DEVELOPER:
CONT. BUDGET PROJ.
SUBMITTED
APPROVED
MAP No.
SECT. No.
DR. CK. JOB No. 16-5020
SHEET 15 OF 31

TRENCH EXCAVATION SAFETY PROTECTION
CONTRACTOR AND/OR CONTRACTOR'S INDEPENDENTLY RETAINED EMPLOYEE OR STRUCTURAL DESIGN/GEOTECHNICAL/SAFETY/EQUIPMENT CONSULTANT, IF ANY SHALL REVIEW THESE PLANS AND AVAILABLE GEOTECHNICAL INFORMATION AND THE ANTICIPATED INSTALLATION SITE(S) WITHIN THE PROJECT WORK AREA IN ORDER TO IMPLEMENT CONTRACTOR'S TRENCH EXCAVATION SAFETY PROTECTION SYSTEM, PROGRAMS AND/OR PROCEDURES. THE CONTRACTOR'S IMPLEMENTATION OF THE SYSTEMS, PROGRAMS AND/OR PROCEDURES SHALL PROVIDE FOR ADEQUATE TRENCH EXCAVATION SAFETY PROTECTION THAT COMPLIES WITH AS A MINIMUM, OSHA STANDARDS FOR TRENCH EXCAVATIONS. SPECIFICALLY, CONTRACTOR AND/OR CONTRACTOR'S INDEPENDENTLY RETAINED EMPLOYEE OF SAFETY CONSULTANT SHALL IMPLEMENT A TRENCH SAFETY PROGRAM IN ACCORDANCE WITH OSHA STANDARDS GOVERNING THE PRESENCE AND ACTIVITIES OF INDIVIDUALS WORKING IN AND AROUND TRENCH EXCAVATION.

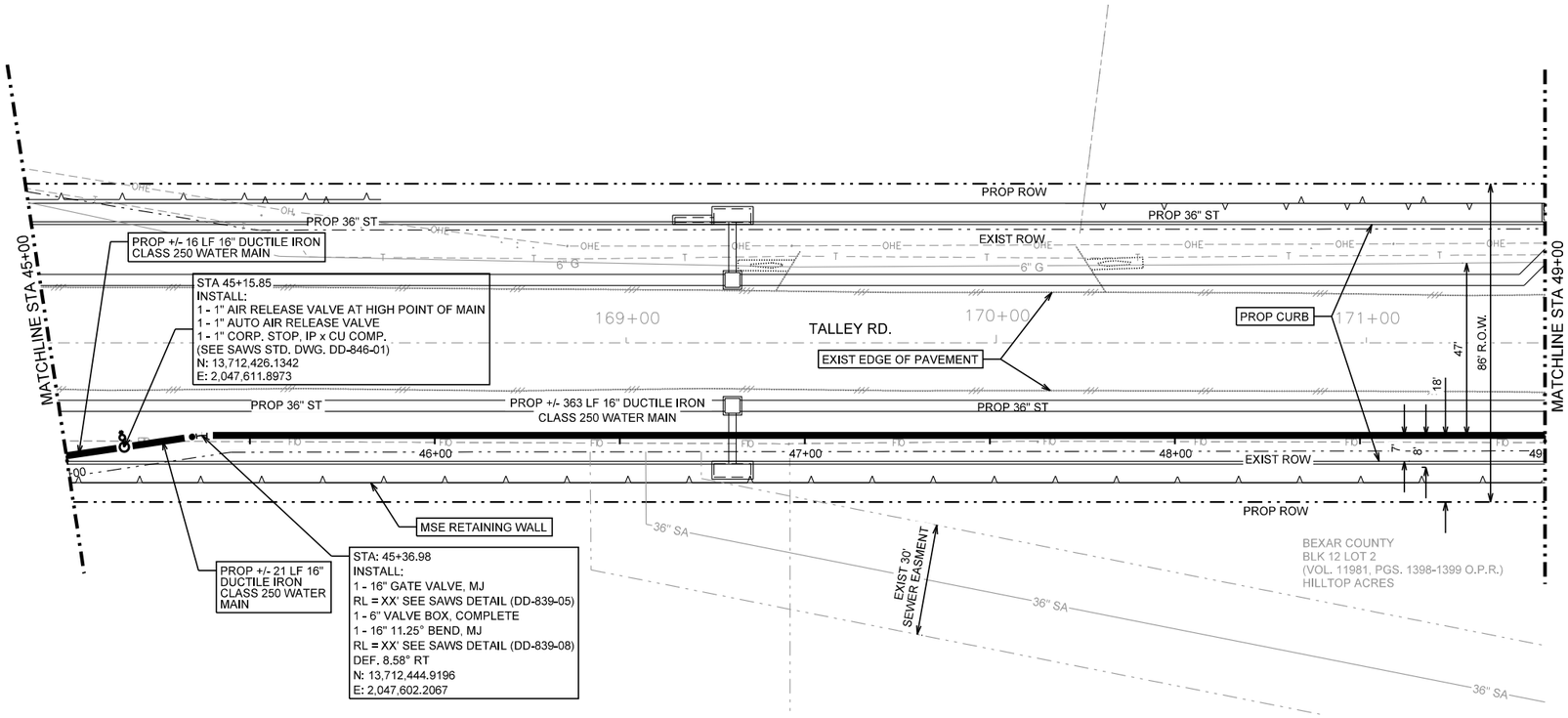

LEGEND

- PROP. WATER MAIN
- EXIST. WATER MAIN — 6"C.I.W.
- GAS MAIN — 2"G
- SANITARY SEWER — 8"SA
- STORM SEWER — 24"ST
- UTILITY POLE LINE
- ELECTRIC CABLE — E
- TELEPHONE CABLE — T
- DUAL BRANCH SERV.
- NEW UNMETERED SERVICE:
  - 3/4" SINGLE
  - 1" DUAL
- SERVICE RECONNECT:
  - 3/4"
  - 1" OR LARGER
- SERVICE RELAY:
  - 3/4"
  - 1" OR LARGER
- SERVICE RELOCATE:
  - 3/4"
  - 1" OR LARGER
- RELOCATE METER
- NEW SERVICE:
  - 3/4"
  - 1" OR LARGER

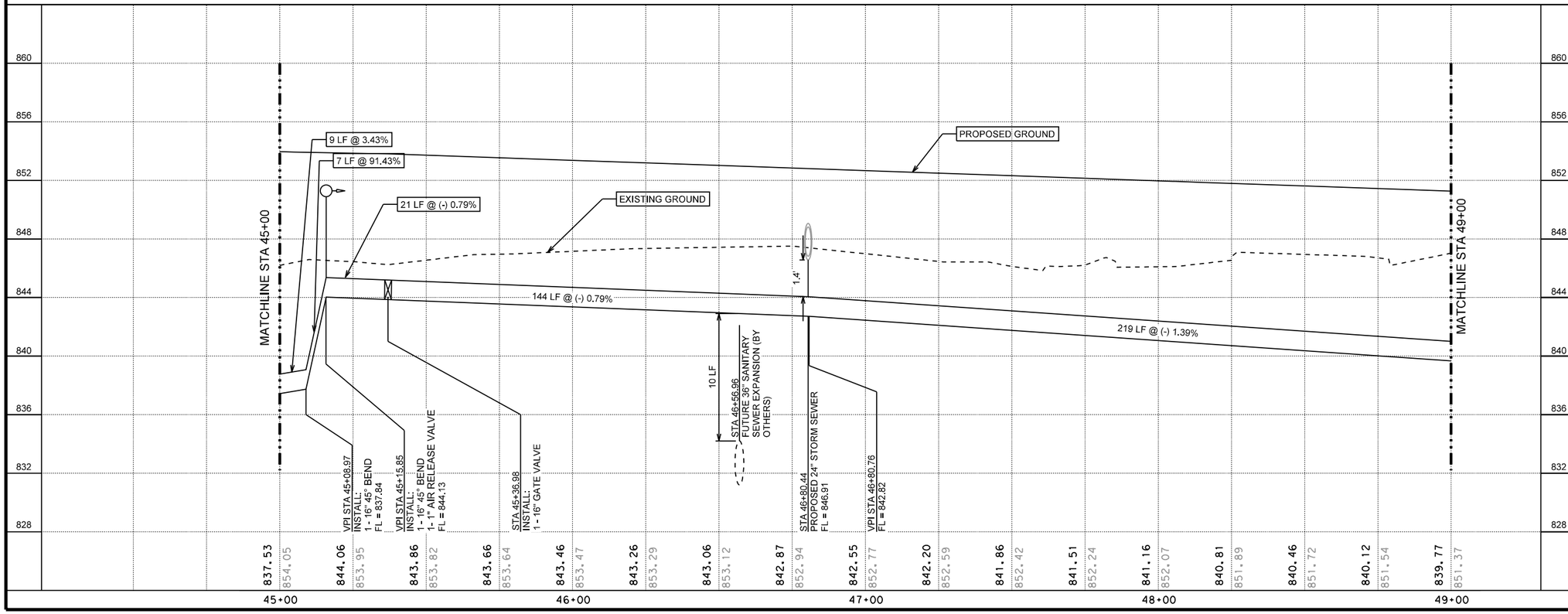

HORIZONTAL SCALE
0 20' 40'
0 4' 8'
VERTICAL SCALE

70% SUBMITTAL

THIS DOCUMENT IS RELEASED FOR THE PURPOSE OF INTERIM REVIEW UNDER THE AUTHORITY OF Michael Persyn, P.E. 96583 2/17/2017

THIS DOCUMENT IS NOT INTENDED FOR BIDDING, PERMITTING AND/OR CONSTRUCTION PURPOSES

70% SUBMITTAL

No.	Revision	Drawn	Approved	Date

REVISIONS

TALLEY ROAD WATER PLANS

WATERLINE A - PLAN AND PROFILE STA 45+00 TO STA 49+00

DEVELOPER:

CONT. | BUDGET PROJ.

SUBMITTED

APPROVED

MAP No. | SHEET 16

SECT. No. | OF 31

DR. | CK. | JOB No. 16-5020

TRENCH EXCAVATION SAFETY PROTECTION
CONTRACTOR AND/OR CONTRACTOR'S INDEPENDENTLY RETAINED EMPLOYEE OR STRUCTURAL DESIGN/GEOTECHNICAL/SAFETY/EQUIPMENT CONSULTANT, IF ANY SHALL REVIEW THESE PLANS AND AVAILABLE GEOTECHNICAL INFORMATION AND THE ANTICIPATED INSTALLATION SITE(S) WITHIN THE PROJECT WORK AREA IN ORDER TO IMPLEMENT CONTRACTOR'S TRENCH EXCAVATION SAFETY PROTECTION SYSTEM, PROGRAMS AND/OR PROCEDURES, THE CONTRACTOR'S IMPLEMENTATION OF THE SYSTEMS, PROGRAMS AND/OR PROCEDURES SHALL PROVIDE FOR ADEQUATE TRENCH EXCAVATION SAFETY PROTECTION THAT COMPLIES WITH AS A MINIMUM, OSHA STANDARDS FOR TRENCH EXCAVATIONS. SPECIFICALLY, CONTRACTOR AND/OR CONTRACTOR'S INDEPENDENTLY RETAINED EMPLOYEE OF SAFETY CONSULTANT SHALL IMPLEMENT A TRENCH SAFETY PROGRAM IN ACCORDANCE WITH OSHA STANDARDS GOVERNING THE PRESENCE AND ACTIVITIES OF INDIVIDUALS WORKING IN AND AROUND TRENCH EXCAVATION.

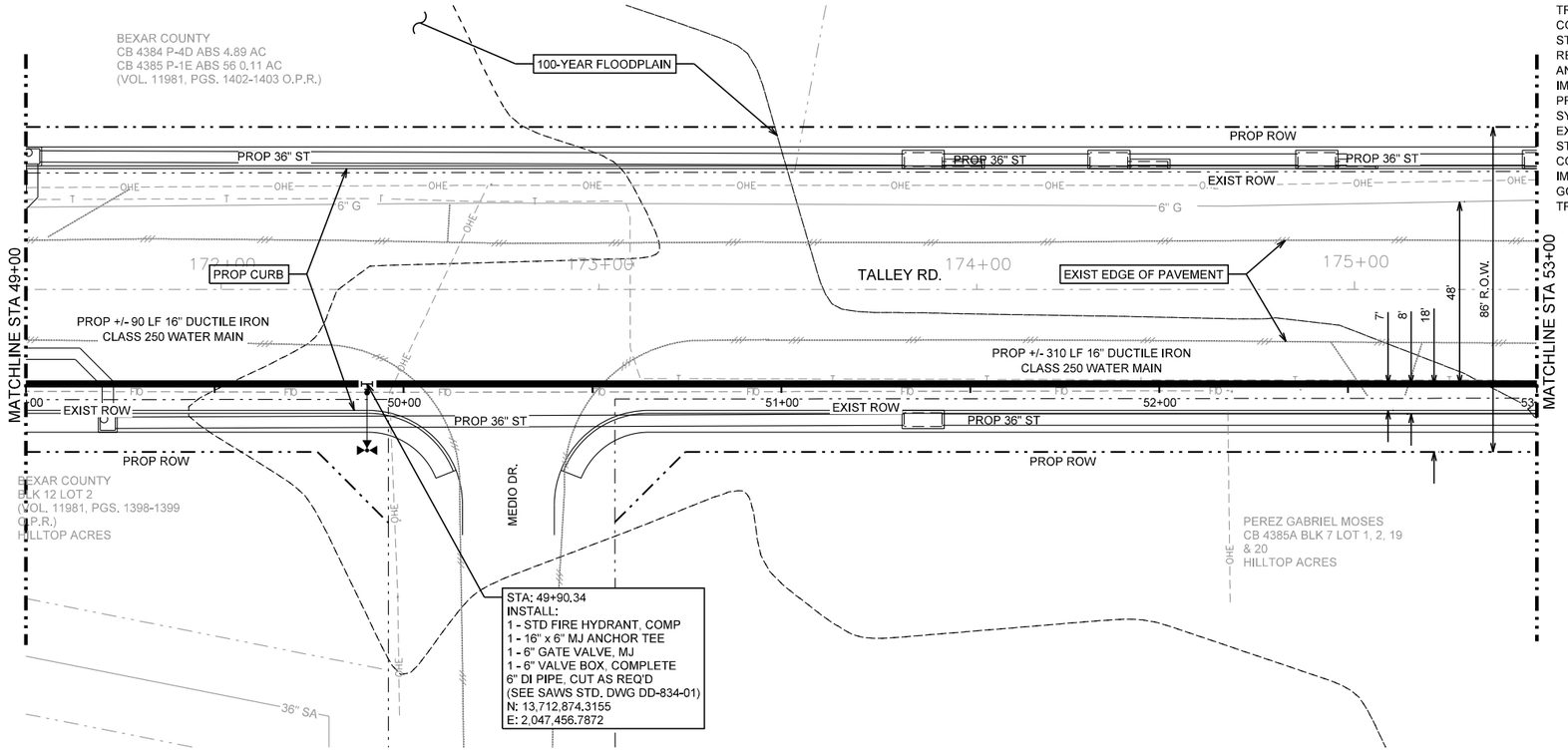

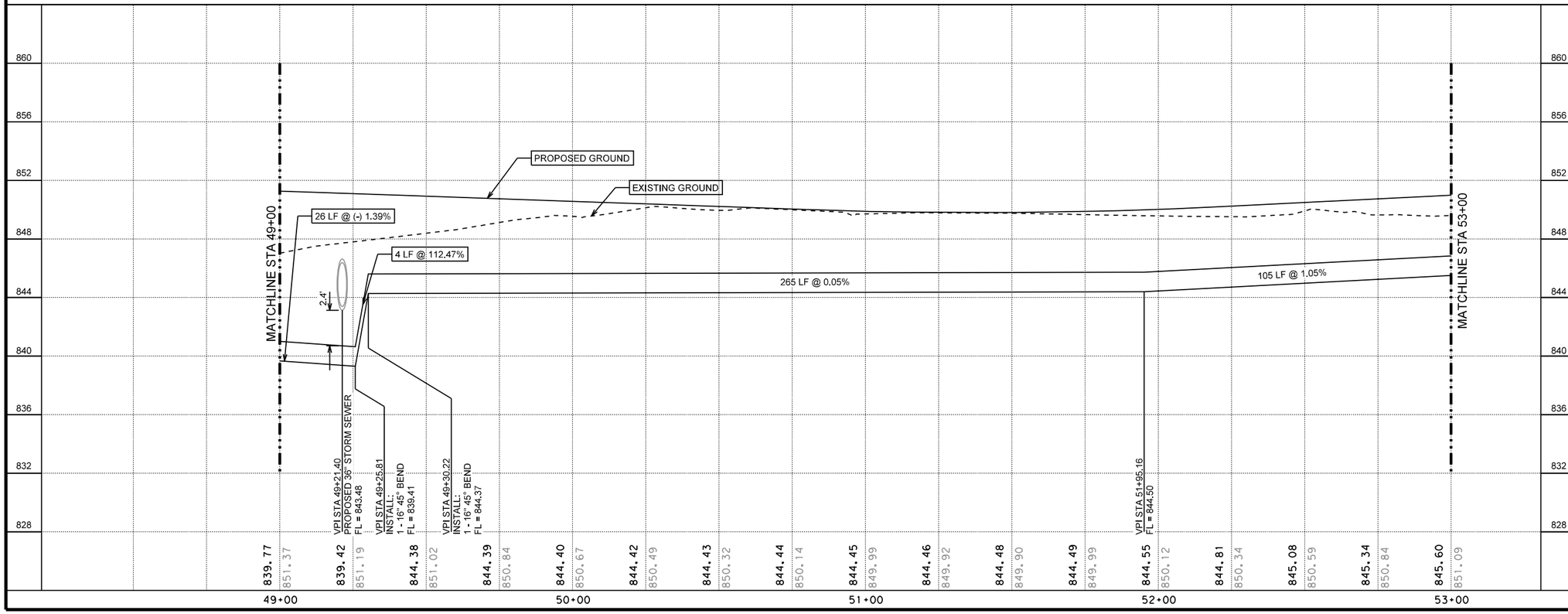

LEGEND

- PROP. WATER MAIN
- EXIST. WATER MAIN — 6"C.I.W.
- GAS MAIN — 2"G
- SANITARY SEWER — 8"SA
- STORM SEWER — 24"ST
- UTILITY POLE LINE
- ELECTRIC CABLE — E
- TELEPHONE CABLE — T
- DUAL BRANCH SERV.
- NEW UNMETERED SERVICE:
  - 3/4" SINGLE
  - 1" DUAL
- SERVICE RECONNECT:
  - 3/4"
  - 1" OR LARGER
- SERVICE RELAY:
  - 3/4"
  - 1" OR LARGER
- SERVICE RELOCATE:
  - 3/4"
  - 1" OR LARGER
- RELOCATE METER
- NEW SERVICE:
  - 3/4"
  - 1" OR LARGER

HORIZONTAL SCALE
0 20' 40'

VERTICAL SCALE
0 4' 8'

70% SUBMITTAL

THIS DOCUMENT IS RELEASED FOR THE PURPOSE OF INTERIM REVIEW UNDER THE AUTHORITY OF Michael Persyn, P.E. 96583 2/17/2017

THIS DOCUMENT IS NOT INTENDED FOR BIDDING, PERMITTING AND/OR CONSTRUCTION PURPOSES

70% SUBMITTAL

No.	Revision	Drawn	Approved	Date

REVISIONS

TALLEY ROAD WATER PLANS

WATERLINE A - PLAN AND PROFILE STA 49+00 TO STA 53+00

DEVELOPER:

CONT. | BUDGET PROJ.

SUBMITTED

APPROVED

MAP No. | SHEET

SECT. No. | 17

DR. | CK. | JOB No. 16-5020 | OF 31

TRENCH EXCAVATION SAFETY PROTECTION
CONTRACTOR AND/OR CONTRACTOR'S INDEPENDENTLY RETAINED EMPLOYEE OR STRUCTURAL DESIGN/GEOTECHNICAL/SAFETY/EQUIPMENT CONSULTANT, IF ANY SHALL REVIEW THESE PLANS AND AVAILABLE GEOTECHNICAL INFORMATION AND THE ANTICIPATED INSTALLATION SITE(S) WITHIN THE PROJECT WORK AREA IN ORDER TO IMPLEMENT CONTRACTOR'S TRENCH EXCAVATION SAFETY PROTECTION SYSTEM, PROGRAMS AND/OR PROCEDURES, THE CONTRACTOR'S IMPLEMENTATION OF THE SYSTEMS, PROGRAMS AND/OR PROCEDURES SHALL PROVIDE FOR ADEQUATE TRENCH EXCAVATION SAFETY PROTECTION THAT COMPLIES WITH AS A MINIMUM, OSHA STANDARDS FOR TRENCH EXCAVATIONS. SPECIFICALLY, CONTRACTOR AND/OR CONTRACTOR'S INDEPENDENTLY RETAINED EMPLOYEE OF SAFETY CONSULTANT SHALL IMPLEMENT A TRENCH SAFETY PROGRAM IN ACCORDANCE WITH OSHA STANDARDS GOVERNING THE PRESENCE AND ACTIVITIES OF INDIVIDUALS WORKING IN AND AROUND TRENCH EXCAVATION.

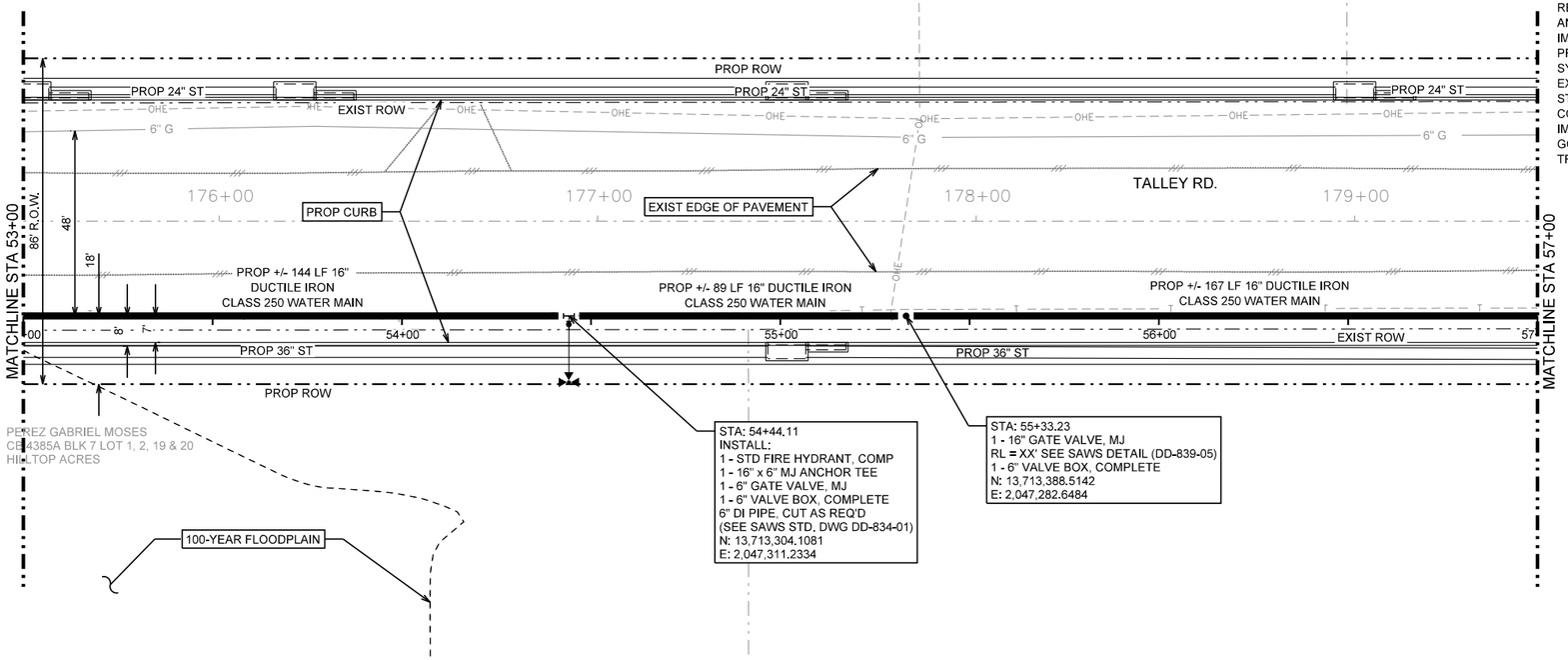

LEGEND

- PROP. WATER MAIN
- EXIST. WATER MAIN — 6"C.I.W.M.
- GAS MAIN — 2"G
- SANITARY SEWER — 8"SA
- STORM SEWER — 24"ST
- UTILITY POLE LINE
- ELECTRIC CABLE — E
- TELEPHONE CABLE — T
- DUAL BRANCH SERV.
- NEW UNMETERED SERVICE:
  - 3/4" SINGLE
  - 1" DUAL
- SERVICE RECONNECT:
  - 3/4"
  - 1" OR LARGER
- SERVICE RELAY:
  - 3/4"
  - 1" OR LARGER
- SERVICE RELOCATE:
  - 3/4"
  - 1" OR LARGER
- RELOCATE METER
- NEW SERVICE:
  - 3/4"
  - 1" OR LARGER

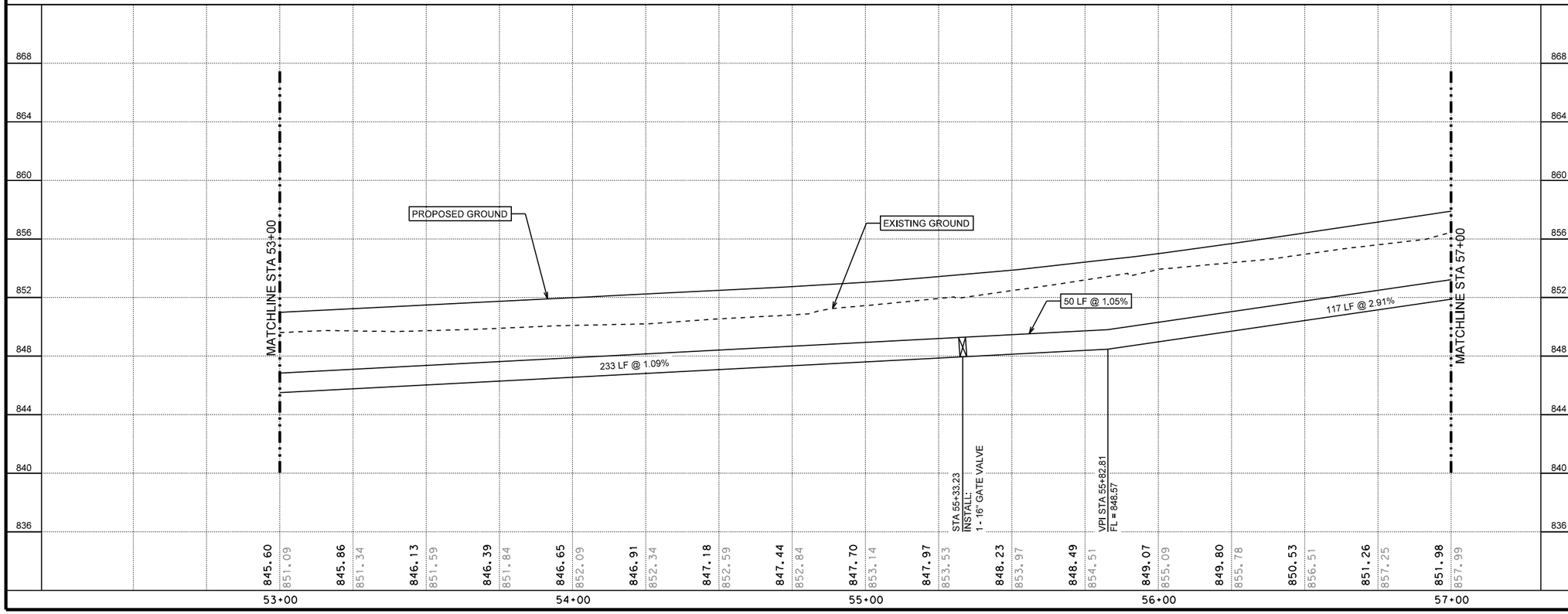

HORIZONTAL SCALE
0 20' 40'
VERTICAL SCALE
0 4' 8'

70% SUBMITTAL

THIS DOCUMENT IS RELEASED FOR THE PURPOSE OF INTERIM REVIEW UNDER THE AUTHORITY OF Michael Persyn, P.E. 96583 2/17/2017

THIS DOCUMENT IS NOT INTENDED FOR BIDDING, PERMITTING AND/OR CONSTRUCTION PURPOSES

70% SUBMITTAL

No.	Revision	Drawn	Approved	Date

REVISIONS

TALLEY ROAD WATER PLANS

WATERLINE A - PLAN AND PROFILE STA 53+00 TO STA 57+00

DEVELOPER:

CONT. | BUDGET PROJ.

SUBMITTED

APPROVED

MAP No.

SECT. No.

DR. | CK. | JOB No. 16-5020

SHEET 18 OF 31

TRENCH EXCAVATION SAFETY PROTECTION
CONTRACTOR AND/OR CONTRACTOR'S INDEPENDENTLY RETAINED EMPLOYEE OR STRUCTURAL DESIGN/GEOTECHNICAL/SAFETY/EQUIPMENT CONSULTANT, IF ANY SHALL REVIEW THESE PLANS AND AVAILABLE GEOTECHNICAL INFORMATION AND THE ANTICIPATED INSTALLATION SITE(S) WITHIN THE PROJECT WORK AREA IN ORDER TO IMPLEMENT CONTRACTOR'S TRENCH EXCAVATION SAFETY PROTECTION SYSTEM, PROGRAMS AND/OR PROCEDURES, THE CONTRACTOR'S IMPLEMENTATION OF THE SYSTEMS, PROGRAMS AND/OR PROCEDURES SHALL PROVIDE FOR ADEQUATE TRENCH EXCAVATION SAFETY PROTECTION THAT COMPLIES WITH AS A MINIMUM, OSHA STANDARDS FOR TRENCH EXCAVATIONS. SPECIFICALLY, CONTRACTOR AND/OR CONTRACTOR'S INDEPENDENTLY RETAINED EMPLOYEE OF SAFETY CONSULTANT SHALL IMPLEMENT A TRENCH SAFETY PROGRAM IN ACCORDANCE WITH OSHA STANDARDS GOVERNING THE PRESENCE AND ACTIVITIES OF INDIVIDUALS WORKING IN AND AROUND TRENCH EXCAVATION.

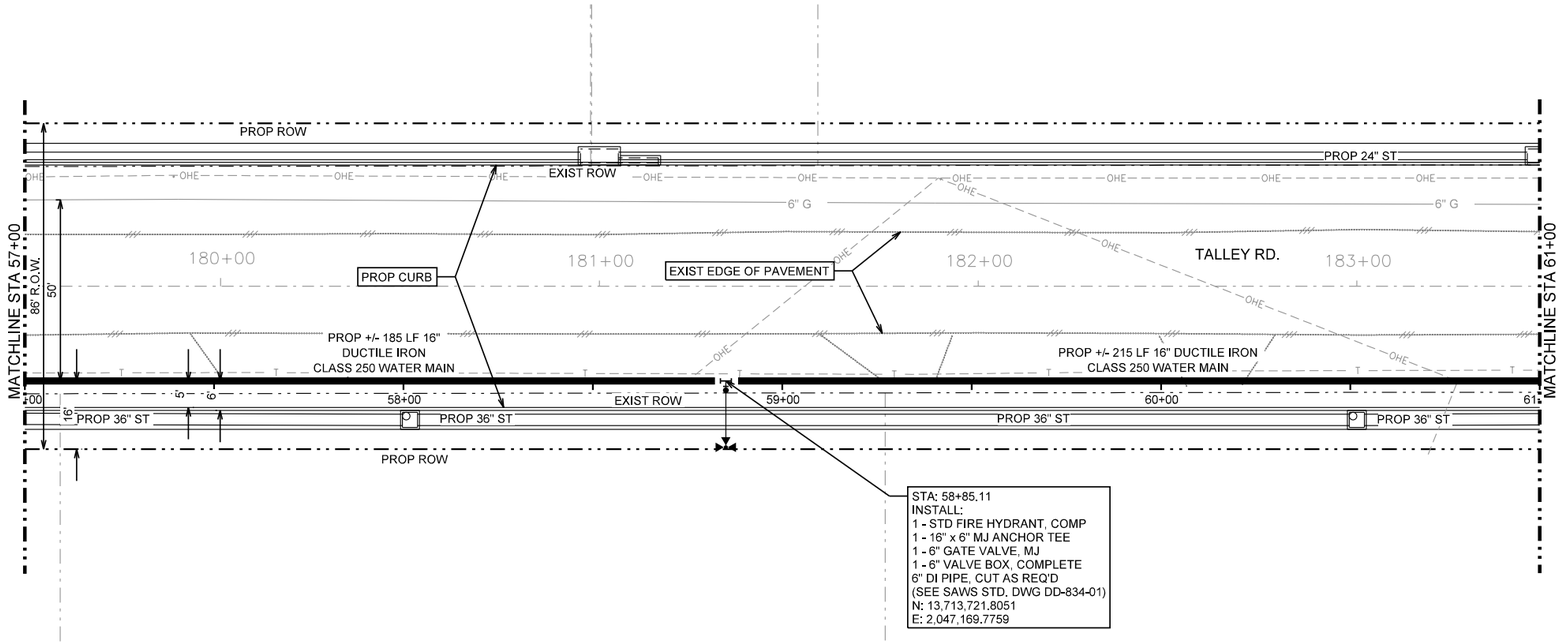

LEGEND

- PROP. WATER MAIN
- EXIST. WATER MAIN — 6"C.I.W.
- GAS MAIN — 2"G
- SANITARY SEWER — 8"SA
- STORM SEWER — 24"ST
- UTILITY POLE LINE
- ELECTRIC CABLE — E
- TELEPHONE CABLE — T
- DUAL BRANCH SERV.
- NEW UNMETERED SERVICE:
  - 3/4" SINGLE
  - 1" DUAL
- SERVICE RECONNECT:
  - 3/4"
  - 1" OR LARGER
- SERVICE RELAY:
  - 3/4"
  - 1" OR LARGER
- SERVICE RELOCATE:
  - 3/4"
  - 1" OR LARGER
- RELOCATE METER
- NEW SERVICE:
  - 3/4"
  - 1" OR LARGER

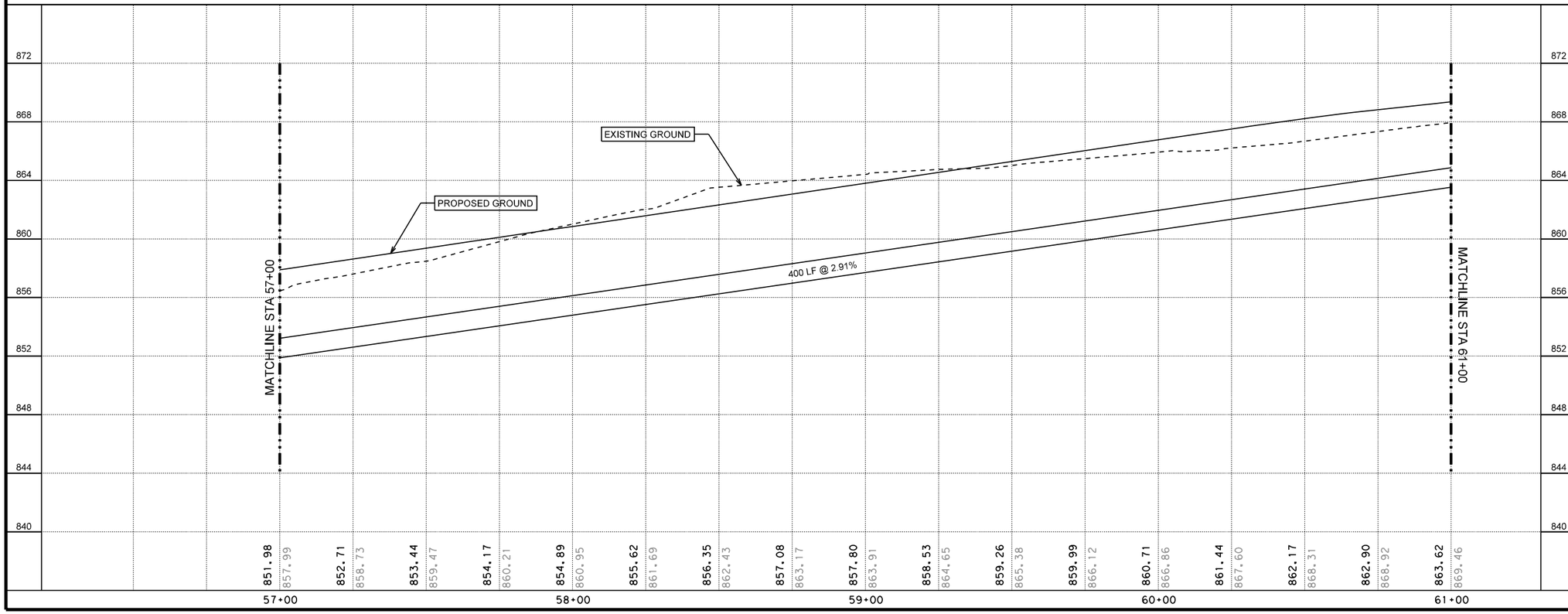

HORIZONTAL SCALE
0 20' 40'
VERTICAL SCALE
0 4' 8'

70% SUBMITTAL

THIS DOCUMENT IS RELEASED FOR THE PURPOSE OF INTERIM REVIEW UNDER THE AUTHORITY OF Michael Persyn, P.E. 96583 2/17/2017
THIS DOCUMENT IS NOT INTENDED FOR BIDDING, PERMITTING AND/OR CONSTRUCTION PURPOSES

70% SUBMITTAL

No.	Revision	Drawn	Approved	Date

REVISIONS

TALLEY ROAD WATER PLANS

WATERLINE A - PLAN AND PROFILE STA 57+00 TO STA 61+00

DEVELOPER:
CONT. | BUDGET PROJ.
SUBMITTED
APPROVED
MAP No.
SECT. No.
DR. | CK. | JOB No. 16-5020
SHEET 19 OF 31

TRENCH EXCAVATION SAFETY PROTECTION
CONTRACTOR AND/OR CONTRACTOR'S INDEPENDENTLY RETAINED EMPLOYEE OR STRUCTURAL DESIGN/GEOTECHNICAL/SAFETY/EQUIPMENT CONSULTANT, IF ANY SHALL REVIEW THESE PLANS AND AVAILABLE GEOTECHNICAL INFORMATION AND THE ANTICIPATED INSTALLATION SITE(S) WITHIN THE PROJECT WORK AREA IN ORDER TO IMPLEMENT CONTRACTOR'S TRENCH EXCAVATION SAFETY PROTECTION SYSTEM, PROGRAMS AND/OR PROCEDURES, THE CONTRACTOR'S IMPLEMENTATION OF THE SYSTEMS, PROGRAMS AND/OR PROCEDURES SHALL PROVIDE FOR ADEQUATE TRENCH EXCAVATION SAFETY PROTECTION THAT COMPLIES WITH AS A MINIMUM, OSHA STANDARDS FOR TRENCH EXCAVATIONS. SPECIFICALLY, CONTRACTOR AND/OR CONTRACTOR'S INDEPENDENTLY RETAINED EMPLOYEE OF SAFETY CONSULTANT SHALL IMPLEMENT A TRENCH SAFETY PROGRAM IN ACCORDANCE WITH OSHA STANDARDS GOVERNING THE PRESENCE AND ACTIVITIES OF INDIVIDUALS WORKING IN AND AROUND TRENCH EXCAVATION.

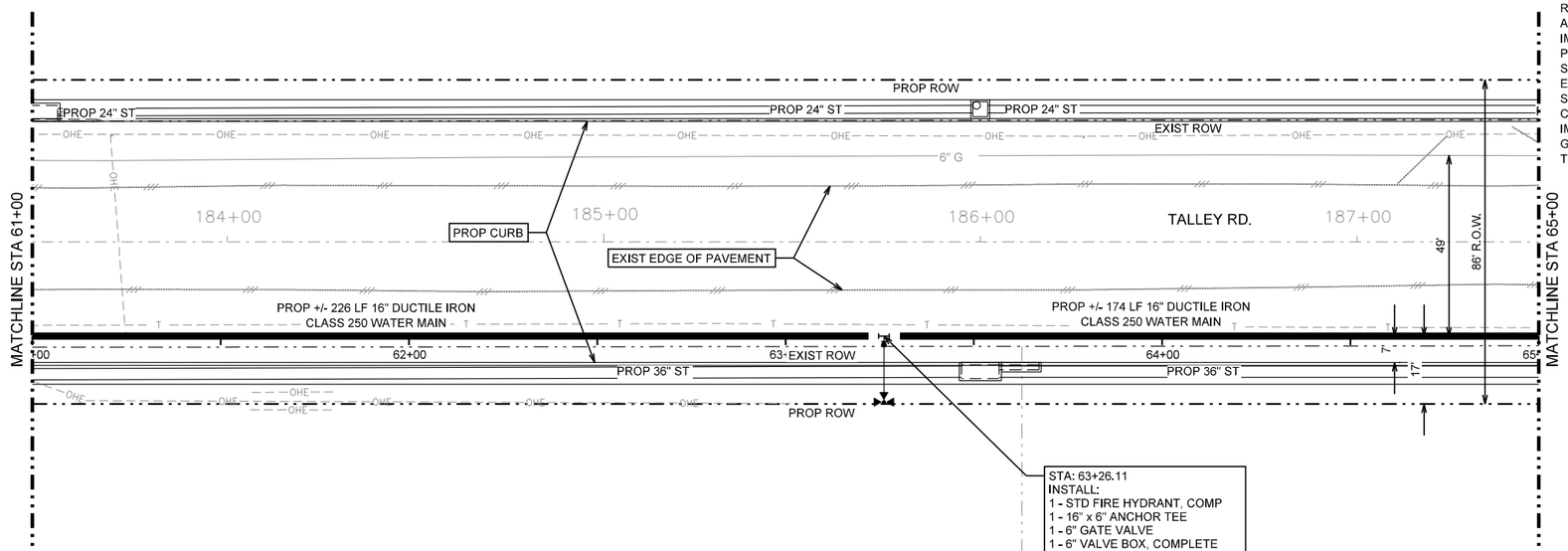

LEGEND

- PROP. WATER MAIN
- EXIST. WATER MAIN — 6"C.I.W.M.
- GAS MAIN — 2"G
- SANITARY SEWER — 8"SA
- STORM SEWER — 24"ST
- UTILITY POLE LINE
- ELECTRIC CABLE — E
- TELEPHONE CABLE — T
- DUAL BRANCH SERV.
- NEW UNMETERED SERVICE:
  - 3/4" SINGLE
  - 1" DUAL
- SERVICE RECONNECT:
  - 3/4"
  - 1" OR LARGER
- SERVICE RELAY:
  - 3/4"
  - 1" OR LARGER
- SERVICE RELOCATE:
  - 3/4"
  - 1" OR LARGER
- RELOCATE METER
- NEW SERVICE:
  - 3/4"
  - 1" OR LARGER

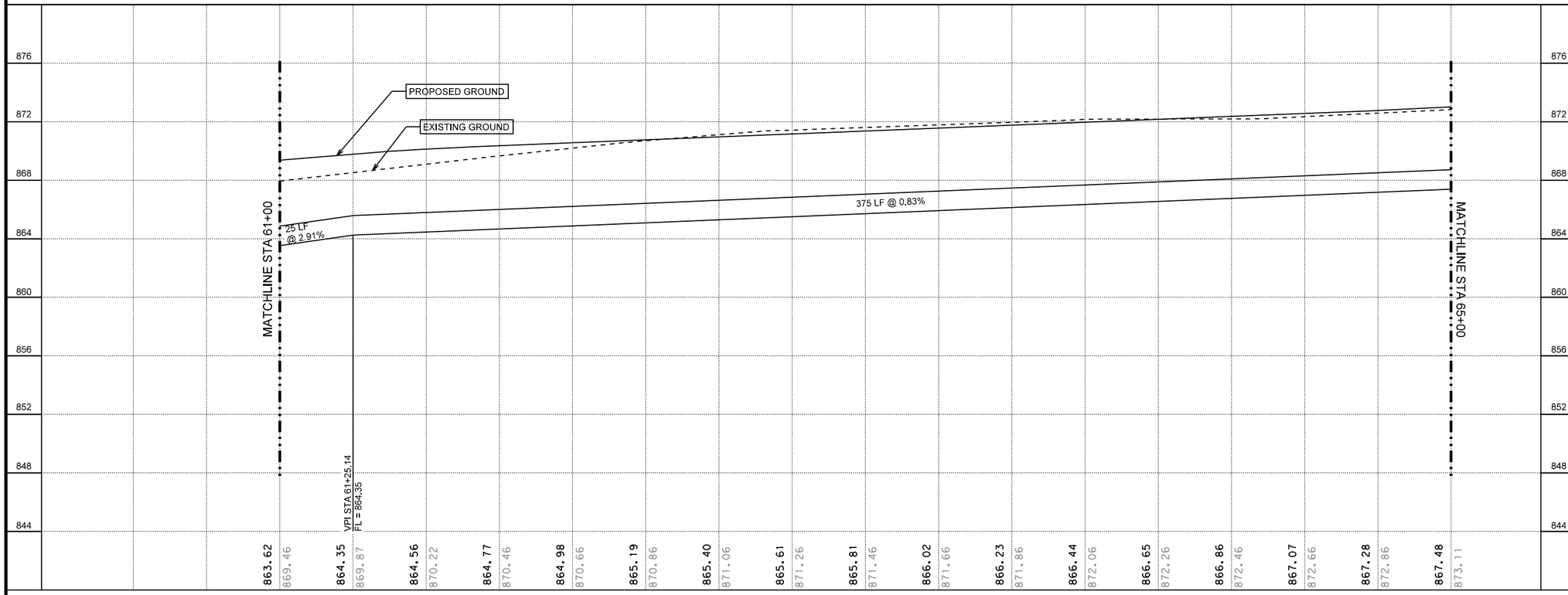

HORIZONTAL SCALE
0 20' 40'
0 4' 8'
VERTICAL SCALE

70% SUBMITTAL

THIS DOCUMENT IS RELEASED FOR THE PURPOSE OF INTERIM REVIEW UNDER THE AUTHORITY OF Michael Persyn, P.E. 96583 2/17/2017

THIS DOCUMENT IS NOT INTENDED FOR BIDDING, PERMITTING AND/OR CONSTRUCTION PURPOSES

70% SUBMITTAL

No.	Revision	Drawn	Approved	Date

REVISIONS

TALLEY ROAD WATER PLANS

WATERLINE A - PLAN AND PROFILE STA 61+00 TO STA 65+00

DEVELOPER:

CONT. | BUDGET PROJ.

SUBMITTED

APPROVED

MAP No. | SHEET

SECT. No. | 20

DR. | CK. | JOB No. 16-5020 | OF 31

TRENCH EXCAVATION SAFETY PROTECTION
CONTRACTOR AND/OR CONTRACTOR'S INDEPENDENTLY RETAINED EMPLOYEE OR STRUCTURAL DESIGN/GEOTECHNICAL/SAFETY/EQUIPMENT CONSULTANT, IF ANY SHALL REVIEW THESE PLANS AND AVAILABLE GEOTECHNICAL INFORMATION AND THE ANTICIPATED INSTALLATION SITE(S) WITHIN THE PROJECT WORK AREA IN ORDER TO IMPLEMENT CONTRACTOR'S TRENCH EXCAVATION SAFETY PROTECTION SYSTEM, PROGRAMS AND/OR PROCEDURES. THE CONTRACTOR'S IMPLEMENTATION OF THE SYSTEMS, PROGRAMS AND/OR PROCEDURES SHALL PROVIDE FOR ADEQUATE TRENCH EXCAVATION SAFETY PROTECTION THAT COMPLIES WITH AS A MINIMUM, OSHA STANDARDS FOR TRENCH EXCAVATIONS. SPECIFICALLY, CONTRACTOR AND/OR CONTRACTOR'S INDEPENDENTLY RETAINED EMPLOYEE OF SAFETY CONSULTANT SHALL IMPLEMENT A TRENCH SAFETY PROGRAM IN ACCORDANCE WITH OSHA STANDARDS GOVERNING THE PRESENCE AND ACTIVITIES OF INDIVIDUALS WORKING IN AND AROUND TRENCH EXCAVATION.

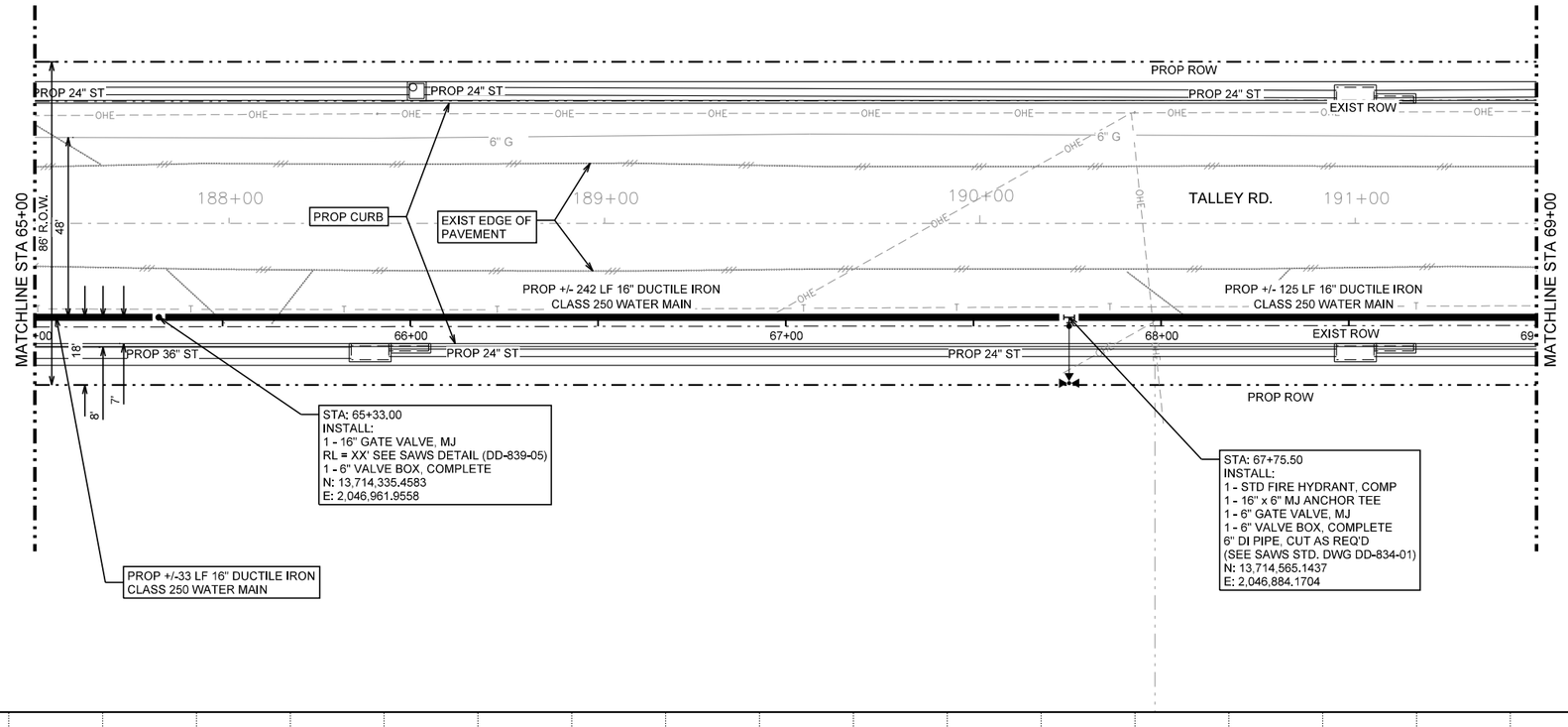

LEGEND

- PROP. WATER MAIN
- EXIST. WATER MAIN — 6"C.I.W.
- GAS MAIN — 2"G
- SANITARY SEWER — 8"SA
- STORM SEWER — 24"ST
- UTILITY POLE LINE
- ELECTRIC CABLE — E
- TELEPHONE CABLE — T
- DUAL BRANCH SERV.
- NEW UNMETERED SERVICE:
  - 3/4" SINGLE
  - 1" DUAL
- SERVICE RECONNECT:
  - 3/4"
  - 1" OR LARGER
- SERVICE RELAY:
  - 3/4"
  - 1" OR LARGER
- SERVICE RELOCATE:
  - 3/4"
  - 1" OR LARGER
- RELOCATE METER
- NEW SERVICE:
  - 3/4"
  - 1" OR LARGER

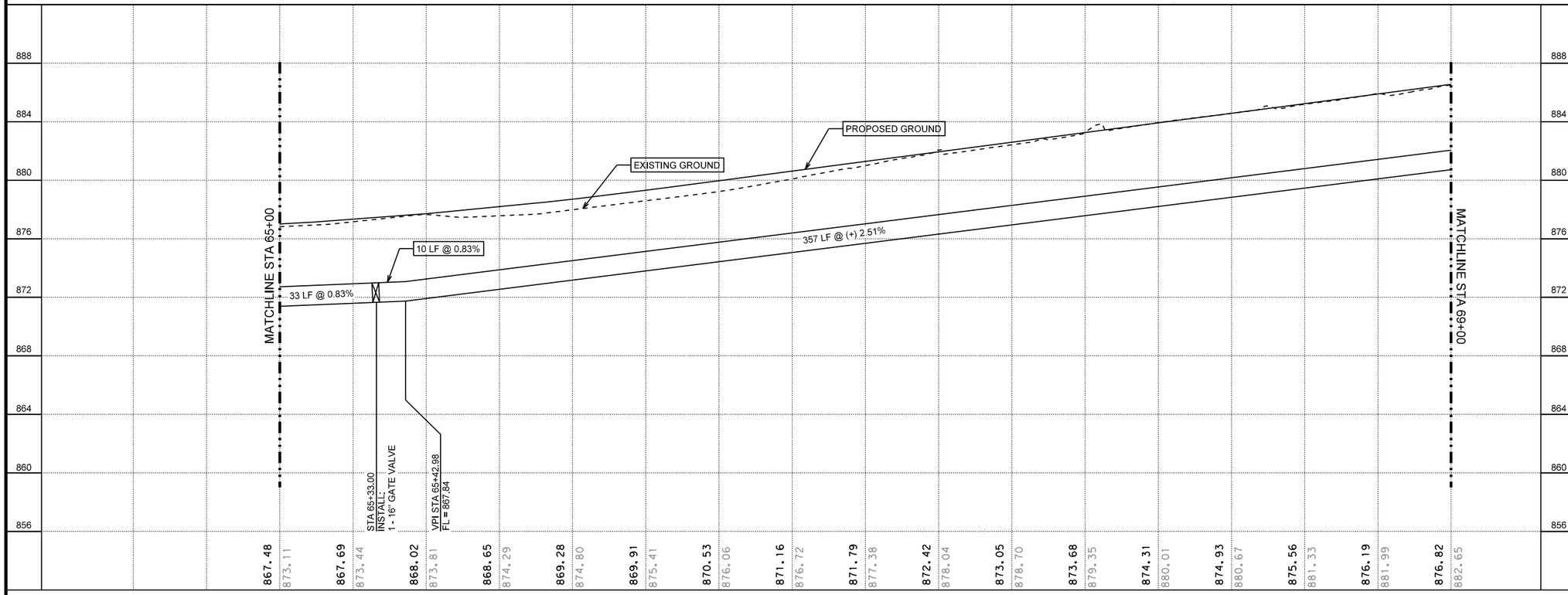

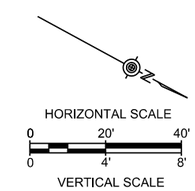

70% SUBMITTAL

THIS DOCUMENT IS RELEASED FOR THE PURPOSE OF INTERIM REVIEW UNDER THE AUTHORITY OF Michael Persyn, P.E. 96583 2/17/2017

THIS DOCUMENT IS NOT INTENDED FOR BIDDING, PERMITTING AND/OR CONSTRUCTION PURPOSES

70% SUBMITTAL

No.	Revision	Drawn	Approved	Date

REVISIONS

TALLEY ROAD WATER PLANS

WATERLINE A - PLAN AND PROFILE STA 65+00 TO STA 69+00

DEVELOPER:

CONT. | BUDGET PROJ.

SUBMITTED

APPROVED

MAP No. | SHEET

SECT. No. | 21

DR. | CK. | JOB No. 16-5020 | OF 31

TRENCH EXCAVATION SAFETY PROTECTION
CONTRACTOR AND/OR CONTRACTOR'S INDEPENDENTLY RETAINED EMPLOYEE OR STRUCTURAL DESIGN/GEOTECHNICAL/SAFETY/EQUIPMENT CONSULTANT, IF ANY SHALL REVIEW THESE PLANS AND AVAILABLE GEOTECHNICAL INFORMATION AND THE ANTICIPATED INSTALLATION SITE(S) WITHIN THE PROJECT WORK AREA IN ORDER TO IMPLEMENT CONTRACTOR'S TRENCH EXCAVATION SAFETY PROTECTION SYSTEM, PROGRAMS AND/OR PROCEDURES, THE CONTRACTOR'S IMPLEMENTATION OF THE SYSTEMS, PROGRAMS AND/OR PROCEDURES SHALL PROVIDE FOR ADEQUATE TRENCH EXCAVATION SAFETY PROTECTION THAT COMPLIES WITH AS A MINIMUM, OSHA STANDARDS FOR TRENCH EXCAVATIONS. SPECIFICALLY, CONTRACTOR AND/OR CONTRACTOR'S INDEPENDENTLY RETAINED EMPLOYEE OF SAFETY CONSULTANT SHALL IMPLEMENT A TRENCH SAFETY PROGRAM IN ACCORDANCE WITH OSHA STANDARDS GOVERNING THE PRESENCE AND ACTIVITIES OF INDIVIDUALS WORKING IN AND AROUND TRENCH EXCAVATION.

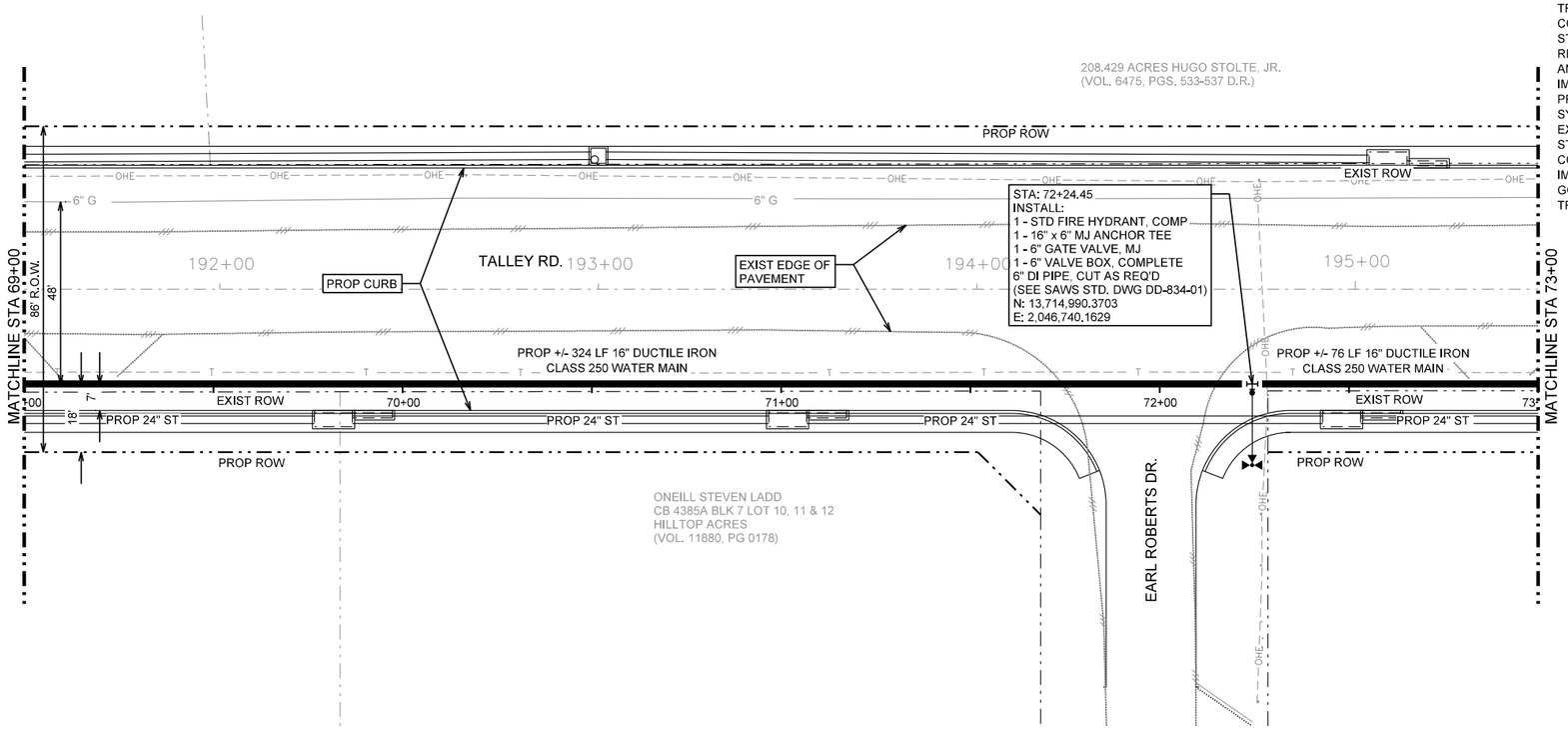

LEGEND

- PROP. WATER MAIN
- EXIST. WATER MAIN — 6"C.I.W.
- GAS MAIN — 2"G
- SANITARY SEWER — 8"SA
- STORM SEWER — 24"ST
- UTILITY POLE LINE
- ELECTRIC CABLE — E
- TELEPHONE CABLE — T
- DUAL BRANCH SERV.
- NEW UNMETERED SERVICE:
  - 3/4" SINGLE
  - 1" DUAL
- SERVICE RECONNECT:
  - 3/4"
  - 1" OR LARGER
- SERVICE RELAY:
  - 3/4"
  - 1" OR LARGER
- SERVICE RELOCATE:
  - 3/4"
  - 1" OR LARGER
- RELOCATE METER
- NEW SERVICE:
  - 3/4"
  - 1" OR LARGER

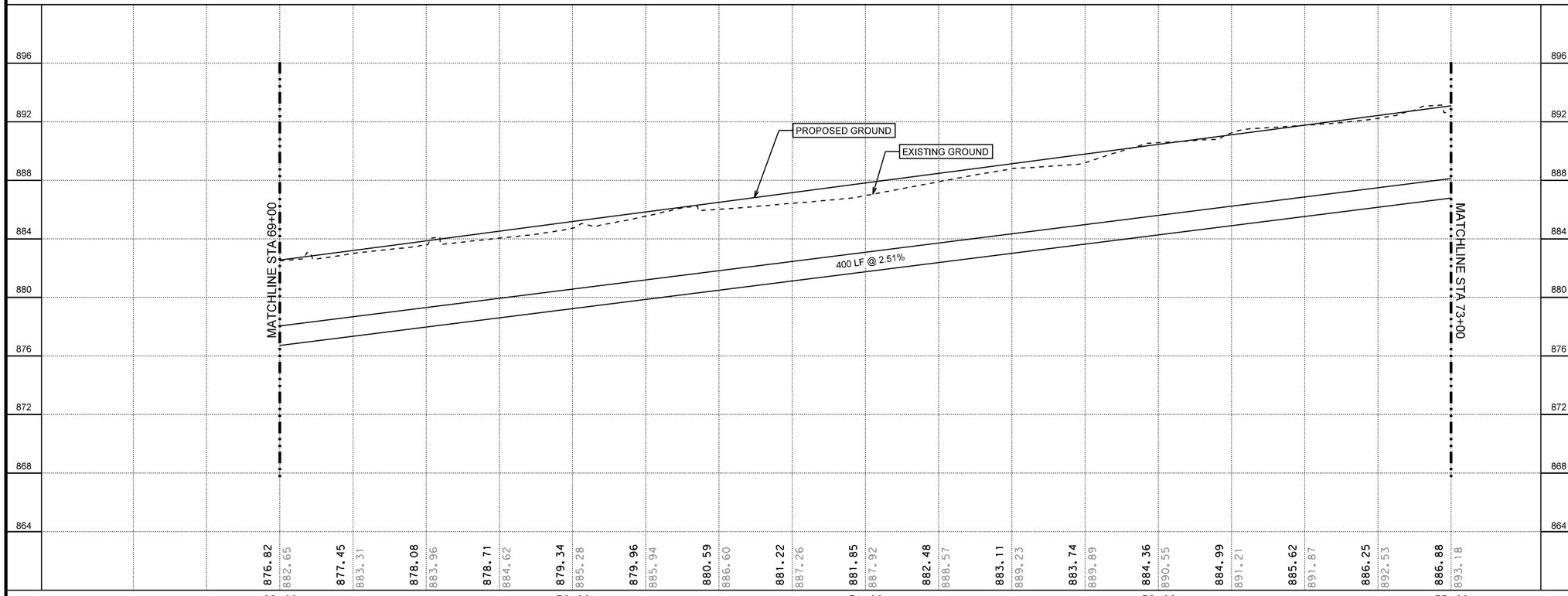

HORIZONTAL SCALE
0 20' 40'
VERTICAL SCALE
0 4' 8'

70% SUBMITTAL

THIS DOCUMENT IS RELEASED FOR THE PURPOSE OF INTERIM REVIEW UNDER THE AUTHORITY OF Michael Persyn, P.E. 96583 2/17/2017

THIS DOCUMENT IS NOT INTENDED FOR BIDDING, PERMITTING AND/OR CONSTRUCTION PURPOSES

70% SUBMITTAL

No.	Revision	Drawn	Approved	Date

REVISIONS

TALLEY ROAD WATER PLANS

WATERLINE A - PLAN AND PROFILE
STA 69+00 TO STA 73+00

DEVELOPER:
CONT. BUDGET PROJ.
SUBMITTED
APPROVED

MAP No. SHEET 22
SECT. No. OF 31
DR. CK. JOB No. 16-5020

TRENCH EXCAVATION SAFETY PROTECTION
CONTRACTOR AND/OR CONTRACTOR'S INDEPENDENTLY RETAINED EMPLOYEE OR STRUCTURAL DESIGN/GEOTECHNICAL/SAFETY/EQUIPMENT CONSULTANT, IF ANY SHALL REVIEW THESE PLANS AND AVAILABLE GEOTECHNICAL INFORMATION AND THE ANTICIPATED INSTALLATION SITE(S) WITHIN THE PROJECT WORK AREA IN ORDER TO IMPLEMENT CONTRACTOR'S TRENCH EXCAVATION SAFETY PROTECTION SYSTEM, PROGRAMS AND/OR PROCEDURES, THE CONTRACTOR'S IMPLEMENTATION OF THE SYSTEMS, PROGRAMS AND/OR PROCEDURES SHALL PROVIDE FOR ADEQUATE TRENCH EXCAVATION SAFETY PROTECTION THAT COMPLIES WITH AS A MINIMUM, OSHA STANDARDS FOR TRENCH EXCAVATIONS. SPECIFICALLY, CONTRACTOR AND/OR CONTRACTOR'S INDEPENDENTLY RETAINED EMPLOYEE OF SAFETY CONSULTANT SHALL IMPLEMENT A TRENCH SAFETY PROGRAM IN ACCORDANCE WITH OSHA STANDARDS GOVERNING THE PRESENCE AND ACTIVITIES OF INDIVIDUALS WORKING IN AND AROUND TRENCH EXCAVATION.

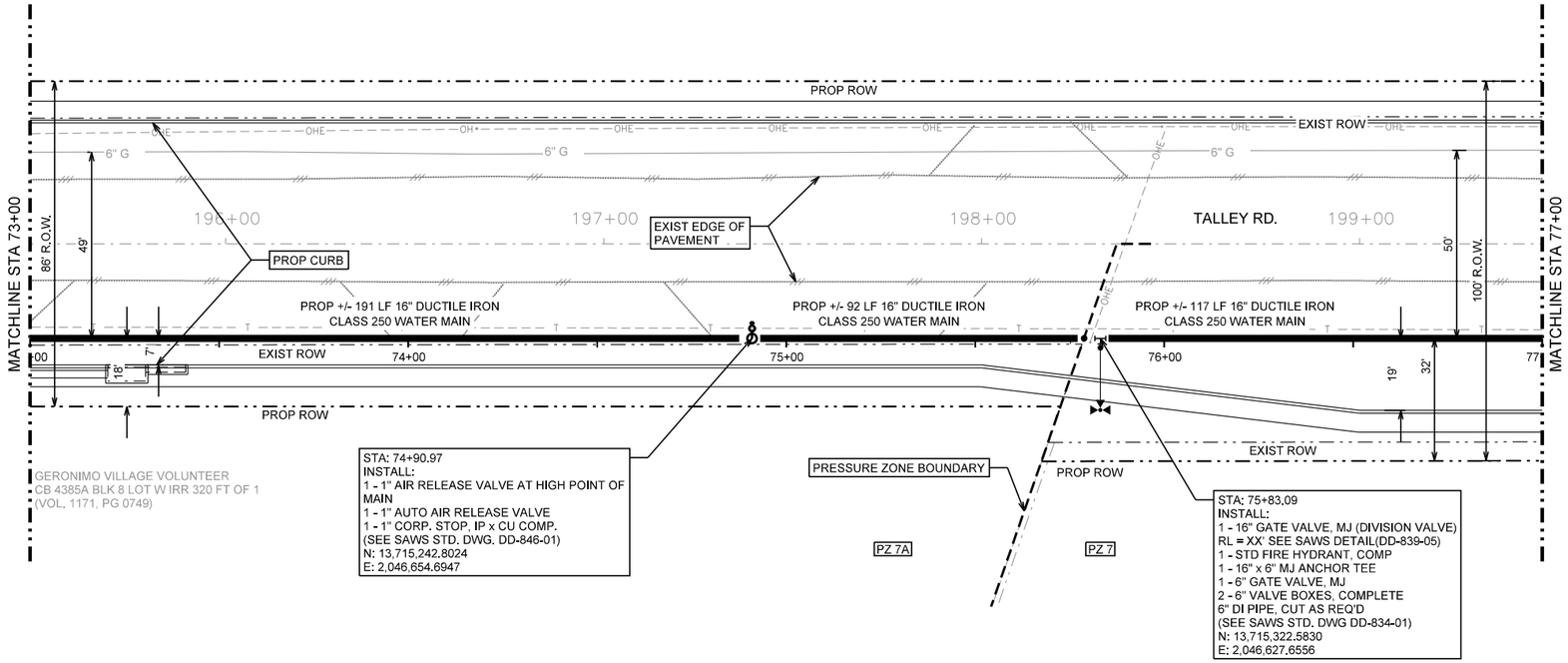

LEGEND

- PROP. WATER MAIN
- EXIST. WATER MAIN — 6"C.I.W.
- GAS MAIN — 2"G
- SANITARY SEWER — 8"SA
- STORM SEWER — 24"ST
- UTILITY POLE LINE
- ELECTRIC CABLE — E
- TELEPHONE CABLE — T
- DUAL BRANCH SERV.
- NEW UNMETERED SERVICE:
  - 3/4" SINGLE
  - 1" DUAL
- SERVICE RECONNECT:
  - 3/4"
  - 1" OR LARGER
- SERVICE RELAY:
  - 3/4"
  - 1" OR LARGER
- SERVICE RELOCATE:
  - 3/4"
  - 1" OR LARGER
- RELOCATE METER
- NEW SERVICE:
  - 3/4"
  - 1" OR LARGER

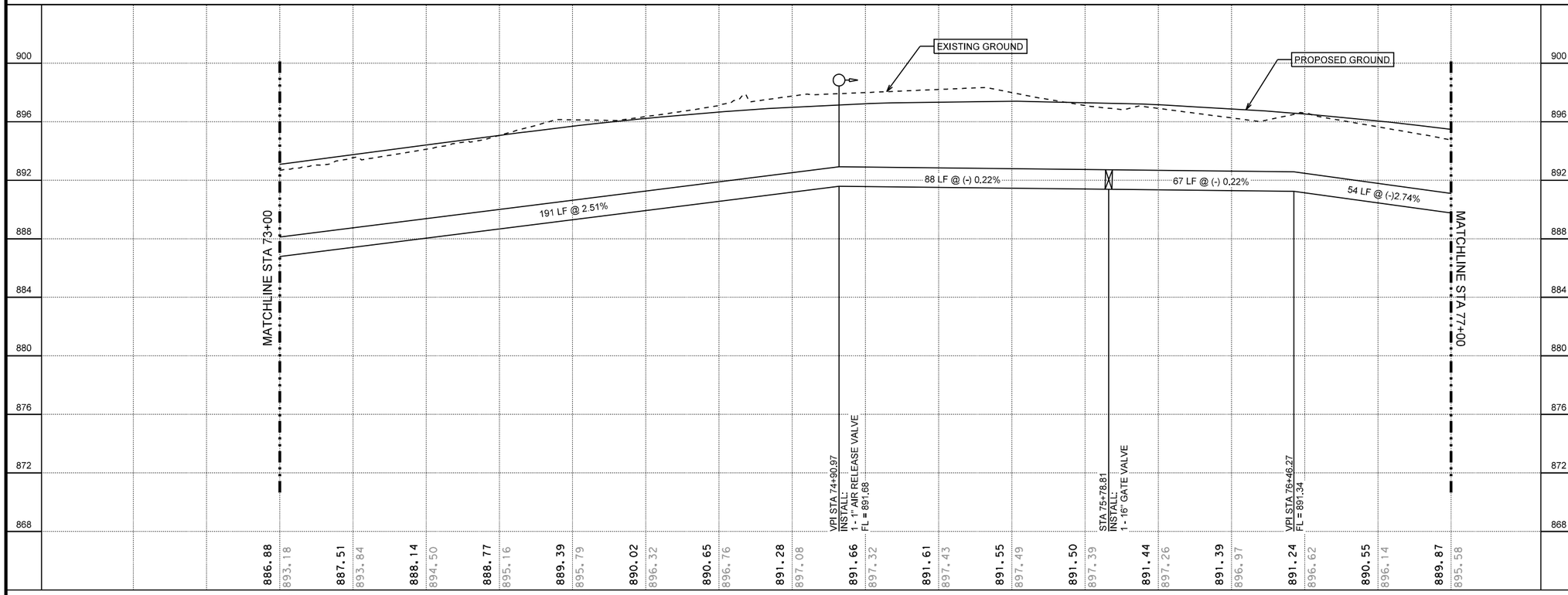

HORIZONTAL SCALE
0 20' 40'
0 4' 8'
VERTICAL SCALE

70% SUBMITTAL

THIS DOCUMENT IS RELEASED FOR THE PURPOSE OF INTERIM REVIEW UNDER THE AUTHORITY OF Michael Persyn, P.E. 96583 2/17/2017

THIS DOCUMENT IS NOT INTENDED FOR BIDDING, PERMITTING AND/OR CONSTRUCTION PURPOSES

70% SUBMITTAL

No.	Revision	Drawn	Approved	Date

REVISIONS

TALLEY ROAD WATER PLANS

WATERLINE A - PLAN AND PROFILE
STA 73+00 TO STA 77+00

DEVELOPER:
CONT. | BUDGET PROJ.
SUBMITTED
APPROVED
MAP No.
SECT. No.
DR. | CK. | JOB No. 16-5020
SHEET 23 OF 31

TRENCH EXCAVATION SAFETY PROTECTION
CONTRACTOR AND/OR CONTRACTOR'S INDEPENDENTLY RETAINED EMPLOYEE OR STRUCTURAL DESIGN/GEOTECHNICAL/SAFETY/EQUIPMENT CONSULTANT, IF ANY SHALL REVIEW THESE PLANS AND AVAILABLE GEOTECHNICAL INFORMATION AND THE ANTICIPATED INSTALLATION SITE(S) WITHIN THE PROJECT WORK AREA IN ORDER TO IMPLEMENT CONTRACTOR'S TRENCH EXCAVATION SAFETY PROTECTION SYSTEM, PROGRAMS AND/OR PROCEDURES. THE CONTRACTOR'S IMPLEMENTATION OF THE SYSTEMS, PROGRAMS AND/OR PROCEDURES SHALL PROVIDE FOR ADEQUATE TRENCH EXCAVATION SAFETY PROTECTION THAT COMPLIES WITH AS A MINIMUM, OSHA STANDARDS FOR TRENCH EXCAVATIONS. SPECIFICALLY, CONTRACTOR AND/OR CONTRACTOR'S INDEPENDENTLY RETAINED EMPLOYEE OF SAFETY CONSULTANT SHALL IMPLEMENT A TRENCH SAFETY PROGRAM IN ACCORDANCE WITH OSHA STANDARDS GOVERNING THE PRESENCE AND ACTIVITIES OF INDIVIDUALS WORKING IN AND AROUND TRENCH EXCAVATION.

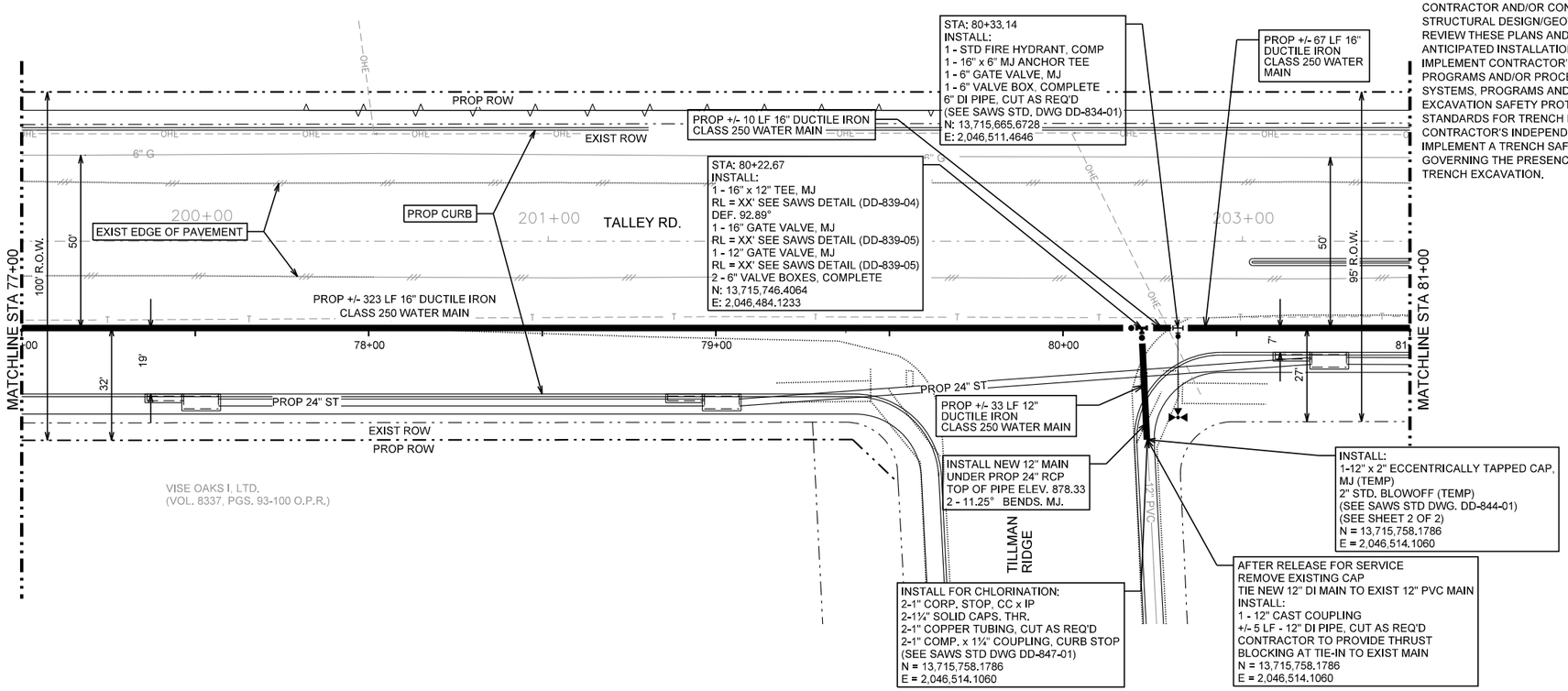

LEGEND

- PROP. WATER MAIN
- EXIST. WATER MAIN — 6"C.I.W.
- GAS MAIN — 2"G
- SANITARY SEWER — 8"SA
- STORM SEWER — 24"ST
- UTILITY POLE LINE
- ELECTRIC CABLE — E
- TELEPHONE CABLE — T
- DUAL BRANCH SERV.
- NEW UNMETERED SERVICE:
  - 3/4" SINGLE
  - 1" DUAL
- SERVICE RECONNECT:
  - 3/4"
  - 1" OR LARGER
- SERVICE RELAY:
  - 3/4"
  - 1" OR LARGER
- SERVICE RELOCATE:
  - 3/4"
  - 1" OR LARGER
- RELOCATE METER
- NEW SERVICE:
  - 3/4"
  - 1" OR LARGER

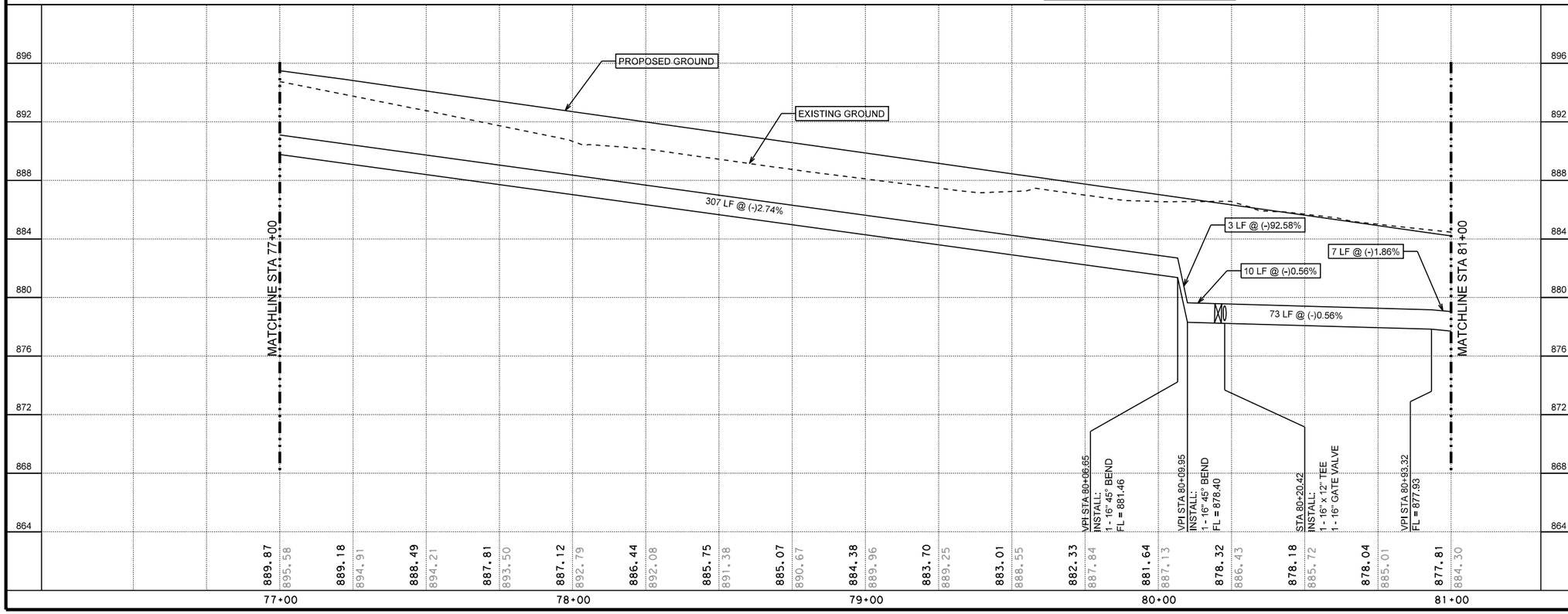

HORIZONTAL SCALE
0 20' 40'
VERTICAL SCALE
0 4' 8'

70% SUBMITTAL
THIS DOCUMENT IS RELEASED FOR THE PURPOSE OF INTERIM REVIEW UNDER THE AUTHORITY OF Michael Persyn, P.E. 96583 2/17/2017
THIS DOCUMENT IS NOT INTENDED FOR BIDDING, PERMITTING AND/OR CONSTRUCTION PURPOSES
70% SUBMITTAL

No.	Revision	Drawn	Approved	Date

REVISIONS

TALLEY ROAD WATER PLANS

WATERLINE A - PLAN AND PROFILE
STA 77+00 TO STA 81+00

DEVELOPER:
CONT. | BUDGET PROJ.
SUBMITTED
APPROVED
MAP No. | SHEET
SECT. No. | 24
DR. | CK. | JOB No. 16-5020 | OF 31

TRENCH EXCAVATION SAFETY PROTECTION
CONTRACTOR AND/OR CONTRACTOR'S INDEPENDENTLY RETAINED EMPLOYEE OR STRUCTURAL DESIGN/GEOTECHNICAL/SAFETY/EQUIPMENT CONSULTANT, IF ANY SHALL REVIEW THESE PLANS AND AVAILABLE GEOTECHNICAL INFORMATION AND THE ANTICIPATED INSTALLATION SITE(S) WITHIN THE PROJECT WORK AREA IN ORDER TO IMPLEMENT CONTRACTOR'S TRENCH EXCAVATION SAFETY PROTECTION SYSTEM, PROGRAMS AND/OR PROCEDURES, THE CONTRACTOR'S IMPLEMENTATION OF THE SYSTEMS, PROGRAMS AND/OR PROCEDURES SHALL PROVIDE FOR ADEQUATE TRENCH EXCAVATION SAFETY PROTECTION THAT COMPLIES WITH AS A MINIMUM, OSHA STANDARDS FOR TRENCH EXCAVATIONS. SPECIFICALLY, CONTRACTOR AND/OR CONTRACTOR'S INDEPENDENTLY RETAINED EMPLOYEE OF SAFETY CONSULTANT SHALL IMPLEMENT A TRENCH SAFETY PROGRAM IN ACCORDANCE WITH OSHA STANDARDS GOVERNING THE PRESENCE AND ACTIVITIES OF INDIVIDUALS WORKING IN AND AROUND TRENCH EXCAVATION.

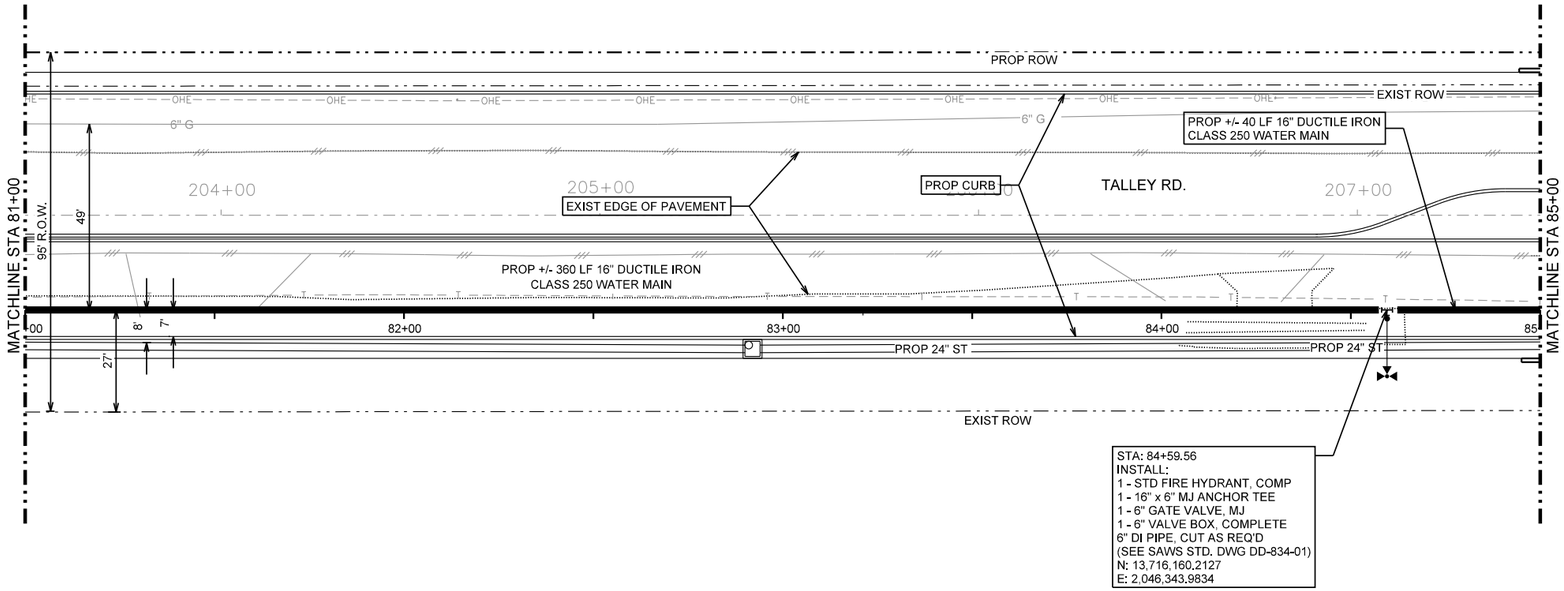

LEGEND

- PROP. WATER MAIN
- EXIST. WATER MAIN — 6"C.I.W.
- GAS MAIN — 2"G
- SANITARY SEWER — 8"SA
- STORM SEWER — 24"ST
- UTILITY POLE LINE
- ELECTRIC CABLE — E
- TELEPHONE CABLE — T
- DUAL BRANCH SERV.
- NEW UNMETERED SERVICE:
  - 3/4" SINGLE
  - 1" DUAL
- SERVICE RECONNECT:
  - 3/4"
  - 1" OR LARGER
- SERVICE RELAY:
  - 3/4"
  - 1" OR LARGER
- SERVICE RELOCATE:
  - 3/4"
  - 1" OR LARGER
- RELOCATE METER
- NEW SERVICE:
  - 3/4"
  - 1" OR LARGER

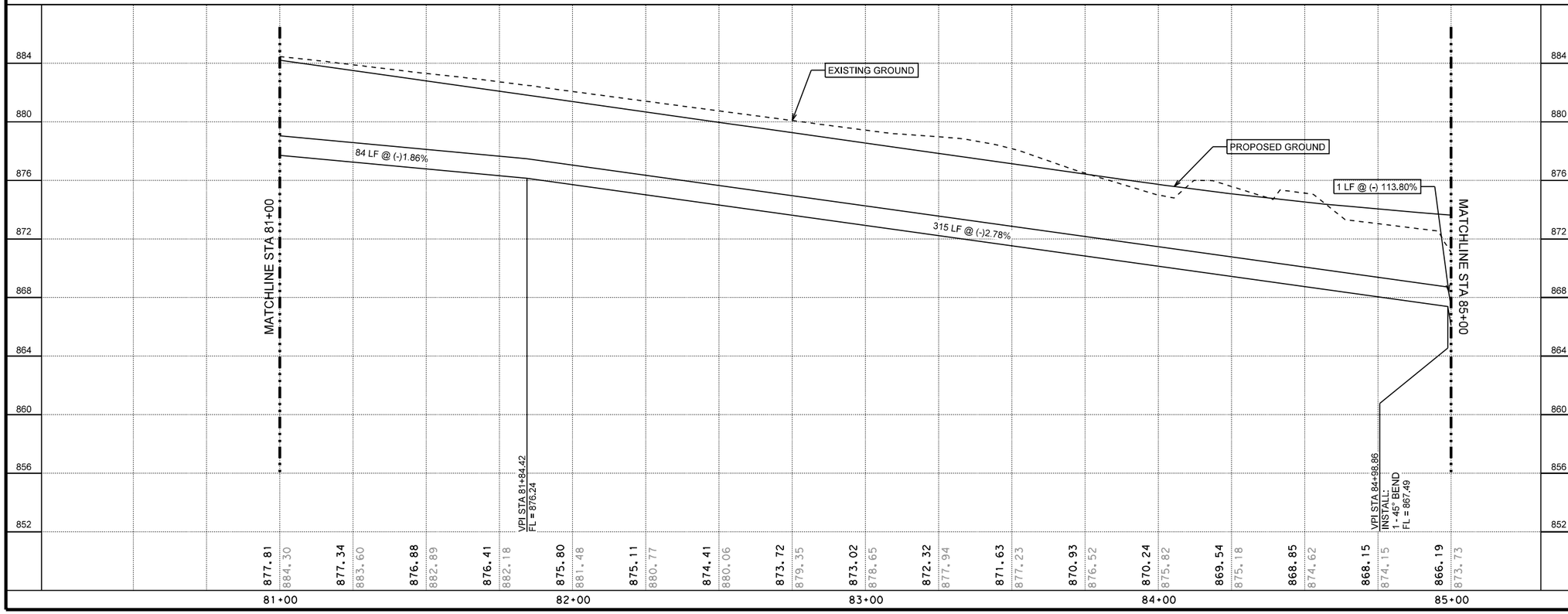

HORIZONTAL SCALE
0 20' 40'
0 4' 8'
VERTICAL SCALE

70% SUBMITTAL

THIS DOCUMENT IS RELEASED FOR THE PURPOSE OF INTERIM REVIEW UNDER THE AUTHORITY OF Michael Persyn, P.E. 96583 2/17/2017

THIS DOCUMENT IS NOT INTENDED FOR BIDDING, PERMITTING AND/OR CONSTRUCTION PURPOSES

70% SUBMITTAL

No.	Revision	Drawn	Approved	Date

REVISIONS

TALLEY ROAD WATER PLANS

WATERLINE A - PLAN AND PROFILE STA 81+00 TO STA 85+00

DEVELOPER:

CONT. | BUDGET PROJ.

SUBMITTED

APPROVED

MAP No. | SHEET

SECT. No. | 25

DR. | CK. | JOB No. 16-5020 | OF 31

TRENCH EXCAVATION SAFETY PROTECTION
CONTRACTOR AND/OR CONTRACTOR'S INDEPENDENTLY RETAINED EMPLOYEE OR STRUCTURAL DESIGN/GEOTECHNICAL/SAFETY/EQUIPMENT CONSULTANT, IF ANY SHALL REVIEW THESE PLANS AND AVAILABLE GEOTECHNICAL INFORMATION AND THE ANTICIPATED INSTALLATION SITE(S) WITHIN THE PROJECT WORK AREA IN ORDER TO IMPLEMENT CONTRACTOR'S TRENCH EXCAVATION SAFETY PROTECTION SYSTEM, PROGRAMS AND/OR PROCEDURES, THE CONTRACTOR'S IMPLEMENTATION OF THE SYSTEMS, PROGRAMS AND/OR PROCEDURES SHALL PROVIDE FOR ADEQUATE TRENCH EXCAVATION SAFETY PROTECTION THAT COMPLIES WITH AS A MINIMUM, OSHA STANDARDS FOR TRENCH EXCAVATIONS. SPECIFICALLY, CONTRACTOR AND/OR CONTRACTOR'S INDEPENDENTLY RETAINED EMPLOYEE OF SAFETY CONSULTANT SHALL IMPLEMENT A TRENCH SAFETY PROGRAM IN ACCORDANCE WITH OSHA STANDARDS GOVERNING THE PRESENCE AND ACTIVITIES OF INDIVIDUALS WORKING IN AND AROUND TRENCH EXCAVATION.

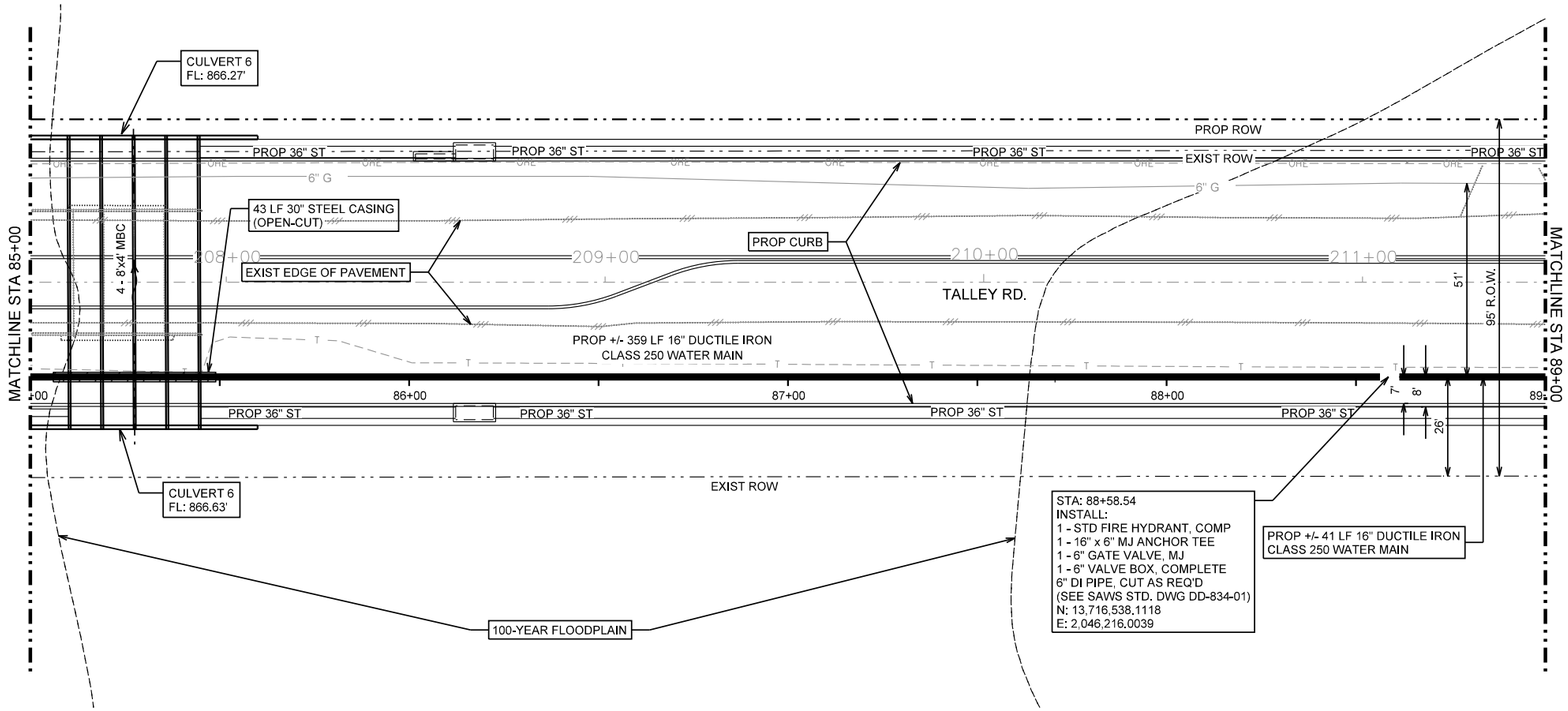

LEGEND

- PROP. WATER MAIN
- EXIST. WATER MAIN — 6"C.I.W.
- GAS MAIN — 2"G
- SANITARY SEWER — 8"SA
- STORM SEWER — 24"ST
- UTILITY POLE LINE
- ELECTRIC CABLE — E
- TELEPHONE CABLE — T
- DUAL BRANCH SERV.
- NEW UNMETERED SERVICE:
  - 3/4" SINGLE
  - 1" DUAL
- SERVICE RECONNECT:
  - 3/4"
  - 1" OR LARGER
- SERVICE RELAY:
  - 3/4"
  - 1" OR LARGER
- SERVICE RELOCATE:
  - 3/4"
  - 1" OR LARGER
- RELOCATE METER
- NEW SERVICE:
  - 3/4"
  - 1" OR LARGER

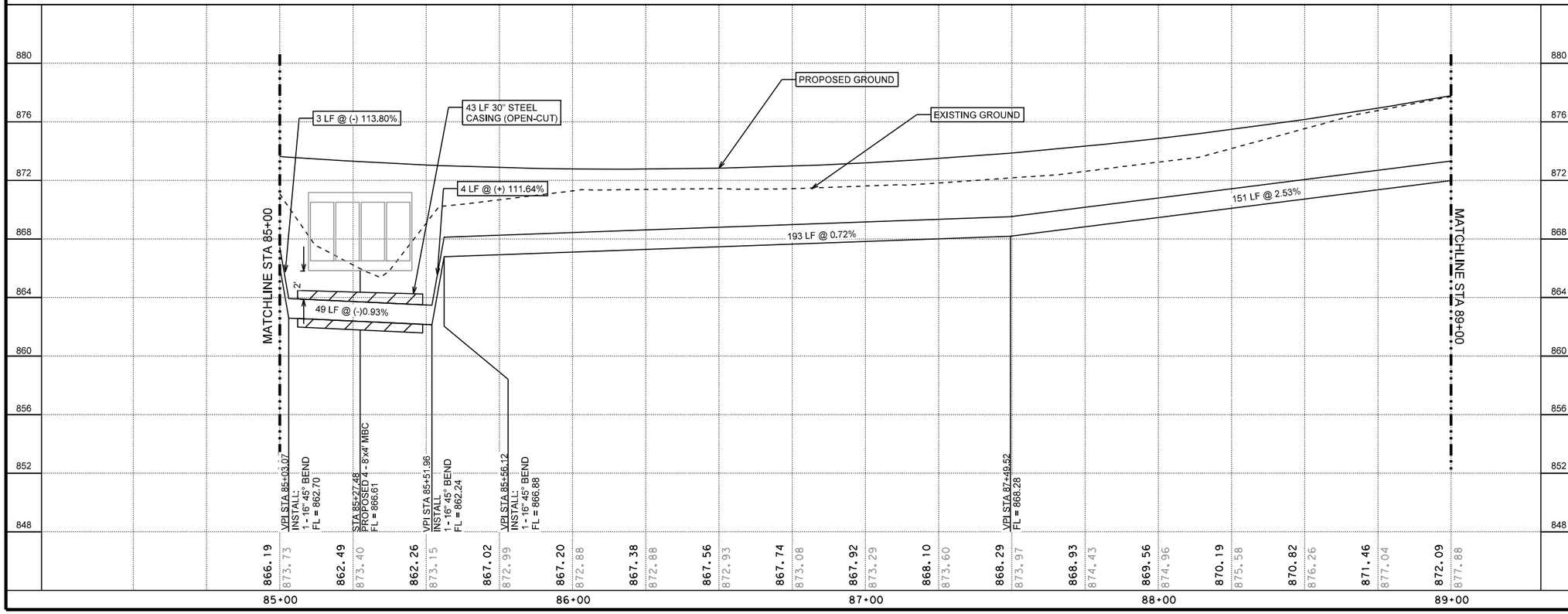

HORIZONTAL SCALE
0 20' 40'
VERTICAL SCALE
0 4' 8'

70% SUBMITTAL

THIS DOCUMENT IS RELEASED FOR THE PURPOSE OF INTERIM REVIEW UNDER THE AUTHORITY OF Michael Persyn, P.E. 96583 2/17/2017
THIS DOCUMENT IS NOT INTENDED FOR BIDDING, PERMITTING AND/OR CONSTRUCTION PURPOSES

70% SUBMITTAL

No.	Revision	Drawn	Approved	Date

REVISIONS

TALLEY ROAD WATER PLANS

WATERLINE A - PLAN AND PROFILE STA 85+00 TO STA 89+00

DEVELOPER:
CONT. | BUDGET PROJ.
SUBMITTED
APPROVED

MAP No.		SHEET
SECT. No.		26
DR. CK.	JOB No. 16-5020	OF 31

TRENCH EXCAVATION SAFETY PROTECTION
CONTRACTOR AND/OR CONTRACTOR'S INDEPENDENTLY RETAINED EMPLOYEE OR STRUCTURAL DESIGN/GEOTECHNICAL/SAFETY/EQUIPMENT CONSULTANT, IF ANY SHALL REVIEW THESE PLANS AND AVAILABLE GEOTECHNICAL INFORMATION AND THE ANTICIPATED INSTALLATION SITE(S) WITHIN THE PROJECT WORK AREA IN ORDER TO IMPLEMENT CONTRACTOR'S TRENCH EXCAVATION SAFETY PROTECTION SYSTEM, PROGRAMS AND/OR PROCEDURES, THE CONTRACTOR'S IMPLEMENTATION OF THE SYSTEMS, PROGRAMS AND/OR PROCEDURES SHALL PROVIDE FOR ADEQUATE TRENCH EXCAVATION SAFETY PROTECTION THAT COMPLIES WITH AS A MINIMUM, OSHA STANDARDS FOR TRENCH EXCAVATIONS. SPECIFICALLY, CONTRACTOR AND/OR CONTRACTOR'S INDEPENDENTLY RETAINED EMPLOYEE OF SAFETY CONSULTANT SHALL IMPLEMENT A TRENCH SAFETY PROGRAM IN ACCORDANCE WITH OSHA STANDARDS GOVERNING THE PRESENCE AND ACTIVITIES OF INDIVIDUALS WORKING IN AND AROUND TRENCH EXCAVATION.

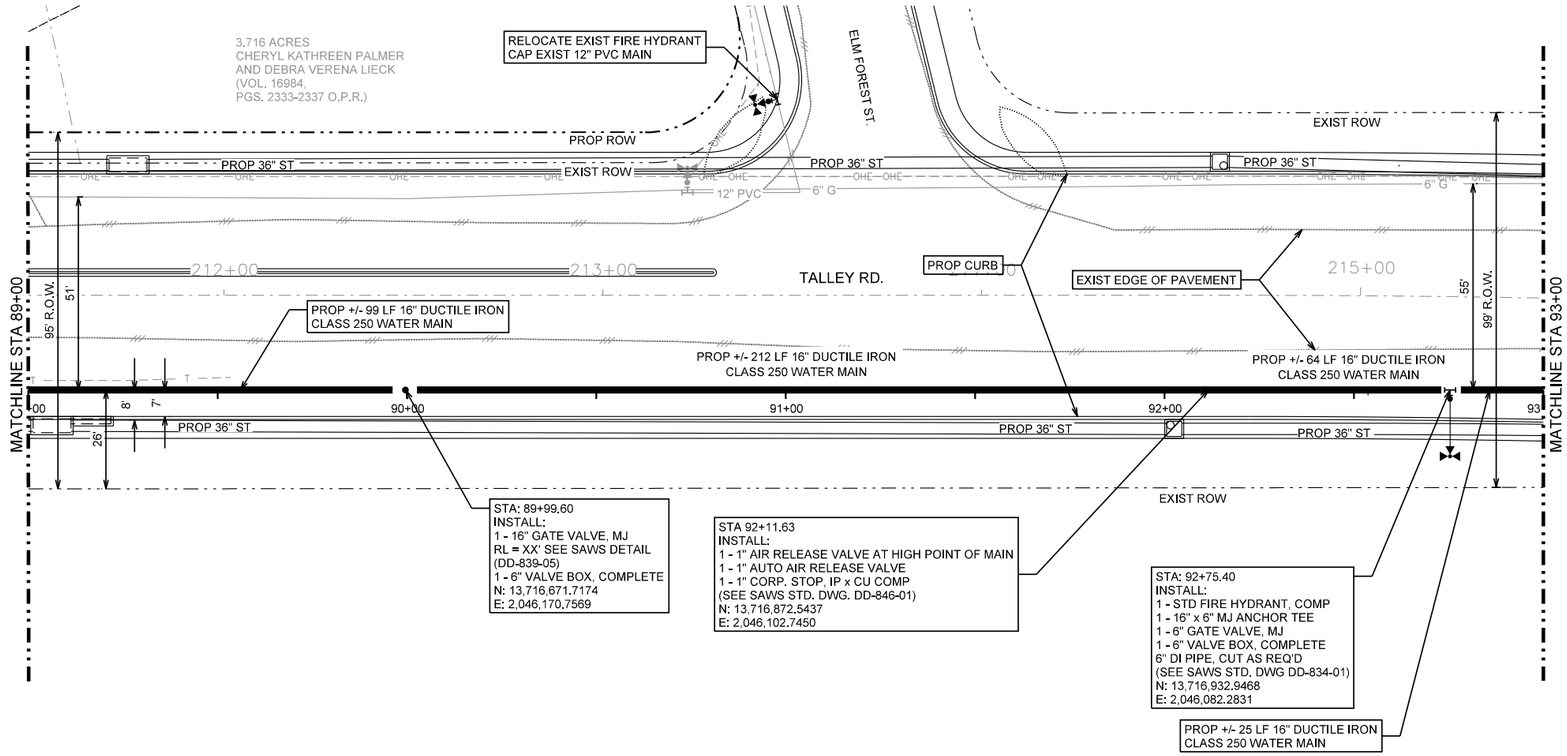

LEGEND

- PROP. WATER MAIN
- EXIST. WATER MAIN — 6"C.I.W.
- GAS MAIN — 2"G
- SANITARY SEWER — 8"SA
- STORM SEWER — 24"ST
- UTILITY POLE LINE
- ELECTRIC CABLE — E
- TELEPHONE CABLE — T
- DUAL BRANCH SERV.
- NEW UNMETERED SERVICE:
  - 3/4" SINGLE
  - 1" DUAL
- SERVICE RECONNECT:
  - 3/4"
  - 1" OR LARGER
- SERVICE RELAY:
  - 3/4"
  - 1" OR LARGER
- SERVICE RELOCATE:
  - 3/4"
  - 1" OR LARGER
- RELOCATE METER
- NEW SERVICE:
  - 3/4"
  - 1" OR LARGER

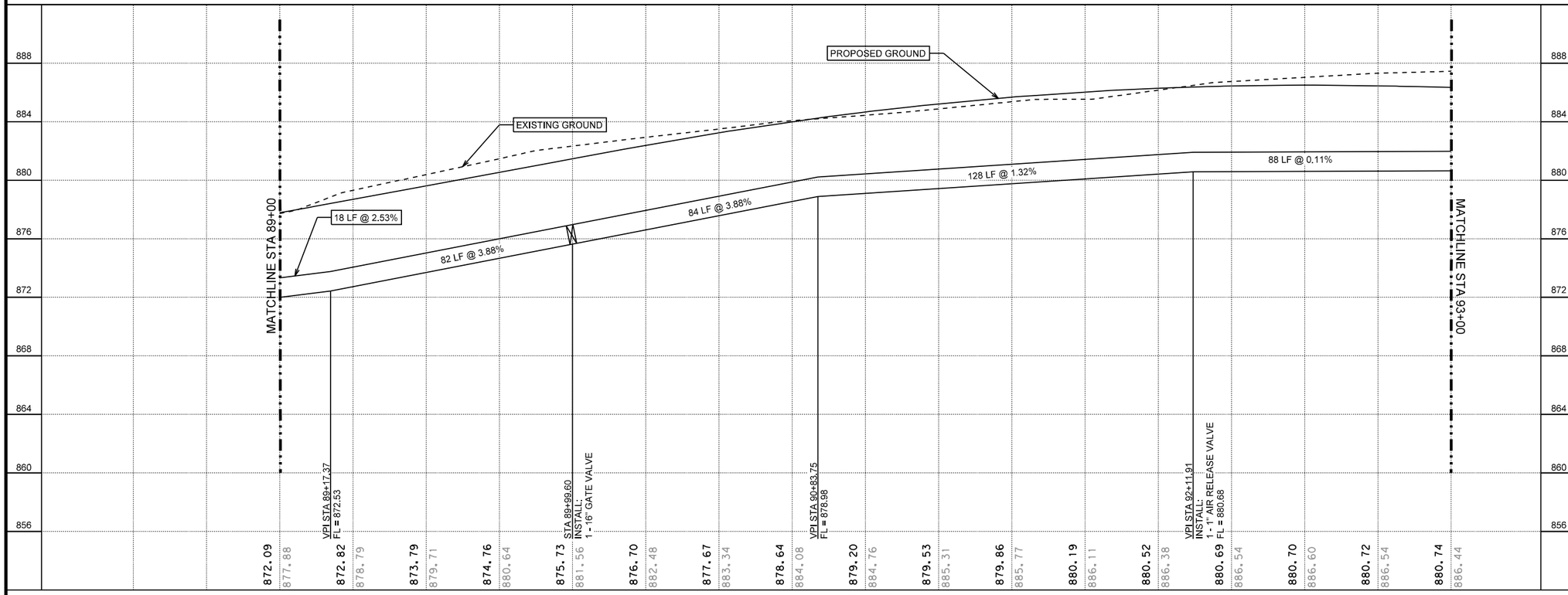

HORIZONTAL SCALE
0 20' 40'
VERTICAL SCALE
0 4' 8'

70% SUBMITTAL

THIS DOCUMENT IS RELEASED FOR THE PURPOSE OF INTERIM REVIEW UNDER THE AUTHORITY OF Michael Persyn, P.E. 96583 2/17/2017

THIS DOCUMENT IS NOT INTENDED FOR BIDDING, PERMITTING AND/OR CONSTRUCTION PURPOSES

70% SUBMITTAL

No.	Revision	Drawn	Approved	Date

REVISIONS

TALLEY ROAD WATER PLANS

WATERLINE A - PLAN AND PROFILE
STA 89+00 TO STA 93+00

DEVELOPER:
CONT. | BUDGET PROJ.
SUBMITTED
APPROVED
MAP No.
SECT. No.
DR. | CK. | JOB No. 16-5020
SHEET 27 OF 31

TRENCH EXCAVATION SAFETY PROTECTION
CONTRACTOR AND/OR CONTRACTOR'S INDEPENDENTLY RETAINED EMPLOYEE OR STRUCTURAL DESIGN/GEOTECHNICAL/SAFETY/EQUIPMENT CONSULTANT, IF ANY SHALL REVIEW THESE PLANS AND AVAILABLE GEOTECHNICAL INFORMATION AND THE ANTICIPATED INSTALLATION SITE(S) WITHIN THE PROJECT WORK AREA IN ORDER TO IMPLEMENT CONTRACTOR'S TRENCH EXCAVATION SAFETY PROTECTION SYSTEM, PROGRAMS AND/OR PROCEDURES, THE CONTRACTOR'S IMPLEMENTATION OF THE SYSTEMS, PROGRAMS AND/OR PROCEDURES SHALL PROVIDE FOR ADEQUATE TRENCH EXCAVATION SAFETY PROTECTION THAT COMPLIES WITH AS A MINIMUM, OSHA STANDARDS FOR TRENCH EXCAVATIONS. SPECIFICALLY, CONTRACTOR AND/OR CONTRACTOR'S INDEPENDENTLY RETAINED EMPLOYEE OF SAFETY CONSULTANT SHALL IMPLEMENT A TRENCH SAFETY PROGRAM IN ACCORDANCE WITH OSHA STANDARDS GOVERNING THE PRESENCE AND ACTIVITIES OF INDIVIDUALS WORKING IN AND AROUND TRENCH EXCAVATION.

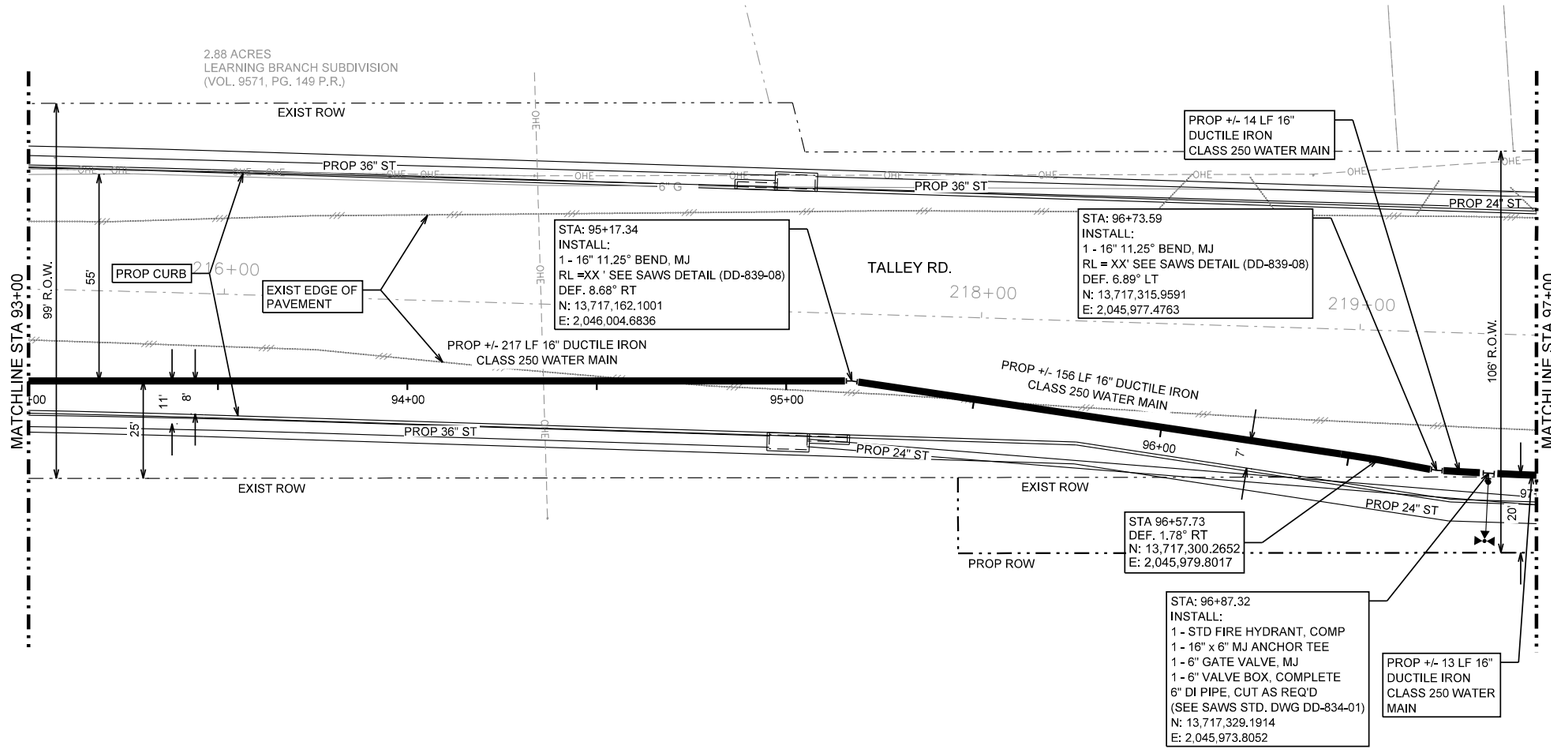

LEGEND

- PROP. WATER MAIN
- EXIST. WATER MAIN — 6"C.I.W.
- GAS MAIN — 2"G
- SANITARY SEWER — 8"SA
- STORM SEWER — 24"ST
- UTILITY POLE LINE
- ELECTRIC CABLE — E
- TELEPHONE CABLE — T
- DUAL BRANCH SERV.
- NEW UNMETERED SERVICE:
  - 3/4" SINGLE
  - 1" DUAL
- SERVICE RECONNECT:
  - 3/4"
  - 1" OR LARGER
- SERVICE RELAY:
  - 3/4"
  - 1" OR LARGER
- SERVICE RELOCATE:
  - 3/4"
  - 1" OR LARGER
- RELOCATE METER
- NEW SERVICE:
  - 3/4"
  - 1" OR LARGER

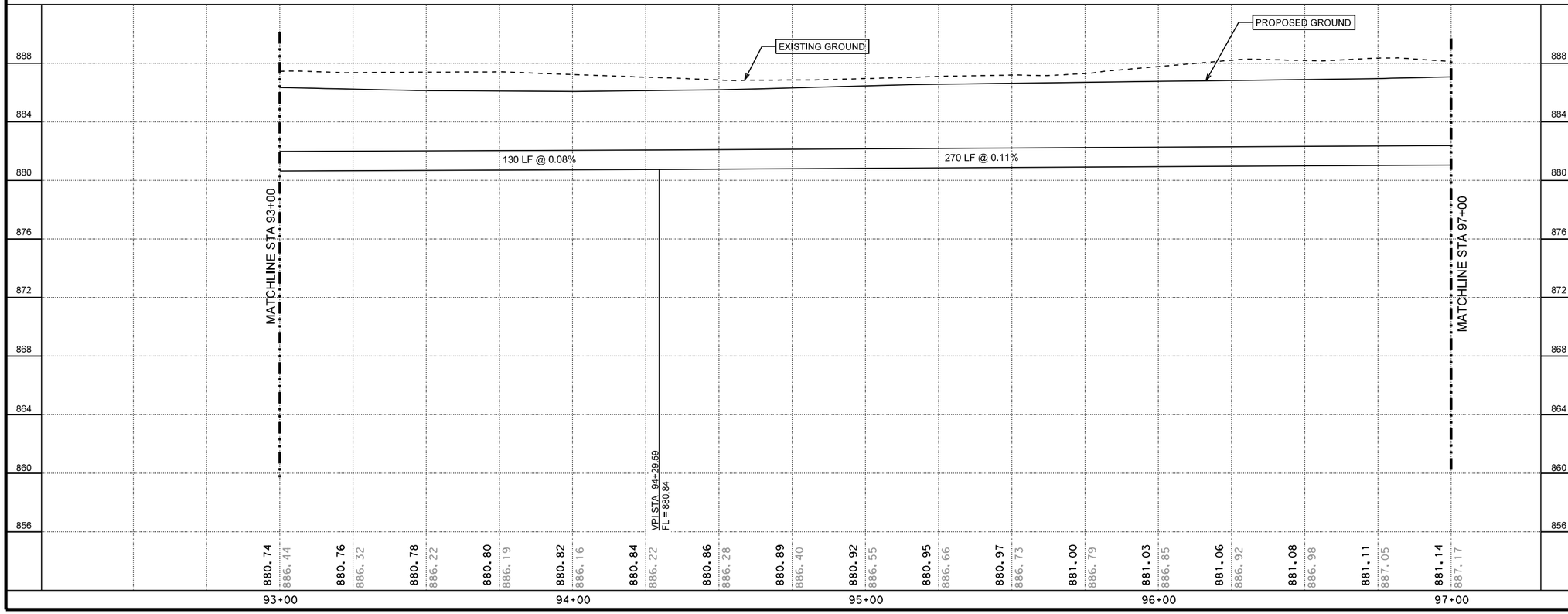

HORIZONTAL SCALE
0 20' 40'
VERTICAL SCALE
0 4' 8'

70% SUBMITTAL

THIS DOCUMENT IS RELEASED FOR THE PURPOSE OF INTERIM REVIEW UNDER THE AUTHORITY OF Michael Persyn, P.E. 96583 2/17/2017

THIS DOCUMENT IS NOT INTENDED FOR BIDDING, PERMITTING AND/OR CONSTRUCTION PURPOSES

70% SUBMITTAL

No.	Revision	Drawn	Approved	Date

REVISIONS

TALLEY ROAD WATER PLANS

WATERLINE A - PLAN AND PROFILE STA 93+00 TO STA 97+00

DEVELOPER:

CONT. | BUDGET PROJ.

SUBMITTED

APPROVED

MAP No. | SHEET

SECT. No. | 28

DR. | CK. | JOB No. 16-5020 | OF 31

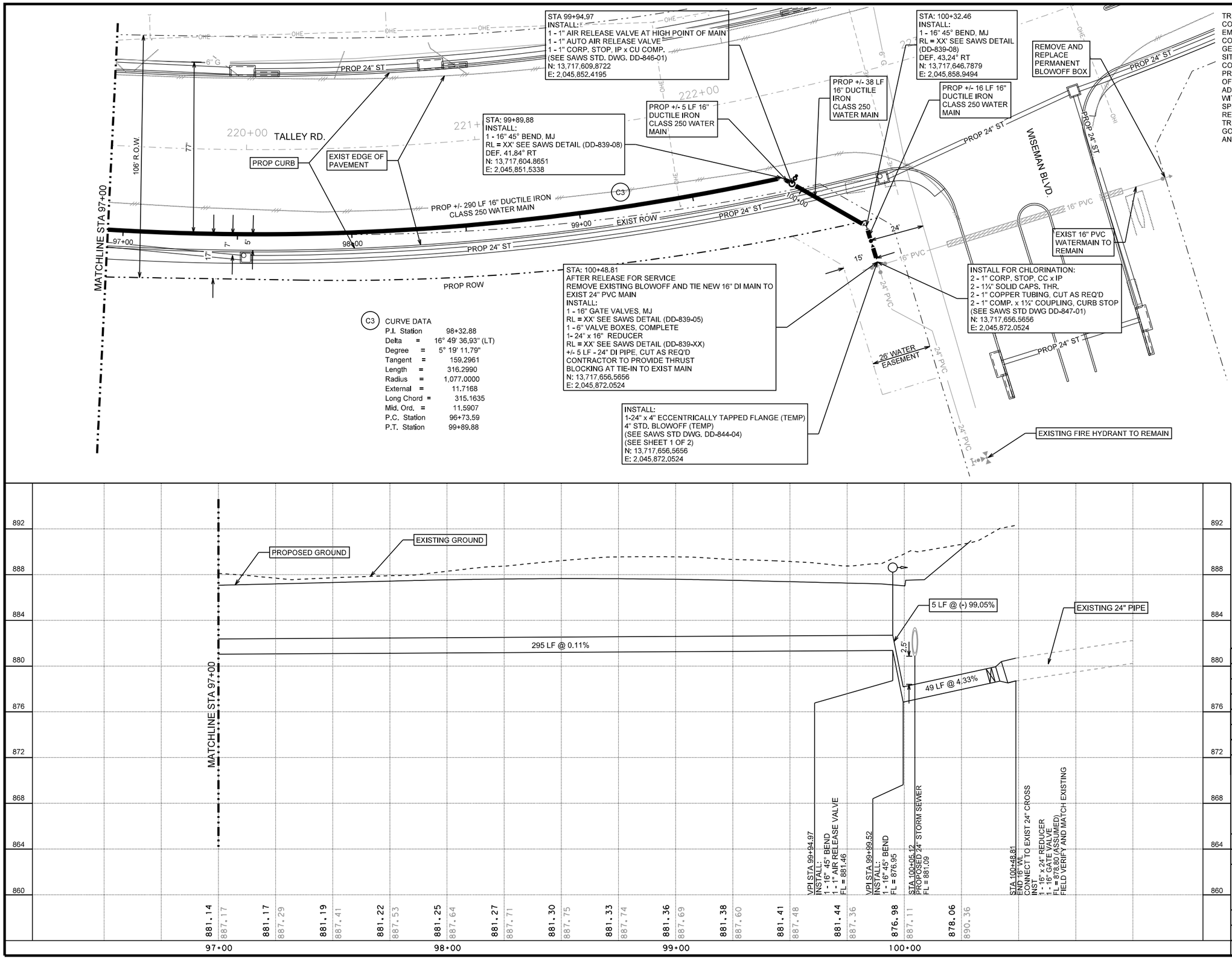

TRENCH EXCAVATION SAFETY PROTECTION
CONTRACTOR AND/OR CONTRACTOR'S INDEPENDENTLY RETAINED EMPLOYEE OR STRUCTURAL DESIGN/GEOTECHNICAL/SAFETY/EQUIPMENT CONSULTANT, IF ANY SHALL REVIEW THESE PLANS AND AVAILABLE GEOTECHNICAL INFORMATION AND THE ANTICIPATED INSTALLATION SITE(S) WITHIN THE PROJECT WORK AREA IN ORDER TO IMPLEMENT CONTRACTOR'S TRENCH EXCAVATION SAFETY PROTECTION SYSTEM, PROGRAMS AND/OR PROCEDURES, THE CONTRACTOR'S IMPLEMENTATION OF THE SYSTEMS, PROGRAMS AND/OR PROCEDURES SHALL PROVIDE FOR ADEQUATE TRENCH EXCAVATION SAFETY PROTECTION THAT COMPLIES WITH AS A MINIMUM, OSHA STANDARDS FOR TRENCH EXCAVATIONS. SPECIFICALLY, CONTRACTOR AND/OR CONTRACTOR'S INDEPENDENTLY RETAINED EMPLOYEE OF SAFETY CONSULTANT SHALL IMPLEMENT A TRENCH SAFETY PROGRAM IN ACCORDANCE WITH OSHA STANDARDS GOVERNING THE PRESENCE AND ACTIVITIES OF INDIVIDUALS WORKING IN AND AROUND TRENCH EXCAVATION.

LEGEND

PROP. WATER MAIN
EXIST. WATER MAIN — 6"C.I.W.
GAS MAIN — 2"G
SANITARY SEWER — 8"SA
STORM SEWER — 24"ST
UTILITY POLE LINE
ELECTRIC CABLE — E
TELEPHONE CABLE — T
DUAL BRANCH SERV.
NEW UNMETERED SERVICE:
3/4" SINGLE
1" DUAL
SERVICE RECONNECT:
3/4"
1" OR LARGER
SERVICE RELAY:
3/4"
1" OR LARGER
SERVICE RELOCATE:
3/4"
1" OR LARGER
RELOCATE METER
NEW SERVICE:
3/4"
1" OR LARGER

HORIZONTAL SCALE
0 20' 40'
VERTICAL SCALE
0 4' 8'

70% SUBMITTAL

THIS DOCUMENT IS RELEASED FOR THE PURPOSE OF INTERIM REVIEW UNDER THE AUTHORITY OF Michael Persyn, P.E. 96583 2/17/2017
THIS DOCUMENT IS NOT INTENDED FOR BIDDING, PERMITTING AND/OR CONSTRUCTION PURPOSES

70% SUBMITTAL

No.	Revision	Drawn	Approved	Date

REVISIONS

TALLEY ROAD WATER PLANS

WATERLINE A - PLAN AND PROFILE STA 97+00 TO END

DEVELOPER:
CONT. | BUDGET PROJ.
SUBMITTED
APPROVED

MAP No. | SHEET 29
SECT. No. | OF 31
DR. | CK. | JOB No. 16-5020

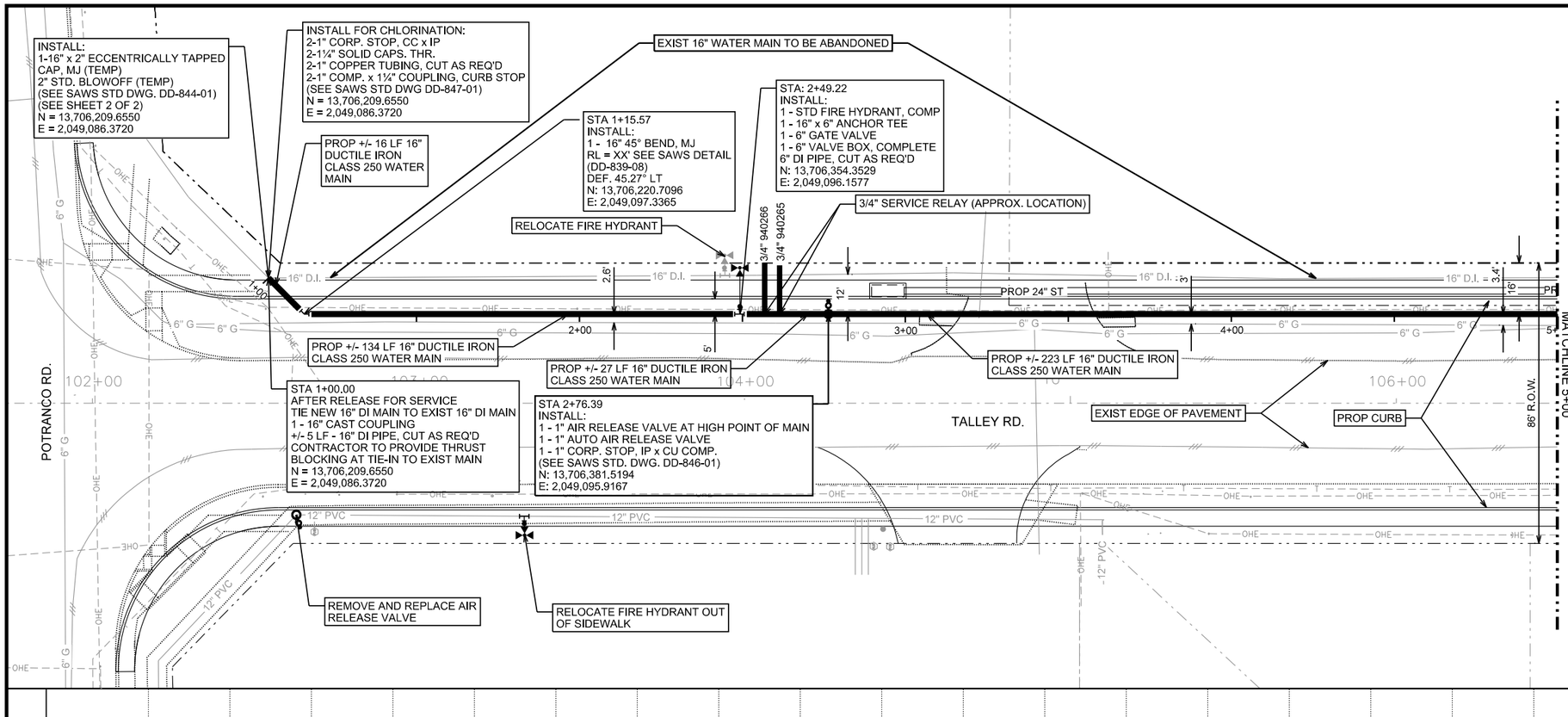

TRENCH EXCAVATION SAFETY PROTECTION
CONTRACTOR AND/OR CONTRACTOR'S INDEPENDENTLY RETAINED EMPLOYEE OR STRUCTURAL DESIGN/GEOTECHNICAL/SAFETY/EQUIPMENT CONSULTANT, IF ANY SHALL REVIEW THESE PLANS AND AVAILABLE GEOTECHNICAL INFORMATION AND THE ANTICIPATED INSTALLATION SITE(S) WITHIN THE PROJECT WORK AREA IN ORDER TO IMPLEMENT CONTRACTOR'S TRENCH EXCAVATION SAFETY PROTECTION SYSTEM, PROGRAMS AND/OR PROCEDURES, THE CONTRACTOR'S IMPLEMENTATION OF THE SYSTEMS, PROGRAMS AND/OR PROCEDURES SHALL PROVIDE FOR ADEQUATE TRENCH EXCAVATION SAFETY PROTECTION THAT COMPLIES WITH AS A MINIMUM, OSHA STANDARDS FOR TRENCH EXCAVATIONS. SPECIFICALLY, CONTRACTOR AND/OR CONTRACTOR'S INDEPENDENTLY RETAINED EMPLOYEE OF SAFETY CONSULTANT SHALL IMPLEMENT A TRENCH SAFETY PROGRAM IN ACCORDANCE WITH OSHA STANDARDS GOVERNING THE PRESENCE AND ACTIVITIES OF INDIVIDUALS WORKING IN AND AROUND TRENCH EXCAVATION.

LEGEND

- PROP. WATER MAIN
- EXIST. WATER MAIN — 6"C.I.W.
- GAS MAIN — 2"G
- SANITARY SEWER — 8"SA
- STORM SEWER — 24"ST
- UTILITY POLE LINE
- ELECTRIC CABLE — E
- TELEPHONE CABLE — T
- DUAL BRANCH SERV.
- NEW UNMETERED SERVICE:
  - 3/4" SINGLE
  - 1" DUAL
- SERVICE RECONNECT:
  - 3/4"
  - 1" OR LARGER
- SERVICE RELAY:
  - 3/4"
  - 1" OR LARGER
- SERVICE RELOCATE:
  - 3/4"
  - 1" OR LARGER
- RELOCATE METER
- NEW SERVICE:
  - 3/4"
  - 1" OR LARGER

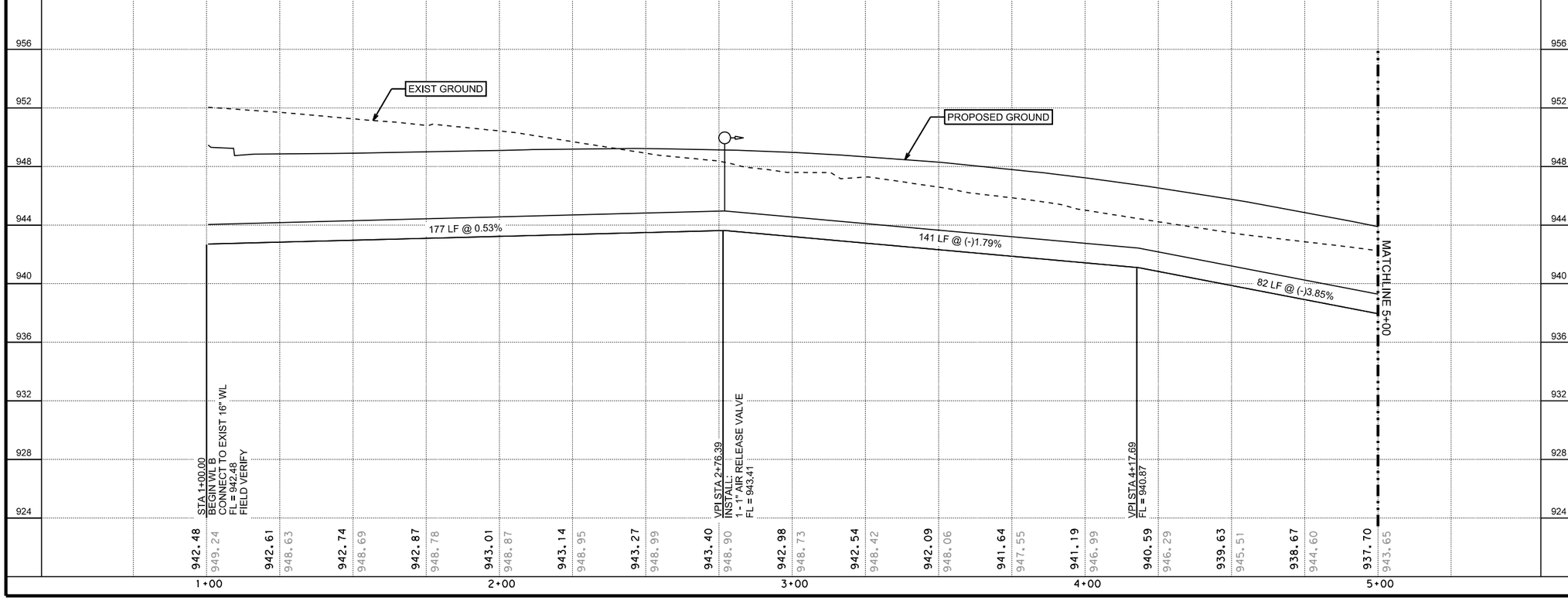

HORIZONTAL SCALE
0 20' 40'
0 4' 8'
VERTICAL SCALE

70% SUBMITTAL

THIS DOCUMENT IS RELEASED FOR THE PURPOSE OF INTERIM REVIEW UNDER THE AUTHORITY OF Michael Persyn, P.E. 96583 2/17/2017
THIS DOCUMENT IS NOT INTENDED FOR BIDDING, PERMITTING AND/OR CONSTRUCTION PURPOSES

70% SUBMITTAL

No.	Revision	Drawn	Approved	Date

REVISIONS

TALLEY ROAD WATER PLANS

WATERLINE B - PLAN AND PROFILE BEGIN TO STA 5+00

DEVELOPER:
CONT. BUDGET PROJ.
SUBMITTED
APPROVED
MAP No.
SECT. No.
DR. CK. JOB No. 16-5020
SHEET 30 OF 31

TRENCH EXCAVATION SAFETY PROTECTION
CONTRACTOR AND/OR CONTRACTOR'S INDEPENDENTLY RETAINED EMPLOYEE OR STRUCTURAL DESIGN/GEOTECHNICAL/SAFETY/EQUIPMENT CONSULTANT, IF ANY SHALL REVIEW THESE PLANS AND AVAILABLE GEOTECHNICAL INFORMATION AND THE ANTICIPATED INSTALLATION SITE(S) WITHIN THE PROJECT WORK AREA IN ORDER TO IMPLEMENT CONTRACTOR'S TRENCH EXCAVATION SAFETY PROTECTION SYSTEM, PROGRAMS AND/OR PROCEDURES, THE CONTRACTOR'S IMPLEMENTATION OF THE SYSTEMS, PROGRAMS AND/OR PROCEDURES SHALL PROVIDE FOR ADEQUATE TRENCH EXCAVATION SAFETY PROTECTION THAT COMPLIES WITH AS A MINIMUM, OSHA STANDARDS FOR TRENCH EXCAVATIONS. SPECIFICALLY, CONTRACTOR AND/OR CONTRACTOR'S INDEPENDENTLY RETAINED EMPLOYEE OF SAFETY CONSULTANT SHALL IMPLEMENT A TRENCH SAFETY PROGRAM IN ACCORDANCE WITH OSHA STANDARDS GOVERNING THE PRESENCE AND ACTIVITIES OF INDIVIDUALS WORKING IN AND AROUND TRENCH EXCAVATION.

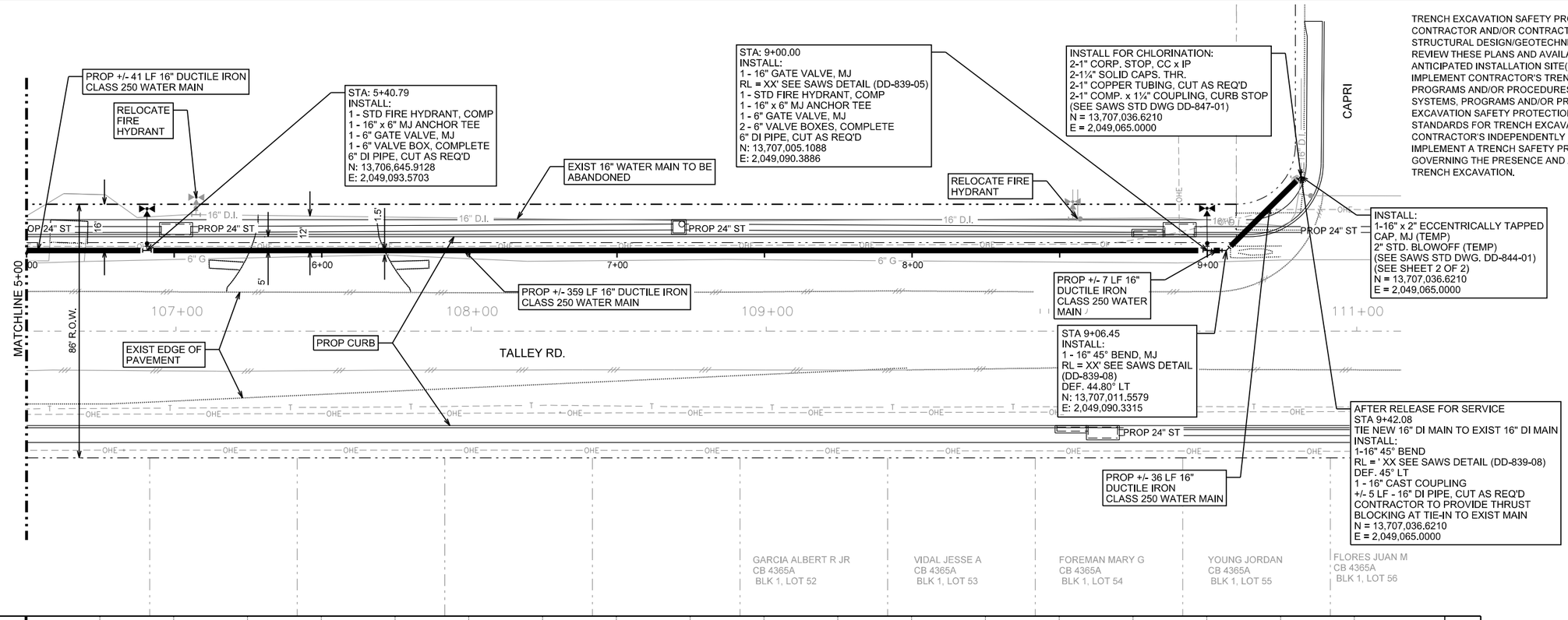

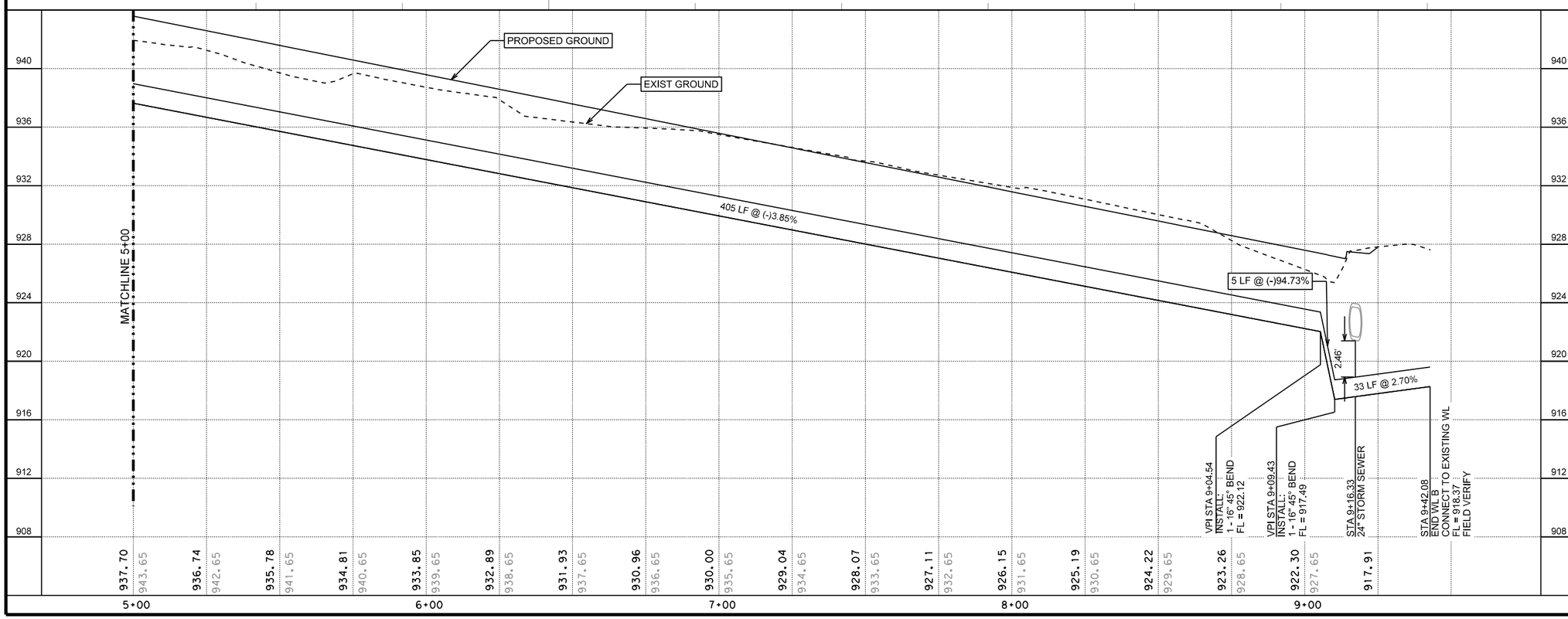

LEGEND

- PROP. WATER MAIN
- EXIST. WATER MAIN — 6"C.I.W.
- GAS MAIN — 2"G
- SANITARY SEWER — 8"SA
- STORM SEWER — 24"ST
- UTILITY POLE LINE
- ELECTRIC CABLE — E
- TELEPHONE CABLE — T
- DUAL BRANCH SERV.
- NEW UNMETERED SERVICE:
  - 3/4" SINGLE
  - 1" DUAL
- SERVICE RECONNECT:
  - 3/4"
  - 1" OR LARGER
- SERVICE RELAY:
  - 3/4"
  - 1" OR LARGER
- SERVICE RELOCATE:
  - 3/4"
  - 1" OR LARGER
- RELOCATE METER
- NEW SERVICE:
  - 3/4"
  - 1" OR LARGER

HORIZONTAL SCALE
0 20' 40'
VERTICAL SCALE
0 4' 8'

70% SUBMITTAL

THIS DOCUMENT IS RELEASED FOR THE PURPOSE OF INTERIM REVIEW UNDER THE AUTHORITY OF Michael Persyn, P.E. 96583 2/17/2017
THIS DOCUMENT IS NOT INTENDED FOR BIDDING, PERMITTING AND/OR CONSTRUCTION PURPOSES

70% SUBMITTAL

No.	Revision	Drawn	Approved	Date

REVISIONS

TALLEY ROAD WATER PLANS

WATERLINE B - PLAN AND PROFILE STA 5+00 TO END

DEVELOPER:
CONT. | BUDGET PROJ.
SUBMITTED
APPROVED
MAP No.
SECT. No.
DR. | CK. | JOB No. 16-5020
SHEET 31 OF 31