INFRASTRUCTURE SERVICES DEPARTMENT
PUBLIC WORKS DIVISION

MEMORIAL LANE
IFB 2010-011

DESIGN SPEED = 30 MPH
PROJECT LENGTH= 1,935 FT

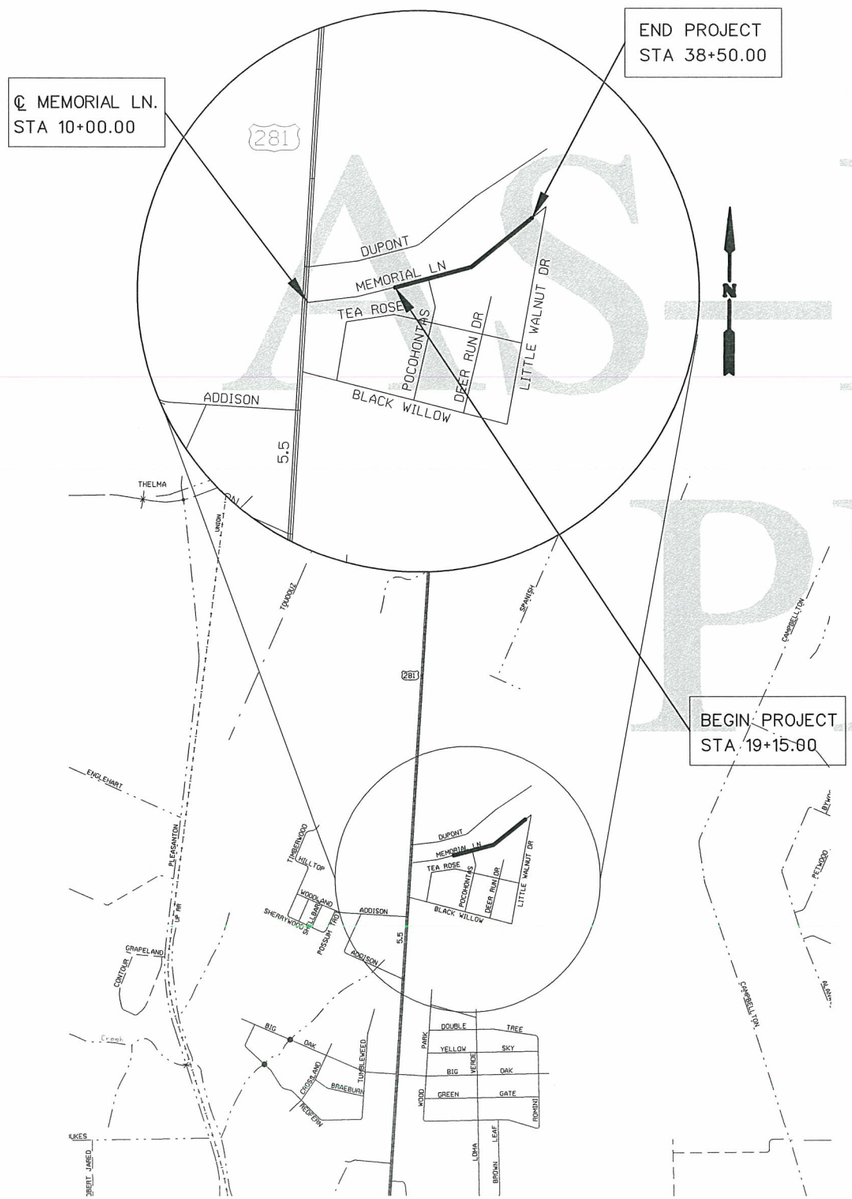

AS-BUILT PLANS

NELSON W. WOLFF	BEXAR COUNTY JUDGE
SERGIO "CHICO" RODRIGUEZ	COMMISSIONER PCT. 1
PAUL ELIZONDO	COMMISSIONER PCT. 2
KEVIN A. WOLFF	COMMISSIONER PCT. 3
TOMMY ADKISSON	COMMISSIONER PCT. 4
JOE ACEVES, P.E.	EXECUTIVE DIRECTOR OF INFRASTRUCTURE SERVICES
RENEE' D. GREEN, P.E.	COUNTY ENGINEER

PREPARED BY:

CP&Y
TBPE FIRM REGISTRATION NO: 1741

300 EAST SONTERRA BLVD.,SUITE 1250
SAN ANTONIO,TX 78258
(210) 494-8004

Reginald Fountain, P.E.
10/11/10

STATE OF TEXAS
REGINALD FOUNTAIN
97328
LICENSED
PROFESSIONAL ENGINEER

REGINALD FOUNTAIN, P.E.
PROJECT MANAGER

c:\pwworking\rfountain\d0101294\8047TS01.999
10/11/2010
2:46:33 PM

A-1014-00-69

TABLE OF CONTENTS

SHEET	DESCRIPTION	
	I. GENERAL	
1	TITLE SHEET	
2	TABLE OF CONTENTS	
3	ESTIMATED QUANTITIES	
4	TYPICAL SECTIONS	
5	GENERAL NOTES	
6	TRAFFIC NOTES AND SPECIAL CONDITIONS	
	II. TRAFFIC CONTROL PLAN	
7	TCP GENERAL NOTES/PHASE NARRATIVE	
8	BC (1)-07	TXDOT STANDARDS
9	BC (2)-07	
10	BC (3)-07	
11	BC (4)-07	
12	BC (5)-07	
13	BC (6)-07	
14	BC (7)-07	
15	BC (8)-07	
16	BC (9)-07	
17	BC (10)-07	
18	BC (11)-07	
19	BC (12)-07	
20	TCP (2-2)-03	
21	WZ (TD)-03	
22	WZ (BRK)-03	
	III. ROADWAY DETAILS	
23	HORIZONTAL DATA SHEET	
24-28	PLAN AND PROFILE SHEETS	
29	DRIVEWAY SUMMARY	TXDOT STANDARDS
30-32	MB-06(1)	
	IV. DRAINAGE DETAILS	
33	DRAINAGE AREA MAP	
34	CULVERT PLAN & PROFILE SHEETS	
35	CULVERT COMPUTATIONS	
36	DRAINAGE DITCH TABLES	
37	BCS	
38	D& OM (1)-09	
39	SCP-MD	
40	PW	
	V. ENVIRONMENTAL ISSUES	
41	STORM WATER PREVENTION PLAN (SW3P)	
42-43	SW3P LAYOUTS	
44	EC (1)-93	TXDOT STANDARDS
45	EC (2)-93	
46	EC (3)-93	
	VI. CROSS SECTIONS	
47-62	PROPOSED CROSS SECTIONS	

Reginald Fountain P.E. 10/30/09

STATE OF TEXAS
REGINALD FOUNTAIN
97328
LICENSED
PROFESSIONAL ENGINEER

NO.	REVISION	BY	DATE

CP&Y

TBPE FIRM REGISTRATION NO: 1741

BEXAR COUNTY
PUBLIC WORKS DIVISION

HIGHLAND OAKS SUBDIVISION-MEMORIAL LANE

TABLE OF CONTENTS

SHEET 1 OF 1

Designed: RTF	STATE	BEXAR COUNTY FILE NUMBER	PLAN SET NO.
Checked: JA	TEXAS		2
Drawn: RTF	COUNTY		OF
Checked: JA	BEXAR		62

C:\PWWorking\rfountain\d0101294\B047T0C01.999
10/30/2009
4:31:23 PM

ESTIMATED QUANTITIES FOR MEMORIAL LANE

ITEM NO.				QUANTITY	
COSA	TxDOT	DESCRIPTION	UNIT	AS-BID	AS-BUILT
100.1		MOBILIZATION	LS	1.0	1.0
100.2		INSURANCE AND BOND	LS	1.0	1.0
101.1		PREPARING RIGHT-OF-WAY	LS	1.0	1.0
104.1		STREET EXCAVATION	CY	2842.0	2842.0
107.1		EMBANKMENT (FINAL) (ORD COMP) (TY A)	CY	581.0	581.0
200.1		FLEXIBLE BASE (8" COMPACTED DEPTH)(TY A)	SY	7105.0	7105.0
202.1		PRIME COAT	GAL	1421.0	1421.0
204.2		TWO COURSE SURFACE TREATMENT	SY	7105.0	7105.0
404.2		CORRUGATED METAL PIPE ARCH	LF	484.0	484.0
503.6		TWO COURSE DRIVEWAY	SY	299.0	299.0
515.1		TOPSOIL (4")	CY	593.0	593.0
516.1		BERMUDA SODDING	SY	1778.0	2728.0
530.1		BARRICADES, SIGNS & TRAFFIC HANDLING	LS	1.0	1.0
	169-2006	SOIL RETENTION BLANKETS (CL 2) (TY F)	SY	321.0	0.0
	400-2002	STRUCT EXCAV (BOX)	CY	37.0	37.0
	432-2001	RIPRAP (CONC) (4 IN)	CY	44.0	64.0
	462-2038	CONC BOX CULV (6 FT X 2 FT)	LF	46.0	46.0
	466-2048	WINGWALL (PW) (HW=4 FT)	EA	2.0	2.0
	506-2002	ROCK FILTER DAMS (INSTALL) (TY 2)	LF	50.0	50.0
	506-2009	ROCK FILTER DAMS (REMOVE)	LF	50.0	0.0
	506-2016	CONSTRUCTION EXITS (INSTALL) (TY 1)	SY	78.0	78.0
	506-2019	CONSTRUCTION EXITS (REMOVE)	SY	78.0	0.0
	506-2034	TEMPORARY SEDIMENT CONTROL FENCE	LF	183.0	179.0
	658-2316	INSTL OM ASSM (OM - 2Z) (FLX) GND	EA	2.0	2.0

Reginald Fountain P.E.
10/11/10

STATE OF TEXAS
REGINALD FOUNTAIN
97328
LICENSED
PROFESSIONAL ENGINEER

NO.	REVISION	BY	DATE

CP&Y
TBPE FIRM REGISTRATION NO: 1741

BEXAR COUNTY
PUBLIC WORKS DIVISION

HIGHLAND OAKS SUBDIVISION-MEMORIAL LANE

ESTIMATED QUANTITIES

SHEET 1 OF 1

Designed: RTF	STATE	BEXAR COUNTY FILE NUMBER	PLAN SET NO.
Checked: JA	TEXAS		
Drawn: RTF	COUNTY		OF
Checked: JA	BEXAR		

c:\pwworking\rfountain\d0101294\8047Quan101.999
10/11/2010
1:01:11 PM

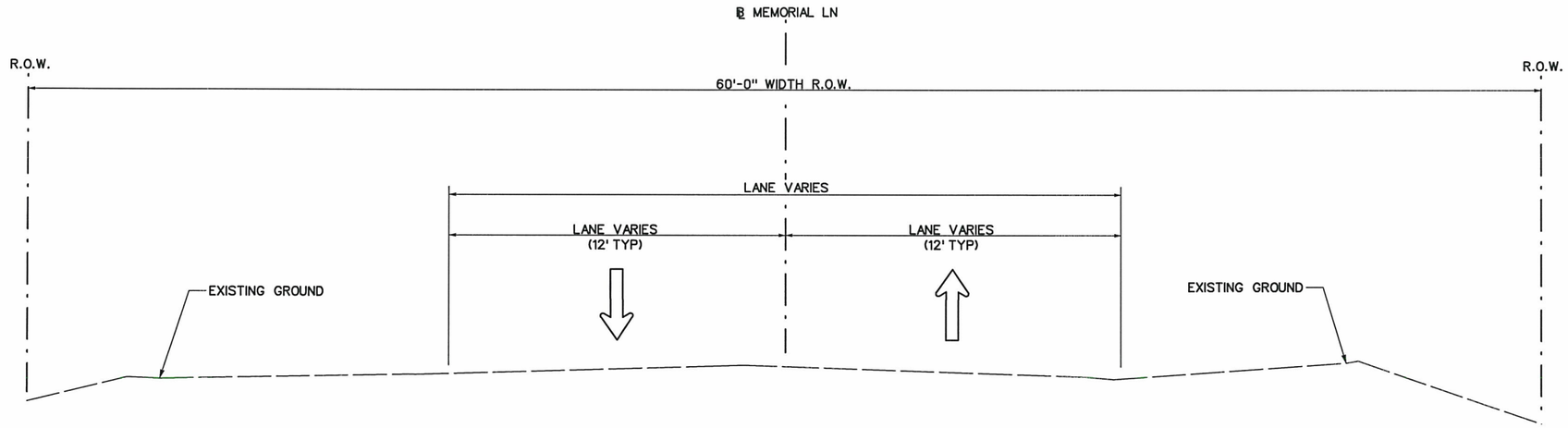

EXISTING TYPICAL SECTION

N.T.S.

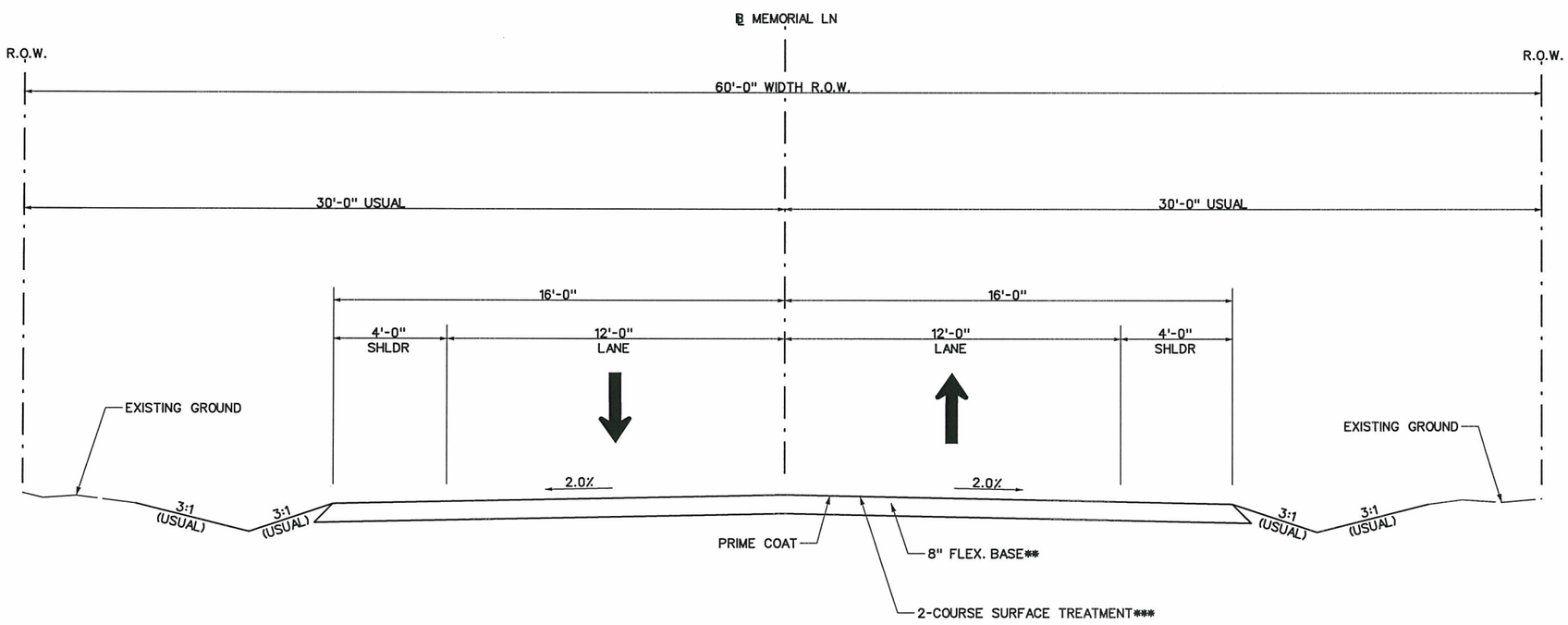

TWO-COURSE SURFACE TREATMENT
* ASPHALT EMULSION- CRS-2P
-1ST COURSE - 0.25 gal/sy
-2ND COURSE- 0.35 gal/sy
TOTAL EMULSION NOT TO EXCEED 0.60 gal/sy
* AGGREGATE (TRAP ROCK)
-1ST COURSE - TYPE PB (TRAP ROCK), GRADE 3 @ 1 cy/ 90 sy
-2ND COURSE - TYPE PB (TRAP ROCK), GRADE 4 @ 1 cy/110 sy

PROPOSED TYPICAL SECTION

N.T.S.

** FROM STA 38+40.00 TO STA 38+45.00 VARIES FROM 8"-12" THICKNESS,
FROM STA 38+45.00 TO STA 38+50.00 12" THICKNESS

Reginald Fountain P.E.
10/30/09

STATE OF TEXAS
REGINALD FOUNTAIN
97328
LICENSED
PROFESSIONAL ENGINEER

NO.	REVISION	BY	DATE

CP&Y
TBPE FIRM REGISTRATION NO: 1741

BEXAR COUNTY
PUBLIC WORKS DIVISION

HIGHLAND OAKS SUBDIVISION–MEMORIAL LANE

TYPICAL SECTIONS

SHEET 1 OF 1

Designed: RTF	STATE	BEXAR COUNTY FILE NUMBER	PLAN SET NO.
Checked: JA	TEXAS		4
Drawn: RTF	COUNTY		OF
Checked: JA	BEXAR		62

C:\PWWorking\rfountain\d0101294\B047GT01.999
10/29/2009
1:32:18 PM

GENERAL NOTES

1.ALL CONSTRUCTION AND MATERIALS TO BE IN ACCORDANCE WITH THE CITY OF SAN ANTONIO "STANDARD SPECIFICATIONS FOR PUBLIC WORKS CONSTRUCTION" DATED JUNE, 2008 WITH ALL APPLICABLE AMENDMENTS, AND/OR 2004 TXDOT STANDARD SPECIFICATIONS FOR CONSTRUCTION AND MAINTENANCE OF HIGHWAYS, STREETS AND BRIDGES WITH ANY REVISIONS THERETO, AND ANY SPECIAL SPECIFICATIONS ISSUED FOR THE PROJECT UNLESS OTHERWISE SPECIFIED.

2.NO EXTRA PAYMENT SHALL BE ALLOWED FOR WORK CALLED FOR ON THE PLANS, BUT NOT INCLUDED ON THE BID SCHEDULE. THIS INCIDENTAL WORK WILL BE REQUIRED AND SHALL BE INCLUDED IN THE PAY ITEM TO WHICH IT RELATES.

3.CONFLICTS IN THE PLANS AND/OR SPECIFICATIONS FOUND BY THE CONTRACTOR SHALL BE PROMPTLY REPORTED TO THE INSPECTOR BEFORE PROCEEDING WITH CONSTRUCTION.

4.BIDDERS ARE HEREBY NOTIFIED TO MAKE SUBSURFACE INVESTIGATIONS AS THEY DEEM NECESSARY. NO ADDITIONAL PAYMENT SHALL BE MADE FOR ROCK, SAND, GRAVEL OR OTHER UNSTABLE CONDITIONS ENCOUNTERED IN STREET EXCAVATION, BOX CULVERT EXCAVATION, STRUCTURAL EXCAVATION, OR CHANNEL EXCAVATION.

5.THE CONTRACTOR SHALL LIMIT WORK ACTIVITIES TO THE STREET RIGHTS-OF-WAY AND EASEMENTS. NO PROVISIONS HAVE BEEN MADE FOR WORK ACTIVITIES OR STORAGE OF MATERIALS AND/OR EQUIPMENT ON PRIVATE PROPERTY.

6.THE CONTRACTOR SHALL PRESERVE ALL CONSTRUCTION STAKES, MARKERS, ETC. ANY CONSTRUCTION STAKES, MARKERS, ETC., REMOVED BY THE CONTRACTOR OR THE CONTRACTOR'S EMPLOYEES SHALL BE REPLACED AT THE CONTRACTOR'S EXPENSE.

7.DUE TO FEDERAL REGULATIONS TITLE 49, PART 192.181, GAS UTILITY OWNERS MUST MAINTAIN ACCESS TO GAS VALVES AT ALL TIMES. THE CONTRACTOR MUST PROTECT AND WORK AROUND ANY GAS VALVES THAT ARE IN THE PROJECT AREA.

8.DURING THE CONSTRUCTION, THE CONTRACTOR SHALL BE RESPONSIBLE FOR MAINTENANCE OF FENCING. DAMAGED FENCING SHALL BE REPLACED WITH EQUAL OR BETTER MATERIALS AND WORKMANSHIP. THE CONTRACTOR SHALL COORDINATE WITH THE LANDOWNER FOR WORK WITHIN PRIVATE PROPERTY. EASEMENT FENCES MAY BE REMOVED AND REPLACED AS REQUIRED. IT SHALL BE THE CONTRACTOR'S RESPONSIBILITY TO MAINTAIN AND SET UP TEMPORARY FENCING FOR LIVESTOCK AS NECESSARY FOR ALL PHASES OF WORK. NO SEPARATE PAYMENT SHALL BE MADE FOR MAINTAINING FENCING.

9.TREE REMOVAL NECESSITATED BY CONSTRUCTION ACTIVITIES WILL BE THE RESPONSIBILITY OF THE CONTRACTOR AND WILL BE SUBSIDIARY TO THE VARIOUS BID ITEMS FOR THE PROJECT. TREES TO BE PROTECTED FROM DAMAGE ARE SPECIFICALLY IDENTIFIED IN THE PLANS. ALL TREES WHICH ARE DESIGNATED FOR PROTECTION AND ARE DAMAGED BY THE CONTRACTOR SHALL BE COMPENSATED FOR OR REPLACED BY THE CONTRACTOR TO THE SATISFACTION OF BEXAR COUNTY OR THE PROPERTY OWNER.

10.CONTRACTOR SHALL PROVIDE INDEPENDENTLY RETAINED STRUCTURAL DESIGN/GEOTECHNICAL/SAFETY EQUIPMENT CONSULTANTS FOR ANY ANTICIPATED ACTIVITIES WITHIN THE PROJECT WORK AREA AS DESCRIBED IN THE CONTRACT DOCUMENTS.

11.THE CONTRACTOR'S PLANS SHALL PROVIDE ADEQUATE TRENCH SAFETY SYSTEMS THAT COMPLYWITH, AS A MINIMUM, OSHA STANDARDS FOR TRENCH EXCAVATIONS. SPECIFICALLY, CONTRACTOR AND/OR CONTRACTOR'S INDEPENDENTLY RETAINED EMPLOYEE OR SAFETY CONSULTANT SHALL DEVELOP STANDARDS GOVERNING THE PRESENCE AND ACTIVITIES OF INDIVIDUALS WORKING IN AND AROUND TRENCH EXCAVATION.

12.THE CONTRACTOR SHALL MAINTAIN ALL ADJOINING STREETS AND TRAVELED ROUTES FREE FROM SPILLED AND/OR TRACKED CONSTRUCTION MATERIALS.

13.ANY CAVERN OR SOLUTION CHANNELS ENCOUNTERED DURING CONSTRUCTION SHALL BE REPORTED TO THE ENGINEER AND THE TEXAS COMMISSION ON ENVIRONMENTAL QUALITY (TCEQ) REGION 13 OFFICE WITH A REQUEST FOR APPROVAL OF CONSTRUCTION.

14.ALL WASTE MATERIAL SHALL BECOME THE PROPERTY OF THE CONTRACTOR AND IT WILL BE HIS SOLE RESPONSIBILITY TO DISPOSE OF THIS MATERIAL OFF THE LIMITS OF THE RIGHT-OF-WAY AND TO PRIVATE PROPERTY WHERE THE CONTRACTOR HAS THE WRITTEN CONSENT OF THE OWNERS. NO WASTE MATERIALS SHALL BE PLACED IN EXISTING LOWS THAT WILL BLOCK OR ALTER FLOW LIMITS OF EXISTING NATURAL DRAINAGE. THE CONTRACTOR SHALL NOT PLACE ANY WASTE MATERIALS IN THE 100-YEAR FLOODPLAIN WITHOUT FIRST OBTAINING A FLOOD PLAIN DEVELOPMENT PERMIT FROM THE APPROPRIATE ENTITY.

15.CONTRACTOR IS TO MAINTAIN UNRESTRICTED DRAINAGE OF THE PROJECT SITE AND ADJACENT AREAS DURING CONSTRUCTION.

16.AFTER COMPLETION OF ALL WORK, THE CONTRACTOR SHALL REMOVE ALL DEBRIS FROM THE RIGHT-OF-WAY AND LEAVE THE WORK AREA NEAT AND CLEAN. ANY TEMPORARY FILL TO FACILITATE CONSTRUCTION SHALL BE REMOVED AND DISPOSED OF IN A MANNER APPROVED BY THE COUNTY ENGINEER.

17.ALL DISTURBED AREAS SHALL BE FINISHED WITH TOPSOIL AND HYDROMULCH OR SOD AS NOTED ON THE PLANS.

18.CONTRACTOR TO VERIFY EXISTING ELEVATIONS AT ALL TIE-IN LOCATIONS PRIOR TO CONSTRUCTION. NOTIFY ENGINEER IF SIGNIFICANT DISCREPANCIES EXIST.

19.THE EXISTING CONDITIONS AND UTILITIES SHOWN ON THE PLANS WERE DETERMINED AT THE TIME OF PLAN PREPARATION (MONTH, YEAR). THE UTILITY LOCATIONS SHOWN ARE APPROXIMATE ONLY. THE ACTUAL LOCATIONS AND DEPTHS OF UTILITIES SHOWN ON THE PLANS INCLUDING THOSE WHICH HAVE BEEN ADDED, ELIMINATED, ADJUSTED AND/OR RELOCATED AFTER THE AFOREMENTIONED DATE OF PLAN PREPARATION MUST BE VERIFIED BY THE CONTRACTOR PRIOR TO CONSTRUCTION. THE CONTRACTOR SHALL BE RESPONSIBLE FOR DAMAGES TO THE EXISTING UTILITIES DUE TO NEGLIGENCE OF THE CONTRACTOR OR DUE TO EXCAVATION OUTSIDE OF THE DEFINED CONSTRUCTION LIMITS OF THIS PROJECT. CONTRACTOR SHALL HAVE THE SOLE RESPONSIBILITY OF FIELD VERIFYING EACH UTILITY LOCATION AND COORDINATING AND NOTIFYING OWNERS AT LEAST SEVENTY-TWO (72) HOURS PRIOR TO EXCAVATION. CONTRACTOR SHALL BE RESPONSIBLE FOR ACQUIRING ALL PERMITS, TESTS, APPROVALS AND ACCEPTANCES REQUIRED TO COMPLETE CONSTRUCTION OF THIS PROJECT.

20.CONTRACTOR SHALL NOTIFY THE COUNTY AT 0) 335-6700 TWENTY FOUR (24) HOURS PRIOR TO THE BACKFILL OF ANY TRENCHES TO SCHEDULE FOR DENSITY TESTING AS REQUIRED.

21.IF SUSPECTED CONTAMINATION IS ENCOUNTERED DURING CONSTRUCTION OPERATIONS, BEXAR COUNTY SHALL BE NOTIFIED IMMEDIATELY. THE NOTIFICATION SHOULD INCLUDE THE STATION NUMBER, TYPE OF CONTAMINATED MEDIA, EVIDENCE OF CONTAMINATION AND MEASURES TAKEN TO CONTAIN THE CONTAMINATED MEDIA AND PREVENT PUBLIC ACCESS. THE CONATMINATED SOIIL AND/OR GROUNDWATER SHALL NOT BE REMOVED FROM THE LOCATION WITHOUT PRIOR BEXAR COUNTY APPROVAL. THE CONTRACTOR MUST STOP THE EXCAVATION IMMEDIATELY AND CONTACT THE BEXAR COUNTY INSPECTOR. THE CONTRACTOR WILL NOT RE-COMMENCE EXCAVATION ACITIVITIES WITHOUT WRITTEN PERMISSION FROM BEXAR COUNTY.

22.LOCATION OF ALL CONCRETE FOUNDATIONS SHALL BE APPROVED BY THE ENGINEER PRIOR TO INSTALLATION.

23.ALL SPOILS FROM EXCAVATION SHALL BE PLACED IN A TRUCK OR TRAILER TO BE REMOVED DAILY AND SHALL NOT BE PLACED ON THE GROUND OR ROADWAY.

24.ANY MATERIALS REMOVED AND NOT REUSED AND DETERMINED TO BE SALVAGEABLE SHALL BE RESTORED WITHIN THE PROJECT LIMITS AT AN APPROVED LOCATION OR DELIVERED UNDAMAGED TO THE STORAGE YARD AS DIRECTED. PROPERLY DISPOSE UNSALVAGEABLE MATERIALS IN ACCORDANCE WITH LOCAL, STATE, AND FEDERAL REGULATIONS. DEFACE TRAFFIC SIGNS SO THAT THEY WILL NOT REAPPEAR IN PUBLIC AS SIGNS.

25.CONTRACTOR SHALL BE RESPONSIBLE FOR RESTORING TO ORIGINAL CONDITION, OR BETTER, ANY DAMAGE DONE TO EXISTING BUILDINGS, RETAINING WALLS, UTILITIES, FENCES, PAVEMENT, CURBS OR DRIVEWAYS (NO SEPARATE PAY ITEM). CONTRACTOR SHALL RESTORE THE CONSTRUCTION AREA TO ORIGINAL CONDITION, OR BETTER, PRIOR TO FINAL INSPECTION.TRAFFIC NOTES

26.CONTRACTOR IS RESPONSIBLE FOR KEEPING STREETS AND SIDEWALKS ADJACENT TO THE PROJECT FREE OF MUD AND DEBRIS FROM THE CONSTRUCTION AT ALL TIMES.

27.IT IS THE RESPONSIBILITY OF THE CONTRACTOR TO MAINTAIN ALL EROSION CONTROL FACILITIES BEFORE, DURING AND AFTER ALL CONSTRUCTOIN ACTIVITIES IN ACCORDANCE WITH ALL LOCAL, STATE, AND FEDERAL REGULATIONS.

28.ALL JOINTS, SEALS, CONNECTIONS, AND MODIFICATIONS NECESSARY FOR PROPER INSTALLATION OF RCP SAHLL BE SUBSIDIARY TO THE RCP PAY ITEM.

29.FOR PEDESTRIAN SAFETY, THE CONTRACTOR SHALL INSTALL ORANGE PLASTIC CONSTRUCTION FENCING (4 FEET TALL MINIMUM) AROUND ALL OPEN EXCAVATIONS OR AS DIRECTED BY THE ENGINEER. SUCH FENCING SHALL NOT OBSTRUCT SIGHT LINES OF THE TRAVELING PUBLIC.

30.CONTRACTOR SHALL BE RESPONSIBLE FOR CLEARING ANY CONSTRUCTION MATERIALS FROM ADJACENT WATERWAYS AFTER A FLOOD EVENT. REPAIR OF ANY DAMAAGES TO DRAINAGE STRUCTURES IN THE PROJECT AREA, OR DOWNSTREAM CAUSED BY CONSTRUCTION DEBRIS SHALL BE THE SOLE RESPONSIBILITY OF THE CONTRACTOR.

31.PREPARATION OF RIGHT OF WAY SHALL INCLUDE ALL DRIVEWAY PENETRATION AREAS.

NO.	REVISION	BY	DATE

CP&Y

TBPE FIRM REGISTRATION NO: 1741

BEXAR COUNTY
PUBLIC WORKS DIVISION

HIGHLAND OAKS SUBDIVISION–MEMORIAL LANE

GENERAL NOTES

SHEET 1 OF 1

Designed: RTF	STATE	BEXAR COUNTY FILE NUMBER	PLAN SET NO.
Checked: JA	TEXAS		5
Drawn: RTF	COUNTY		OF
Checked: JA	BEXAR		62

C:\PWWorking\rgonzales\d0101294\8047GenNotes.dwg
10/29/2009 7:05:56 PM

TRAFFIC NOTES
GENERAL AND SPECIAL CONDITIONS

1. IT IS THE CONTRACTOR'S SOLE RESPONSIBILITY TO SEE THAT ALL TRAFFIC CONTROL DEVICES ARE PROPERLY INSTALLED AND MAINTAINED AT THE JOB SITE IN ACCORDANCE WITH THE PLANS, SPECIFICATIONS AND RELATED INDUSTRY STANDARDS AND REGULATIONS. THE CONTRACTOR SHALL SUBMIT FOR REVIEW A SIGN AND BARRICADE PLAN CONFORMING TO THE REQUIREMENTS OF THE 'TEXAS MUTCD'. THE COUNTY'S CONSTRUCTION INSPECTOR AND THE TRAFFIC ENGINEERING REPRESENTATIVE WILL ONLY BE RESPONSIBLE TO INSPECT THE TRAFFIC CONTROL DEVICES BEING DEPLOYED. IF IN THE OPINION OF THE TRAFFIC ENGINEERING REPRESENTATIVE AND THE CONSTRUCTION INSPECTOR, THE TRAFFIC CONTROL DEVICES DO NOT CONFORM TO ESTABLISHED STANDARDS OR ARE INCORRECTLY PLACED OR INADEQUATE TO PROTECT THE GENERAL PUBLIC, THE CONSTRUCTION INSPECTOR SHALL HAVE THE OPTION TO STOP THE CONSTRUCTION OPERATIONS AT NO EXPENSE TO THE COUNTY UNTIL SUCH TIME AS THE CONDITIONS ARE CORRECTED BY THE CONTRACTOR.

2. PRIOR TO MOVING ANY TRAFFIC SIGNS OR TRAFFIC SIGNALS, THE CONTRACTOR SHALL CONTACT THE COUNTY'S TRAFFIC OPERATIONS SECTION. PRIOR TO COMPLETION OF THE CONTRACT AND REMOVAL OF THE BARRICADES, THE CONTRACTOR SHALL AGAIN CONTACT THE TRAFFIC OPERATIONS SECTION. THE BARRICADE SHALL NOT BE REMOVED UNTIL ALL APPLICABLE PERMANENT TRAFFIC SIGNS AND SIGNALS ARE IN PLACE.

3. IT IS THE CONTRACTOR'S RESPONSIBILITY TO OBTAIN AND MAINTAIN TEMPORARY STOP SIGNS AND ALL OTHER TRAFFIC CONTROL DEVICES REQUIRED TO PROTECT THE GENERAL PUBLIC. IF THE COUNTY HAS REMOVED PERMANENT STOP SIGNS, THE CONTRACTOR SHALL REQUEST THAT TEMPORARY SIGNS BE FURNISHED TO THE CONSTRUCTION SITE SO THAT THEY CAN BE REINSTALLED BY HIM. ALL PERMANENT SIGNS OR TRAFFIC CONTROL DEVICES MISSING OR DAMAGED UPON COMPLETION OF CONSTRUCTION SHALL BE REPLACED AT THE CONTRACTOR'S EXPENSE.

4. THE CONTRACTOR MUST CONTACT THE COUNTY'S TRAFFIC ENGINEER OR HIS REPERESENTATIVE 72 HOURS IN ADVANCE (NOT INCLUDING WEEKENDS OR HOLIDAYS) OF ANY MINOR STREET CLOSURE. THIS MUCH TIME IS NECESSARY TO INSTALL ADVISORY SIGNS AND GIVE THE MOTORISTS A MINIMUM OF THREE DAYS NOTICE OF THE STREET CLOSURE. THE TRAFFIC ENGINEERING OFFICE WILL MAKE THE NECESSARY ARRANGEMENTS AND NOTIFY ALL EMERGENCY SERVICES AND AGENCIES.

5. AS WORK PROGRESSES, LOCATION OF TEMPORARY TRAFFIC CONTROL DEVICES WILL BE ADJUSTED AND MODIFIED AS NECESSARY BY THE CONTRACTOR WITH THE APPROVAL OF THE TRAFFIC ENGINEER OR HIS DESIGNATED REPRESENTATIVE.

6. IF THE NEED ARISES, ADDITIONAL TEMPORARY TRAFFIC CONTROL DEVICES, SPECIAL DIRECTIONAL DEVICES AND/OR BUSINESS NAME SIGNS MAY BE ORDERED BY THE TRAFFIC ENGINEER OR HIS DESIGNATED REPRESENTATIVE.

7. TEMPORARY TRAFFIC CONTROL DEVICES SHALL CONFORM TO THE TXDOT STANDARDS "WZ (BTS-1)-03 & WZ (BTS-2)-03", AND TO THE TEXAS MUTCD.

8. THE CONTRACTOR MUST MAINTAIN ALL STREETS OPEN TO THROUGH TRAFFIC BY REPAIRING TRENCHES, POTHOLES, LEVELING UP WITH ASPHALT, ETC AT NO DIRECT PAYMENT. THESE COSTS SHALL BE SUBSIDIARY TO OTHER ITEMS.

9. THE CONTRACTOR SHALL BE RESPONSIBLE FOR PROVIDING SUITABLE ACCESS ACCOMODATIONS FOR SCHOOL CHILDREN AND PEDESTRIANS.

10. THE CONTRACTOR SHALL PROVIDE ACCESS FOR DELIVERY OF MAIL BY THE US POSTAL SERVICE.

11. THE CONTRACTOR SHALL PROVIDE ACCESSES TO RESIDENCES AND ALL BUSINESSES AT ALL TIMES WITHIN ALL PHASES OF CONSTRUCTION.

12. WHEN CONSTRUCTION WORK NECESSITATES THE UTILIZATION OF VEHICLE PATHS OTHER THAN THE LANES NORMALLY USED, TRAFFIC CONTROL MARKINGS NO LONGER APPLICABLE SHALL BE REMOVED AND APPROVED TEMPORARY PAVEMENT MARKINGS AND SIGNS SHALL BE INSTALLED IN ACCORDANCE WITH PART VI-C OF THE TEXAS MUTCD.

13. ALL TEMPORARY TRAFFIC CONTROL DEVICES, ETC SHALL BE PROVIDED BY THE CONTRACTOR WITHOUT DIRECT PAYMENT UNLESS OTHERWISE NOTED OR STATED.

14. THE CONSTRUCTION INSPECTOR SHALL MONITOR THE CONTRACTOR'S TRAFFIC CONTROL DEVICES AND WILL BE RESPONSIBLE TO FURNISH ALL RESIDENTS AND BUSINESSES WITH PROGRESS ADVISORIES ON ALL PHASES DURING THE CONSTRUCTION.

15. THE CONTRACTOR SHALL PROVIDE APPROPRIATE SAFE ACCESSES AND BARRICADES AT ALL THE TIMES TO PROTECT THE PUBLIC. THE SITE MUST BE LEFT IN A SECURE SAFE CONDITION AT NIGHT. THIS INCLUDES SUBSTANTIAL BARRICADES AROUND ALL TRENCHES, OPEN EXCAVATIONS, EQUIPMENT ETC. IT IS THE CONTRACTOR'S RESPONSIBILITY TO TAKE NECESSARY PRECAUTIONS TO PROTECT THE PUBLIC THROUGHOUT THE DURATION OF THE PROJECT.

16. ANY QUESTIONS REGARDING THE PHASING OR STAGING WILL BE STRICTLY HANDLED BY THE DEPARTMENT OF PUBLIC WORKS WHICH HAS COMPLETE AUTHORITY TO MAKE FINAL DECISIONS ON ANY CHANGES OR MODIFICATIONS. THE CONTRACTOR MUST CONTACT THE COUNTY'S TRAFFIC ENGINEER (335-6700) 72 HOURS PRIOR TO (EXCLUDING WEEKENDS AND HOLIDAYS) ANY STREET CLOSURE, WHO WILL MAKE THE NECESSARY ARRANGEMENTS. THE BARRICADES AND WARNING SIGNS SHALL BE LOCATED SO AS TO AFFORD THE MAXIMUM PROTECTION TO THE PUBLIC AS WELL AS CONSTRUCTION PERSONNEL AND EQUIPMENT AND TO INSURE AN EXPEDITIOUS FLOW OF TRAFFIC AT ALL TIMES DURING THE CONSTRUCTION.

17. WHEN DROP-OFF ADJACENT TO THE ROADWAY (TEMPORARY) OR OTHERWISE) EXCEEDED TWO INCHES AND IS LESS THAN TWO FEET, THE CONTRACTOR SHALL PROVIDE DELINEATED DRUMS OR VERTICAL PANELS IN ACCORDANCE WITH THE MOST CURRENT STANDARDS BY BEXAR COUNTY PUBLIC WORKS & TRANSPORTATION. HOWEVER, THIS WILL ONLY BE POSSIBLE IF A MINIMUM BUFFER ZONE OF 4 FT IS AVAILABLE BETWEEN THE EDGE OF TRAVELWAY AND THE WARNING OR CONTROL DEVICE. THE DRUMS OR PANELS SHALL BE PLACED AT 25 FT INTERVALS ALONG THE EDGE OF THE TEMPORARY ROADWAY. THERE WILL BE NO SEPARATE PAY FOR THIS WORK.

18. WHEN DROP-OFF ON THE ROADWAY (TEMPORARY OR OTHERWISE) EXCEEDS 2 FT, THE CONTRACTOR SHALL PLACE A TEMPORARY PROTECTIVE BARRIER ON THE EDGE OF THE TEMPORARY ROADWAY CONFORMING TO THE TEXAS MUTCD. THE COST OF CONCRETE TRAFFIC BARRIERS (PORTABLE) FOR TEMPORARY WIDENING OF ROADWAYS SHALL NOT BE PAID DIRECTLY.

19. PROJECT TO BE CONSTRUCTED AS A SINGLE PHASE. CONTRACTOR RESPONSIBLE FOR MAINTAINING ACCESS TO AREA RESIDENTS AND POSTAL CARRIERS AT ALL TIMES DURING CONSTRUCTION.

NO.	REVISION	BY	DATE

CP&Y

TBPE FIRM REGISTRATION NO: 1741

BEXAR COUNTY
PUBLIC WORKS DIVISION

HIGHLAND OAKS SUBDIVISION–MEMORIAL LANE

TRAFFIC NOTES AND
SPECIAL CONDITIONS

SHEET 1 OF 1

Designed: RTF	STATE	BEXAR COUNTY FILE NUMBER	PLAN SET NO.
Checked: JA	TEXAS		6
Drawn: RTF	COUNTY		OF
Checked: JA	BEXAR		62

C:\PWWorking\vgonzales\d0101294\B0477trfNotes.999
10/29/2009
7:06:12 PM

TCP GENERAL NOTES/ PHASE NARRATIVE

I. GENERAL

A. HANDLE TRAFFIC APPROPRIATELY THROUGH THE PROJECT DURING CONSTRUCTION. PROVIDE FOR THE SAFETY AND COMFORT OF THE TRAVELING PUBLIC AT ALL TIMES. ROADWAY CLOSURES ARE NOT ALLOWED UNLESS OTHERWISE SPECIFIED IN THE PLANS AND/OR AS APPROVED BY THE ENGINEER. PROVIDE ACCESS TO PROPERTIES AND BUSINESSES ADJACENT TO THE RIGHT-OF-WAY AT ALL TIMES DURING THE DURATION OF THE PROJECT. THE ADEQUACY OF THE PROPERTY ACCESS WILL BE DETERMINED BY THE ENGINEER. DO NOT LEAVE EQUIPMENT IN A POSITION THAT WILL ENDANGER THE TRAVELING PUBLIC. MAINTAIN ADEQUATE SAFETY PROVISIONS THROUGHOUT THE PROJECT BY THE INCLUSION OF SIGNING, MARKINGS, SIGNALS, BARRIERS AND BARRICADES. CONFORM TO THE LATEST EDITION OF THE TEXAS MANUAL OF TRAFFIC CONTROL DEVICES (TMUTCD) WHEN USING THESE PROVISIONS.

B. THE USE OF THE RIGHT-OF-WAY IS NOT EXCLUSIVE. COOPERATE WITH THE STATE, THE VARIOUS UTILITY COMPANIES AND THEIR CONTRACTORS, AS REQUIRED TO ALLOW ADJUSTMENTS TO BE MADE BY OTHERS. IF BY VIRTUE OF THE ADJUSTMENT OF THESE UTILITIES THE CONTRACTOR IS DELAYED, AN EXTENSION OF THE WORKING TIME MAY BE GRANTED; IF IN THE OPINION OF THE ENGINEER IT IS WARRANTED.

C. ALL DETOURS, TRAFFIC MOVEMENTS, ETC., ARE DIRECTLY RELATED TO THE SEQUENCE OF WORK; THEREFORE, PROCEED WITH CONSTRUCTION OPERATIONS IN CONFORMITY WITH THE DETAILS SHOWN ON THE PLANS AND AS REQUIRED BY THIS NARRATIVE.

D. PROPOSE AND/OR RECOMMEND ANY MODIFICATIONS TO THE SEQUENCE OF WORK FOR CONSIDERATION TO THE ENGINEER IN WRITING. INCLUDE ANY CHANGES TO THE VARIOUS PAY ITEMS, IMPACT TO TRAFFIC, AND THE EFFECT OF THE OVERALL PROJECT IN TIME AND COST, ETC. WITH ANY MAJOR RECOMMENDED MODIFICATIONS. WRITTEN APPROVAL FROM THE ENGINEER IS REQUIRED PRIOR TO PROCEEDING WITH ANY CONSTRUCTION OPERATION BASED ON A REVISED PHASE/SEQUENCE OF WORK.

E. OFF-DUTY PEACE OFFICERS MAY BE HIRED TO SUPPLEMENT THE WORK FORCE TO CONTROL TRAFFIC AT INTERSECTIONS DURING THE DETOURING OF TRAFFIC, CLOSURE OF ROADWAYS AND/OR INTERSECTIONS, AND ANY OTHER CRITICAL PHASES OF TRAFFIC HANDLING AS DETERMINED BY THE ENGINEER. PAYMENT BASED ON A CONTRACTOR'S FORCE ACCOUNT AS OUTLINED IN THE SPECIAL PROVISION TO ITEM 9.

F. THE ENGINEER MAY DIRECT THE CONTRACTOR TO VARY THE NUMBER AND LOCATION OF SIGNS AND BARRICADES FROM THAT INDICATED ON THE PLANS.

G. COOPERATE FULLY WITH THE VARIOUS UTILITY COMPANIES.

H. "WEEKEND" HOURS ARE DEFINED AS THE HOURS BETWEEN FRIDAY 10:00 PM TO MONDAY 5:30 AM.

I. PROVIDE ADEQUATE DRAINAGE DURING CONSTRUCTION.

J. PLACE CONSTRUCTION EXITS AS NEEDED OR AS DIRECTED BY THE ENGINEER.

II. SEQUENCE OF WORK

THE SEQUENCE OF WORK WILL BE AS FOLLOWS UNLESS OTHERWISE DIRECTED/APPROVED BY THE COSA INSPECTOR.

MEMORIAL LANE WILL BE CONSTRUCTED IN TWO PHASES.

A. PHASE 1-ROADWAY CONSTRUCTION (FULL WIDTH CONSTRUCTION)

PLACE ADVANCED WARNING SIGNS AS SHOWN IN THE TXDOT BC STANDARDS. PRIOR TO THE BEGINNING OF THIS PHASE, INSTALL TRAFFIC CONTROL DEVICES AS SHOWN ON TXDOT STANDARD TCP (2-2)-03 AND SW3P MEASURES AS SHOWN IN THE PLANS.

CONSTRUCT FULL WIDTH PAVEMENT. CONSTRUCT SIDE DITCHES AS SHOWN IN PLANS.OPEN BOTH LANES TO TRAFFIC DURING NON-WORKING HOURS. AT THE END OF EACH WORKDAY, PLACE A 3:1 SIDE SLOPE AT THE EDGE OF EXCAVATION ADJACENT TO THE TRAVELED ROADWAY, UNTIL THE BASE IS IN PLACE OR APPLY STEEL PLATES OVER THE CONSTRUCTION AREA.

WHEN STEEL PLATES ARE USED TO COVER THE ROADWAY, AN ASPHALTIC MATERIAL IS REQUIRED TO PROVIDE A SMOOTH TRANSITION FROM THE ROADWAY TO THE PLATE.

Reginald Fountain, P.E.
10/30/09

STATE OF TEXAS
REGINALD FOUNTAIN
97328
LICENSED
PROFESSIONAL ENGINEER

NO.	REVISION	BY	DATE

CP&Y

TBPE FIRM REGISTRATION NO: 1741

BEXAR COUNTY
PUBLIC WORKS DIVISION

HIGHLAND OAKS SUBDIVISION–MEMORIAL LANE

TCP GENERAL NOTES/
PHASE NARRATIVE

SHEET 1 OF 1

Designed: RTF	STATE	BEXAR COUNTY FILE NUMBER	PLAN SET NO.
Checked: JA	TEXAS		7
Drawn: RTF	COUNTY		OF
Checked: JA	BEXAR		62

C:\PWWorking\rfountain\d0101294\80477TCP_narrative.999
10/29/2009
1:49:32 PM

DISCLAIMER: The use of this standard is governed by the "Texas Engineering Practice Act". No warranty of any kind is made by TxDOT for any purpose whatsoever. TxDOT assumes no responsibility for the conversion of this standard to other formats or for incorrect results or damages resulting from its use.

Barricade and Construction (BC) Standard Sheets General Notes:

1. The Barricade and Construction Standard Sheets (BC sheets) are intended to show typical examples for placement of temporary traffic control devices, construction pavement markings, and typical work zone signs. The information contained in these sheets meet or exceed the requirements shown in the "Texas Manual on Uniform Traffic Control Devices" (TMUTCD).
2. The development and design of the Traffic Control Plan (TCP) is the responsibility of the Engineer.
3. The Contractor may propose changes to the TCP that are signed and sealed by a licensed professional engineer for approval. The Engineer may develop, sign and seal Contractor proposed changes.
4. The Contractor is responsible for installing and maintaining the traffic control devices as shown in the plans. The Contractor may not move or change the approximate location of any device without the approval of the Engineer.
5. Geometric design of lane shifts and detours should, when possible, meet the applicable design criteria contained in manuals such as the American Association of State Highway and Transportation Officials (AASHTO), "A Policy on Geometric Design of Highways and Streets", the TxDOT "Roadway Design Manual" or engineering judgment.
6. When projects abut, the Engineer(s) may omit the END ROAD WORK, TRAFFIC FINES DOUBLE, and other advance warning signs if the signing would be redundant and the work areas appear continuous to the motorists. If the adjacent project is completed first, the Contractor shall erect the necessary warning signs as shown on these sheets, the TCP sheets or as directed by the Engineer. The BEGIN ROAD WORK NEXT X MILES sign shall be revised to show appropriate work zone distance.
7. The Engineer may require duplicate warning signs on the median side of divided highways where median width will permit and traffic volumes justify the signing.
8. All signs shall be constructed in accordance with the details found in the "Standard Highway Sign Designs for Texas," latest edition. Sign details not shown in this manual shall be shown in the plans or the Engineer shall provide a detail to the Contractor before the sign is manufactured.
9. The temporary traffic control devices shown in the illustrations of the BC sheets are examples. As necessary, the Engineer will determine the most appropriate traffic control devices to be used.
10. As shown on BC(2), the OBEY WARNING SIGNS STATE LAW sign and the WORK ZONE TRAFFIC FINES DOUBLE sign with plaque shall be erected in advance of the CSJ limits. The BEGIN ROAD WORK NEXT X MILES, CONTRACTOR and END ROAD WORK signs shall be erected at or near the CSJ limits.
11. Except for devices required by Note 10, traffic control devices should be in place only while work is actually in progress or a definite need exists.
12. The Engineer has the final decision on the location of all traffic control devices.
13. Inactive equipment and work vehicles, including workers' private vehicles must be parked away from travel lanes. They should be as close to the right-of-way line as possible, or located behind a barrier or guardrail, or as approved by the Engineer.

Worker Safety Apparel Notes:

1. Workers on foot who are exposed to traffic or to construction equipment within the right-of-way shall wear high-visibility safety apparel meeting the requirements of ISEA "American National Standard for High-Visibility Apparel" labeled as ANSI 107-2004 standard performance for Class 2 or 3 risk exposure. Class 3 garments should be considered for high traffic volume work areas or night time work.

Only pre-qualified products shall be used. The "Compliant Work Zone Traffic Control Devices List" (CWZTCD) describes prequalified products and their sources and may be found on-line at the web address given below or by contacting:

Texas Department of Transportation
Traffic Operations Division - TE
Phone (512) 416-3134

WEB ADDRESSES FOR REFERENCED DOCUMENTS

Compliant Work Zone Traffic Control Devices List (CWZTCD)
http://www.txdot.gov/publications/traffic.htm

Texas Manual on Uniform Traffic Control Devices (TMUTCD)
http://www.txdot.gov/publications/traffic.htm

Standard Highway Sign Designs for Texas (SHSD)
http://www.txdot.gov/publications/traffic.htm

Traffic Engineering Standard Sheets
http://www.txdot.gov/business/disclaim.htm

Material Producer List
http://www.txdot.gov/business/producer*list.htm

Departmental Material Specifications (DMS)
http://www.txdot.gov/services/construction/material*specifications/

Roadway Design Manual
http://www.txdot.gov/services/general*services/manuals.htm

Texas Department of Transportation
Traffic Operations Division

BARRICADE AND CONSTRUCTION
GENERAL NOTES
AND REQUIREMENTS

1 of 12 BC(1)-07

©TxDOT 11-4-02

DN: TXDOT	CK: TXDOT	DW: TXDOT	CK: TXDOT
COUNT	SECT	JOB	HIGHWAY
DIST	COUNTY		SHEET NO.

REVISIONS
4-03
9-07

DATE:
FILE:

DISCLAIMER: The use of this standard is governed by the "Texas Engineering Practice Act". No warranty of any kind is made by TxDOT for any purpose whatsoever. TxDOT assumes no responsibility for the conversion of this standard to other formats or for incorrect results or damages resulting from its use.

TYPICAL LOCATION OF CROSSROAD SIGNS

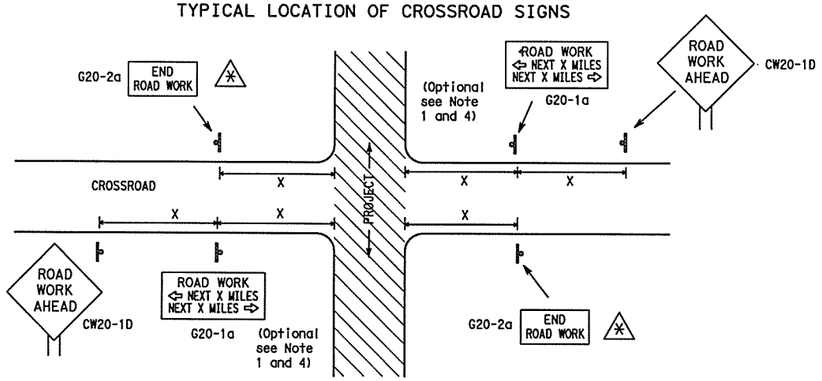

✱ May be mounted on back of CW20-1D sign with approval of engineer. (See note 2 below)

1. The typical minimum signing on a crossroad approach should be a CW20-1D ROAD WORK AHEAD sign and a G20-2a END ROAD WORK sign, unless noted otherwise in plans.
2. The Engineer may use the reduced size 36" x 36" ROAD WORK AHEAD (CW20-1D) sign mounted back to back with the reduced size 36" x 18" END ROAD WORK (G20-2a) sign on low volume crossroads (see Note 4 under "Typical Construction Warning Sign Size and Spacing"). See the "Standard Highway Sign Designs for Texas" manual for sign details. The Engineer may omit the advance warning signs on low volume crossroads. The Engineer will determine whether a road is low volume. This information shall be shown in the plans.
3. Based on existing field conditions, the Engineer/Inspector may require additional signs such as FLAGGER AHEAD, LOOSE GRAVEL, or other appropriate signs. When additional signs are required, these signs will be considered part of the minimum requirements. The Engineer/Inspector will determine the proper location and spacing of any sign not shown on the BC sheets, Traffic Control Plan sheets or the Work Zone Standard Sheets.
4. The G20-1a sign shall be required at high volume crossroads to advise motorists of the length of construction in either direction from the intersection. The Engineer will determine whether a roadway is considered high volume.
5. Additional traffic control devices may be shown elsewhere in the plans for higher volume crossroads.
6. When work occurs in the intersection area, appropriate traffic control devices, as shown elsewhere in the plans or as determined by the Engineer/Inspector, shall be in place.

T-INTERSECTION

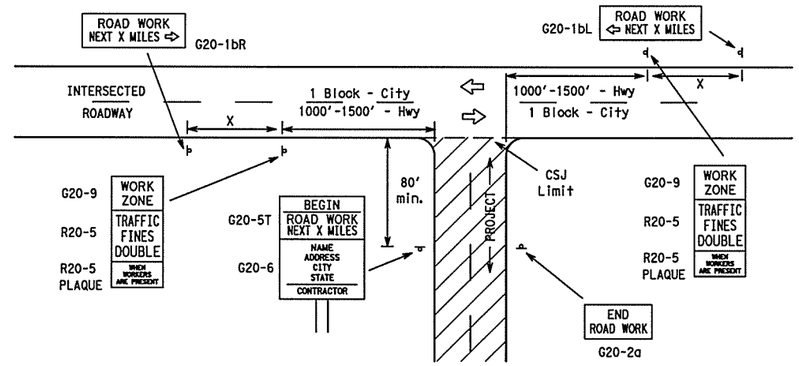

CSJ LIMITS AT T-INTERSECTION

1. The Engineer will determine the types and location of any additional traffic control devices, such as a flagger and accompanying signs, or other signs, that should be used when work is being performed at or near an intersection.
2. If construction closes the road at a T-intersection the Contractor shall place the G20-6 "Contractor Name" sign behind the Type III Barricades for the road closure (see BC(10) also). The G20-1bL and G20-1bR signs shall be replaced by the detour signing called for in the plans.

TYPICAL CONSTRUCTION WARNING SIGN SIZE AND SPACING [1,5,6]

SIZE

Sign Number or Series	Conventional Road	Expressway/ Freeway
CW20 [4], CW21, CW22, CW23, CW25	48" x 48"	48" x 48"
CW1, CW2, CW7, CW8, CW9, CW11, CW14	36" x 36"	48" x 48"
CW3, CW4, CW5, CW6, CW8-3, CW10, CW12	48" x 48"	48" x 48"

SPACING

Posted Speed	Sign Spacing "X" Δ
MPH	Feet (Apprx.)
30	120
35	160
40	240
45	320
50	400
55	500 [2]
60	600 [2]
65	700 [2]
70	800 [2]
75	900 [2]
80	1000 [2]
✱	✱ [3]

✱ For typical sign spacings on divided highways, expressways and freeways, see Part 6 of the "Texas Manual on Uniform Traffic Control Devices" (TMUTCD) typical application diagrams or TCP Standard Sheets.

Δ Minimum distance from work area to first Advance Warning sign nearest the work area and/or distance between each additional sign.

General Notes:

1. Special or larger size signs may be used as necessary.
2. Distance between signs should be increased as required to have 1500 feet advance warning.
3. Distance between signs should be increased as required to have ½ mile or more advance warning.
4. 36" x 36" ROAD WORK AHEAD (CW20-1D) signs may be used on low volume crossroads at the discretion of the Engineer. See Note 2 under "Typical Location of Crossroad Signs".
5. Only diamond shaped warning sign sizes are indicated.
6. See sign size listing in "TMUTCD", Sign Appendix or the "Standard Highway Sign Designs for Texas" manual for complete list of available sign design sizes.

WORK AREAS IN MULTIPLE LOCATIONS WITHIN CSJ LIMITS

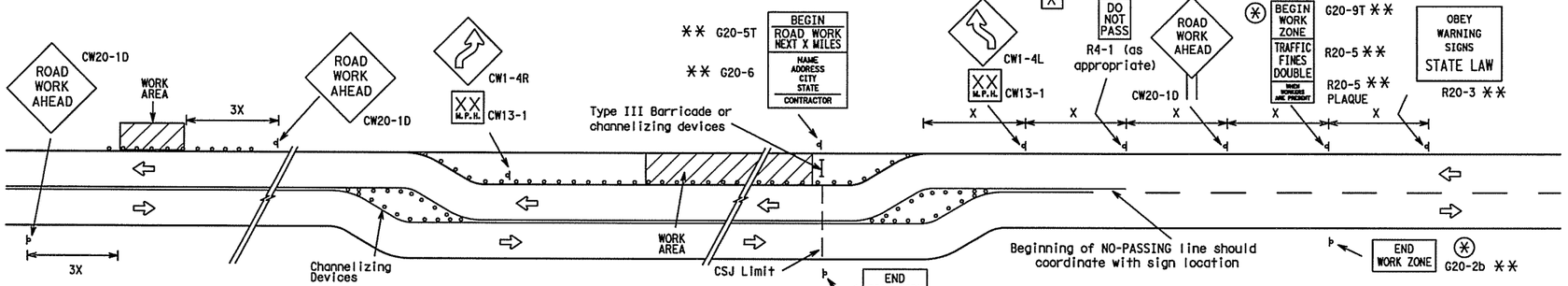

When extended distances occur between minimal work areas, the Engineer/Inspector should ensure additional Road Work Ahead (CW20-1D) signs are placed in advance of these work areas to remind drivers they are still within the project limits. See the applicable TCP sheets for exact location and spacing of signs and channelizing devices.

SAMPLE LAYOUT OF SIGNING FOR WORK BEGINNING AT THE CSJ LIMITS

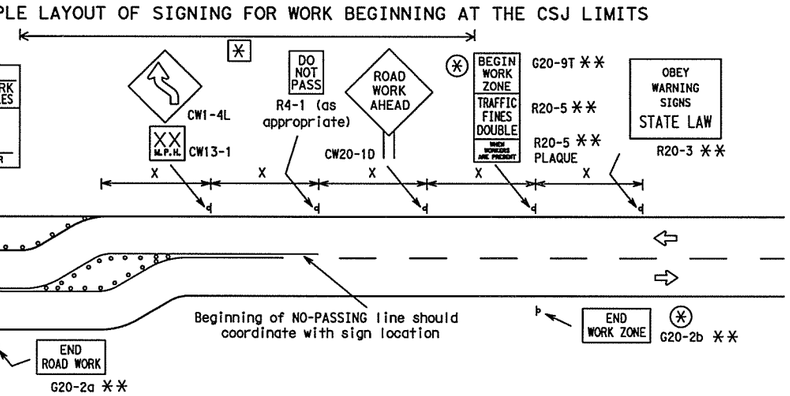

SAMPLE LAYOUT OF SIGNING FOR WORK BEGINNING DOWNSTREAM OF THE CSJ LIMITS

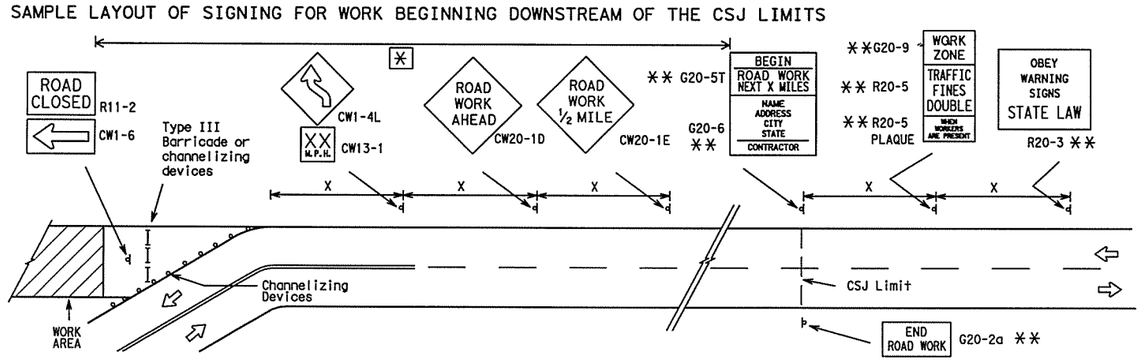

NOTES

The Contractor shall determine the appropriate distance to be placed on the G20-1 series signs and G20-5T sign for each specific project. This distance shall replace the "X" and shall be rounded to the nearest whole mile with the approval of the Engineer. No decimals shall be used.

⊛ The G20-9T and G20-2b shall be used when advance signs are required outside the CSJ Limits. They inform the motorist of entering or leaving a work zone where traffic fines may double if workers are present.

✱✱ Required CSJ Limit signing. See Note 10 on BC(1).

✱ Area for placement of "ROAD WORK AHEAD" sign and other signs or devices as called for on the Traffic Control Plan.

LEGEND

- Sign
- Channelizing Devices
- Type III Barricade
- X See Typical Construction Warning Sign Size and Spacing chart or the TMUTCD for sign spacing requirements.

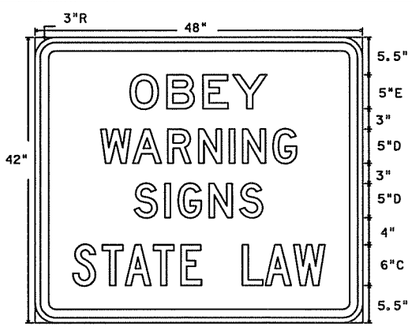

R20-3
Legend/Border - Black
Background - White

Texas Department of Transportation
Traffic Operations Division

BARRICADE AND CONSTRUCTION PROJECT LIMIT STANDARD

2 of 12

BC(2)-07

© TxDOT 11-4-02

9-07 REVISIONS	DN: TXDOT	CK: TXDOT	DW: TXDOT	CK: TXDOT
	CONT	SECT	JOB	HIGHWAY
	DIST		COUNTY	SHEET NO. 9

DATE:
FILE:

DISCLAIMER: The use of this standard is governed by the "Texas Engineering Practice Act". No warranty of any kind is made by TxDOT for any purpose whatsoever. TxDOT assumes no responsibility for the conversion of this standard to other formats or for incorrect results or damages resulting from its use.

TYPICAL APPLICATION OF WORK ZONE SPEED LIMIT SIGNS

Work zone speed limits shall be regulatory, established in accordance with the "Procedures for Establishing Speed Zones," and approved by the Texas Transportation Commission, or by City Ordinance when within Incorporated City Limits.

Reduced speeds should only be posted in the vicinity of work activity and not throughout the entire project.

Regulatory work zone speed signs (R2-1) shall be removed or covered during periods when they are not needed.

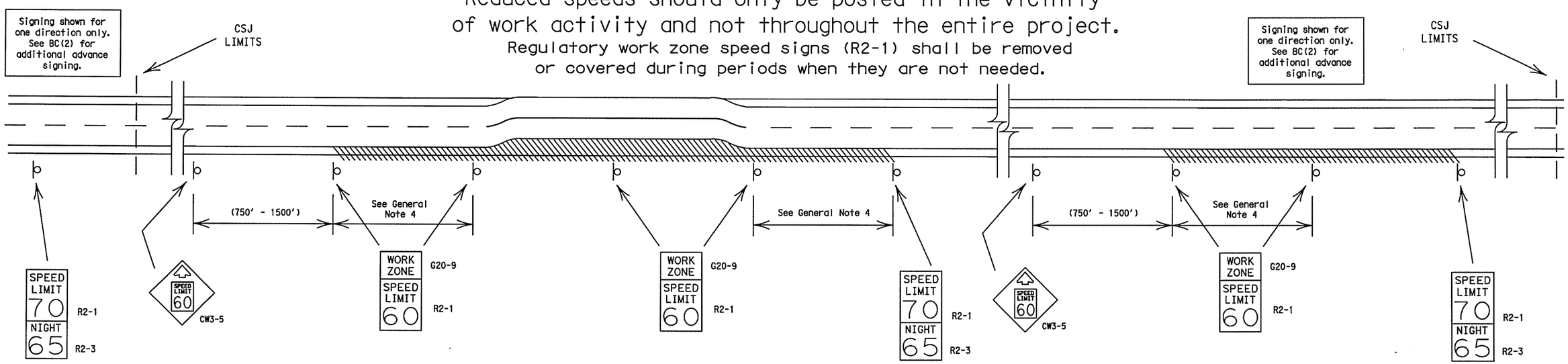

GUIDANCE FOR USE:

LONG/INTERMEDIATE TERM WORK ZONE SPEED LIMITS

This type of work zone speed limit should be included on the design of the traffic control plans when restricted geometrics with a lower design speed are present in the work zone and modification of the geometrics to a higher design speed is not feasible.

Long/Intermediate Term Work Zone Speed Limit signs, when approved as described above, should be posted and visible to the motorist when work activity is present. Work activity may also be defined as a change in the roadway that requires a reduced speed for motorists to safely negotiate the work area, including:

a) rough road or damaged pavement surface
b) substantial alteration of roadway geometrics (diversions)
c) construction detours
d) grade
e) width
f) other conditions readily apparent to the driver

As long as any of these conditions exist, the work zone speed limit signs should remain in place.

SHORT TERM WORK ZONE SPEED LIMITS

This type of work zone speed limit should be included on the design of the traffic control plans when workers or equipment are not behind concrete barrier, when work activity is within 15 feet of pavement edge or actually on the pavement.

Short Term Work Zone Speed Limit signs should be posted and visible to the motorists only when work activity is present. When work activity is not present, signs shall be removed or covered.
(See Removing or Covering on BC(4)).

GENERAL NOTES:

1. Regulatory work zone speed limits should be used only for sections of construction projects where speed control is of major importance.
2. Regulatory work zone speed limit signs shall be placed on supports at a 7 foot minimum mounting height.
3. Speed zone signs are illustrated for one direction of travel and are normally posted for each direction of travel.
4. Frequency of work zone speed limit signs should be:
   40 mph and greater 0.2 to 2 miles
   35 mph and less 0.2 to 1 mile
5. Regulatory speed limit signs shall have black legend and border on a white reflective background (See "Reflective Sheeting" on BC(4)).
6. Fabrication, errection and maintenance of the CW3-5 sign, G20-9 plaque and the R2-1 and R2-3 signs shall not be paid for directly, but shall be considered subsidiary to Item 502.
7. Turning signs from view, laying signs over or down will not be allowed, unless otherwise noted.
8. Techniques that may help reduce traffic speeds include but are not limited to:
   A. Law enforcement.
   B. Flagger stationed next to sign.
   C. Portable changeable message sign (PCMS).
   D. Low-power (drone) radar transmitter.
   E. Speed monitor trailers or signs.
9. Speeds shown on details above are for illustration only.
   Work Zone Speed Limits should only be posted as approved for each project.

Texas Department of Transportation
Traffic Operations Division

BARRICADE AND CONSTRUCTION WORK ZONE SPEED LIMIT STANDARD

3 of 12 BC(3)-07

© TxDOT 11-4-02

DN: TXDOT	CK: TXDOT	DW: TXDOT	CK: TXDOT
CONT	SECT	JOB	HIGHWAY
DIST	COUNTY		SHEET NO.

9-07 REVISIONS

DATE:
FILE:

DISCLAIMER: The use of this standard is governed by the "Texas Engineering Practice Act". No warranty of any kind is made by TxDOT for any purpose whatsoever. TxDOT assumes no responsibility for the conversion of this standard to other formats or for incorrect results or damages resulting from its use.

TYPICAL MINIMUM CLEARANCES FOR LONG TERM AND INTERMEDIATE TERM SIGNS

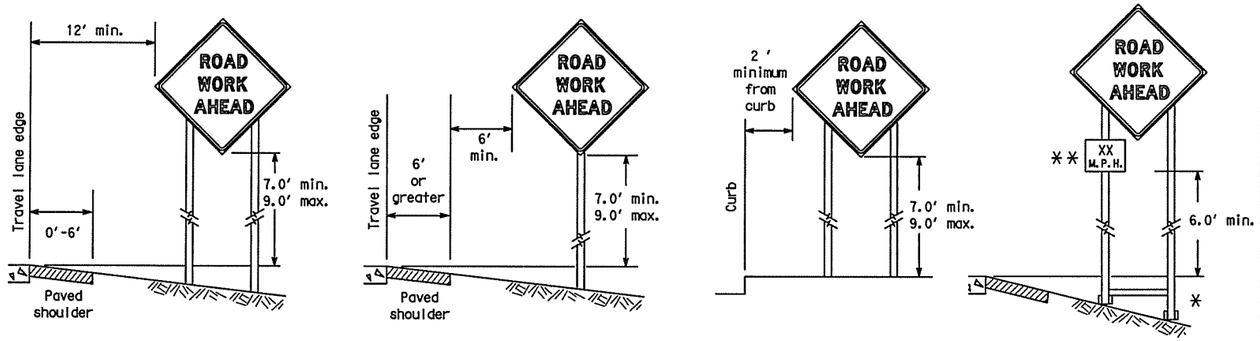

* When placing skid supports on unlevel ground, the leg post lengths must be adjusted so the sign appears straight and plumb. Objects shall NOT be placed under skids as a means of leveling.

** When plaques are placed on dual-leg supports, they should be attached to the upright nearest the travel lane. Supplemental plaques (advisory or distance) should not cover the surface of the parent sign.

ATTACHMENT FOR SIGN SUPPORTS

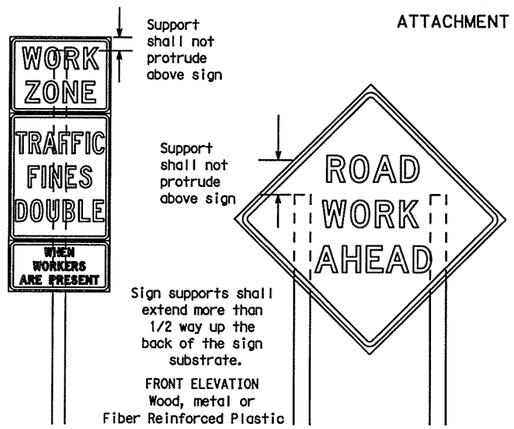

Splicing embedded perforated square metal tubing in order to extend post height will only be allowed when the splice is made using four bolts, two above and two below the spice point. Splice must be located entirely behind the sign substrate, not near the base of the support. Splice insert lengths should be at least 5 times nominal post size, centered on the splice and of at least the same guage material.

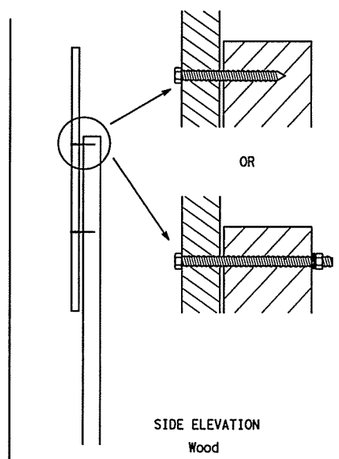

Attachment to wooden supports will be by bolts and nuts or screws. Use TxDOT's or manufacturer's recommended procedures for attaching sign substrates to other types of sign supports

Nails will NOT be allowed.

Each sign shall be attached directly to the sign support. Multiple signs shall not be joined or spliced by any means. Wood supports shall not be extended or repaired by splicing or other means.

STOP/SLOW PADDLES

1. STOP/SLOW paddles are the primary method to control traffic by flaggers. The STOP/SLOW paddle size should be 24" x 24" as detailed below.
2. When used at night, the STOP/SLOW paddle shall be retroreflectorized.
3. STOP/SLOW paddles may be attached to a staff with a minimum length of 6' to the bottom of the sign.
4. Any lights incorporated into the STOP or SLOW paddle faces shall only be as specifically described in Section 6E.03 Hand Signaling Devices in the TMUTCD.

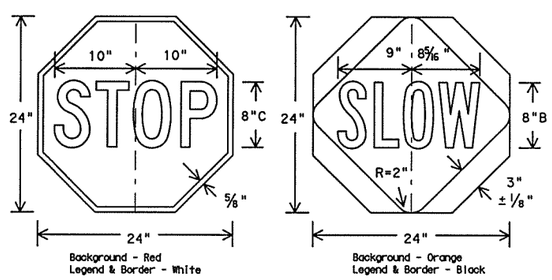

CONTRACTOR REQUIREMENTS FOR MAINTAINING PERMANENT SIGNS WITHIN THE PROJECT LIMITS

1. Permanent signs are used to give notice of traffic laws or regulations, call attention to conditions that are potentially hazardous to traffic operations, show route designations, destinations, directions, distances, services, points of interest, and other geographical, recreational, or cultural information. Drivers proceeding through a work zone need the same, if not better route guidance as normally installed on a roadway without construction.
2. When permanent regulatory or warning signs conflict with work zone conditions, remove or cover the permanent signs until the permanent sign message matches the roadway condition.
3. When existing permanent signs are moved and relocated due to construction purposes, they shall be visible to motorists at all times.
4. If existing signs are to be relocated on their original supports, they shall be installed on crashworthy bases as shown on the SMD Standard sheets. The signs shall meet the required mounting heights shown on the BC Sheets or the SMD Standards. This work should be paid for under the appropriate pay item for relocating existing signs.
5. If permanent signs are to be removed and relocated using temporary supports, the Contractor shall use crashworthy supports as shown on the BC sheets or the CWZTCD. The signs shall meet the required mounting heights shown on the BC Sheets or the SMD Standards during construction. This work should be paid for under the appropriate pay item for relocating existing signs.
6. Any sign or traffic control device that is struck or damaged by the Contractor or his/her construction equipment shall be replaced as soon as possible by the Contractor to ensure proper guidance for the motorists. This will be subsidiary to Item 502.

GENERAL NOTES FOR WORK ZONE SIGNS

1. Contractor shall install and maintain signs in a straight and plumb condition and/or as directed by the Engineer.
2. Wooden sign posts shall be painted white.
3. Barricades shall NOT be used as sign supports.
4. Nails shall NOT be used to attach signs to any support.
5. All signs shall be installed in accordance with the plans or as directed by the Engineer. Signs shall be used to regulate, warn, and guide the traveling public safely through the work zone.
6. The Contractor may furnish either the sign design shown in the plans or in the "Standard Highway Sign Designs for Texas" (SHSD). The Engineer/Inspector may require the Contractor to furnish other work zone signs that are shown in the TMUTCD but may have been omitted from the plans. Any variation in the plans shall be documented by written agreement between the Engineer and the Contractor's Responsible Person. All changes must be documented in writing before being implemented. This can include documenting the changes in the Inspector's TxDOT diary and having both the Inspector and Contractor initial and date the agreed upon changes.
7. The Contractor shall furnish sign supports listed in the "Compliant Work Zone Traffic Control Device List" (CWZTCD). The Contractor shall install the sign support in accordance with the manufacturer's recommendations. If there is a question regarding installation procedures, the Contractor shall furnish the Engineer a copy of the manufacturer's installation recommendations so the Engineer can verify the correct procedures are being followed.
8. The Contractor is responsible for installing signs on approved supports and replacing signs with damaged or cracked substrates and/or damaged or marred reflective sheeting as directed by the Engineer/Inspector.
9. Identification markings may be shown only on the back of the sign substrate. The maximum height of letters and/or company logos used for identification shall be 1 inch.
10. The Contractor shall replace damaged wood posts. New or damaged wood sign posts shall not be spliced.

DURATION OF WORK (as defined by the "Texas Manual on Uniform Traffic Control Devices" Part 6)

1. The types of sign supports, sign mounting height, the size of signs, and the type of sign substrates can vary based on the type of work being performed. The Engineer is responsible for selecting the appropriate size sign for the type of work being performed. The Contractor is responsible for ensuring the sign support, sign mounting height and substrate meets manufacturer's recommendations in regard to crashworthiness and duration of work requirements.
   a. Long-term stationary - work that occupies a location more than 3 days.
   b. Intermediate-term stationary - work that occupies a location more than one daylight period up to 3 days, or nightime work lasting more than one hour.
   c. Short-term stationary - daytime work that occupies a location for more than 1 hour in a single daylight period.
   d. Short, duration - work that occupies a location up to 1 hour.
   e. Mobile - work that moves continuously or intermittently (stopping for up to approximately 15 minutes.)

SIGN MOUNTING HEIGHT

1. The bottom of Long-term/Intermediate-term signs shall be at least 7 feet, but not more than 9 feet, above the paved surface, except as shown for supplemental plaques mounted below other signs.
2. The bottom of Short-term/Short Duration signs shall be a minimum of 1 foot above the pavement surface but no more than 2 feet above the ground.
3. Long-term/Intermediate-term Signs may be used in lieu of Short-term/Short Duration signing.
4. Short-term/Short Duration signs shall be used only during daylight and shall be removed at the end of the workday. or raised to appropriate Long-term/Intermediate sign height.
5. Regulatory signs shall be mounted at least 7 feet, but not more than 9 feet, above the paved surface regardless of work duration.

SIZE OF SIGNS

1. The Engineer may allow the use of smaller size construction warning signs on secondary roads or city streets where speeds are low if the sign size is listed as an option on the "Typical Construction Warning Sign Size and Spacing" chart shown on BC(2).
2. The Contractor shall furnish the sign sizes shown in plans, the BC Sheets, the TCP sheets or as directed by the Engineer.

SIGN SUBSTRATES

1. The Contractor shall ensure the sign substrate is installed in accordance with the manufacturer's recommendations for the type of sign support that is being used. The CWZTCD lists each substrate that can be used on the different types and models of sign supports.
2. "Mesh" type materials are NOT an approved sign substrate, regardless of the tightness of the weave.
3. All wooden individual sign panels fabricated from 2 or more pieces shall have one or more plywood cleat, 1/2" thick by 6" wide, fastened to the back of the sign and extending fully across the sign. The cleat shall be attached to the back of the sign using wood screws that do not penetrate the face of the sign panel. The screws shall be placed on both sides of the splice and spaced at 6" centers. The Engineer may approve other methods of splicing the sign face.

REFLECTIVE SHEETING

1. All signs shall be retroreflective and constructed of sheeting meeting the color and retro-reflectivity requirements of DMS-8300 for rigid signs or DMS-8310 for roll-up signs. The web address for DMS specifications is shown on BC(1).
2. White sheeting, meeting the requirements of DMS-8300 Type C (High Specific Intensity), shall be used for signs with a white background.
3. Orange sheeting, meeting the requirements of DMS-8300 Type E (Fluorescent Prismatic), shall be used for rigid signs with orange backgrounds.

SIGN LETTERS

1. All sign letters and numbers shall be clear, and open rounded type uppercase alphabet letters as approved by the Federal Highway Administration (FHWA) and as published in the "Standard Highway Sign Design for Texas" manual. Signs, letters and numbers shall be of first class workmanship in accordance with Department Standards and Specifications.

REMOVING OR COVERING

1. When sign messages may be confusing or do not apply, the signs shall be removed or completely covered.
2. Long-term stationary or intermediate stationary signs installed on square metal tubing may be turned away from traffic 90 degrees when the sign message is not applicable. This type of sign support meets the crashworthiness standards regardless of the direction of impact. This technique may not be used for signs installed in the median of divided highways or near any intersections where the sign may be seen from approaching traffic.
3. Signs installed on wooden skids shall not be turned at 90 degree angles to the roadway. These signs should be removed or completely covered when not required.
4. When signs are covered, the material used shall be opaque, such as heavy mil black plastic, or other materials which will cover the entire sign face and maintain their opaque properties under automobile headlights at night, without damaging the sign sheeting.
5. Burlap shall NOT be used to cover signs.
6. Duct tape or other adhesive material shall NOT be affixed to a sign face. These materials can damage the retroreflectivity of sheeting.
7. Signs and anchor stubs shall be removed and holes backfilled upon completion of work.

SIGN SUPPORT WEIGHTS

1. Where sign supports require the use of weights to keep from turning over, the use of sandbags with dry, cohesionless sand is recommended.
2. The sandbags will be tied shut to keep the sand from spilling and to maintain a constant weight.
3. Rock, concrete, iron, steel or other solid objects shall not be permitted for use as sign support weights.
4. Sandbags should weigh a minimum of 35 lbs and a maximum of 50 lbs.
5. Sandbags shall be made of a durable material that tears upon vehicular impact.
6. Rubber (such as tire inner tubes) shall NOT be used for sandbags.
7. Rubber ballasts designed for channelizing devices should not be used for ballast on portable sign supports. Sign supports designed and manufactured with rubber bases may be used when shown on the CWZTCD list.
8. Sandbags shall only be placed along or laid over the base supports of the traffic control device and shall not be suspended above ground level or hung with rope, wire, chains or other fasteners. Sandbags shall be placed along the length of the skids to weigh down the sign support.
9. Sandbags shall NOT be placed under the skid and shall not be used to level sign supports placed on slopes.

Texas Department of Transportation
Traffic Operations Division

BARRICADE AND CONSTRUCTION TEMPORARY SIGN NOTES STANDARD

4 of 12 BC(4)-07

©TxDOT 11-4-02	DN: TXDOT	CK: TXDOT	DW: TXDOT	CK: TXDOT	
9-07 REVISIONS	CONT	SECT	JOB	HIGHWAY	
	DIST		COUNTY		SHEET NO.

DATE:
FILE:

DISCLAIMER: The use of this standard is governed by the "Texas Engineering Practice Act". No warranty of any kind is made by TxDOT for any purpose whatsoever. TxDOT assumes no responsibility for the conversion of this standard to other formats or for incorrect results or damages resulting from its use.

SKID MOUNTED WOOD SIGN SUPPORTS

LONG/INTERMEDIATE TERM STATIONARY - PORTABLE SKID MOUNTED SIGN SUPPORTS □

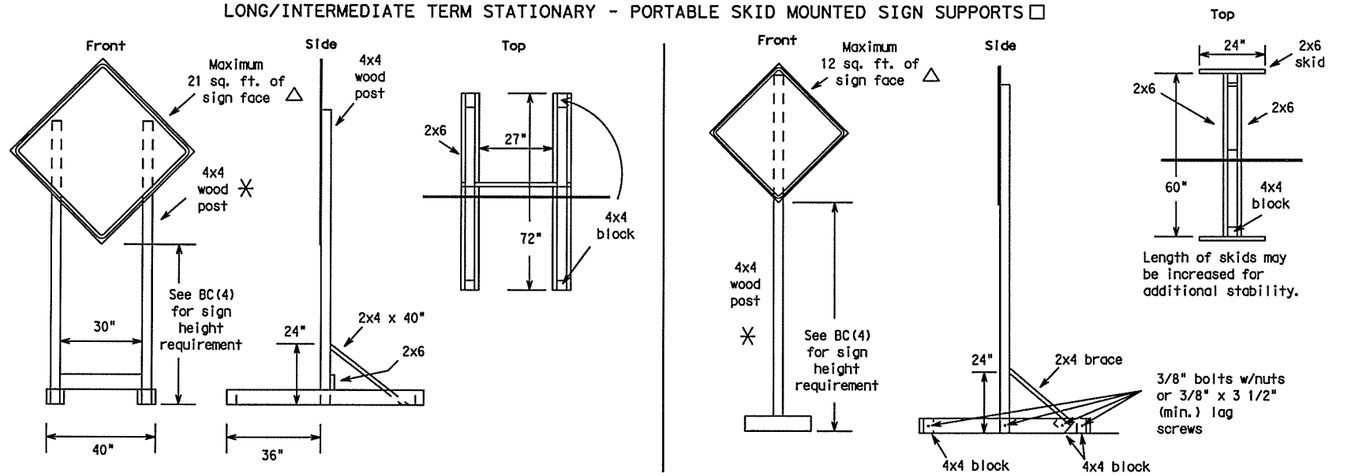

SKID MOUNTED PERFORATED SQUARE STEEL TUBING SIGN SUPPORTS

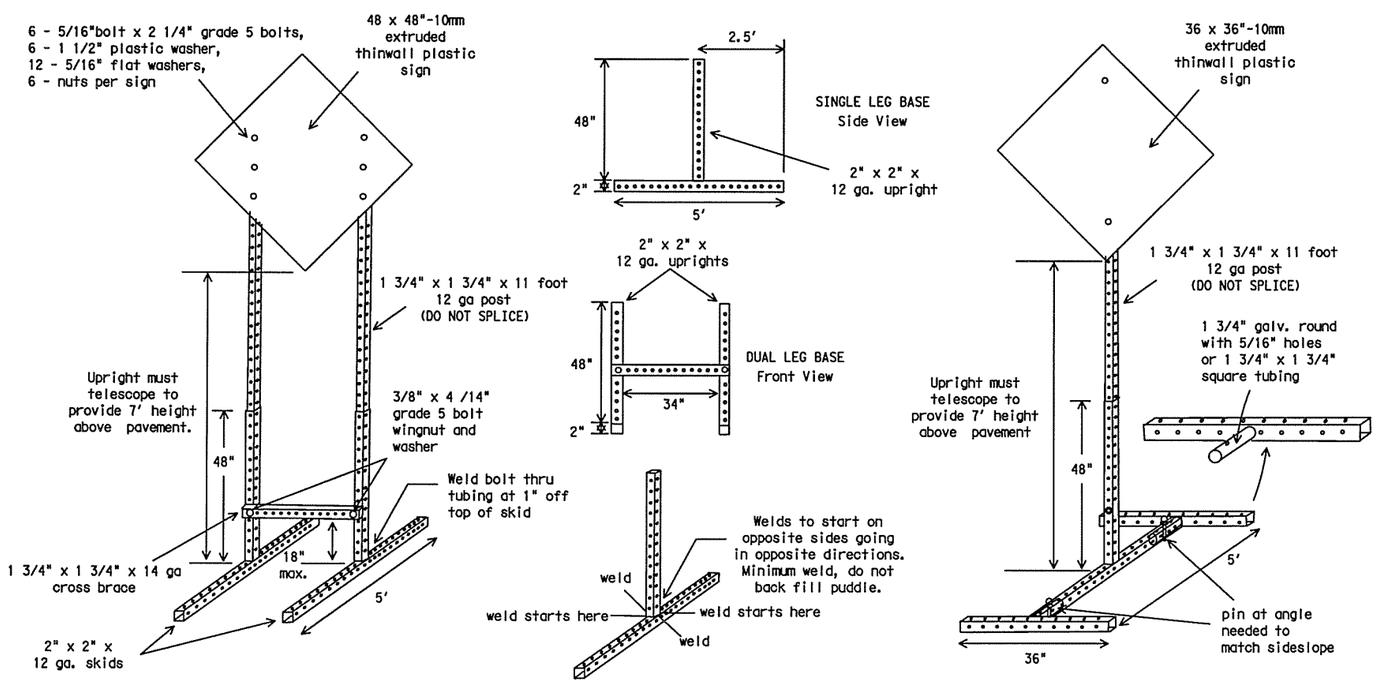

WEDGE ANCHORS

Both steel and plastic Wedge Anchor Systems as shown on the SMD Standard Sheets may be used as temporary sign supports for signs up to 10 square feet of sign face. They may be set in concrete or in sturdy soils if approved by the Engineer. (See web address for "Traffic Engineering Standard Sheets" on BC(1)).

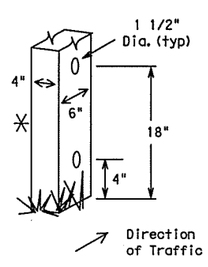

WOOD POST SYSTEM FOR GROUND MOUNTED SIGN SUPPORTS

Nominal Post Size	No. of Posts	Maximum Sq. feet of Sign Face	Minimum Soil Embedment	Drilled Hole(s) Required
4 x 4	1	12	36"	NO
4 x 4	2	21	36"	NO
4 x 6	1	21	36"	YES
4 x 6	2	36	36"	YES

GROUND MOUNTED SIGN SUPPORTS

Refer to the CWZTCD and the manufacturer's installation procedure for each type sign support.
The maximum sign square footage shall adhere to the manufacturer's recommendation.
Two post installations can be used for larger signs.

PERFORATED SQUARE METAL TUBING

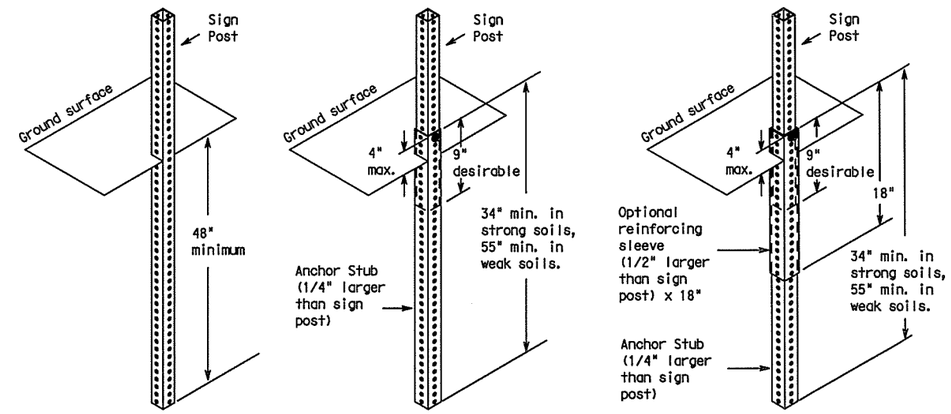

OPTION 1 (Direct Embedment)

OPTION 2 (Anchor Stub)

OPTION 3 (Anchor Stub and Reinforcing Sleeve))

WING CHANNEL

Lap-splice/base bolted anchor

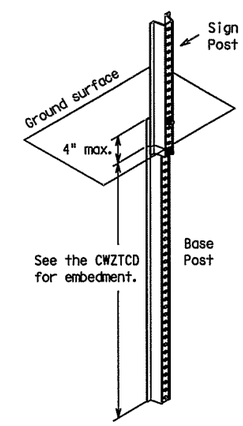

GENERAL NOTES

1. Nails may be used in the assembly of wooden sign supports, but 3/8" bolts with nuts or 3/8" x 3 1/2" lag screws must be used on every joint for final connection.
2. More details of approved Long/Intermediate and Short Term supports can be found on the CWZTCD list. See BC(1) for website location.
3. No more than 2 sign posts shall be placed within a 7 ft. circle, except for specific materials noted on the CWZTCD List.
4. When project is completed, all sign supports and foundations shall be removed from the project site. This will be considered subsidiary to Item 502.

□ See BC(4) for definition of "Work Duration."

✳ Wood sign posts MUST be one piece. Splicing will NOT be allowed. Posts shall be painted white.

△ See the CWZTCD for the type of sign substrate that can be used for each approved sign support.

Texas Department of Transportation
Traffic Operations Division

BARRICADE AND CONSTRUCTION TYPICAL SIGN SUPPORT STANDARD

5 of 12

BC(5)-07

©TxDOT 11-4-02

DN: TXDOT	CK: TXDOT	DW: TXDOT	CK: TXDOT
9-07 REVISIONS	CONT	SECT	JOB	HIGHWAY
	DIST	COUNTY	SHEET NO. 12

DATE:
FILE:

DISCLAIMER: The use of this standard is governed by the "Texas Engineering Practice Act". No warranty of any kind is made by TxDOT for any purpose whatsoever. TxDOT assumes no responsibility for the conversion of this standard to other formats or for incorrect results or damages resulting from its use.

PORTABLE CHANGEABLE MESSAGE SIGNS

1. The Engineer/Inspector shall approve all messages used on portable changeable message signs (PCMS).
2. Messages on PCMS should contain no more than 8 words (about four to eight characters per word), not including simple words such as "TO," "FOR," "AT," etc.
3. Messages should consist of a single phase, or two phases that alternate. Three-phase messages are not allowed. Each phase of the message should convey a single thought, and must be understood by itself.
4. Use the word "EXIT" to refer to an exit ramp on a freeway; i.e., "EXIT CLOSED." Do not use the term "RAMP."
5. Always use the route or interstate designation (IH, US, SH, FM) along with the number when referring to a roadway.
6. When in use the bottom of a stationary PCMS message panel should be a minimum 7 feet above the roadway, where possible.
7. The message term "WEEKEND" should be used only if the work is to start on Saturday morning and end by Sunday evening at midnight. Actual days and hours of work should be displayed on the PCMS if work is to begin on Friday evening and/or continue into Monday morning.
8. The Engineer/Inspector may select one of two options which are available for displaying a two-phase message on a PCMS. Each phase may be displayed for either four seconds each or for three seconds each.
9. Do not "flash" messages or words included in a message. The message should be steady burn or continuous while displayed.
10. Do not present redundant information on a two-phase message; i.e., keeping two lines of the message the same and changing the third line.
11. Do not use the word "Danger" in message.
12. Do not display the message "LANES SHIFT LEFT" or "LANES SHIFT RIGHT" on a PCMS. Drivers do not understand the message.
13. Do not display messages that scroll horizontally or vertically across the face of the sign.
14. The following table lists abbreviated words and two-word phrases that are acceptable for use on a PCMS. Both words in a phrase must be displayed together. Words or phrases not on this list should not be abbreviated.
15. PCMS character height should be at least 18 inches for trailer mounted units. They should be visible from at least 1/2 (.5) mile and the text should be legible from at least 720 feet. Truck mounted units must have a character height of 10 inches and must be legible from at least 400 feet.
16. Each line of text should be centered on the message board rather than left or right justified.
17. If disabled, the PCMS should default to an illegible display that will not alarm motorists and will only be used to alert workers that the PCMS has malfunctioned. A pattern such as a series of horizontal solid bars is appropriate.

Word or Phrase	Abb.	Word or Phrase	Abb.
Access Road	ACCS RD	Major	MAJ
Air Quality	AIR QLTY	Miles	MI
Alternate	ALT	Miles Per Hour	MPH
Avenue	AVE	Minor	MNR
Best Route	BEST RTE	Monday	MON
Boulevard	BLVD	Normal	NORM
Bridge	BRDG	North	N
Cannot	CANT	Northbound	(route) N
Center	CNTR	Parking	PKING
Construction Ahead	CONST AHEAD	Parking Lot	PRK LOT
Detour Route	DETOUR RTE	Road	RD
Do Not	DONT	Right Lane	RGT LN
East	E	Saturday	SAT
Eastbound	(route) E	Service Road	SERV RD
Emergency	EMER	Shoulder	SHLDR
Emergency Vehicle	EMER VEH	Slippery	SLIP
Entrance, Enter	ENT	South	S
Express Lanes	EXP LANE	Southbound	(route) S
Expressway	EXPWY	Speed	SPD
XXXX Feet	XXXX FT	Street	ST
Fog Ahead	FOG AHD	Sunday	SUN
Freeway	FRWY, FWY	Telephone	PHONE
Freeway Blocked	FWY BLKD	Temporary	TEMP
Friday	FRI	Thursday	THURS
Hazardous Driving	HAZ DRIVING	To Downtown	TO DWNTN
Hazardous Material	HAZMAT	Traffic	TRAF
High-Occupancy Vehicle	HOV	Travelers	TRVLRS
Highway	HWY	Tuesday	TUES
Hours	HR	Time Minutes	TIME MIN
Information	INFO	Upper Level	UPPR LVL
It Is	ITS	Vehicle	VEH
Junction	JCT	Warning	WARN
Left	LFT	Wednesday	WED
Left Lane	LFT LN	Weight Limit	WT LIMIT
Lane Closed	LN CLSD	West	W
Lower Level	LOWR LVL	Westbound	(route) W
Maintenance	MAINT	Wet Pavement	WET PVMT
		Will Not	WONT

Roadway designation # IH-number, US-number, SH-number, FM-number

WHEN NOT IN USE, REMOVE THE PCMS FROM THE RIGHT-OF-WAY OR PLACE THE PCMS BEHIND BARRIER OR GUARDRAIL WITH SIGN PANEL TURNED PARALLEL TO TRAFFIC

RECOMMENDED PHASES AND FORMATS FOR PCMS MESSAGES DURING ROADWORK ACTIVITIES

(The Engineer may approve other messages not specifically covered here.)

Phase 1: Condition Lists

Road/Lane/Ramp Closure List

FREEWAY CLOSED X MILE	FRONTAGE ROAD CLOSED
ROAD CLOSED AT SH XXX	SHOULDER CLOSED XXX FT
ROAD CLSD AT FM XXXX	RIGHT LN CLOSED XXX FT
RIGHT X LANES CLOSED	RIGHT X LANES OPEN
CENTER LANE CLOSED	DAYTIME LANE CLOSURES
NIGHT LANE CLOSURES	I-XX SOUTH EXIT CLOSED
VARIOUS LANES CLOSED	EXIT XXX CLOSED X MILE
EXIT CLOSED	RIGHT LN TO BE CLOSED
MALL DRIVEWAY CLOSED	X LANES CLOSED TUE - FRI
XXXXXXXX BLVD CLOSED	

Other Condition List

ROADWORK XXX FT	ROAD REPAIRS XXXX FT
FLAGGER XXXX FT	LANE NARROWS XXXX FT
RIGHT LN NARROWS XXXX FT	TWO-WAY TRAFFIC XX MILE
MERGING TRAFFIC XXXX FT	CONST TRAFFIC XXX FT
LOOSE GRAVEL XXXX FT	UNEVEN LANES XXXX FT
DETOUR X MILE	ROUGH ROAD XXXX FT
ROADWORK PAST SH XXXX	ROADWORK NEXT FRI-SUN
BUMP XXXX FT	US XXX EXIT X MILES
TRAFFIC SIGNAL XXXX FT	LANES SHIFT *

* LANES SHIFT in Phase 1 must be used with STAY IN LANE in Phase 2.

Phase 2: Possible Component Lists

Action to Take/Effect on Travel List

MERGE RIGHT	FORM X LINES RIGHT
DETOUR NEXT X EXITS	USE XXXXX RD EXIT
USE EXIT XXX	USE EXIT I-XX NORTH
STAY ON US XXX SOUTH	USE I-XX E TO I-XX N
TRUCKS USE US XXX N	WATCH FOR TRUCKS
WATCH FOR TRUCKS	EXPECT DELAYS
EXPECT DELAYS	PREPARE TO STOP
REDUCE SPEED XXX FT	END SHOULDER USE
USE OTHER ROUTES	WATCH FOR WORKERS
STAY IN LANE *	

Location List

AT FM XXXX
BEFORE RAILROAD CROSSING
NEXT X MILES
PAST US XXX EXIT
XXXXXXX TO XXXXXXX
US XXX TO FM XXXX

Warning List

SPEED LIMIT XX MPH
MAXIMUM SPEED XX MPH
MINIMUM SPEED XX MPH
ADVISORY SPEED XX MPH
RIGHT LANE EXIT
USE CAUTION
DRIVE SAFELY
DRIVE WITH CARE

** Advance Notice List

TUE-FRI XX AM- X PM
APR XX-XX X PM-X AM
BEGINS MONDAY
BEGINS MAY XX
MAY X-X XX PM - XX AM
NEXT FRI-SUN
XX AM TO XX PM
NEXT TUE AUG XX
TONIGHT XX PM- XX AM

** See Application Guidelines Note 6.

Application Guidelines

1. Only 1 or 2 phases are to be used on a PCMS.
2. The 1st phase (or both) should be selected from the "Road/Lane/Ramp Closure List" and the "Other Condition List".
3. A 2nd phase can be selected from the "Action to Take/Effect on Travel, Location, General Warning, or Advance Notice Phase Lists".
4. A Location Phase is necessary only if a distance or location is not included in the first phase selected.
5. If two PCMS are used in sequence, they must be separated by a minimum of 1000 ft. Each PCMS shall be limted to two phases, and should be understandable by themselves.
6. For advance notice, when the current date is within seven days of the actual work date, calendar days should be replaced with days of the week. Advance notification should typically be for no more than one week prior to the work

Wording Alternatives

1. The words RIGHT, LEFT and ALL can be interchanged as appropriate.
2. Roadway designations IH, US, SH, FM and LP can be interchanged as appropriate.
3. EAST, WEST, NORTH and SOUTH (or abbreviations E, W, N and S) can be interchanged as appropriate.
4. Highway names and numbers replaced as appropriate.
5. ROAD, HIGHWAY and FREEWAY can be interchanged as needed.
6. AHEAD may be used instead of distances if necessary.
7. FT and MI, MILE and MILES interchanged as appropriate.
8. AT, BEFORE and PAST interchanged as needed.
9. Distances or AHEAD can be eliminated from the message if a location phase is used.

PCMS SIGNS WITHIN THE R.O.W. SHALL BE BEHIND GUARDRAIL OR CONCRETE BARRIER OR SHALL HAVE A MINIMUM OF FOUR (4) PLASTIC DRUMS PLACED PERPENDICULAR TO TRAFFIC ON THE UPSTREAM SIDE OF THE PCMS.

FULL MATRIX PCMS SIGNS

1. When Full Matrix PCMS signs are used, the character height and legibility/visibility requirements shall be maintained as listed in Note 15 under "PORTABLE CHANGEABLE MESSAGE SIGNS" above.
2. When symbol signs, such as the CW20-7a Flagger Symbol, are represented graphically on the Full Matrix PCMS sign and, with the approval of the Engineer, it shall maintain the legibility/visibility requirement listed above.
3. When symbol signs are represented graphically on the Full Matrix PCMS, they shall only supplement the use of the static sign represented, and shall not substitute for, or replace that sign.
4. A full matrix PCMS may be used to simulate a flashing arrow panel provided it meets the visibility, flash rate and dimming requirements on BC(7), for the same size arrow.

Texas Department of Transportation
Traffic Operations Division

BARRICADE AND CONSTRUCTION PORTABLE CHANGEABLE MESSAGE SIGN (PCMS) STANDARD

BC(6)-07

©TxDOT 11-4-02

DN: TXDOT	CK: TXDOT	DW: TXDOT	CK: TXDOT
9-07 REVISIONS	CONT	SECT	JOB	HIGHWAY
	DIST	COUNTY	SHEET NO. 13

DATE:
FILE:

DISCLAIMER: The use of this standard is governed by the "Texas Engineering Practice Act". No warranty of any kind is made by TxDOT for any purpose whatsoever. TxDOT assumes no responsibility for the conversion of this standard to other formats or for incorrect results or damages resulting from its use.

BARRIER REFLECTORS FOR CONCRETE TRAFFIC BARRIER AND ATTENUATORS

1. Barrier Reflectors shall be prequalified, and conform to the color and reflectivity requirements of DMS-8600. A list of prequalified Barrier Reflectors (Type C Delineators) can be found at the Material Producer List web address shown on BC(1).
2. Color of Barrier Reflectors shall be as specified in the TMUTCD. The cost of the reflectors shall be considered subsidiary to Item 502.

CONCRETE TRAFFIC BARRIER (CTB)

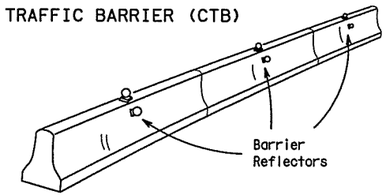

3. Where traffic is on one side of the CTB, two (2) Barrier Reflectors shall be mounted in approximately the midsection of each section of CTB. An alternate mounting location is uniformly spaced at one end of each CTB. This will allow for attachment of a barrier grapple without damaging the reflector. The Barrier Reflector mounted on the side of the CTB shall be located directly below the reflector mounted on top of the barrier, as shown in the detail above.
4. Where CTB separates two-way traffic, three barrier reflectors shall be mounted on each section of CTB. The reflector unit on top shall have two yellow reflective faces (Bi-Directional)while the reflectors on each side of the barrier shall have one yellow reflective face, as shown in the detail above.
5. When CTB separates traffic traveling in the same direction, no barrier reflectors will be required on top of the CTB.
6. Barrier Reflector units shall be yellow or white in color to match the edgeline being supplemented. Yellow Barrier Reflectors shall be made with Type E Fluorescent Prismatic Yellow Retroreflective Sheeting. White reflectors shall be made with Type D White Prismatic sheeting.
7. Maximum spacing of Barrier Reflectors is forty (40) feet.
8. Pavement markers or temporary flexible-reflective roadway marker tabs shall NOT be used as CTB delineation.
9. Attachment of Barrier Reflectors to CTB shall be per manufacturer's recommendations.
10. Missing or damaged Barrier Reflectors shall be replaced as directed by the Engineer.
11. Single slope barriers shall be delineated as shown on the above detail.

LOW PROFILE CONCRETE BARRIER (LPCB)

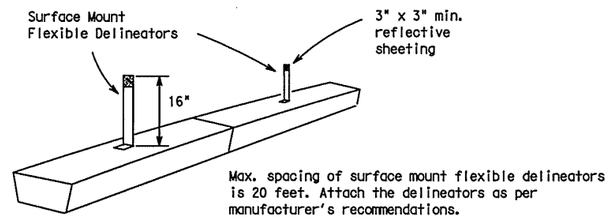

Max. spacing of surface mount flexible delineators is 20 feet. Attach the delineators as per manufacturer's recommendations.

DELINEATION OF END TREATMENTS

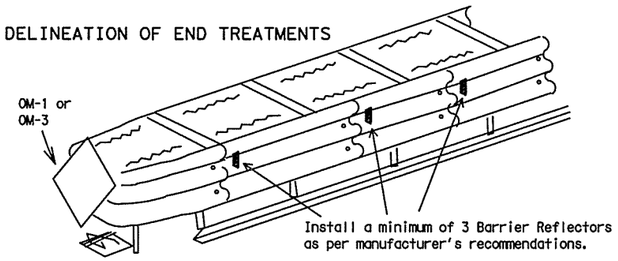

	APPROACHING TRAFFIC	
	BOTH SIDES	ONE SIDE
DELINEATION	OM-1	OM-3 or Vertical Panel

END TREATMENTS FOR CTB'S USED IN WORK ZONES

End treatments used on CTB's in work zones shall meet crashworthy standards as defined in the National Cooperative Highway Research Report 350. Refer to the CWZTCD List for approved end treatments and manufacturers.

TYPICAL FLASHING ARROW PANEL

Arrow Panels may be located behind channelizing devices in place for a shoulder taper or merging taper, otherwise they shall be delineated with four (4) channelizing devices placed perpendicular to traffic on the upstream side of traffic.

1. The Flashing Arrow Panel should be used for all lane closures on multi-lane roadways, or slow moving maintenance or construction activities on the travel lanes.
2. Flashing Arrow Panels should not be used on two-lane, two-way roadways, detours, diversions or work on shoulders unless the "CAUTION" display (see detail below) is used.
3. The Engineer/Inspector shall choose all appropriate signs, barricades and/or other traffic control devices that should be used in conjunction with the Flashing Arrow Panel.
4. The Flashing Arrow Panel should be able to display the following symbols:

Flashing RIGHT (LEFT) ARROW

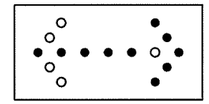

Flashing DOUBLE ARROW

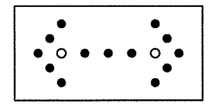

Flashing CAUTION

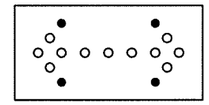

5. The "CAUTION" display consists of four corner lamps flashing simultaneously.
6. The straight line caution display is NOT ALLOWED.
7. The Flashing Arrow Panel shall be capable of minimum 50 percent dimming from rated lamp voltage. The flashing rate of the lamps shall not be less than 25 nor more than 40 flashes per minute.
8. Minimum lamp "on time" shall be approximately 50 percent for the flashing arrow and equal intervals of 25 percent for each sequential phase of the flashing chevron.
9. The sequential arrow display is NOT ALLOWED.
10. The flashing arrow display is the TxDOT standard; however, the sequential Chevron display may be used during daylight operations.

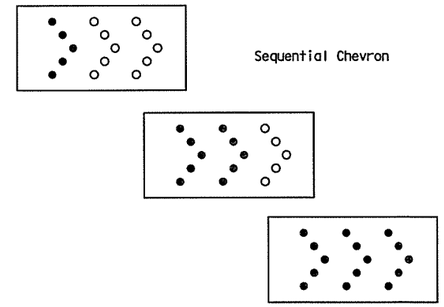

Sequential Chevron

REQUIREMENTS

TYPE	MINIMUM SIZE	MINIMUM NUMBER OF PANEL LAMPS	MINIMUM VISIBILITY DISTANCE
B	30 x 60	13	3/4 mile
C	48 x 96	15	1 mile

ATTENTION: Flashing Arrow Panels shall be equipped with automatic dimming devices.

WHEN NOT IN USE, REMOVE THE ARROW PANEL FROM THE RIGHT-OF-WAY OR PLACE THE ARROW PANEL BEHIND CONCRETE TRAFFIC BARRIER OR GUARDRAIL.

11. The Flashing Arrow Panel shall be mounted on a vehicle, trailer or other suitable support.
12. A Flashing Arrow Panel SHALL NOT BE USED to laterally shift traffic.
13. A full matrix PCMS may be used to simulate a Flashing Arrow Panel provided it meets visibility, flash rate and dimming requirements on this sheet for the same size arrow.
14. Minimum mounting height of trailer mounted arrow panels should be 7 feet from roadway to bottom of panel.

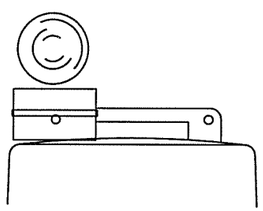

Type C Warning Light or approved substitute mounted adjacent to the travel way.

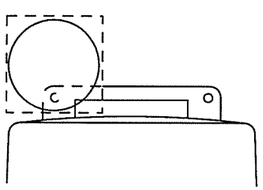

Warning reflector may be round or square.Must have a reflective surface area of at least 30 square inches

WARNING LIGHTS

1. Warning lights shall meet the requirements of the TMUTCD.
2. Warning lights shall NOT be installed on barricades.
3. Type A-Low Intensity Flashing Warning Lights are commonly used with drums. They are intended to warn of or mark a potentially hazardous area. Their use shall be as indicated on this sheet and/or other sheets of the plans by the designation "FL". The Type A Warning Lights shall not be used with signs manufactured with Type E Sheeting (Fluorescent Prismatic) meeting the requirements of Departmental Material Specification DMS-8300.
4. Type-C and Type D 360 degree Steady Burn Lights are intended to be used in a series for delineation to supplement other traffic control devices. Their use shall be as indicated on this sheet and/or other sheets of the plans by the designation "SB".
5. The Engineer/Inspector or the plans shall specify the location and type of warning lights to be installed on the traffic control devices.
6. When required by the Engineer, the Contractor shall furnish a copy of the warning lights certification. The warning light manufacturer will certify the warning lights meet the requirements of the latest ITE Purchase Specifications for Flashing and Steady-Burn Warning Lights.
7. When used to delineate curves, Type-C and Type D Steady Burn Lights should only be placed on the outside of the curve, not the inside.

WARNING LIGHTS MOUNTED ON PLASTIC DRUMS

1. Type A flashing warning lights are intended to warn drivers that they are approaching or are in a potentially hazardous area.
2. Type A random flashing warning lights are not intended for delineation and shall not be used in a series.
3. A series of sequential flashing warning lights placed on channelizing devices to form a merging taper may be used for delineation. If used, the successive flashing of the sequential warning lights should occur from the beginning of the taper to the end of the merging taper in order to identify the desired vehicle path. The rate of flashing for each light shall be 65 flashes per minute, plus or minus 10 flashes.
4. Type C and D steady-burn warning lights are intended to be used in a series to delineate the edge of the travel lane on detours, on lane changes, on lane closures, and on other similar conditions.
5. Type A, Type C and Type D warning lights shall be installed at locations as detailed on other sheets in the plans.
6. Warning lights shall not be installed on a drum that has a sign, chevron or vertical panel.
7. The maximum spacing for warning lights on drums should be identical to the channelizing device spacing.

WARNING REFLECTORS MOUNTED ON PLASTIC DRUMS AS A SUBSTITUTE FOR TYPE C (STEADY BURN) WARNING LIGHTS

1. A warning reflector or approved substitute may be mounted on a plastic drum as a substitute for a Type C, steady burn warning light at the discretion of the Contractor unless otherwise noted in the plans.
2. The warning reflector shall be yellow in color and shall be manufactured using a sign substrate approved for use with plastic drums listed on the CWZTCD.
3. The warning reflector shall have a minimum retroreflective surface area (one-side) of 30 square inches.
4. Round reflectors shall be fully reflectorized, including the area where attached to the drum.
5. Square substrates must have a minimum of 30 square inches of reflectorized sheeting. They do not have to be reflectorized where it attaches to the drum.
6. The side of the warning reflector facing approaching traffic shall have sheeting meeting the color and retroreflectivity requirements for DMS 8300-Type D (Non-fluorescent Prismatic).
7. When used near two-way traffic, both sides of the warning reflector shall be reflectorized.
8. The warning reflector should be mounted on the side of the handle nearest approaching traffic.
9. The maximum spacing for warning reflectors should be identical to the channelizing device spacing requirements.

TRUCK-MOUNTED ATTENUATORS

1. Truck-mounted attenuators (TMA) used on TxDOT facilities must meet the requirements outlined in the National Cooperative Highway Research Report No. 350 (NCHRP 350).
2. Refer to the CWZTCD for the requirements of Level 2 or Level 3 TMAs.
3. Refer to the dates shown in the CWZTCD to ensure that the TMA meets the age requirements and the crashworthiness criteria established by the Federal Highway Administration (FHWA) for TMAs.
4. Refer to the CWZTCD for a list of approved TMAs.
5. TMAs are required on freeways unless otherwise noted in the plans.
6. A TMA should be used anytime that it can be positioned approximately 30 to 100 feet in advance of the area of crew exposure without adversely affecting the work performance.
7. The only reason a TMA should not be required is when a work area is spread down the roadway and the work crew is an extended distance from the TMA.

Texas Department of Transportation
Traffic Operations Division

BARRICADE AND CONSTRUCTION ARROW PANEL, REFLECTORS, WARNING LIGHTS & ATTENUATOR STANDARD

7 of 12

BC(7)-07

©TxDOT 11-4-02

DN: TXDOT	CK: TXDOT	DW: TXDOT	CK: TXDOT
9-07 REVISIONS	CONT	SECT	JOB	HIGHWAY
	DIST	COUNTY	SHEET NO. 14

DATE:
FILE:

DISCLAIMER: The use of this standard is governed by the "Texas Engineering Practice Act". No warranty of any kind is made by TxDOT for any purpose whatsoever. TxDOT assumes no responsibility for the conversion of this standard to other formats or for incorrect results or damages resulting from its use.

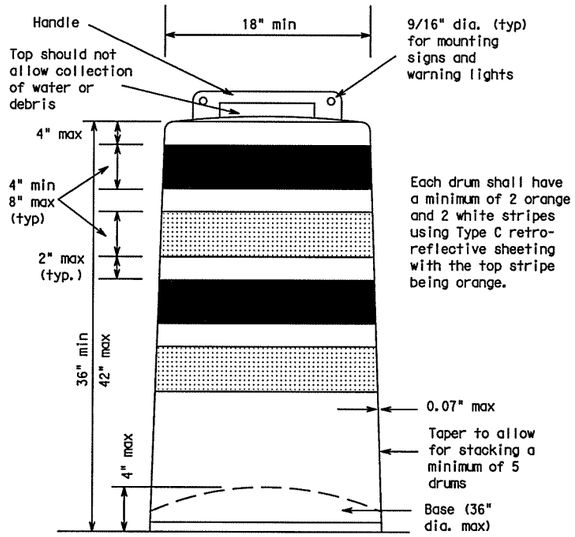

GENERAL NOTES

1. For long term stationary work zones on freeways, drums shall be used as the primary channelizing device.
2. For intermediate term stationary work zones on freeways, drums should be used as the primary channelizing device but may be replaced in tangent sections by vertical panels, or 42" two-piece cones. In tangent sections one-piece cones may be used with the approval of the Engineer but only if personnel are present on the project at all times to maintain the cones in proper position and location.
3. For short term stationary work zones on freeways, drums are the preferred channelizing device but may be replaced in tapers, transitions and tangent sections by vertical panels, two-piece cones ar one-piece cones as approved by the Engineer.
4. Drums and all related items shall comply with the requirements of the current version of the "Texas Manual on Uniform Traffic Control Devices" (TMUTCD) and the "Compliant Work Zone Traffic Control Devices List" (CWZTCD).
5. Drums, bases, and related materials shall exhibit good workmanship and shall be free from objectionable marks or defects that would adversely affect their appearance or serviceability.
6. The Contractor shall have a maximum of 24 hours to replace any plastic drums identified for replacement by the Engineer/Inspector. The replacement device must be an approved device.

GENERAL DESIGN REQUIREMENTS

Prequalified plastic drums shall meet the following requirements:

1. Plastic drums shall be a two-piece design; the "body" of the drum shall be the top portion and the "base" shall be the bottom.
2. The body and base shall lock together in such a manner that the body separates from the base when impacted by a vehicle traveling at a speed of 20 MPH or greater but prevents accidental separation due to normal handling and/or air turbulence created by passing vehicles.
3. Plastic drums shall be constructed of lightweight flexible, and deformable materials. The Contractor shall NOT use metal drums or single piece plastic drums as channelization devices or sign supports.
4. Drums shall present a profile that is a minimum of 18 inches in width at the 36 inch height when viewed from any direction. The height of drum unit (body installed on base) shall be a minimum of 36 inches and a maximum of 42 inches.
5. The top of the drum shall have a built-in handle for easy pickup and shall be designed to drain water and not collect debris. The handle shall have a minimum of two widely spaced 9/16 inch diameter holes to allow attachment of a warning light, warning reflector unit or approved compliant sign.
6. The exterior of the drum body shall have a minimum of four alternating orange and white retroreflective circumferential stripes not less than 4 inches nor greater than 8 inches in width. Any non-reflectorized space between any two adjacent stripes shall not exceed 2 inches in width.
7. Bases shall have a maximum width of 36 inches, a maximum height of 4 inches, and a minimum of two footholds of sufficient size to allow base to be held down while separating the drum body from the base.
8. Plastic drums shall be constructed of ultra-violet stabilized, orange, high-density polyethylene (HDPE) or other approved material.
9. Drum body shall have a minimum unballasted weight of 7.7 lbs. and maximum unballasted weight of 11 lbs. The wall of the drum body shall be a minimum of 0.07 inch in thickness. Weight of any drum supplied shall not vary more than 0.5 lb. from that of the prequalified sample.
10. Drum and base shall be marked with manufacturer's name and model number.

RETROREFLECTIVE SHEETING

1. The stripes used on drums shall be constructed of sheeting meeting the color and retroreflectivity requirements of Departmental Materials Specification DMS-8300, "Flat Surface Reflective Sheeting." High Specific Intensity (Type C) retroreflective sheeting shall be supplied unless otherwise specified in the plans.
2. The sheeting shall be suitable for use on and shall adhere to the drum surface such that, upon vehicular impact, the sheeting shall remain adhered in-place and exhibit no delaminating, cracking, or loss of retroreflectivity other than that loss due to abrasion of the sheeting surface.

BALLAST

1. Unballasted bases shall be large enough to hold up to 50 lbs. of sand. This base, when filled with the ballast material, should weigh between 35 lbs (minimum) and 50 lbs (maximum). The ballast may be sand in one to three sandbags separate from the base, sand in a sand-filled plastic base, or other ballasting devices as approved by the Engineer. Stacking of sandbags will be allowed, however height of sandbags above pavement surface may not exceed 12 inches.
2. Bases with built-in ballast shall weigh between 40 lbs. and 50 lbs. Built-in ballast can be constructed of an integral crumb rubber base or a solid rubber base.
3. The ballast shall not be heavy objects, water, or any material that would become hazardous to motorists, pedestrians, or workers when the drum is struck by a vehicle.
4. When used in regions susceptible to freezing, drums shall have drainage holes in the bottoms so that water will not collect and freeze becoming a hazard when struck by a vehicle.
5. Ballast shall not be placed on top of drums.
6. Adhesives may be used to secure base of drums to pavement.

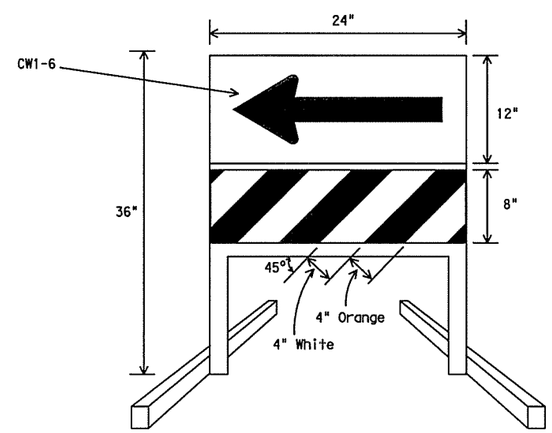

DIRECTION INDICATOR BARRICADE

1. The Direction Indicator Barricade may be used in tapers, transitions, and other areas where specific directional guidance to drivers is necessary.
2. If used, the Direction Indicator Barricade should be used in series to direct the driver through the transition and into the intended travel lane.
3. The Direction Indicator Barricade shall consist of One-Direction Large Arrow (CW1-6) sign in the size shown with a black arrow on a background of Type E Fluorescent Prismatic Orange above a rail with Type C High Specific Intensity retroreflective sheeting in alternation 4" white and orange stripes sloping downward at an angle of 45 degrees in the direction road users are to pass.
4. Double arrows on the Direction Indicator Barricade will not be allowed.
5. Approved manufacturers are shown on the CWZTCD List. Ballast shall be as approved by the manufacturers instructions.

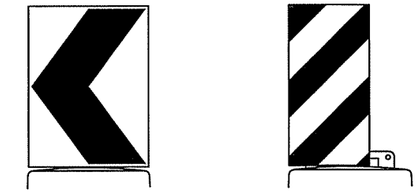

18" x 24" Sign (Maximum Sign Dimension) Chevron CW1-8, Opposing Traffic Lane Divider, Driveway sign D70a, Keep Right R4 series or other signs as approved by Engineer

12" x 24" Vertical Panel mount with diagonals sloping down towards travel way

Plywood, Aluminum or Metal sign substrates shall NOT be used on plastic drums

SIGNS, CHEVRONS, AND VERTICAL PANELS MOUNTED ON PLASTIC DRUMS

1. Signs used on plastic drums shall be manufactured using substrates listed on the CWZTCD.
2. Chevrons and other work zone signs with an orange background shall be manufactured with Type E (Fluorescent Prismatic) sheeting meeting the color and retroreflectivity requirements of DMS-8300, "Sign Face Material," unless otherwise specified in the plans.
3. Vertical Panels shall be manufactured with orange and white sheeting meeting the requirements of DMS-8300 Type C (High Specific Intensity). Diagonal stripes on Vertical Panels shall slope down toward the intended traveled lane.
4. Other sign messages (text or symbolic) may be used as approved by the Engineer. Sign dimensions shall not exceed 18 inches in width or 24 inches in height.
5. Signs shall be installed using a 1/2 inch bolt (nominal) and nut, two washers, and one locking washer for each connection.
6. Mounting bolts and nuts shall be fully engaged and adequately torqued. Bolts should not extend more than 1/2 inch beyond nuts.
7. Chevrons may be placed on drums on the outside of curves, on merging tapers or on shifting tapers. When used in these locations they may be placed on every drum or spaced not more than on every third drum. A minimum of three (3) should be used at each location called for in the plans.
8. R9-9, R9-10, R9-11 and R9-11a Sidewalk Closed signs which are 24 inches wide may be mounted on plastic drums, with approval of the Engineer.

Texas Department of Transportation
Traffic Operations Division

BARRICADE AND CONSTRUCTION CHANNELIZING DEVICES STANDARD

8 of 12 BC(8)-07

©TxDOT 11-4-02	DN: TXDOT	CK: TXDOT	DW: TXDOT	CK: TXDOT
4-03 REVISIONS 9-07	CONT	SECT	JOB	HIGHWAY
	DIST	COUNTY		SHEET NO. 15

DATE:
FILE:

DISCLAIMER: The use of this standard is governed by the "Texas Engineering Practice Act". No warranty of any kind is made by TxDOT for any purpose whatsoever. TxDOT assumes no responsibility for the conversion of this standard to other formats or for incorrect results or damages resulting from its use.

CHANNELIZING DEVICES

VERTICAL PANELS (VPs)

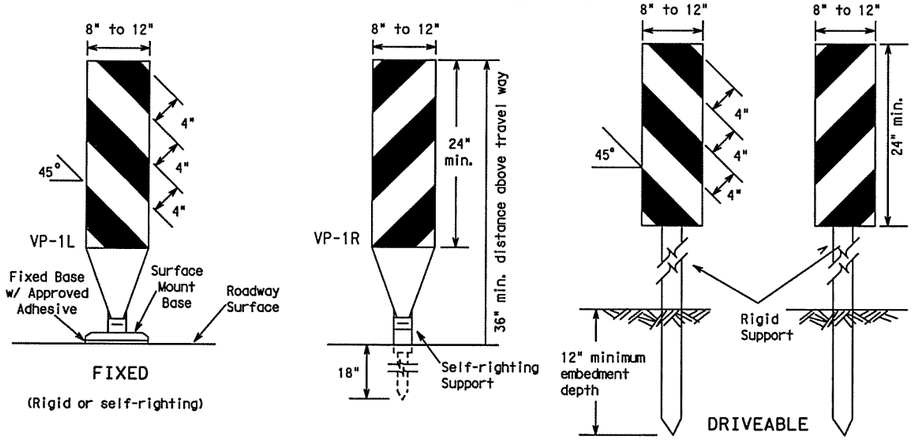

1. Vertical Panels (VP's) are normally used to channelize traffic or divide opposing lanes of traffic.
2. VP's may be used in daytime or nighttime situations. They may be used at the edge of shoulder drop-offs and other areas such as lane transitions where positive daytime and nighttime delineation is required. The Engineer/Inspector shall refer to the Roadway Design Manual Appendix B "Treatment of Pavement Drop-offs in Work Zones" for additional guidelines on the use of VP's for drop-offs.
3. VP's should be mounted back to back if used at the edge of cuts adjacent to two-way two lane roadways. Stripes are to be reflective orange and reflective white and should always slope downward toward the travel lane.
4. VP's used on expressways and freeways or other high speed roadways, shall have a minimum of 270 square inches of retroreflective area facing traffic.
5. Self-righting supports are available with portable base. See "Compliant Work Zone Traffic Control Devices List" (CWZTCD).
6. Sheeting for the VP's shall be retroreflective Type C (High Specific Intensity) conforming to Departmental Material Specification DMS-8300, unless noted otherwise.
7. Where the height of reflective material on the vertical panel is greater than 36 inches, a panel stripe of 6 inches shall be used.

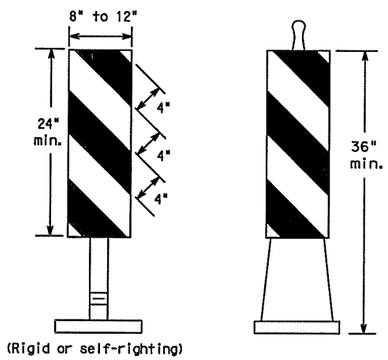

PORTABLE

CHEVRONS

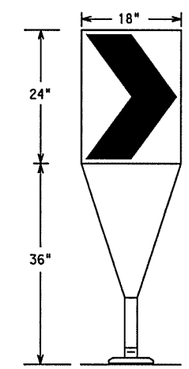

Fixed Base w/ Approved Adhesive (Driveable Base, or Flexible Support can be used)

1. The chevron shall be a vertical rectangle with a minimum size of 12 by 18 inches.
2. Chevrons are intended to give notice of a sharp change of alignment with the direction of travel and provide additional emphasis and guidance for vehicle operators with regard to changes in horizontal alignment of the roadway.
3. Chevrons, when used, shall be erected on the outside of a sharp curve or turn, or on the far side of an intersection. They shall be in line with and at right angles to approaching traffic. Spacing should be such that the motorist always has three in view, until the change in alignment eliminates its need.
4. To be effective, the chevron should be visible for at least 500 feet.
5. Chevrons shall be orange with a black nonreflective legend. Sheeting for the chevron shall be retroreflective Type E (Fluorescent Prismatic) conforming to Departmental Material Specification DMS-8300, unless noted otherwise. The legend shall be black vinyl non-reflective decal sheeting meeting the requirements of DMS-8300.
6. For Long Term Stationary use on tapers or transitions on freeways and divided highways self-righting chevrons may be used to supplement plastic drums but not to replace plastic drums.

GENERAL NOTES:

1. Work Zone channelizing devices illustrated on this sheet may be installed in close proximity to traffic and are suitable for use on high or low speed roadways. The Engineer/Inspector shall ensure that spacing and placement is uniform and in accordance with the "Texas Manual on Uniform Traffic Control Devices" (TMUTCD).
2. Channelizing devices shown on this sheet may have a driveable, fixed or portable base. The requirement for self-righting channelizing devices must be specified in the General Notes or other plan sheets.
3. Channelizing devices on self-righting supports should be used in work zone areas where channelizing devices are frequently impacted by errant vehicles or vehicle related wind gusts making alignment of the channelizing devices difficult to maintain. Locations of these devices shall be detailed elsewhere in the plans. These devices shall conform to the TMUTCD and the "Compliant Work Zone Traffic Control Devices List" (CWZTCD).
4. The Contractor shall maintain devices in a clean condition and replace damaged, nonreflective, faded, or broken devices and bases as required by the Engineer/Inspector. The Contractor shall be required to maintain proper device spacing and alignment.
5. Portable bases shall be fabricated from virgin and/or recycled rubber. The portable bases shall weigh approximately 35 lbs.
6. Pavement surfaces shall be prepared in a manner that ensures proper bonding between the adhesives, the fixed mount bases and the pavement surface. Adhesives shall be prepared and applied according to the manufacturer's recommendations.
7. The installation and removal of channelizing devices shall not cause detrimental effects to the final pavement surfaces, including pavement surface discoloration or surface integrity. Driveable bases shall not be permitted on final pavement surfaces. The Engineer/Inspector shall approve all application and removal procedures of fixed bases.
8. Examples on this sheet are commonly used channelizing devices in work zones. For other devices, refer to the CWZTCD.

OPPOSING TRAFFIC LANE DIVIDERS (OTLD)

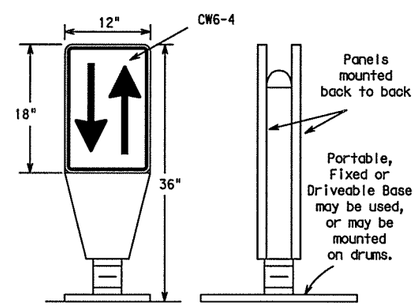

1. Opposing Traffic Lane Dividers (OTLD) are delineation devices designed to convert a normal one-way roadway section to two-way operation. OTLD's are used on temporary centerlines. The upward and downward arrows on the sign's face indicate the direction of traffic on either side of the divider. The base is secured to the pavement with an adhesive or rubber weight to minimize movement caused by a vehicle impact or wind gust.
2. The OTLD may be used in combination with simple tubular markers or VPs.
3. Spacing between the OTLD shall not exceed 500 feet. Tubular markers or VPs placed between the OTLD's should not exceed 100 foot spacing.
4. The OTLD shall be orange with a black nonreflective legend. Sheeting for the OTLD shall be retroreflective Type E (Fluorescent Prismatic) conforming to Departmental Material Specification DMS-8300, unless noted otherwise. The legend shall be black vinyl non-reflective decal sheeting meeting the requirements of DMS-8300.

Posted Speed	Formula	Minimum Desirable Taper Lengths ✱✱ 10' Offset	11' Offset	12' Offset	Suggested Maximum Spacing of Channelizing Devices On a Taper	On a Tangent
30	$L = \frac{WS^2}{60}$	150'	165'	180'	30'	60'-75'
35		205'	225'	245'	35'	70'-90'
40		265'	295'	320'	40'	80'-100'
45	L=WS	450'	495'	540'	45'	90'-110'
50		500'	550'	600'	50'	100'-125'
55		550'	605'	660'	55'	110'-140'
60		600'	660'	720'	60'	120'-150'
65		650'	715'	780'	65'	130'-165'
70		700'	770'	840'	70'	140'-175'
75		750'	825'	900'	75'	150'-185'
80		800'	880'	960'	80'	160'-195'

✱✱Taper lengths have been rounded off.
L=Length of Taper (FT.) W=Width of Offset (FT.)
S=Posted Speed (MPH)

HOLLOW OR WATER BALLASTED SYSTEMS USED AS LONGITUDINAL CHANNELIZING DEVICES OR BARRIERS

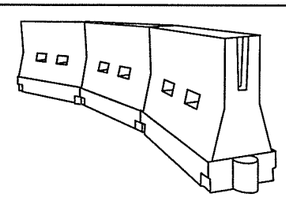

LONGITUDINAL CHANNELIZING DEVICES

1. Longitudinal channelizing devices are crashworthy, lightweight, deformable devices that are highly visible, have good target value and can be connected together. **They are not designed to contain or redirect a vehicle on impact.**
2. Longitudinal channelizing devices may be used instead of a line of cones or drums.
3. Longitudinal channelizing devices shall be placed in accordance to application and installation requirements specific to the device, and used only when shown on the CWZTCD list.
4. Longitudinal channelizing devices should not be used to provide positive protection for obstacles, pedestrians or workers.
5. Longitudinal channelizing devices shall be retroreflective, or supplemented with retroreflective delineation as required for temporary barriers on BC(7)-07.

WATER BALLASTED SYSTEMS USED AS BARRIERS

1. Water ballasted systems used as barriers shall not be used solely to channelize road users, but also to protect the work space per the appropriate NCHRP 350 crashworthiness requirements based on roadway speed and barrier application.
2. Water ballasted systems used to channelize vehicular traffic shall be supplemented with retroreflective delineation or channelizing devices to improve daytime/nighttime visibility. They may also be supplemented with pavement markings.
3. Water ballasted systems used as barriers shall be placed in accordance to application and installation requirements specific to the device, and used only when shown on the CWZTCD list.
4. Water ballasted systems used as barriers should not be used for a merging taper except in low speed (less than 45 MPH) urban areas. When used on a taper in a low speed urban area, the taper shall be delineated and the taper length should be designed to optimize road user operations considering the available geometric conditions.
5. When water ballasted systems used as barriers have blunt ends exposed to traffic, they should be attenuated as per manufacturer recommendations or flared to point outside the clear zone.

If used to channelize pedestrians, longitudinal channelizing devices or water ballasted systems must have a continuous detectable bottom for users of long canes and the top of the unit shall be not less than 32 inches in height.

VERTICAL PANELS & OPPOSING TRAFFIC LANE DIVIDERS SEPARATING TWO-WAY TRAFFIC (Typical application)

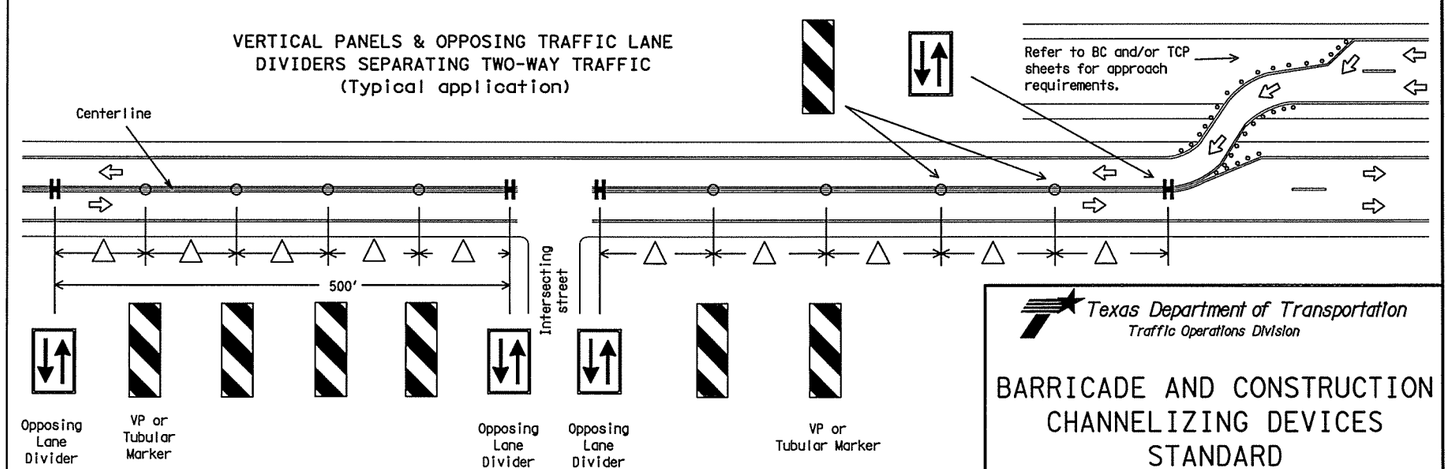

△ Spacing between the VP's or tubular markers shall not exceed 100 feet. On roadways with speeds less than 45 MPH, spacing between the tubular markers or VP's shall be as shown on the channelizing spacing table shown on this page. If the table shows spacing greater than 100 feet based on the roadway speed, then use a maximum of 100 feet spacing between the tubular markers or VP's. Every fifth channelizing device shall be an OTLD, except when the OLTD must be spaced closer to accomodate an intersection. Spacing between the OTLD shall not exceed 500 feet.

Texas Department of Transportation
Traffic Operations Division

BARRICADE AND CONSTRUCTION CHANNELIZING DEVICES STANDARD

9 of 12 BC(9)-07

©TxDOT 11-4-02

DN: TXDOT	CK: TXDOT	DW: TXDOT	CK: TXDOT
9-07 REVISIONS	CONT	SECT	JOB	HIGHWAY
	DIST	COUNTY	SHEET NO. 16

DATE:
FILE:

DISCLAIMER: The use of this standard is governed by the "Texas Engineering Practice Act". No warranty of any kind is made by TxDOT for any purpose whatsoever. TxDOT assumes no responsibility for the conversion of this standard to other formats or for incorrect results or damages resulting from its use.

TYPE III BARRICADES

1. Refer to the Compliant Work Zone Traffic Control Devices List (CWZTCD) for details of the Type III Barricades and a list of all materials used in the construction of Type III Barricades.
2. Type III Barricades shall be used at each end of construction projects closed to all traffic.
3. Barricades extending across a roadway should have stripes that slope downward in the direction toward which traffic must turn in detouring. When both right and left turns are provided, the chevron striping may slope downward in both directions from the center of the barricade. Where no turns are provided at a closed road striping should slope downward in both directions toward the center of roadway.
4. Striping of rails, for the right side of the roadway, should slope downward to the left. For the left side of the roadway, striping should slope downward to the right.
5. Identification markings may be shown only on the back of the barricade rails. The maximum height of letters and/or company logos used for identification shall be 1".
6. Barricades shall not be placed parallel to traffic unless an adequate clear zone is provided.
7. Warning lights shall NOT be installed on barricades.
8. Where barricades require the use of weights to keep from turning over, the use of sandbags with dry, cohesionless sand is recommended. The sandbags will be tied shut to keep the sand from spilling and to maintain a constant weight. Sand bags shall not be stacked in a manner that covers any portion of a barricade rails reflective sheeting. Rock, concrete, iron, steel or other solid objects will NOT be permitted. Sandbags should weigh a minimum of 35 lbs and a maximum of 50 lbs. Sandbags shall be made of a durable material that tears upon vehicular impact. Rubber (such as tire inner tubes) shall not be used for sandbags. Sandbags shall only be placed along or upon the base supports of the device and shall not be suspended above ground level or hung with rope, wire, chains or other fasteners.
9. Sheeting for barricades shall be retroreflective Type C (High Specific Intensity) conforming to Departmental Material Specfication DMS-8300 unless otherwise noted.

Barricades shall NOT be used as a sign support.

TYPICAL STRIPING DETAIL FOR BARRICADE RAIL

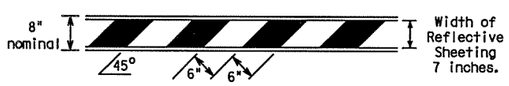

TYPICAL PANEL DETAIL FOR SKID OR POST TYPE BARRICADES

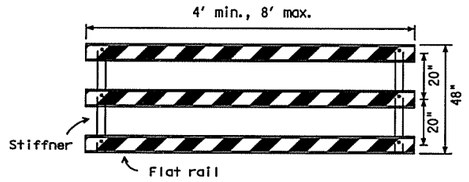

Stiffner may be inside or outside of support, but no more than 2 stiffeners shall be allowed on one barricade.

TYPE III BARRICADE (POST AND SKID) TYPICAL APPLICATION

Each roadway of a divided highway shall be barricaded in the same manner.

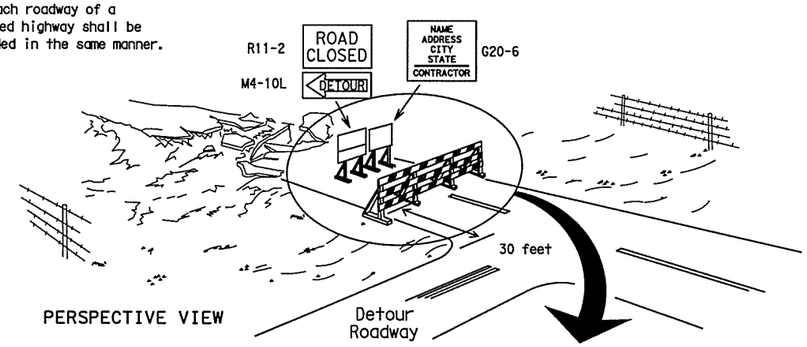

PERSPECTIVE VIEW

The three rails on Type III barricades shall be reflectorized orange and reflective white stripes on one side facing one-way traffic and both sides for two-way traffic.
Barricade striping should slant downward in the direction of detour.

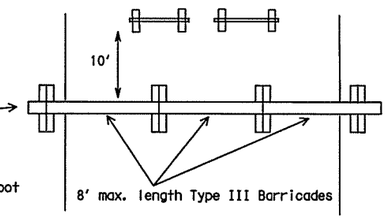

PLAN VIEW

1. Signs should be mounted on independent supports at a 7 foot mounting height in center of roadway. The signs should be a minimum of 10 feet behind Type III Barricades.
2. Advance signing shall be as specified elsewhere in the plans.

CULVERT WIDENING OR OTHER ISOLATED WORK WITHIN THE PROJECT LIMITS

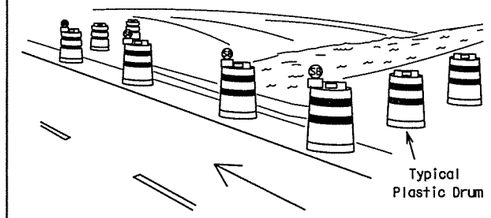

PERSPECTIVE VIEW

1. Where positive redirectional capability is provided, drums may be omitted.
2. Plastic construction fencing may be used with drums for safety as required in the plans.
3. Vertical Panels on flexible support may be substituted for drums when the shoulder width is less than 4 feet.
4. When the shoulder width is greater than 12 feet, steady-burn lights may be omitted if drums are used.
5. Drums must extend the length of the culvert widening.

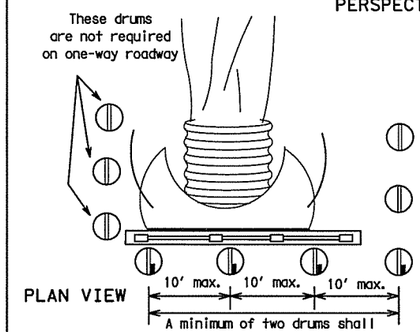

PLAN VIEW

Increase number of plastic drums on the side of approaching traffic if the crown width makes it necessary. (minimum of 2 and maximum of 4 drums)

Legend

- Plastic drum
- Plastic drum with steady burn light or yellow warning reflector
- SB Steady burn warning light or yellow warning reflector

CONES

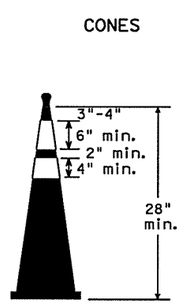

Two-Piece cones

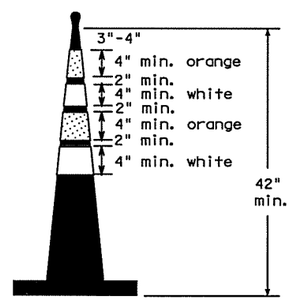

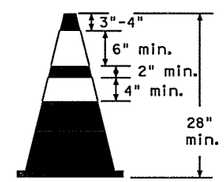

One-Piece cones

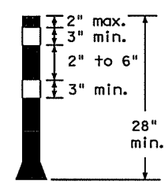

Tubular Marker

28" Cones shall have a minimum weight of 9 1/2 lbs.

42" 2-piece cones shall have a minimum weight of 30 lbs. including base.

1. Traffic cones and tubular markers shall be a minimum of 28 inches in height when used either on freeways or at nighttime.
2. Cones or tubular markers shall be predominantly orange, fluorescent red-orange, or fluorescent yellow-orange. They should be kept clean and bright for maximum visibility.
3. Cones used only for daytime operations do not require the reflectorized bands.
4. Cones and tubular markers used for nighttime operations shall be reflectorized. Reflectorized material shall have a smooth, sealed outer surface that displays the same approximate color during the day and night. The reflectorized bands shall be retroreflective Type C (High Specific Intensity) conforming to Departmental Material Specification DMS-8300, unless otherwise noted.
5. When used at night, appropriate personnel shall ensure that cones and tubular markers remain in their proper location and in an upright position.
6. Reflectorization of 28"cones shall consist of a minimum 6 inch band placed at least 3 inches but not more than 4 inches from the top, supplemented by a minimum 4 inch band spaced a minimum of 2 inches below the 6 inch band.
7. Reflectorization of 42" cones shall be provided by alternating 4 to 6" orange and white stripes with orange on top.
8. Reflectorization of tubular markers shall be a minimum of two 3 inch bands placed a maximum of 2 inches from the top with a maximum of 6 inches between bands.
9. One-piece cones or tubular markers are generally suitable for temporary usage (up to 8 hours) with other channelization devices such as vertical panels, drums or two-piece cones for long term usage. Care should be taken to ensure they remain in their proper location and in an upright position.
10. Cones or tubular markers used on each project shall be of the same size and shape.
11. The handle may be designed as a hook or other shape, fabricated from non-rigid materials similar to the cone material, and may extend up to a maximum of 8 inches above the top of cone. Length of the handle shall not be considered with regard to the overall height of the cone.

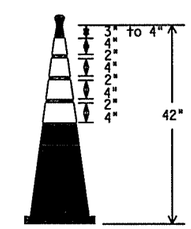

EDGELINE CHANNELIZER

1. This device is intended only for use in place of a vertical panel to channelize traffic by indicating the edge of the travel lane. It is not intended to be used in transitions or tapers.
2. This device shall not be used to separate lanes of traffic (opposing or otherwise) or warn of objects.
3. This device is based on a 42 inch, two-piece cone with an alternate striping pattern: four 4 inch retroreflective bands, with an approximate 2 inch gap between bands. The color of the band should correspond to the color of the edgeline (yellow for left edgeline, white for right edgeline) for which the device is substituted or for which it supplements. The reflectorized bands shall be retroreflective Type C encapsulated bead (High Specific Intensity) conforming to Departmental Material Specification DMS-8300, unless otherwise noted.
4. The base must weigh a minimum of 30 lbs.

TRAFFIC CONTROL FOR MATERIAL STOCKPILES

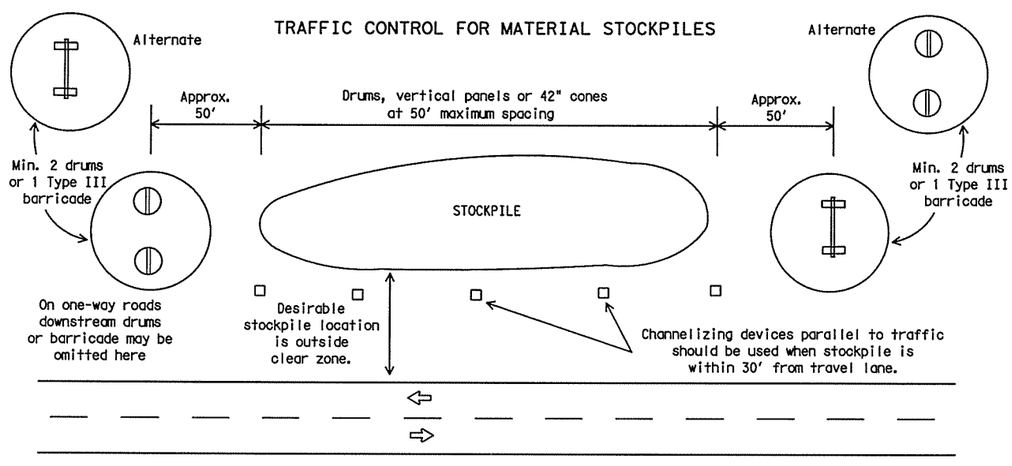

Texas Department of Transportation
Traffic Operations Division

BARRICADE AND CONSTRUCTION CHANNELIZING DEVICES STANDARD

10 of 12 BC(10)-07

©TxDOT 11-4-02	DN: TXDOT	CK: TXDOT	DW: TXDOT	CK: TXDOT
9-07 REVISIONS	CONT	SECT	JOB	HIGHWAY
	DIST		COUNTY	SHEET NO. 17

109A

DATE:
FILE:

DISCLAIMER: The use of this standard is governed by the "Texas Engineering Practice Act". No warranty of any kind is made by TxDOT for any purpose whatsoever. TxDOT assumes no responsibility for the conversion of this standard to other formats or for incorrect results or damages resulting from its use.

WORK ZONE PAVEMENT MARKINGS

GENERAL

1. The Contractor shall be responsible for maintaining work zone and existing pavement markings, in accordance with the standard specifications and special provisions, on all roadways open to traffic within the CSJ limits unless otherwise stated in the plans.
2. Color, patterns and dimensions shall be in conformance with the "Texas Manual on Uniform Traffic Control Devices" (TMUTCD).
3. Additional supplemental pavement marking details may be found in the plans or specifications.
4. Pavement markings shall be installed in accordance with the TMUTCD and as shown on the plans.
5. When short term markings are required on the plans, short term markings shall conform with the TMUTCD, the plans and details as shown on the Standard Plan Sheet WZ(STPM).
6. When standard pavement markings are not in place and the roadway is opened to traffic, DO NOT PASS signs shall be erected to mark the beginning of the sections where passing is prohibited and PASS WITH CARE signs at the beginning of sections where passing is permitted.
7. All work zone pavement markings shall be installed in accordance with Item 662, "Work Zone Pavement Markings."

RAISED PAVEMENT MARKERS

1. Raised pavement markers are to be placed according to the patterns on BC(12).
2. All raised pavement markers used for work zone markings shall meet the requirements of Item 672, "RAISED PAVEMENT MARKERS" and Departmental Material Specification DMS-4200 or DMS-4300.

PREFABRICATED PAVEMENT MARKINGS

1. Removable prefabricated pavement markings shall meet the requirements of DMS-8241.
2. Non-removable prefabricated pavement markings (foil back) shall meet the requirements of DMS-8240.

MAINTAINING WORK ZONE PAVEMENT MARKINGS

1. The Contractor will be responsible for maintaining work zone pavement markings within the work limits.
2. Work zone pavement markings shall be inspected in accordance with the frequency and reporting requirements of work zone traffic control device inspections as required by Form 599.
3. The markings should provide a visible reference for a minimum distance of 300 feet during normal daylight hours and 160 feet when illuminated by automobile low-beam headlights at night, unless sight distance is restricted by roadway geometrics.
4. Markings failing to meet this criteria within the first 30 days after placement shall be replaced at the expense of the Contractor as per Specification Item 662.

REMOVAL OF PAVEMENT MARKINGS

1. Pavement markings that are no longer applicable, could create confusion or direct a motorist toward or into the closed portion of the roadway, shall be removed or obliterated before the roadway is opened to traffic.
2. The above shall not apply to detours in place for less than two weeks, where flaggers and/or sufficient channelizing devices are used in lieu of markings to outline the detour route.
3. Pavement markings shall be removed to the fullest extent possible, so as not to leave a discernable marking. This shall be by any method approved by TxDOT Specification Item 677 for "Eliminating Existing Pavement Markings and Markers".
4. The removal of pavement markings may require resurfacing or seal coating portions of the roadway.
5. Subject to the approval of the Engineer, any method that proves to be successful on a particular type pavement may be used.
6. Blast cleaning may be used but will not be required unless specifically shown in the plans.
7. Over-painting of the markings SHALL NOT BE permitted.
8. Removal of raised pavement markers shall be as directed by the Engineer.
9. Removal of existing pavement markings and markers will be paid for directly in accordance with Item 677, "ELIMINATING EXISTING PAVEMENT MARKINGS AND MARKERS," unless otherwise stated in the plans.
10. Black-out marking tape may be used to cover conflicting existing markings for periods less than two weeks when approved by the Engineer.

Temporary Flexible-Reflective Roadway Marker Tabs

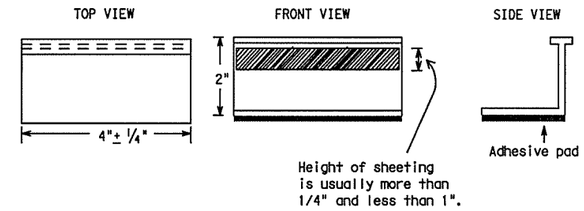

STAPLES OR NAILS SHALL NOT BE USED TO SECURE TEMPORARY FLEXIBLE-REFLECTIVE ROADWAY MARKER TABS TO THE PAVEMENT SURFACE

1. Temporary flexible-reflective roadway marker tabs used as guidemarks shall meet the requirements of DMS-8242.
2. Tabs detailed on this sheet are to be inspected and accepted by the Engineer or designated representative. Sampling and testing is not normally required, however at the option of the Engineer, either "A" or "B" below may be imposed to assure quality before placement on the roadway.
   A. Select five (5) or more tabs at random from each lot or shipment and submit to the Construction Division, Materials and Pavement Section to determine specification compliance.
   B. Select five (5) tabs and perform the following test. Affix five (5) tabs at 24 inch intervals on an asphaltic pavement in a straight line. Using a medium size passenger vehicle or pickup, run over the markers with the front and rear tires at a speed of 35 to 40 miles per hour, four (4) times in each direction. No more than one (1) out of the five (5) reflective surfaces shall be lost or displaced as a result of this test.
3. Small design variances may be noted between tab manufacturers.
4. See Standard Sheet WZ(STPM) for tab placement on new pavements. See Standard Sheet TCP(7-1) for tab placement on seal coat work.

Raised Pavement Markers used as Guidemarks

1. Raised pavement markers used as guidemarks shall be from the approved product list, and meet the requirements of DMS-4200.
2. All temporary construction raised pavement markers provided on a project shall be of the same manufacturer.
3. Adhesive for guidemarks shall be bituminous material hot applied or butyl rubber pad for all surfaces, or thermoplastic for concrete surfaces.

Guidemarks shall be designated as:
YELLOW - (two amber reflective surfaces with yellow body).
WHITE - (one silver reflective surface with white body).

DEPARTMENTAL MATERIAL SPECIFICATIONS

PAVEMENT MARKERS (REFLECTORIZED)	DMS-4200
TRAFFIC BUTTONS	DMS-4300
EPOXY AND ADHESIVES	DMS-6100
BITUMINOUS ADHESIVE FOR PAVEMENT MARKERS	DMS-6130
PREFABRICATED PAVEMENT MARKINGS-PERMANENT	DMS-8240
PREFABRICATED PAVEMENT MARKINGS-REMOVABLE	DMS-8241
TEMPORARY FLEXIBLE-REFLECTIVE ROADWAY MARKER TABS	DMS-8242

A list of prequalified reflective raised pavement markers, non-reflective traffic buttons, roadway marker tabs and other pavement markings can be found at the Material Producer List web address shown on BC(1).

Texas Department of Transportation
Traffic Operations Division

BARRICADE AND CONSTRUCTION PAVEMENT MARKINGS STANDARD

BC(11)-07

©TxDOT February 1998

DN: TXDOT	CK: TXDOT	DW: TXDOT	CK: TXDOT
CONT	SECT	JOB	HIGHWAY
DIST	COUNTY		SHEET NO. 16

REVISIONS
2-98
1-02
11-02
9-07

DATE:
FILE:

109B

DISCLAIMER: The use of this standard is governed by the "Texas Engineering Practice Act". No warranty of any kind is made by TxDOT for any purpose whatsoever. TxDOT assumes no responsibility for the conversion of this standard to other formats or for incorrect results or damages resulting from its use.

PAVEMENT MARKING PATTERNS

CENTER LINE & NO-PASSING ZONE BARRIER LINES FOR TWO-LANE, TWO-WAY HIGHWAYS

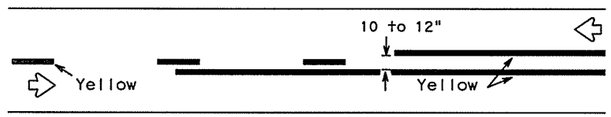

REFLECTORIZED PAVEMENT MARKINGS - PATTERN A

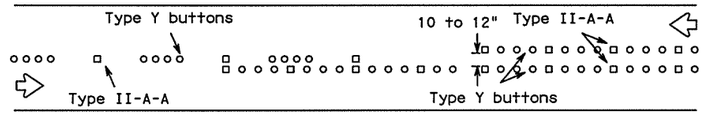

RAISED PAVEMENT MARKERS - PATTERN A

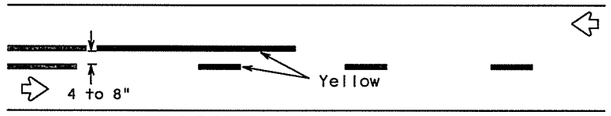

REFLECTORIZED PAVEMENT MARKINGS - PATTERN B

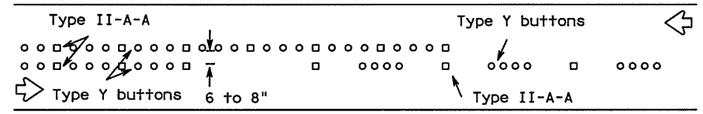

RAISED PAVEMENT MARKERS - PATTERN B

Pattern A is the TXDOT Standard, however Pattern B may be used if approved by the Engineer.
Prefabricated markings may be substituted for reflectorized pavement markings.

EDGE & LANE LINES FOR DIVIDED HIGHWAY

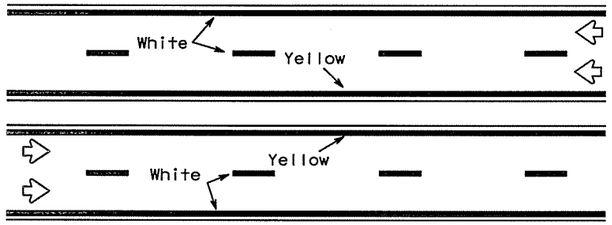

REFLECTORIZED PAVEMENT MARKINGS

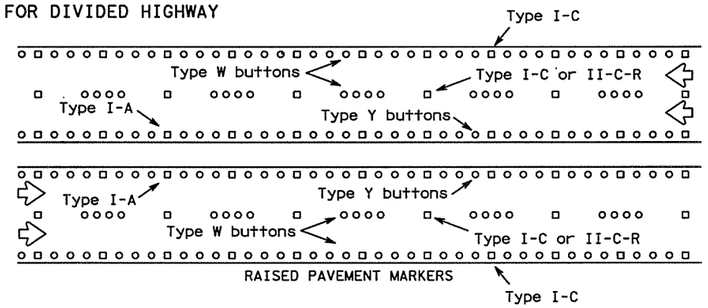

RAISED PAVEMENT MARKERS

Prefabricated markings may be substituted for reflectorized pavement markings.

LANE & CENTER LINES FOR MULTILANE UNDIVIDED HIGHWAYS

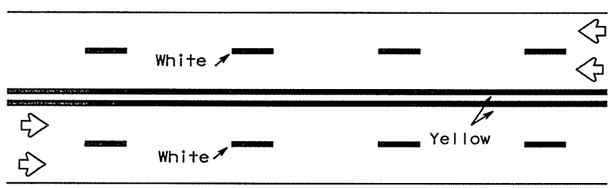

REFLECTORIZED PAVEMENT MARKINGS

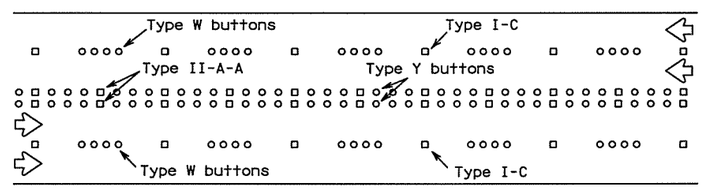

RAISED PAVEMENT MARKERS

Prefabricated markings may be substituted for reflectorized pavement markings.

TWO-WAY LEFT TURN LANE

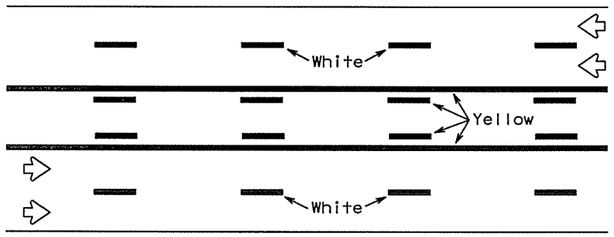

REFLECTORIZED PAVEMENT MARKINGS

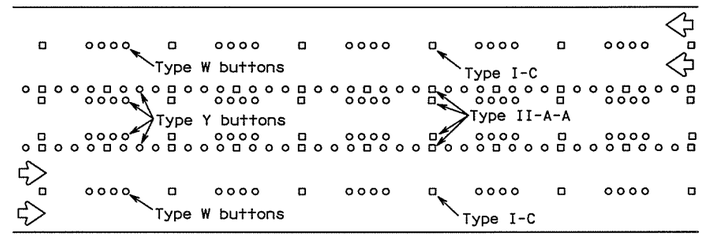

RAISED PAVEMENT MARKERS

Prefabricated markings may be substituted for reflectorized pavement markings.

STANDARD WORK ZONE PAVEMENT MARKINGS DETAILS

SOLID LINES

DOUBLE NO-PASSING LINE

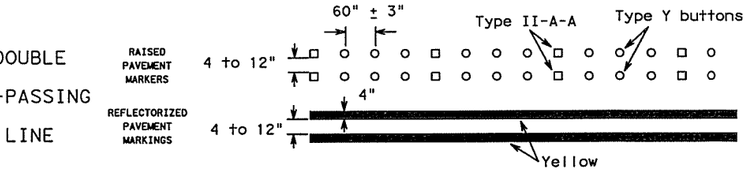

EDGE LINE OR SINGLE NO-PASSING LINE

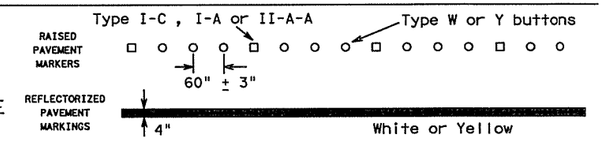

WIDE LINE

(FOR LEFT TURN CHANNELIZING LINE OR CHANNELIZING LINE USED TO DISCOURAGE LANE CHANGING.)

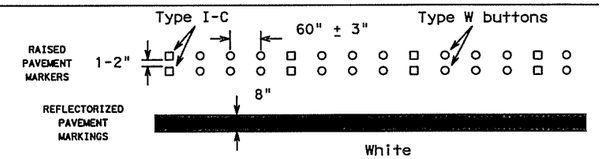

BROKEN LINE

(FOR CENTER LINE OR LANE LINE.)

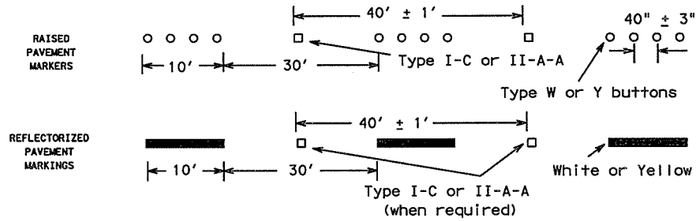

REMOVABLE MARKINGS WITH RAISED PAVEMENT MARKERS

If raised pavement markers are used to supplement REMOVABLE markings, the markers shall be applied to the top of the tape at the approximate mid length of tape used for broken lines or at 20 foot spacing for solid lines. This allows an easier removal of raised pavement markers and tape.

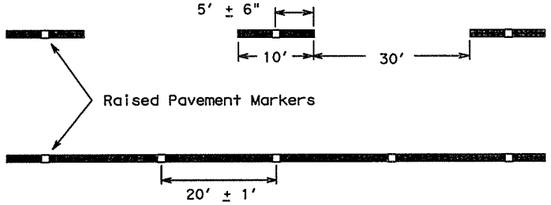

Centerline only - not to be used on edge lines

Raised pavement markers used as standard pavement markings shall be from the approved products list and meet the requirements of Item 672 "RAISED PAVEMENT MARKERS."

Texas Department of Transportation
Traffic Operations Division

BARRICADE AND CONSTRUCTION PAVEMENT MARKING PATTERNS STANDARD

12 of 12 BC(12)-07

© TxDOT February 1998

DN: TXDOT	CK: TXDOT	DW: TXDOT	CK: TXDOT
CONT	SECT	JOB	HIGHWAY
DIST		COUNTY	SHEET NO. 19

REVISIONS
1-97
2-98
11-02
9-07

109C

DATE:
FILE:

DISCLAIMER: The use of this standard is governed by the "Texas Engineering Practice Act". No warranty of any kind is made by TxDOT for any purpose whatsoever. TxDOT assumes no responsibility for the conversion of this standard to other formats or for incorrect results or damages resulting from its use.

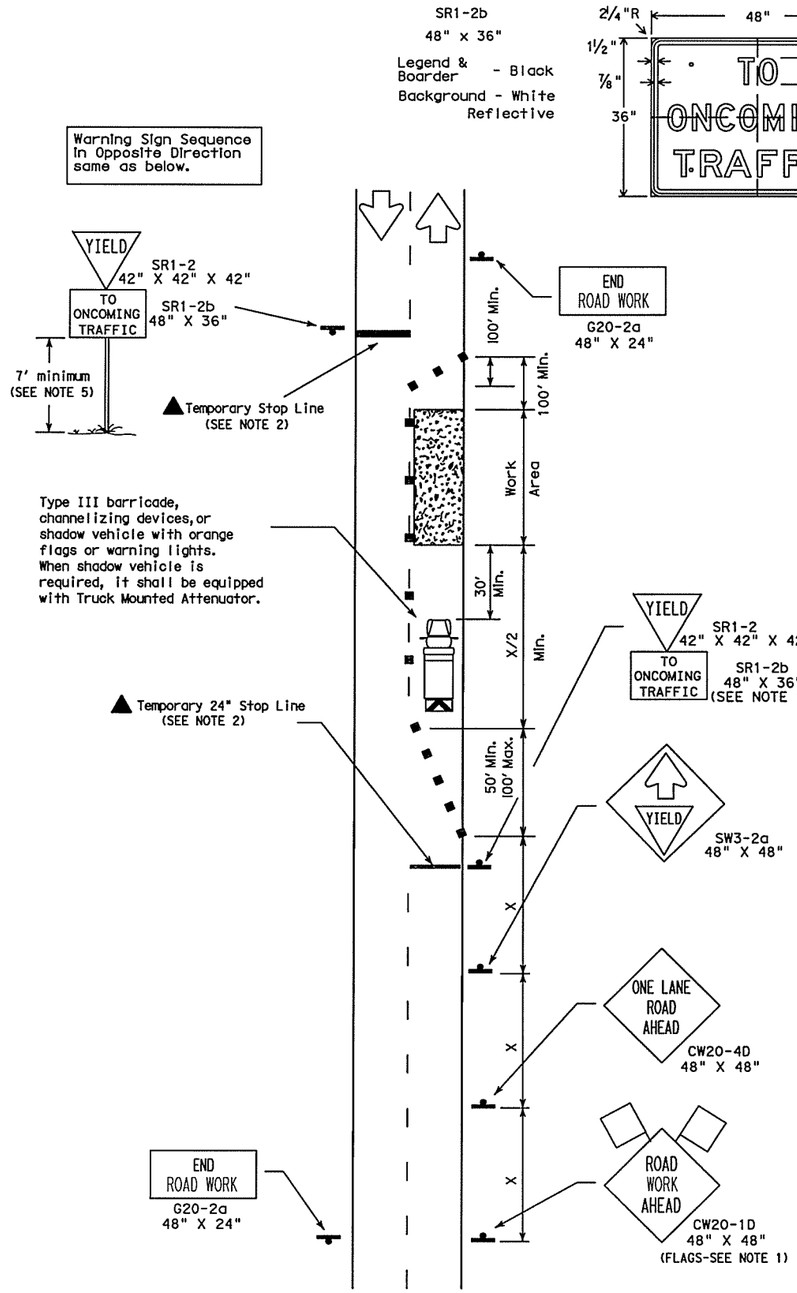

TCP (2-2a)

2-Lane Roadway Without Paved Shoulders
One Lane Closed
Adequate Field of View

The requirement for shadow vehicles will be listed in the project GENERAL NOTES, Item 502, Barricades, Signs and Traffic Handling.

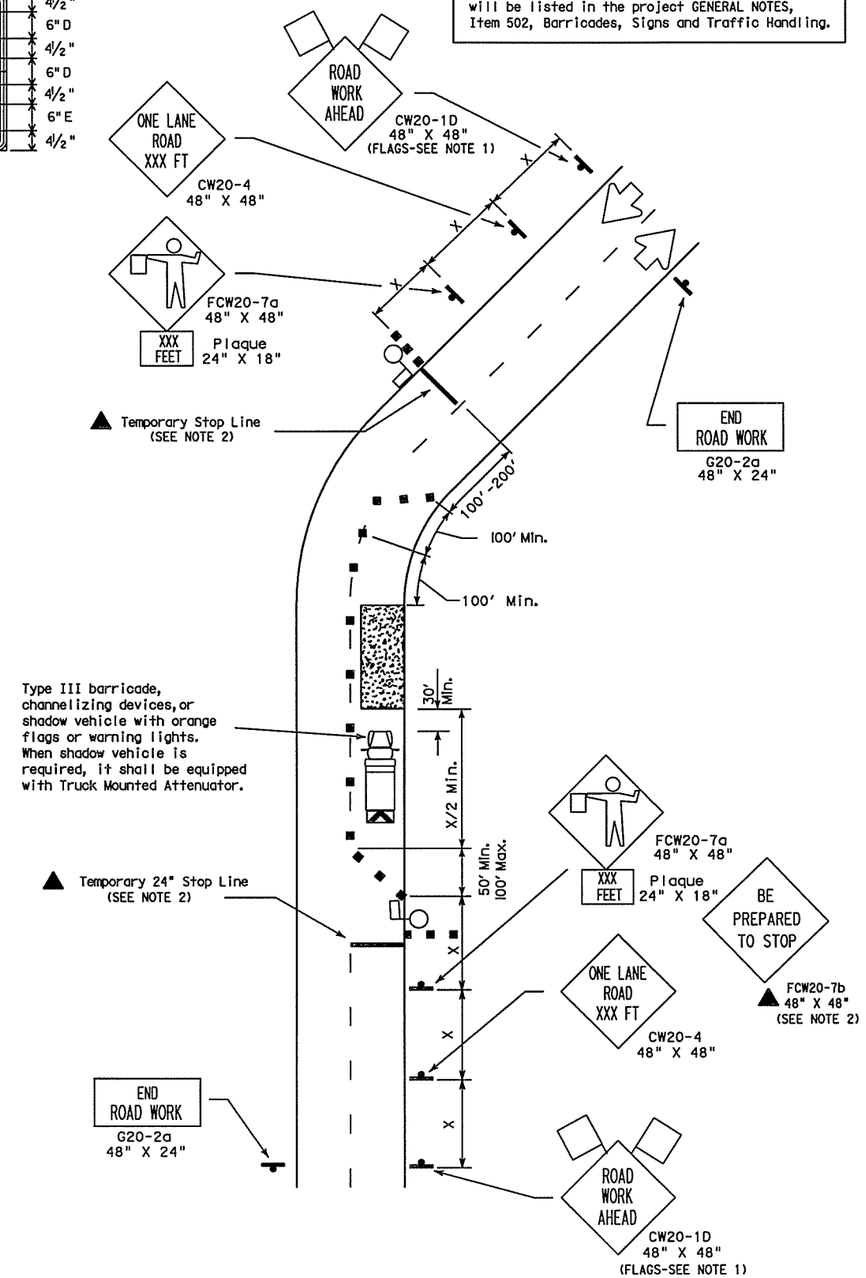

TCP (2-2b)

2-Lane Roadway Without Paved Shoulders
One Lane Closed
Inadequate Field of View

LEGEND

- Type III Barricade
- Channelizing Devices
- Flag
- Heavy Work Vehicle
- Truck Mounted Attenuator
- Trailer Mounted Flashing Arrow Panel
- Portable Changeable Message Sign
- Flagger
- Sign Post

Posted Speed ✳	Formula	Minimum Desirable Taper Lengths ✳✳ 10' Offset	11' Offset	12' Offset	Suggested Maximum Spacing of Device On a Taper	On a Tangent	Minimum Sign Spacing X Distance
30	$L = \frac{WS^2}{60}$	150'	165'	180'	30'	60'-75'	120'
35		205'	225'	245'	35'	70'-90'	160'
40		265'	295'	320'	40'	80'-100'	240'
45	L=WS	450'	495'	540'	45'	90'-110'	320'
50		500'	550'	600'	50'	100'-125'	400'
55		550'	605'	660'	55'	110'-140'	500'
60		600'	660'	720'	60'	120'-150'	✳600'
65		650'	715'	780'	65'	130'-165'	✳700'
70		700'	770'	840'	70'	140'-175'	✳800'

✳ Conventional Roads Only

✳✳ Taper lengths have been rounded off.
L=Length of Taper (FT.) W=Width of Offset (FT.) S=Posted Speed (MPH)

TYPICAL USAGE:				
MOBILE	SHORT DURATION	SHORT TERM STATIONARY	INTERMEDIATE TERM STATIONARY	LONG TERM STATIONARY
	✓	✓	✓	

GENERAL NOTES:

1. Flags attached to signs are REQUIRED.
2. All traffic control devices illustrated are REQUIRED, except those denoted with the triangle symbol may be omitted when stated elsewhere in the plans.
3. The BE PREPARED TO STOP sign may be installed after the ONE LANE ROAD XXX FT sign, but proper sign spacing shall be maintained.
4. YIELD sign traffic control may be used on projects with approaches that have adequate sight distance. For projects in urban areas, work zones should be no longer than one half city block. In rural areas on roadways with less than 4000 ADT and work areas should be no longer than 400'.
5. YIELD TO ONCOMING TRAFFIC sign shall be placed on a support at a 7' minimum mounting height.
6. Flaggers should use two-way radios or other methods of communication to control traffic.
7. Length of work area should be based on the ability of flaggers to communicate.
8. For intermediate term situations, when it is not feasible to remove and restore pavement markings, the channelization must be made dominant by using a very close spacing. This is especially important in locations of conflicting information, such as where traffic is directed over a double yellow centerline. In such locations a maximum channelizing device spacing of 10 feet is recommended. The 10 foot channelizing device spacing recommendation is intended for the area of conflicting information and not the entire work zone.

Texas Department of Transportation
Traffic Operations Division

TRAFFIC CONTROL PLAN

TCP (2-2)-03

© TxDOT December 1985

DN: TXDOT	CK: TXDOT	DW: TXDOT	CK: TXDOT
CONT	SECT	JOB	HIGHWAY
DIST		COUNTY	SHEET NO. 20

REVISIONS
8-95
1-97
4-98
3-03

DATE:
FILE:

DISCLAIMER: The use of this standard is governed by the "Texas Engineering Practice Act". No warranty of any kind is made by TxDOT for any purpose whatsoever. TxDOT assumes no responsibility for the conversion of this standard to other formats or for incorrect results or damages resulting from its use.

CHANNELIZING DEVICES FOR URBAN ROADWAY TYPE PROJECT

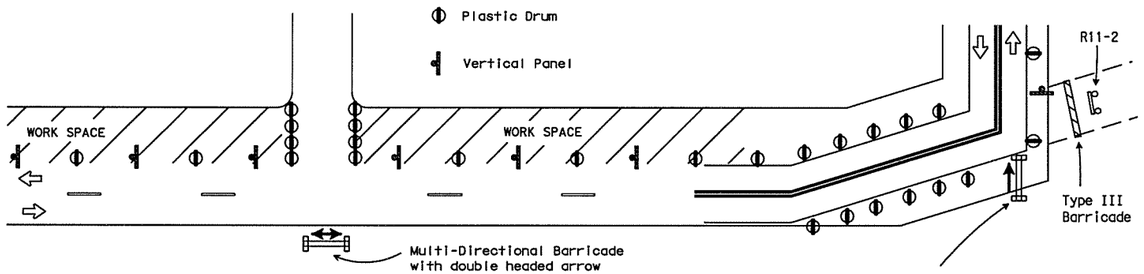

For spacing between devices, see BC(8). Use self-righting supports in areas where there is a high potential for channelizing devices to be struck.

MULTI-DIRECTIONAL BARRICADE

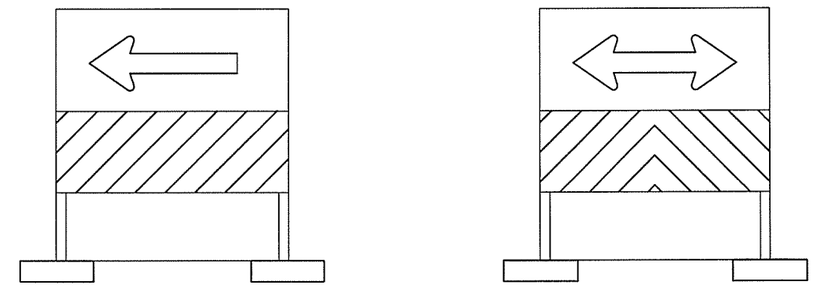

1. Multi-directional barricade shall not be used for lane closures.
2. May be used for sharp changes in alignment, or across roadway from stem of "T" intersection.
3. Typically used for Intermediate Term Stationary, Short Term Stationary or Short Duration work zone operations.
4. See the CWZTCD List for approved designs.

BARRIER DELINEATION WITH SAFETY GLARE FENCE

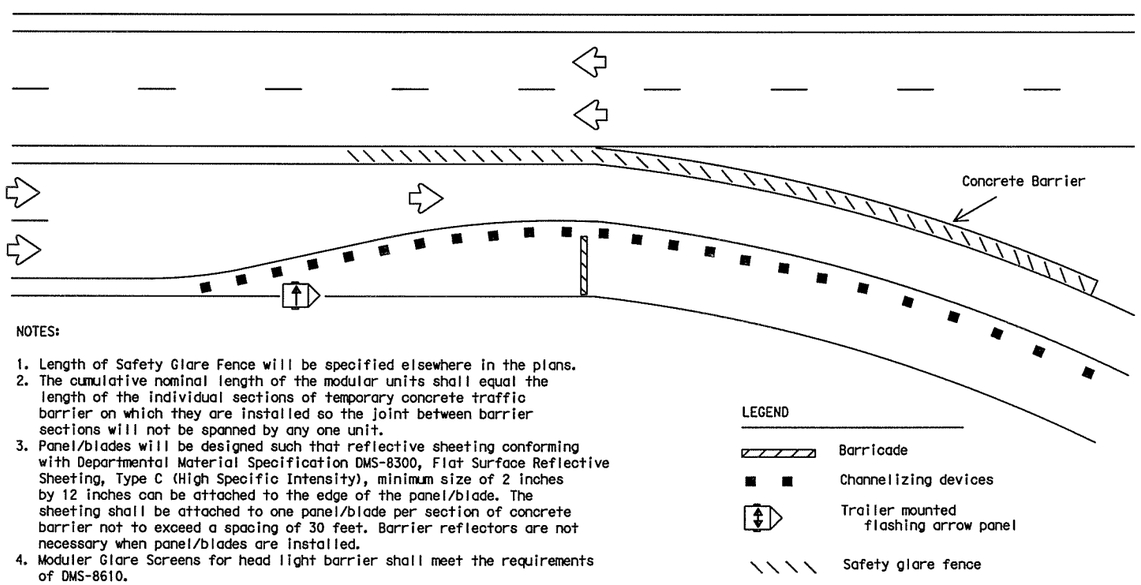

NOTES:

1. Length of Safety Glare Fence will be specified elsewhere in the plans.
2. The cumulative nominal length of the modular units shall equal the length of the individual sections of temporary concrete traffic barrier on which they are installed so the joint between barrier sections will not be spanned by any one unit.
3. Panel/blades will be designed such that reflective sheeting conforming with Departmental Material Specification DMS-8300, Flat Surface Reflective Sheeting, Type C (High Specific Intensity), minimum size of 2 inches by 12 inches can be attached to the edge of the panel/blade. The sheeting shall be attached to one panel/blade per section of concrete barrier not to exceed a spacing of 30 feet. Barrier reflectors are not necessary when panel/blades are installed.
4. Modular Glare Screens for head light barrier shall meet the requirements of DMS-8610.

USAGE OF CW1-6, ECW1-6a AND CW1-8 SIGNS

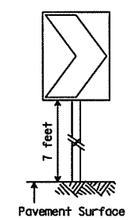

CW1-8

The CHEVRON sign (CW1-8) may be used to replace roadside delineation on curves or used in transitions or tapers.

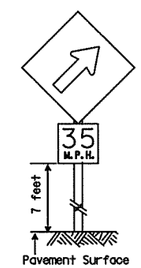

ECW1-6a

An UPWARD SLOPING ARROW sign (ECW1-6a) is intended to be used to indicate the beginning of a curve or transition. It should be preceded with an appropriate curve sign when needed, and should not be used throughout the curve or transition. Advisory speed plaque is optional.

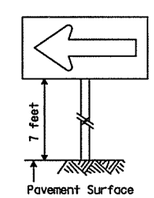

CW1-6

A LARGE ARROW sign (CW1-6) is intended to be used to give notice of a sharp change in alignment (turn) in the direction of travel. It should be preceded with an appropriate advance construction warning turn sign.

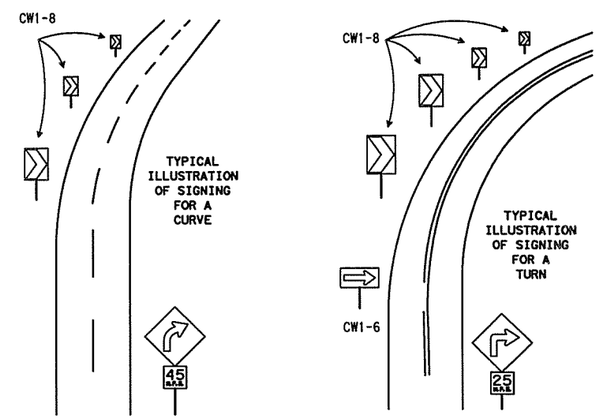

NOTES:

1. CW1-6, ECW1-6a & CW1-8 signs shall be mounted on fixed supports.
2. Chevrons, when used, shall be erected on the outside of a sharp curve or turn, or on the far side of an intersection. They shall be in line with and at right angles to approaching traffic. Spacing should be such that the motorist always has three in view, until the change in alignment eliminates its need.
3. For two-way traffic, use same arrangement of signs on outside of curve for each direction of travel.
4. Appropriate advance warning CURVE or TURN sign with Advisory Speed plaque should be used when needed.

Only pre-qualified products shall be used. A copy of the "Compliant Work Zone Traffic Control Devices List" (CWZTCD) describes pre-qualified products and their sources and may be obtained by contacting:

Standards Engineer
Traffic Operations Division - TE
Texas Department of Transportation
125 East 11th Street
Austin, Texas 78701-2483
Phone (512) 416-3120
Fax (512) 416-3299

Instructions to locate the "CWZTCD" on TxDOT website are:

Start at website - www.dot.state.tx.us
Click on "About TxDOT",
Click on "Organizational Chart",
Click on Traffic Operations Box,
Click on "Compliant Work Zone Traffic Control Devices",
Click on "View PDF".
This site is printable.

PREQUALIFICATION PROCEDURES ARE OBTAINED FROM:

CONSTRUCTION DIVISION-MATERIALS AND TESTS SECTION
TEXAS DEPARTMENT OF TRANSPORTATION (TxDOT)
125 EAST 11th STREET
AUSTIN, TX 78701-2483

DEPARTMENTAL MATERIAL SPECIFICATIONS

FLAT SURFACE REFLECTIVE SHEETING	DMS-8300
DELINEATORS AND OBJECT MARKERS	DMS-8600
MODULER GLARE SCREENS	DMS-8610

COLOR	USAGE	SIGN SHEETING
ORANGE	BACKGROUND	TYPE E (FLUORESCENT PRISMATIC)
WHITE	BACKGROUND	TYPE C (HIGH SPECIFIC INTENSITY)
BLACK	LEGEND & BORDERS	VINYL NON-REFLECTIVE SHEETING

REFER TO THE BC SHEETS FOR SHEETING REQUIREMENT ON CHANNELIZING DEVICES.

The five categories of work duration and their time at a location shall be:

A. Long-term stationary is work that occupies a location more than 3 days.

B. Intermediate-term stationary is work that occupies a location more than one daylight period up to 3 days, or nighttime work lasting more than 1 hour.

C. Short-term stationary is daytime work that occupies a location for more than 1 hour, but less than 12 hours.

D. Short duration is work that occupies a location up to 1 hour.

E. Mobile is work that moves intermittently or continuously.

Texas Department of Transportation
Traffic Operations Division

TRAFFIC CONTROL PLAN TYPICAL DETAILS

WZ(TD)-03

© TxDOT February 1998

REVISIONS	DN: TXDOT	CK: TXDOT	DW: TXDOT	CK: TXDOT
4-98	CONT	SECT	JOB	HIGHWAY
3-03	DIST	COUNTY		SHEET NO. 21

DATE:
FILE:

DISCLAIMER: The use of this standard is governed by the "Texas Engineering Practice Act". No warranty of any kind is made by TxDOT for any purpose whatsoever. TxDOT assumes no responsibility for the conversion of this standard to other formats or for incorrect results or damages resulting from its use.

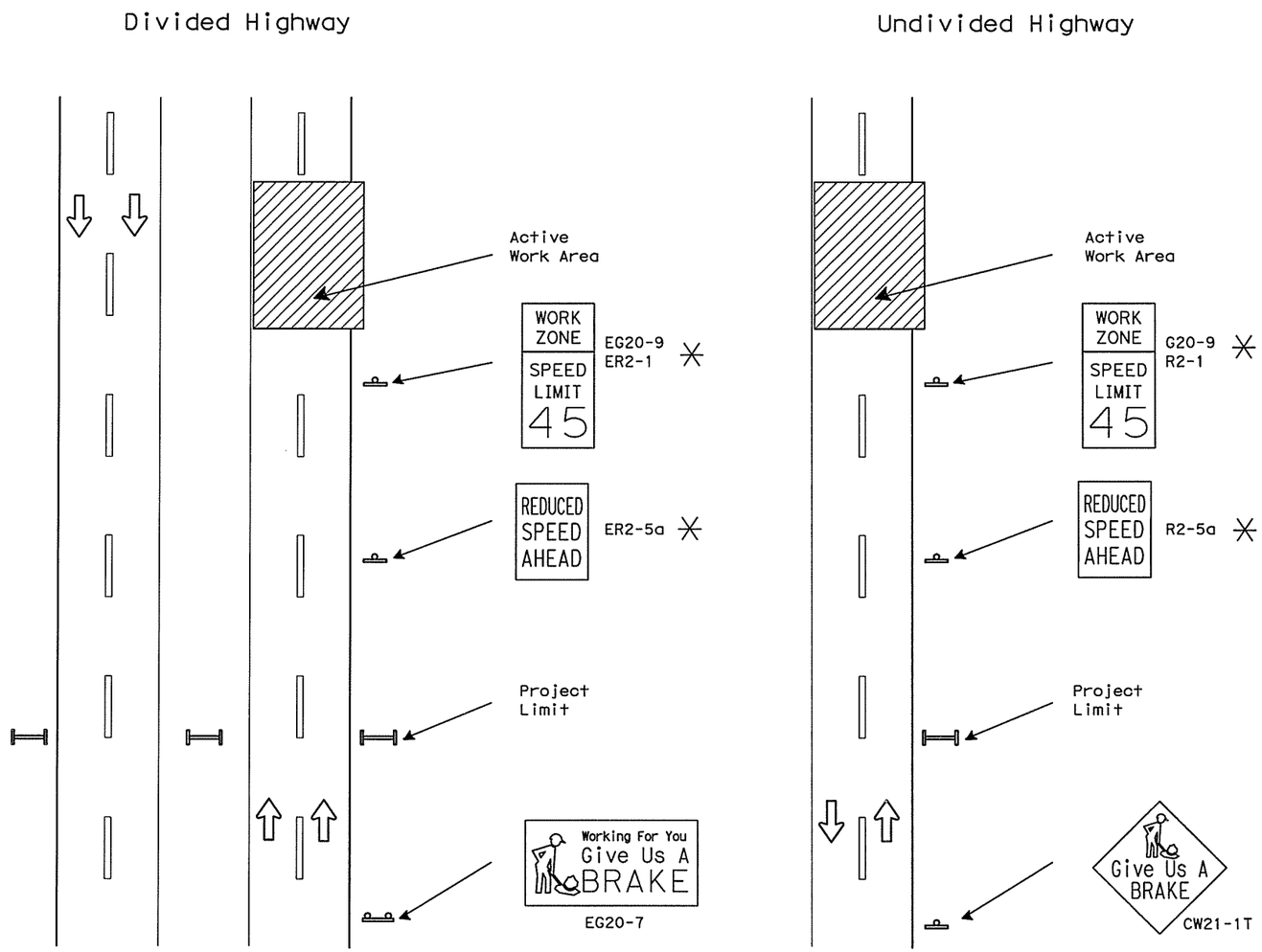

SIGNS ARE SHOWN FOR ONE DIRECTION OF TRAVEL

✳ Posted only when reduced speed is directed by the Engineer

SUMMARY OF LARGE SIGNS

BACKGROUND COLOR	SIGN DESIGNATION	SIGN TEXT	SIGN DIMENSIONS	REFLECTIVE SHEETING	PLY TY A (SQ FT)	GALVANIZED STRUCT STEEL			DRILLED SHAFT 24" DIA. (LF)
						Size	(LF) ①	(LF) ②	
Orange	EG20-7	Give Us A BRAKE	16' x 8'	Type E	128	W8x18	16	17	12
Orange	G20-7	Give Us A BRAKE	8' x 4'	Type E	32	S4x7.7	12	13	7✳

✳ 12" Non-reinforced Concrete Footing (LF)

SUMMARY OF SMALL SIGNS

BACKGROUND COLOR	SIGN DESIGNATION	SIGN TEXT	SIGN DIMENSIONS	REFLECTIVE SHEETING	PLY TY A (SQ FT)
Orange	EG20-9	WORK ZONE	36" x 24"	Type E	6
Orange	G20-9	WORK ZONE	24" x 18"	Type E	3
White	ER2-1	SPEED LIMIT	36" x 48"	Type C	12
White	ER2-5a	REDUCED SPEED AHEAD	36" x 48"	Type C	12
Orange	CW21-1T	GIVE US A BRAKE	48" x 48"	Type E	16

DEPARTMENTAL MATERIAL SPECIFICATIONS

PLYWOOD SIGN BLANKS	DMS-7100
ALUMINUM SIGN BLANKS	DMS-7110
FLAT SURFACE REFLECTIVE SHEETING	DMS-8300
VINYL NON-REFLECTIVE SHEETING	DMS-8320

COLOR	USAGE	SHEETING MATERIAL
WHITE	BACKBROUND	TYPE C (HIGH SPECIFIC INTENSITY)
ORANGE	BACKGROUND	TYPE E (FLUORESCENT PRISMATIC)
BLACK	LEGEND & BORDERS	VINYL NON-REFLECTIVE SHEETING

GENERAL NOTES:

1. See BC and SMD sheets for additional sign support details.
2. Sign locations shall be approved by the Engineer.
3. For projects more than two miles in length, Give Us a BRAKE and WORK ZONE SPEED LIMIT signs should be repeated halfway through the project.
4. The WORK ZONE (G20-9) sign is to be installed in combination with a SPEED LIMIT (R2-1) sign.
5. Speed limits shall be regulatory and approved by the Transportation Commission.
6. EG20-9, G20-9, ER2-1, R2-1, ER2-5a, R2-5a and CW21-1T signs and supports shall be considered subsidiary to Item 502, "Barricades, Signs and Traffic Handling."
7. G20-7 and EG20-7 signs shall be paid for under the following bid items:
   Item 634 Plywood Signs Type A
   Item 647 Large Roadside Sign Supports
   Item 656 Foundations for Signs, Traffic Signals and Roadway Ill. Assem.
8. All signs shall be constructed in accordance with the details found in the "Standard Highway Sign Designs for Texas," latest edition. Sign details not shown in this manual shall be shown in the plans or the Engineer shall provide a detail to the Contractor before the sign is manufactured.

Texas Department of Transportation
Traffic Operations Division

WORK ZONE "GIVE US A BRAKE" SIGNS

WZ(BRK)-03

©TxDOT August 1995

DN: TXDOT	CK: TXDOT	DW: TXDOT	CK: TXDOT
CONT	SECT	JOB	HIGHWAY
DIST	COUNTY		SHEET NO. 22

REVISIONS
6-96
8-96
5-98
3-03

DATE:
FILE:

Beginning chain MEMORIAL description

Point MEMORIAL01 N 13,616,450.3429 E 2,134,508.2915 Sta 10+00.00

Course from MEMORIAL01 to MEMORIAL02 N 83° 20′ 04.78″ E Dist 310.0132

Point MEMORIAL02 N 13,616,486.3261 E 2,134,816.2094 Sta 13+10.01

Course from MEMORIAL02 to PC MEMORIAL-01 N 82° 14′ 56.14″ E Dist 652.4617

Curve Data

Curve MEMORIAL-01

P.I. Station		19+84.31	N	13,616,577.3695	E 2,135,484.3359
Delta	=	8° 19′ 38.76″ (LT)			
Degree	=	19° 05′ 54.94″			
Tangent	=	21.8396			
Length	=	43.6023			
Radius	=	300.0000			
External	=	0.7939			
Long Chord	=	43.5640			
Mid. Ord.	=	0.7918			
P.C. Station		19+62.47	N	13,616,574.3233	E 2,135,462.7098
P.T. Station		20+06.08	N	13,616,583.5157	E 2,135,505.2928
C.C.			N	13,616,871.3907	E 2,135,420.8654
Back	= N	81° 58′ 55.84″ E			
Ahead	= N	73° 39′ 17.08″ E			
Chord Bear	= N	77° 49′ 06.46″ E			

Course from PT MEMORIAL-01 to PC MEMORIAL-02 N 73° 39′ 17.08″ E Dist 923.5783

Curve Data

Curve MEMORIAL-02

P.I. Station		29+93.50	N	13,616,861.4018	E 2,136,452.8103
Delta	=	24° 01′ 46.07″ (LT)			
Degree	=	19° 05′ 54.94″			
Tangent	=	63.8476			
Length	=	125.8180			
Radius	=	300.0000			
External	=	6.7190			
Long Chord	=	124.8979			
Mid. Ord.	=	6.5718			
P.C. Station		29+29.66	N	13,616,843.4335	E 2,136,391.5432
P.T. Station		30+55.47	N	13,616,902.7612	E 2,136,501.4509
C.C.			N	13,617,131.3085	E 2,136,307.1157
Back	= N	73° 39′ 17.08″ E			
Ahead	= N	49° 37′ 31.01″ E			
Chord Bear	= N	61° 38′ 24.04″ E			

Course from PT MEMORIAL-02 to MEMORIAL06 N 49° 37′ 31.01″ E Dist 1,105.4182

Point MEMORIAL06 N 13,617,618.8332 E 2,137,343.5852 Sta 41+60.89

Ending chain MEMORIAL description

Beginning chain POCOHONTAS description

Point POC002 N 13,616,682.6410 E 2,136,198.6186 Sta 9+00.00

Course from POC002 to POC001 N 16° 20′ 42.92″ W Dist 100.0000

Point POC001 N 13,616,778.5993 E 2,136,170.4761 Sta 10+00.00

Ending chain POCOHONTAS description

Reginald Fountain, P.E.
10/30/09

STATE OF TEXAS
REGINALD FOUNTAIN
97328
LICENSED
PROFESSIONAL ENGINEER

NO.	REVISION	BY	DATE

CP&Y
TBPE FIRM REGISTRATION NO: 1741

BEXAR COUNTY
PUBLIC WORKS DIVISION

HIGHLAND OAKS SUBDIVISION–MEMORIAL LANE

HORIZONTAL DATA SHEET

SHEET 1 OF 1

Designed: RTF	STATE	BEXAR COUNTY FILE NUMBER	PLAN SET NO.
Checked: JA	TEXAS		23
Drawn: RTF	COUNTY		OF
Checked: JA	BEXAR		62

C:\PWWorking\ygonzales\d0101294\B047HORIZ01.S99
10/29/2009 7:06:27 PM

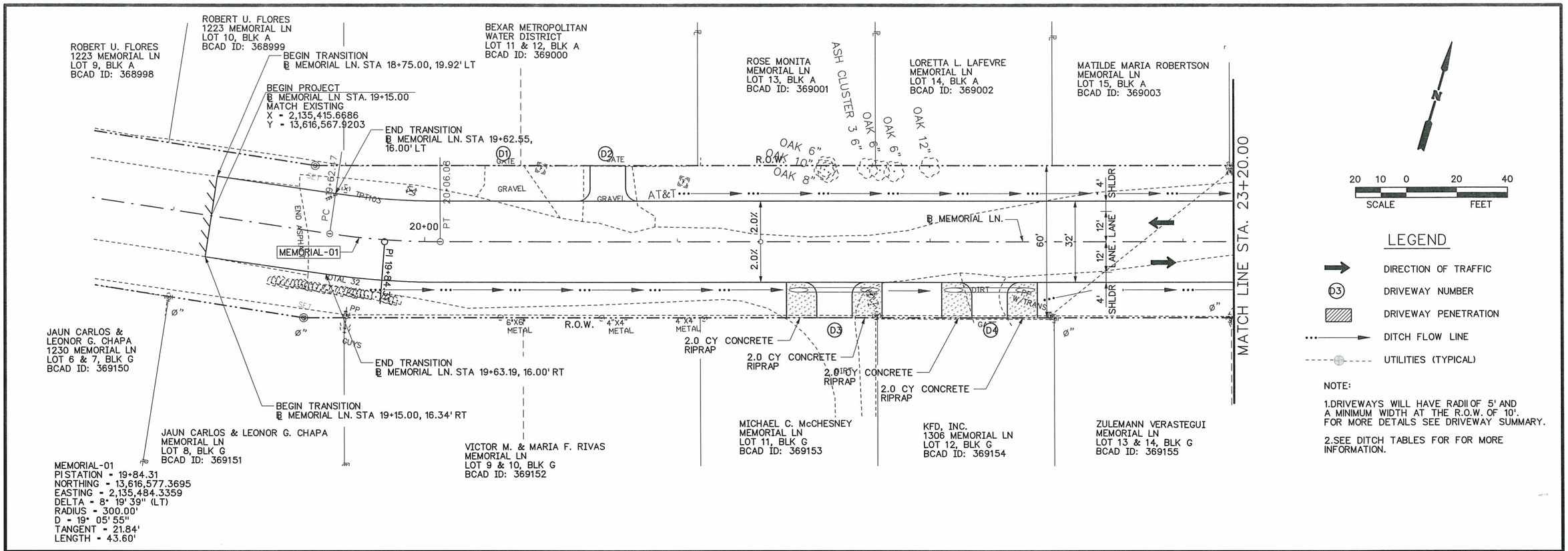

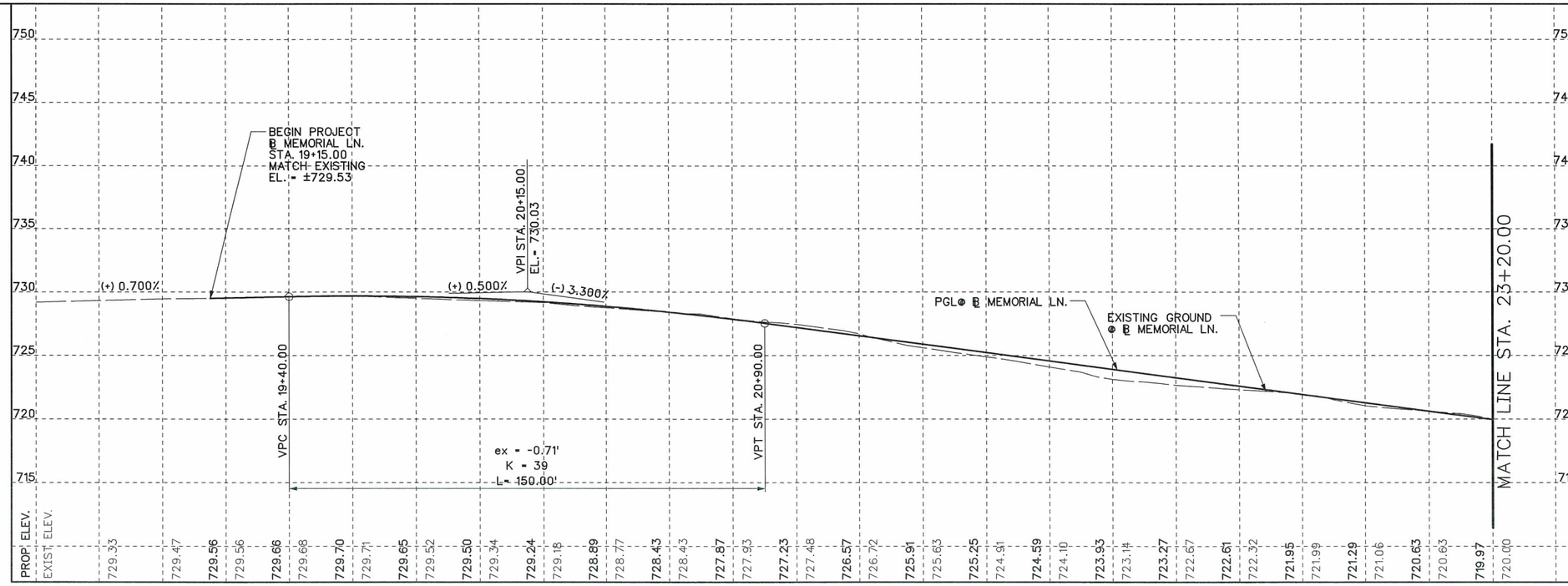

Reginald Fountain, P.E.
10/11/10

STATE OF TEXAS
REGINALD FOUNTAIN
97328
LICENSED
PROFESSIONAL ENGINEER

NO.	REVISION	BY	DATE

CP&Y
TBPE FIRM REGISTRATION NO: 1741

BEXAR COUNTY
PUBLIC WORKS DIVISION

HIGHLAND OAKS SUBDIVISION–MEMORIAL LANE

ROADWAY PLAN AND PROFILE

BEGIN PROJECT TO STA. 23+20.00

SHEET 1 OF 5

Designed: RTF	STATE	BEXAR COUNTY FILE NUMBER	PLAN SET NO.
Checked: JA	TEXAS		
Drawn: RTF	COUNTY		OF
Checked: JA	BEXAR		

c:\pwworking\rfountain\d0101294\8047PP01.040
10/11/2010
12:42:14 PM

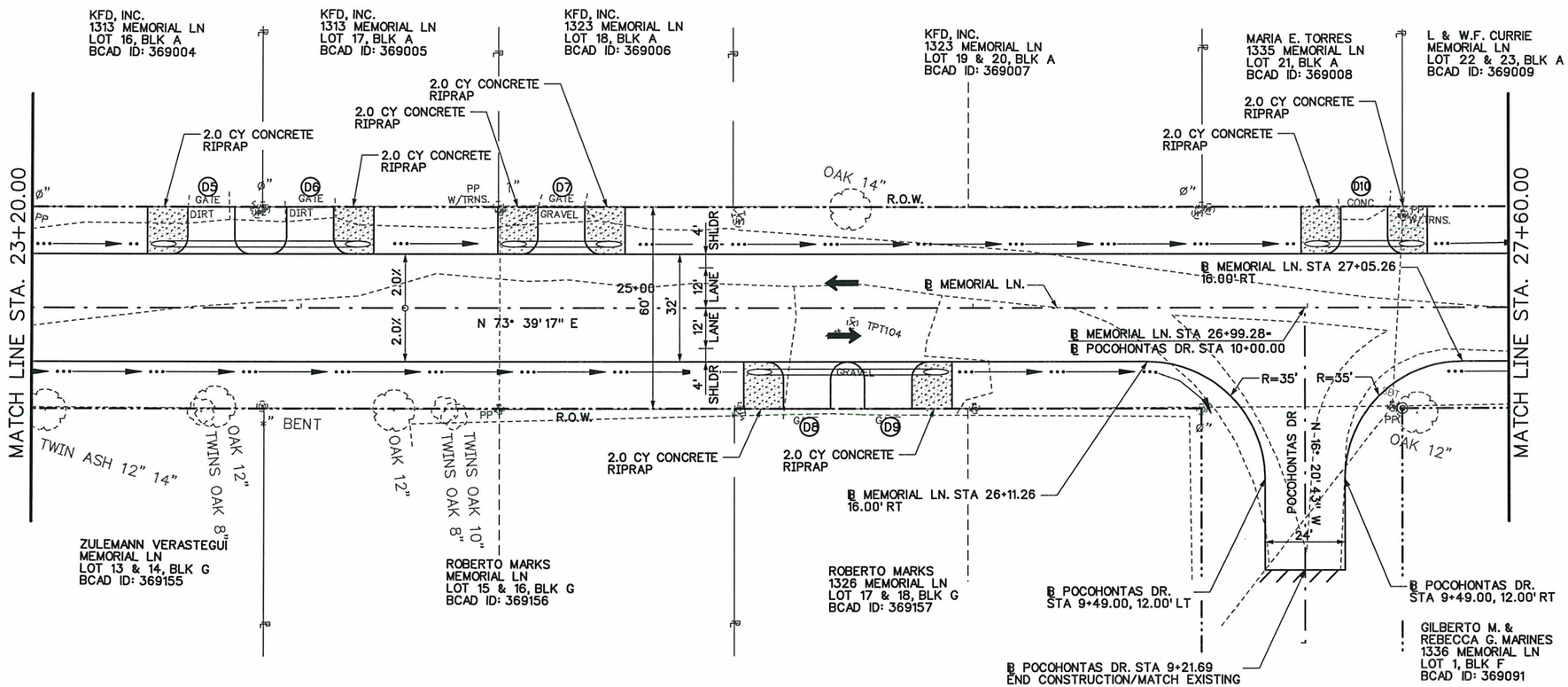

LEGEND

- DIRECTION OF TRAFFIC
- (D3) DRIVEWAY NUMBER
- DRIVEWAY PENETRATION
- DITCH FLOW LINE
- UTILITIES (TYPICAL)

NOTE:

1. DRIVEWAYS WILL HAVE RADII OF 5' AND A MINIMUM WIDTH AT THE R.O.W. OF 10'. FOR MORE DETAILS SEE DRIVEWAY SUMMARY.
2. SEE DITCH TABLES FOR FOR MORE INFORMATION.

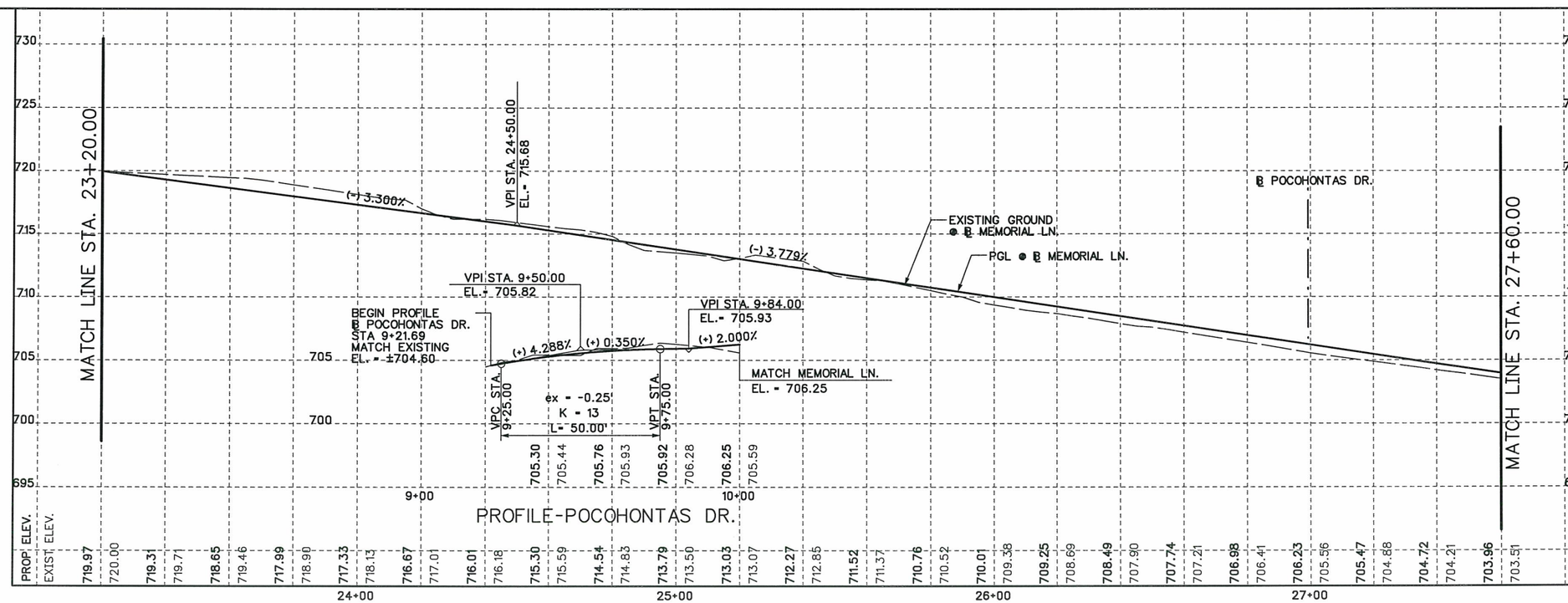

20 10 0 20 40
SCALE FEET

HORIZONTAL
5 2.5 0 5 10
SCALE FEET

VERTICAL

Reginald Fountain, P.E. 10/30/09

STATE OF TEXAS
REGINALD FOUNTAIN
97328
LICENSED
PROFESSIONAL ENGINEER

NO.	REVISION	BY	DATE

CP&Y
TBPE FIRM REGISTRATION NO: 1741

BEXAR COUNTY
PUBLIC WORKS DIVISION

HIGHLAND OAKS SUBDIVISION–MEMORIAL LANE

ROADWAY PLAN AND PROFILE

STA. 23+20.00 TO STA. 27+60.00

SHEET 2 OF 5

Designed: RTF	STATE	BEXAR COUNTY FILE NUMBER	PLAN SET NO. 28
Checked: JA	TEXAS		
Drawn: RTF	COUNTY		OF
Checked: JA	BEXAR		62

C:\PWWorking\rgonzales\d0101294\8047PP02.dgn
10/29/2009
7:06:57 PM

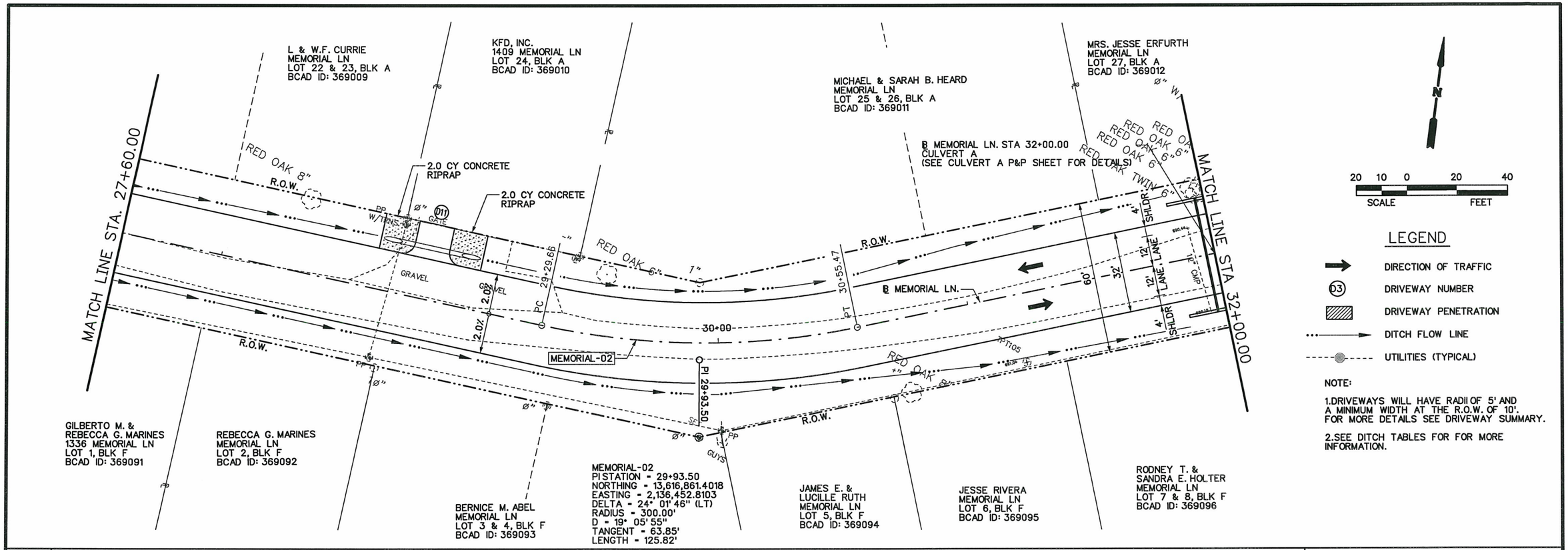

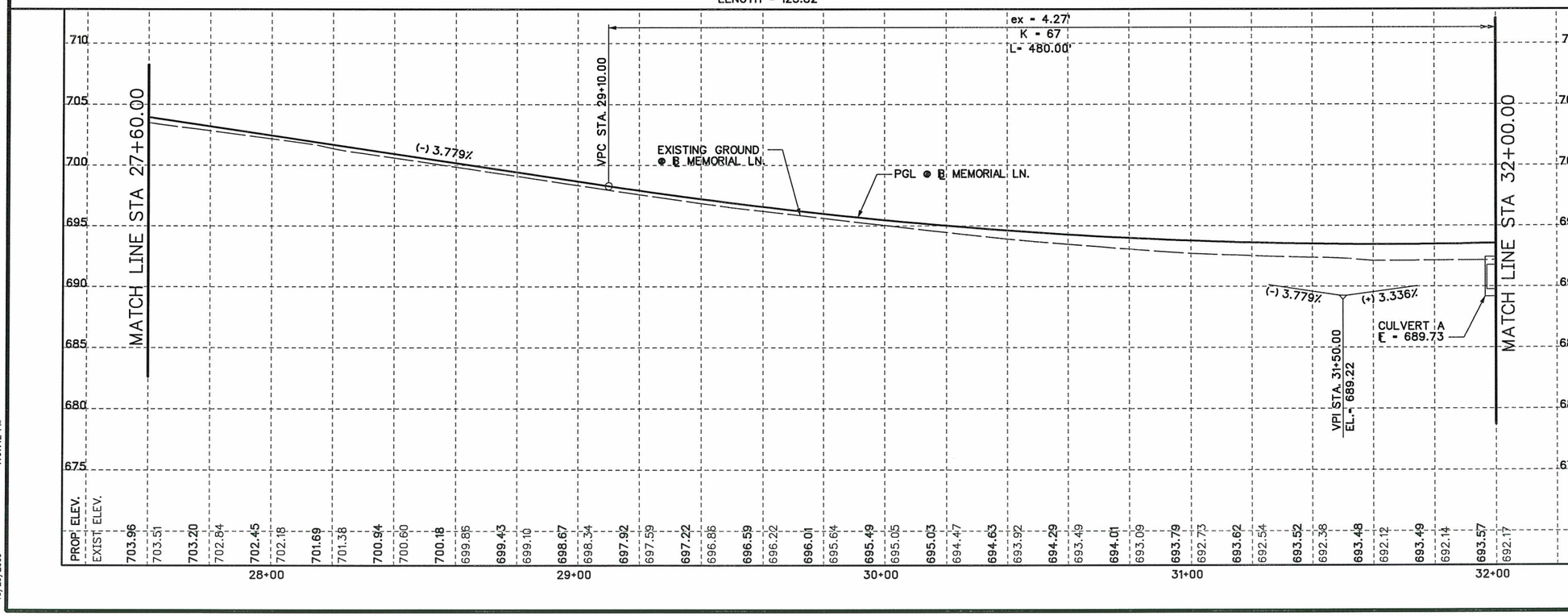

20 10 0 20 40
SCALE FEET

HORIZONTAL

5 2.5 0 5 10
SCALE FEET

VERTICAL

Reginald Fountain, P.E.
10/30/09

STATE OF TEXAS
REGINALD FOUNTAIN
97328
LICENSED
PROFESSIONAL ENGINEER

NO.	REVISION	BY	DATE

CP&Y
TBPE FIRM REGISTRATION NO: 1741

BEXAR COUNTY
PUBLIC WORKS DIVISION

HIGHLAND OAKS SUBDIVISION–MEMORIAL LANE

ROADWAY PLAN AND PROFILE

STA. 27+60.00 TO STA. 32+00.00

SHEET 3 OF 5

Designed: RTF	STATE	BEXAR COUNTY FILE NUMBER	PLAN SET NO.
Checked: JA	TEXAS		26
Drawn: RTF	COUNTY		OF
Checked: JA	BEXAR		62

C:\PWWorking\rgonzales\d0101294\8047PP03.040
10/29/2009
7:07:12 PM

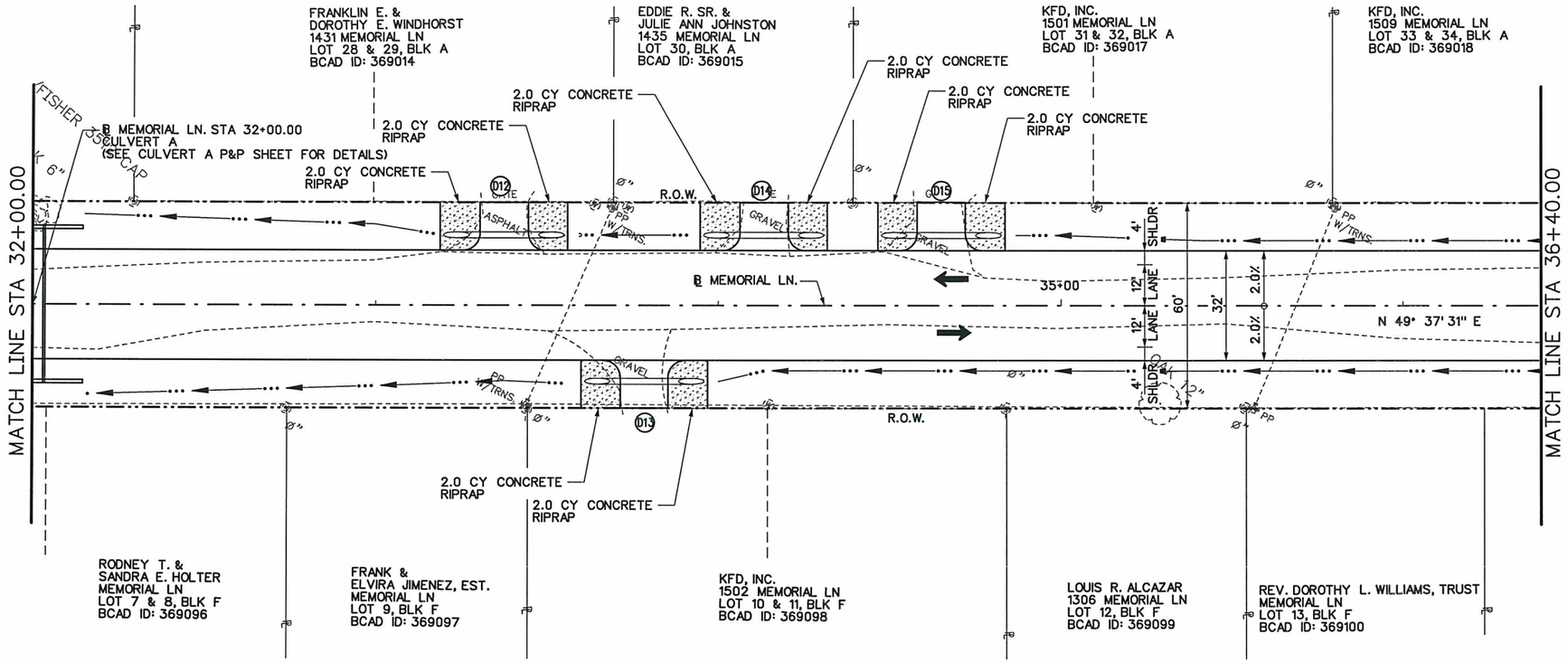

N

20 10 0 20 40
SCALE FEET

LEGEND

- DIRECTION OF TRAFFIC
- (D3) DRIVEWAY NUMBER
- DRIVEWAY PENETRATION
- DITCH FLOW LINE
- UTILITIES (TYPICAL)

NOTE:

1. DRIVEWAYS WILL HAVE RADII OF 5' AND A MINIMUM WIDTH AT THE R.O.W. OF 10'. FOR MORE DETAILS SEE DRIVEWAY SUMMARY.
2. SEE DITCH TABLES FOR FOR MORE INFORMATION.

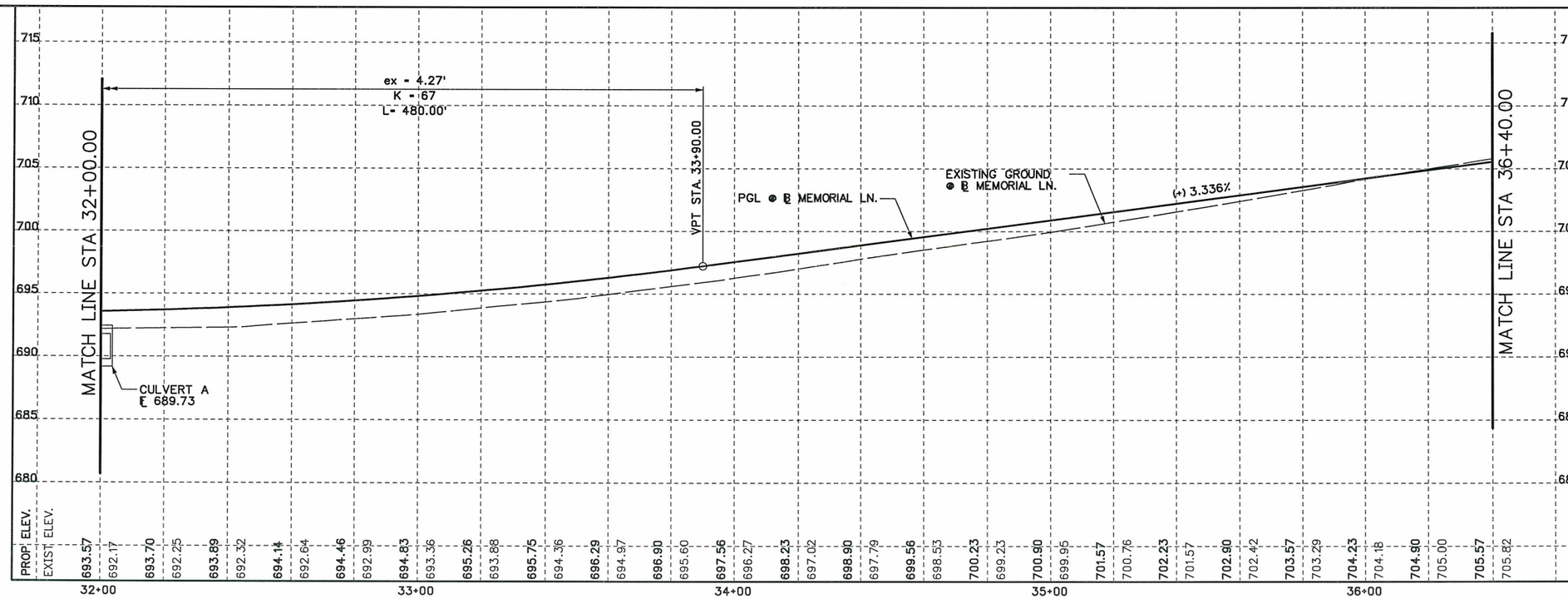

20 10 0 20 40
SCALE FEET
HORIZONTAL

5 2.5 0 5 10
SCALE FEET
VERTICAL

Reginald Fountain, P.E.
10/30/09

STATE OF TEXAS
REGINALD FOUNTAIN
97328
LICENSED
PROFESSIONAL ENGINEER

NO.	REVISION	BY	DATE

CP&Y
TBPE FIRM REGISTRATION NO: 1741

BEXAR COUNTY
PUBLIC WORKS DIVISION

HIGHLAND OAKS SUBDIVISION–MEMORIAL LANE

ROADWAY PLAN AND PROFILE

STA. 32+00.00 TO STA. 36+40.00

SHEET 4 OF 5

Designed: RTF	STATE	BEXAR COUNTY FILE NUMBER	PLAN SET NO.
Checked: JA	TEXAS		27
Drawn: RTF	COUNTY		OF
Checked: JA	BEXAR		62

C:\PWWorking\rgonzales\d0101294\B0472P04.040
10/29/2009
7:07:28 PM

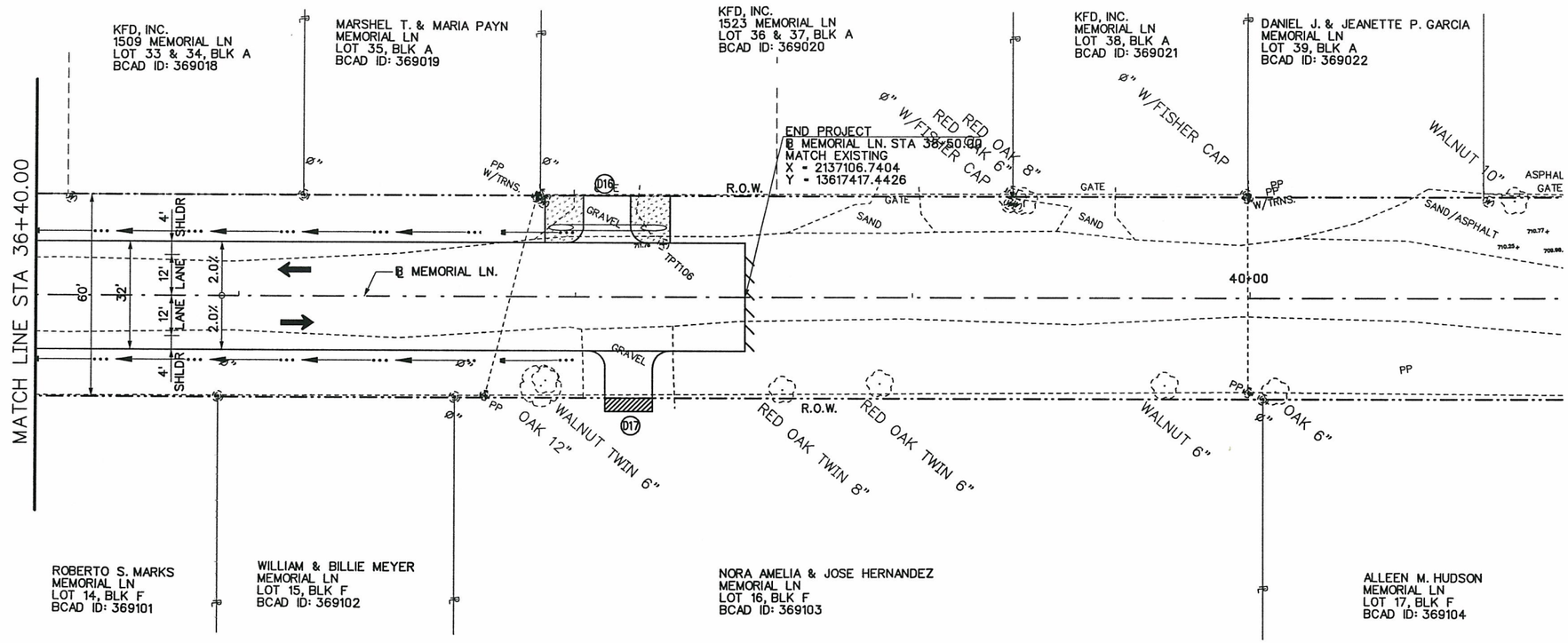

N

20 10 0 20 40
SCALE FEET

LEGEND

- DIRECTION OF TRAFFIC
- (D3) DRIVEWAY NUMBER
- DRIVEWAY PENETRATION
- DITCH FLOW LINE
- UTILITIES (TYPICAL)

NOTE:

1. DRIVEWAYS WILL HAVE RADII OF 5' AND A MINIMUM WIDTH AT THE R.O.W. OF 10'. FOR MORE DETAILS SEE DRIVEWAY SUMMARY.
2. SEE DITCH TABLES FOR FOR MORE INFORMATION.

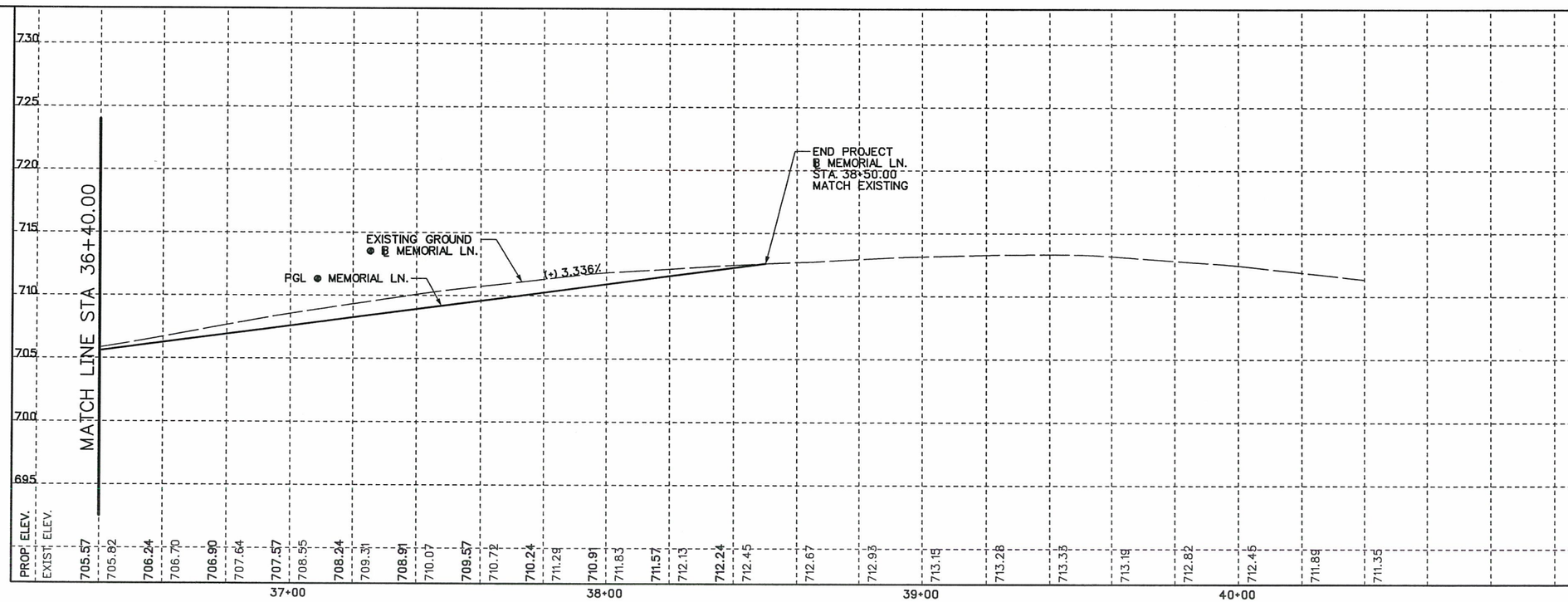

20 10 0 20 40
SCALE FEET

HORIZONTAL

5 2.5 0 5 10
SCALE FEET

VERTICAL

Reginald Fountain P.E.
10/11/10

STATE OF TEXAS
REGINALD FOUNTAIN
97328
LICENSED
PROFESSIONAL ENGINEER

NO.	REVISION	BY	DATE

CP&Y

TBPE FIRM REGISTRATION NO: 1741

BEXAR COUNTY
PUBLIC WORKS DIVISION

HIGHLAND OAKS SUBDIVISION–MEMORIAL LANE

ROADWAY PLAN AND PROFILE

STA. 36+40.00 TO END PROJECT

SHEET 5 OF 5

Designed: RTF	STATE	BEXAR COUNTY FILE NUMBER	PLAN SET NO.
Checked: JA	TEXAS		
Drawn: RTF	COUNTY		OF
Checked: JA	BEXAR		

c:\pwworking\rfountain\d0101294\8047PP05.040
10/11/2010
1:16:50 PM

DRIVEWAY SUMMARY

DRIVEWAY NUMBER	℄ STATION	LT/RT	PROP WIDTH AT R.O.W.	PROP WIDTH AT E.O.P.	PROP LENGTH	DRIVEWAY PENETRATION	503.6 TWO COURSE SURFACE TRT DRIVEWAYS	PIPE SIZE	PIPE LENGTH	UPSTREAM ELEVATION	DOWNSTREAM ELEVATION	O/S FROM ℄
			(FT)	(FT)	(FT)	(FT)	(SY)		(FT)			(FT)
1	20+31.60	LT	14.0	24.0	14.0	0.0	23.0					
2	20+72.69	LT	14.0	24.0	14.0	0.0	23.0					
3	21+61.98	RT	14.0	24.0	14.0	0.0	23.0	21″ X 15″	35.83	723.83	722.13	19.0
4	22+23.47	RT	14.0	24.0	14.0	0.0	23.0	21″ X 15″	35.83	722.24	719.86	19.0
5	23+73.22	LT	14.0	24.0	14.0	0.0	23.0	21″ X 15″	65.24	717.07	714.96	19.0
6	24+02.62	LT	14.0	24.0	14.0	0.0	23.0	21″ X 15″				19.0
7	24+77.46	LT	14.0	24.0	14.0	0.0	23.0	21″ X 15″	35.83	713.37	712.57	19.0
8	25+50.76	RT	14.0	24.0	14.0	0.0	23.0	21″ X 15″	59.87	710.66	708.35	19.0
9	25+74.79	RT	14.0	24.0	14.0	0.0	23.0	21″ X 15″	35.83			19.0
10	27+17.15	LT	14.0	24.0	14.0	0.0	23.0	21″ X 15″	35.83	704.96	702.50	19.0
11	28+80.72	LT	14.0	24.0	14.0	0.0	23.0	21″ X 15″	39.13	698.32	696.84	20.5
12	33+37.30	LT	14.0	24.0	14.0	0.0	23.0	21″ X 15″	35.02	693.55	692.85	20.5
13	33+78.35	RT	14.0	24.0	14.0	0.0	23.0	21″ X 15″	35.00	694.80	694.32	22.1
14	34+13.19	LT	14.0	24.0	14.0	0.0	23.0	21″ X 15″	35.02	696.03	695.71	20.5
15	34+65.13	LT	14.0	24.0	14.0	0.0	23.0	21″ X 15″	35.02	698.02	697.70	20.5
16	38+09.37	LT	14.0	24.0	14.0	0.0	23.0	21″ X 15″	35.02			20.5
17	38+15.85	RT	14.0	24.0	14.0	4.0	31.0					

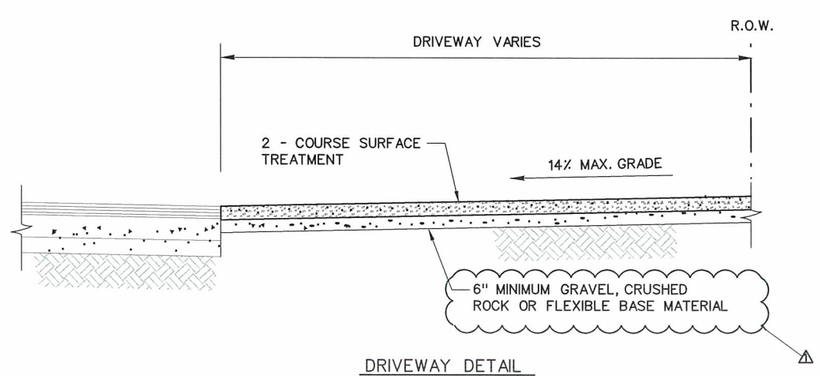

DRIVEWAY DETAIL

Reginald Fountain, P.E.
10/11/10

STATE OF TEXAS
REGINALD FOUNTAIN
97328
LICENSED
PROFESSIONAL ENGINEER

NO.	REVISION	BY	DATE
1	CHANGE TO BASE THICKNESS	RTF	01-10

CP&Y

TBPE FIRM REGISTRATION NO: 1741

BEXAR COUNTY
PUBLIC WORKS DIVISION

HIGHLAND OAKS SUBDIVISION–MEMORIAL LANE

DRIVEWAY SUMMARY

SHEET 1 OF 1

Designed: RTF	STATE	BEXAR COUNTY FILE NUMBER	PLAN SET NO.
Checked: JA	TEXAS		
Drawn: RTF	COUNTY		OF
Checked: JA	BEXAR		

c:\pwworking\rfountain\d0101294\8047N002.999
10/11/2010 1:02:51 PM

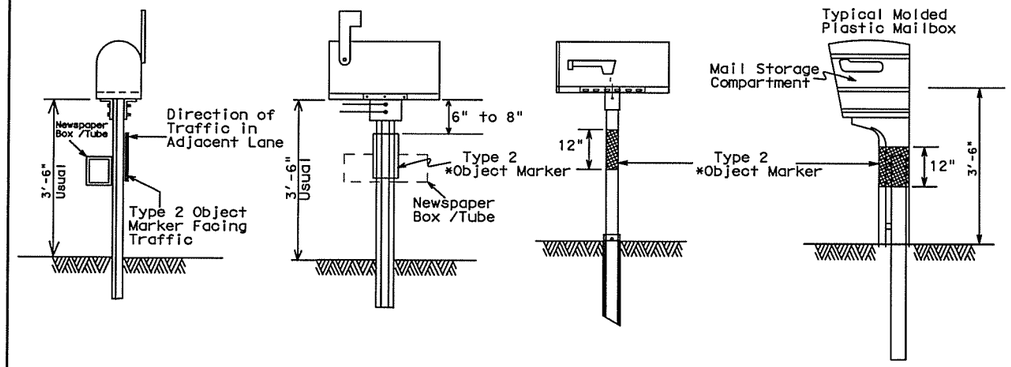

SINGLE AND DOUBLE MAILBOX MOUNT

FOR SUPPORT/FOUNDATION DETAILS SEE SHEET 3 OF 3

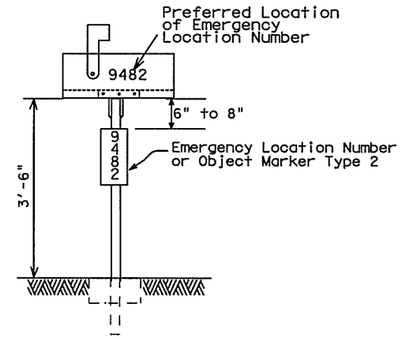

Location Number shall be placed on a yellow, type A plate with class 1 flat surface reflective sheeting in accordance with DMS 8600. (Same type plate as used for the type 2 Object Marker) The color of numbers shall be black. Recommended sign size 6" by 15")

PLACEMENT OF EMERGENCY LOCATION NUMBER

Mailboxes shall be made of light weight sheet metal or light weight plastic. Heavy steel, cast iron or decorative mailboxes shall not be used on the state highway system.

TYPICAL MAILBOX SIZE				LIGHT WEIGHT MATERIAL	
				SHEET METAL	**PLASTIC
	LENGTH	WIDTH	HEIGHT	MAXIMUM WEIGHT	
SIZE	INCHES			POUNDS	
SMALL	19 ½	6	7	5	5
MEDIUM	22 ½	8	11 ½	7	7
LARGE	23 ½*	11 ½*	13 ½*	10	10

* Maximum allowed dimensions for mailbox
** Excluding Molded Plastic on 4 X 4 Post

MAILBOX SIZES

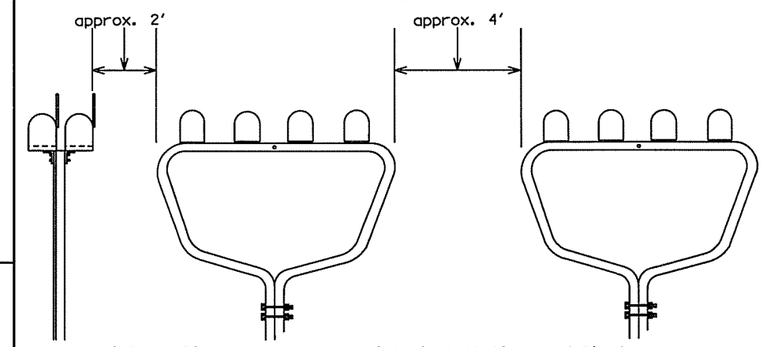

4' Clear Distance between multiple installations and 2' clearance between double or single installations and the multiple installation. DHT #'s 164116 or 149339.

MULTIPLE MAILBOX PLACEMENT

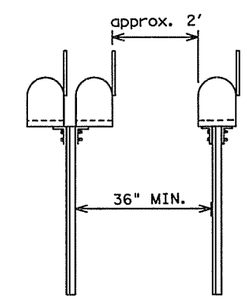

Clear Distance between single or double mounted posts. (Normally when 3 or more mailboxes are in one location, a multiple support is used).

SINGLE & DOUBLE MAILBOX PLACEMENT

* Type 2 object marker in accordance with standard D&OM (1) or tube type post wrapped with 12 " Sheeting Fluorescent yellow in accordance with DMS 8600 for tubular post needed to produce a smooth wrap around tube. DHT 161812.

NOTE: - ALL WELDS 1/4" AROUND ALL JOINTS. POWDERCOAT WHITE

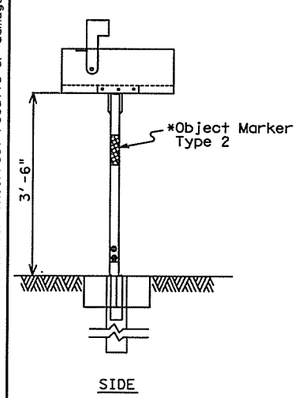

SIDE

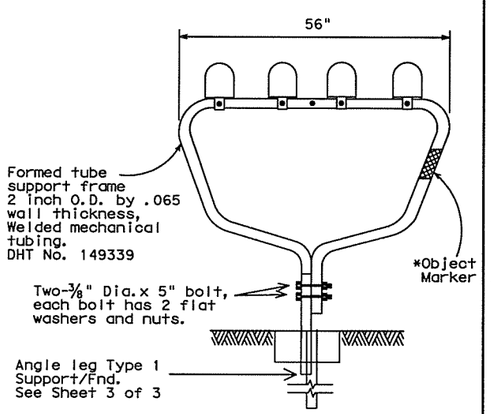

FRONT

FOR SUPPORT/FOUNDATION DETAILS SEE SHEET 3 OF 3

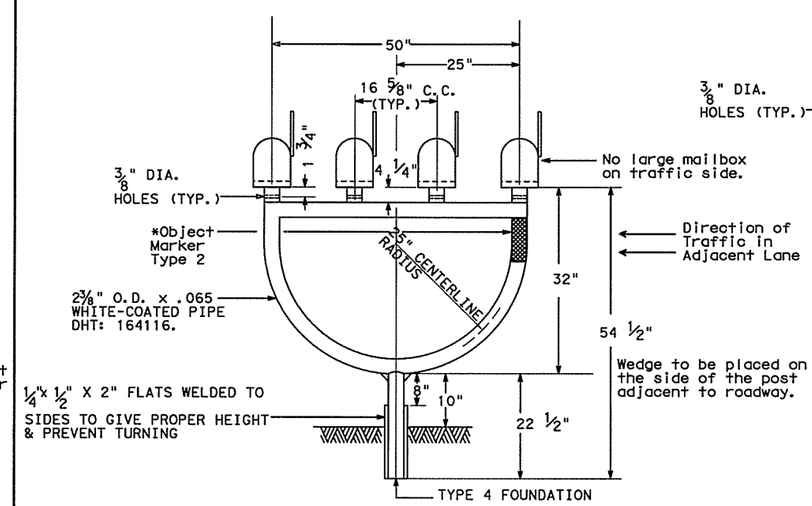

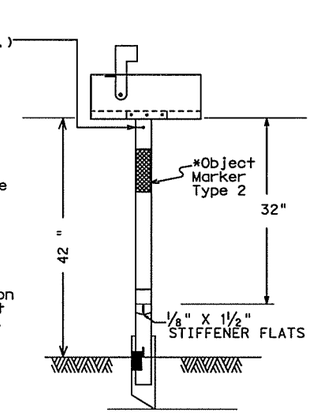

SIDE

FOR SUPPORT/FOUNDATION DETAILS SEE SHEET 3 OF 3

NEWSPAPER RECEPTACLE

A light weight receptacle for newspaper delivery should be attached to the post of single and double mailboxes if the receptacle:

a. Does not touch the mailbox.

b. Does not present a hazard to traffic or delivery of the mail.

c. Does not extend beyond the front of the mailbox.

d. Does not display advertising, except the publication title.

MULTIPLE MAILBOX MOUNT

Note on DHT Number

See Table of Applicable DHT Numbers on sheet 3 of 3 for DHT description.

INDEX OF MAILBOX DETAIL SHEETS

1 of 3 MAILBOX MOUNTING AND SPACING
2 of 3 MAILBOX BRACKET CONNECTING DETAILS
3 Of 3 MAILBOX SUPPORT / FOUNDATION

DISCLAIMER: Use of this standard is governed by the "Texas Engineering Practice Act". No warranty is made by TxDOT for any purpose whatsoever. TxDOT assumes no responsibility for the conversion of this standard to other formats or for incorrect results or damages resulting from its use.

LEVELS DISPLAYED: 1 2 3 4 5 6 7 8 9 10 11 12 31 41 51 61 17 18 19 20 21 22 32 42 52 62 72 82 92 93 03 13 2 33 34 35 36 37 38 39 40 41 42 43 44 45 46 47 48 49 50 51 52 53 54 55 56 57 58 59 60 61 62 63

FILE: MB-06(1).dgn

Standard Plans

Texas Department of Transportation

Maintenance Division

MAILBOX MOUNTING AND SPACING

MB-06(1)

Sheet 1 of 3

FILE:	MB06(1).DGN	DN: JEO	CK: LJB	DW: JEO	CK: JG	NEG:
© TxDOT NOVEMBER 2006		DIST	FED REG	FEDERAL AID PROJECT		SHEET
			6			30
		COUNTY		CONTROL	SECT	JOB	HIGHWAY

REVISIONS
04/03/06: Added New Multiply Mount, DHT: 164116.
04/03/06: Added general note numbers 6 & 7.
Sheet & title block renumbered.
11/14/05: Deleted sheet 4

08/02/06: Added Maximum weight for typical mailbox size.

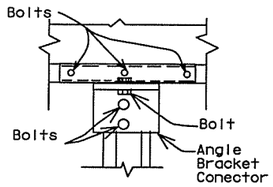

For bolt sizes see details below for "SMALL MAILBOX" and "MEDIUM AND LARGE MAILBOXES"

SINGLE MAILBOX CONNECTION

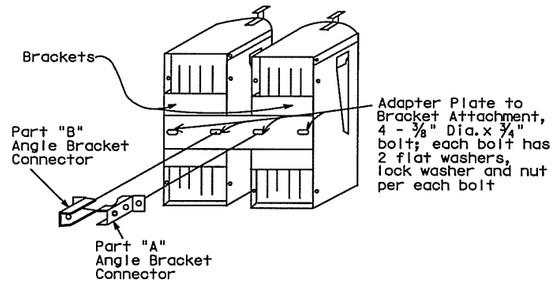

DOUBLE MAILBOX CONNECTION

(Not permitted for Large Mailboxes)

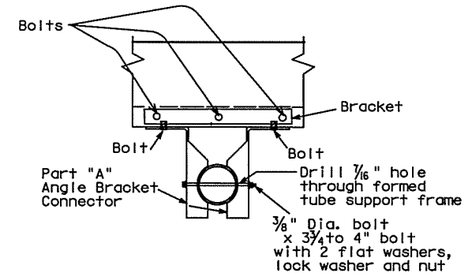

MULTIPLE MAILBOX CONNECTION

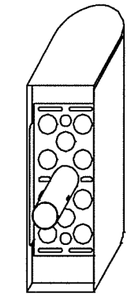

WELDED SINGLE MAILBOX BRACKET CONNECTION

To be used with
2 3/8" OD RR or
thinwall Steel posts.

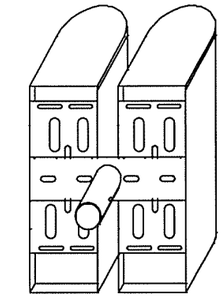

WELDED DOUBLE MAILBOX BRACKET CONNECTION WITH ADAPTER PLATE

To be used with
thinwall Steel posts.
Not to be used with
RR posts.

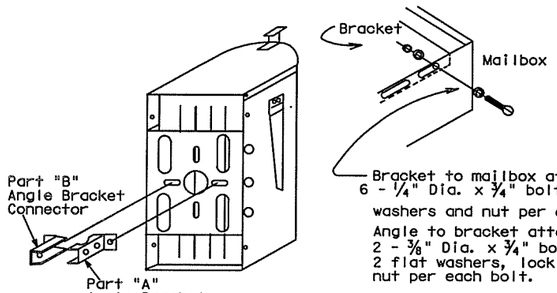

Bracket to mailbox attachment:
6 - 1/4" Dia. x 3/4" bolt w/ 2 flat washers and nut per each bolt.

Angle to bracket attachment:
2 - 3/8" Dia. x 3/4" bolt with 2 flat washers, lock washer and nut per each bolt.

Angle to
2 - 3/8" Dia. x 2 1/2" bolt with 2 flat washers, lock washer and nut per each bolt.

SMALL MAILBOX

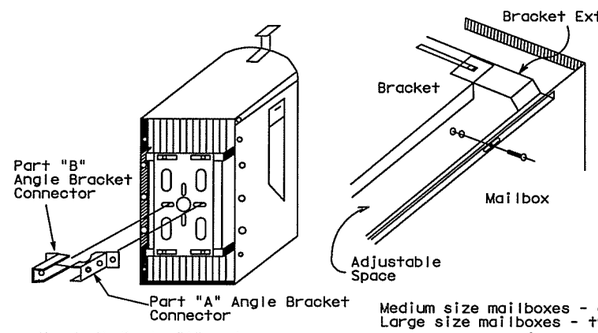

Use both Parts "A" and "B" Angle Bracket Connectors for Winged Channel Posts

Bracket to mailbox attachment:
6 - 1/4" Dia. x 3/4" bolt w/2 flat washers and nut per each bolt.

Bracket to bracket extension attachment:
2 - 1/4" Dia. x 3/4" carriage bolt w/ flat washer, lock washer and nut per bolt (4 bolts required if 2 bracket extensions are used).

Angle to bracket attachment:
2 - 3/8" Dia. x 3/4" bolt w/2 flat washers, lock washer and nut per each bolt.

Angle to mailbox support attachment:
2 - 3/8" Dia. x 2 1/2" bolt w/2 flat washers, lock washer, and nut per each bolt.

Medium size mailboxes - one extension bracket
Large size mailboxes - two extension brackets

MEDIUM AND LARGE MAILBOXES

GENERAL NOTES

1. Connecting hardware detailed on this sheet is for the hardware that the Department stocks at the Regional Warehouses. This hardware is available to the contractor only when so stated elsewhere in the plans or specification.
2. Hardware for mounting mailboxes to the support/foundation furnished by industry should be used when shown on the Maintenance Divisions "Approved Products List." Only mailbox hardware that have been crash tested in accordance with NCHRP Report 350, will be on the approved list.
3. Hardware furnished by industry shall be erected in accordance with the manufacturer's recommendation.
4. Bracket and bracket extension shall be constructed of 14 gauge galvanized steel sheet metal.
5. The angles, brackets and adapter plates shall be constructed of 12 gauge galvanized steel sheet metal.
6. Items with evidence of damage to the galvanized coating or wet storage stains (white rust) will not be accepted.

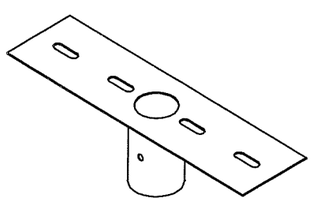

DHT 162323

For use with galvanized thinwall steel posts DHT # 143426 or powder-coated thinwall steel post DHT # 162911.

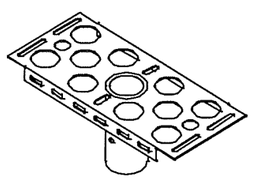

DHT 161443

For use with RCR post DHT # 161442 or galvanized thinwall steel post DHT # 143426 or powder-coated thinwall steel post. DHT # 162911.

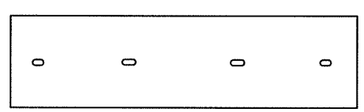

DHT #3789

Used for mounting two Mailboxes on the same post.

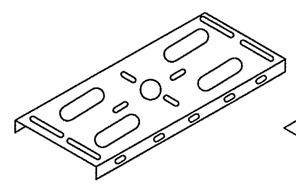

DHT 148939

Mailbox Bracket

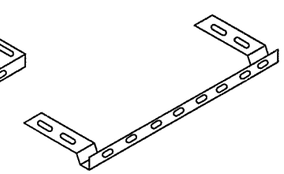

DHT 148938

Used for extending 6" wide bracket to attach larger mailboxes.

Bracket Extension

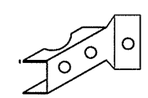

DHT 159489

Part "A"
Angle Bracket
Connector

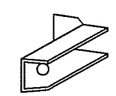

DHT 159490

Part "B"
Angle Bracket
Connector

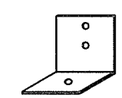

DHT 2917

Angle Bracket
For Temporary
Mailbox

Note on DHT Number

See Table of Applicable DHT Numbers on sheet 3 of 3 for DHT description and unit of measure.

HARDWARE AT TXDOT REGIONAL WAREHOUSES

Brackets and adapter plate shown in this section should be available to the Contractor when stated elsewhere in plans or specifications.

DISCLAIMER:
The use of this standard is governed by the "Texas Engineering Practice Act". No warranty of any kind is made by TxDOT for any purpose whatsoever. TxDOT assumes no responsibility for the conversion of this standard to other formats or for incorrect results or damages resulting from its use.

LEVELS DISPLAYED
1 2 3 4 5 6 7 8 9 10 11 12 31 41 51 61
17 18 19 20 21 22 23 24 25 26 27 28 29 30 31 32
33 34 35 36 37 38 39 40 41 42 43 44 45 46 47 48
49 50 51 52 53 54 55 56 57 58 59 60 61 62 63

FILE: MB-06-(1).dgn

Standard Plans

Texas Department of Transportation
Maintenance Division

MAILBOX BRACKET CONNECTING DETAILS

MB-06(1)

Sheet 2 of 3

FILE: MB06(1).DGN	DN: LJB	CK: JEO	DW:	CK: JG	NEG:	
© TxDOT NOVEMBER 2006	DIST	FED REG	FEDERAL AID PROJECT			SHEET
REVISIONS		6				31
02/02/05 06/08/05: Added general note numbers 6 & 7. Sheet & title block renumbered. 11/14/05: Deleted sheet4.	COUNTY			CONTROL	SECT	JOB	HIGHWAY

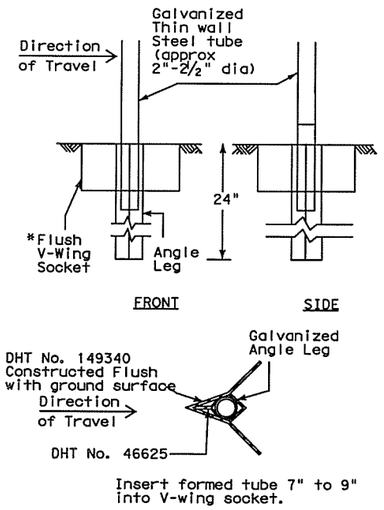

TYPE 1 SUPPORT/FOUNDATION

THIN WALL STEEL TUBE w/ V-LOC ANCHORAGE

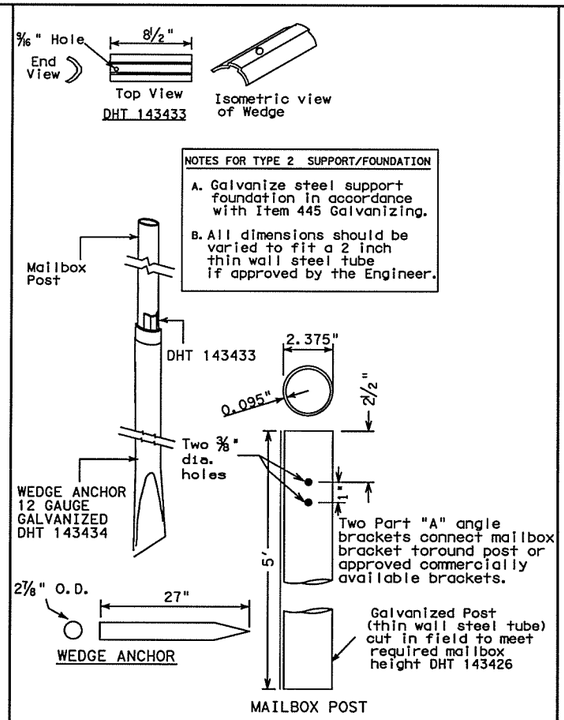

NOTES FOR TYPE 2 SUPPORT/FOUNDATION

A. Galvanize steel support foundation in accordance with Item 445 Galvanizing.

B. All dimensions should be varied to fit a 2 inch thin wall steel tube if approved by the Engineer.

TYPE 2 SUPPORT/FOUNDATION

THIN WALL STEEL TUBE w/ WEDGE ANCHOR SYSTEM

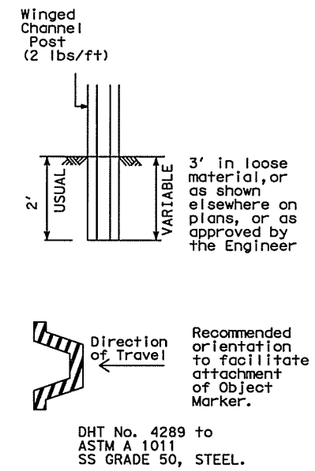

TYPE 3 SUPPORT/FOUNDATION

WINGED CHANNEL POST

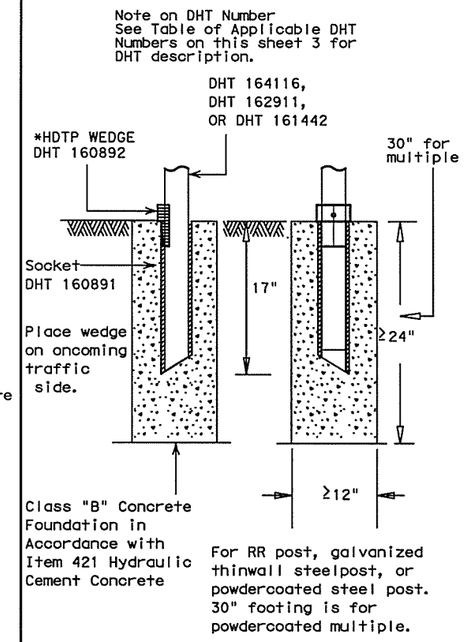

TYPE 4 SUPPORT/FOUNDATION

FOR WHITECOATED STEEL POST, MULTIPLE POST, AND RECYCLED RUBBER.

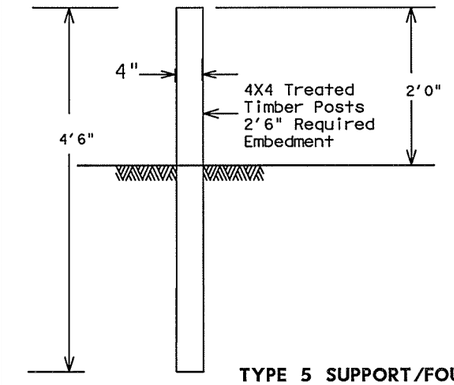

TYPE 5 SUPPORT/FOUNDATION

FOR ONE PIECE MOLDED PLASTIC MAILBOX

ONE PIECE MOLDED PLASTIC MAILBOXES

Molded Plastic Mailboxes shall be installed on 4"x4" treated timber posts only. The use of steel pipe or structural tubing in place of timber post is prohibited.

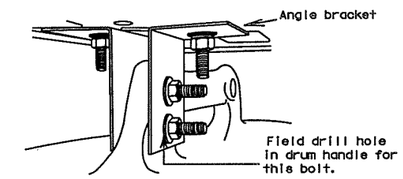

Placed on approved plastic drum as shown in the Compliant Work Zone Traffic Control Devices (CWZTCD).

Existing attachment hardware shall be used unless damaged. Damaged hardware shall be replaced.

TYPE 6 TEMPORARY MAILBOX SUPPORT

CONNECTION DETAIL

GENERAL NOTES

1. Erect post plumb or vertical.
2. When galvanized part is required galvanize in accordance with Item 445.
3. Type 1, 2, 3, or 4 supports or foundation can be used for single or double mailbox installations. The RCR post should be used only for a single installation with a small mailbox. The Type 5 support/foundation is used for the single molded plastic mailbox. The Type 4 support/foundation is used for the 2.375" O.D. RCR post, thin wall steel post, and white multiple mailbox post.
4. The Type 1 support/foundation can be used for a multiple mailbox mount. DHT 149339
5. The Type 4 support should be used with thin wall steel pipe for the medium, large and double mailbox installations.
6. Use a concrete footing as shown or when directed. Concrete footing will be required when soils do not hold the support/foundations in a stable condition.
7. A 2.375" O.D. galvanized thin wall posts can be used for Ty 1, 2 & 4.
8. When specified elsewhere in the plans, a 2.375$^{5}/_{32}$ O.D. galvanized thin wall powder coated white post DHT-162911 should be used for the medium, large, and double mailbox installations.

MB-(X) ASSM TY (XXX) (X) (XX) (OPTIONAL)

Type of Mailbox
- S = Single
- D = Double
- M = Multiple
- SP = Single Plastic

Type of Post
- WC = Winged Channel Post
- RR = Recycled Rubber
- TWW = Thin Walled White Tubing
- TWG = Thin Walled Galvanized Tubing
- TIM = Timber

Type of Foundation
- Ty 1 = V-Loc
- Ty 2 = Wedge Anchor Steel System
- Ty 3 = Winged Channel post
- Ty 4 = Wedge Anchor Plastic System
- Ty 5 = 4 X 4 Post

Type of Bracket
- AB = Angle Bracket.
- TB = 2.375" Tube Bracket

TABLE OF APPLICABLE DHT NUMBERS

DHT NUMBER	DESCRIPTION
	FOUNDATIONS
46625	WEDGE FOR V-WING SOCKET FOR TYPE 1 FOUNDATION
149340	V-WING SOCKET FOR TYPE 1 FOUNDATION
143433	WEDGE FOR TYPE 2 FOUNDATION
143434	ANCHOR FOR TYPE 2 FOUNDATION
160891	SOCKET FOR TYPE 4 FOUNDATION
160892	WEDGE FOR TYPE 4 FOUNDATION
	POSTS
4289	WINGED CHANNEL MAILBOX POST
149339	MULTIPLE MAILBOX POST (GALVANIZED TUBING)
164116	MULTIPLE MAILBOX POST (WHITE COATED)
161442	RECYCLED RUBBER POST. FOR SMALL MAILBOX ONLY
143426	THIN-WALL GALVANIZED STEEL TUBE 2.375" OUTER DIAMETER
162911	THINWALL WHITE STEEL TUBE 2.375" OUTER DIAMETER
	REFLECTIVE SHEETING
161812	REFLECTIVE SHEETING FOR EMERGENCY LOCATION NUMBER PANEL
	CONNECTING HARDWARE
2917	ANGLE BRACKET USED FOR TEMPORARY MAILBOX SUPPORT
3789	PLATE FOR DOUBLE MOUNTING OF MAILBOXES
148939	BRACKET FOR ATTACHING SMALL OR MEDIUM SIZE MAIL BOX
148938	EXTENDER TO BRACKET FOR ATTACHING LARGE MAILBOX
159490	ANGLE BRACKET PART B
159489	ANGLE BRACKET PART A
162323	BRACKET FOR DOUBLE MOUNTING OF MAILBOXES ON THINWALL STEEL POST, GALVANIZED OR POWDERCOATED.
161443	BRACKET FOR ATTACHING MAILBOX TO RECYCLED RUBBER POST AND TO MULTIPLE WHITE MAILBOX POST

DOUBLE AND LARGE MAILBOXES MUST BE ON STEEL POST.

*HDTP: High density thermoplastic polyesters

DISCLAIMER:
The use of this standard is governed by the Texas Engineering Practice Act". No warranty of any kind is made by TxDOT for any purpose whatsoever. TxDOT assumes no responsibility for the conversion of this standard to other formats or for incorrect results or damages resulting from its use.

FILE: MB-06-(1).dgn

LEVELS DISPLAYED

1	2	3	4	5	6	7	8	9	10	11	12	13	14	15	16																
17	18	19	20	21	22	23	24	25	26	27	28	29	30	31	32																
33	34	35	36	37	38	39	40	41	42	43	44	45	46	47	48																
49	50	51	52	53	54	55	56	57	58	59	60	61	62	63																	

Standard Plans

Texas Department of Transportation

Maintenance Division

MAILBOX SUPPORT/ FOUNDATION

Sheet 3 of 3 **MB-06(1)**

FILE: MB06(1).DGN	DN: JEO	CK: LJB	DW: JEO	CK: JG	NEG:
© TxDOT NOVEMBER 2006	DIST	FED REG	FEDERAL AID PROJECT		SHEET
02/02/05 REVISIONS 06/08/05: Added general note numbers 6 & 7. Sheet & title block renumbered. 11/14/05: Deleted sheet 4. 08/03/06: Added DHT table, Mailbox descriptive codes and bid items.		6			32
	COUNTY		CONTROL	SECT	JOB	HIGHWAY

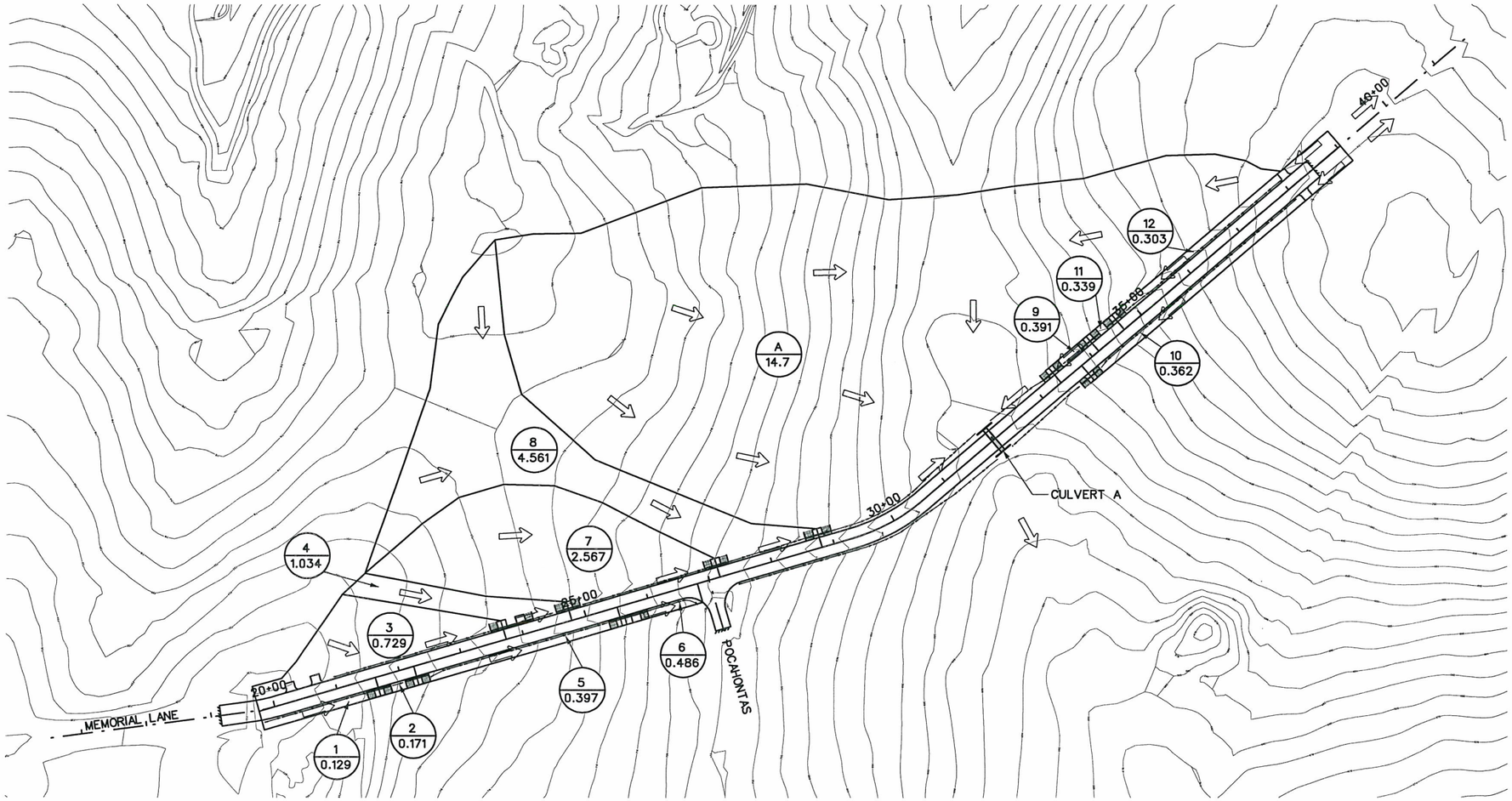

N

100 50 0 100 200
SCALE FEET

LEGEND

⇦ DIRECTION OF FLOW

(10 / 0.362) DRAINAGE AREA NAME / DRAINAGE AREA IN ACRES

NOTES:
1. ALL ACREAGE SHOWN IS CUMULATIVE AND INCLUDES UPSTREAM AREAS.
2. CONTOURS DISPLAYED ARE CITY OF SAN ANTONIO 2 FOOT CONTOURS.

Reginald Fountain, P.E. 10/30/09

STATE OF TEXAS
REGINALD FOUNTAIN
97328
LICENSED
PROFESSIONAL ENGINEER

* C VALUES USED FROM CITY OF SAN ANTONIO UDC:
C=0.96 FOR PAVEMENT
C=0.62 FOR LARGE LOT RESIDENTIAL (ULTIMATE CONDITION)
C=0.49 FOR UNDEVELOPED (EXISTING CONDITION)

DA NAME	STRUCTURE	AREA INCLUDES	PAVEMENT (ACRES)	RESIDENTIAL/ UNDEVELOPED (ACRES)	TOTAL AREA (ACRES)	Tc (min)	EXISTING $C_{COMPOSITE}$	ULTIMATE $C_{COMPOSITE}$	INTENSITY			DISCHARGE		
									Exist. i_{25} (in/hr)	Ult. i_{25} (in/hr)	Ult. i_{100} (in/hr)	Exist. Q_{25} (cfs)	Ult. Q_{25} (cfs)	Ult. Q_{100} (cfs)
A	CULVERT A	3,4,7,8,9,11,12	0.7	14.0	14.7	12	0.52	0.64	6.98	6.98	8.35	54	65	78
1	DRIVEWAY 3	-	0.068	0.061	0.129	5	0.74	0.80	8.76	8.76	10.44	0.8	0.9	1.1
2	DRIVEWAY 4	1	0.09	0.081	0.171	5	0.74	0.80	8.76	8.76	10.44	1.1	1.2	1.4
3	DRIVEWAY 5&6	-	0.147	0.582	0.729	8	0.59	0.69	7.94	7.94	9.47	3.4	4.0	4.8
4	DRIVEWAY 7	3	0.186	0.848	1.034	9	0.58	0.68	7.69	7.69	9.17	4.6	5.4	6.5
5	DRIVEWAY 8&9	1,2	0.211	0.186	0.397	5	0.74	0.80	8.76	8.76	10.44	2.6	2.8	3.3
6	POCAHONTAS	1,2,5	0.261	0.225	0.486	5	0.75	0.80	8.76	8.76	10.44	3.2	3.4	4.1
7	DRIVEWAY 10	3,4	0.274	2.293	2.567	10	0.55	0.66	7.44	7.44	8.88	10.5	12.5	15.0
8	DRIVEWAY 11	3,4,7	0.334	4.227	4.561	11	0.53	0.64	7.21	7.21	8.61	17.6	21.2	25.3
9	DRIVEWAY 12	11,12	0.209	0.182	0.391	5	0.75	0.80	8.76	8.76	10.44	2.6	2.7	3.3
10	DRIVEWAY 13	-	0.193	0.169	0.362	5	0.75	0.80	8.76	8.76	10.44	2.4	2.5	3.0
11	DRIVEWAY 14	12	0.181	0.158	0.339	5	0.75	0.80	8.76	8.76	10.44	2.2	2.4	2.8
12	DRIVEWAY 15	-	0.162	0.141	0.303	5	0.75	0.80	8.76	8.76	10.44	2.0	2.1	2.5

NO.	REVISION	BY	DATE

CP&Y
TBPE FIRM REGISTRATION NO: 1741

BEXAR COUNTY
PUBLIC WORKS DIVISION

HIGHLAND OAKS SUBDIVISION–MEMORIAL LANE

DRAINAGE

DRAINAGE AREA MAP AND CALCULATIONS

SHEET 1 OF 1

Designed: JAS	STATE	BEXAR COUNTY FILE NUMBER	PLAN SET NO.
Checked: RTF	TEXAS		33
Drawn: JAS	COUNTY		OF
Checked: RTF	BEXAR		62

C:\PWWorking\jerna\d0101296\8047DAM01.DGN
10/29/2009 11:49:34 AM

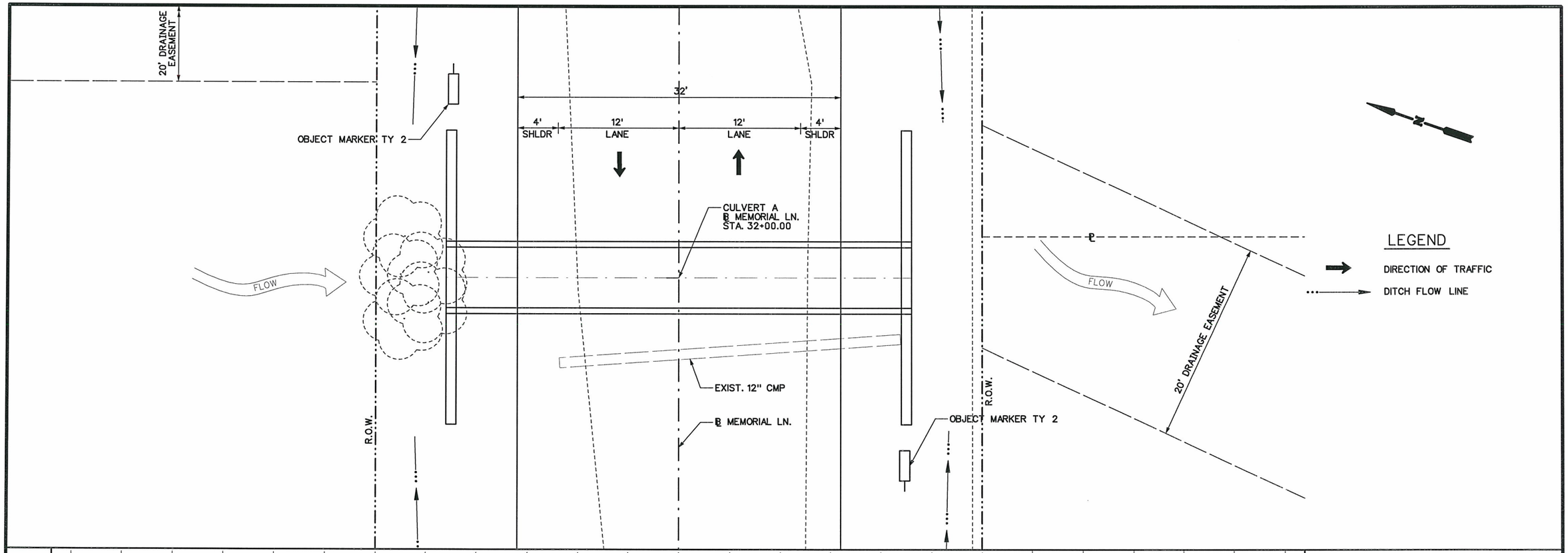

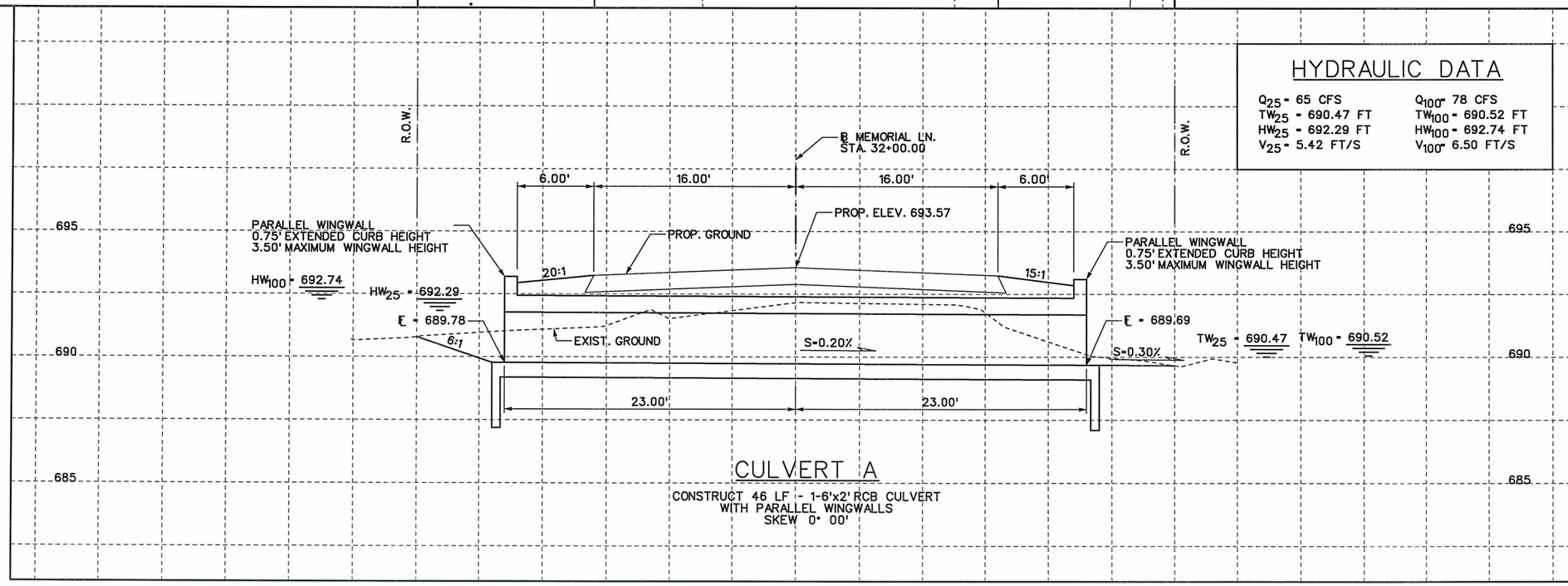

HYDRAULIC DATA

Q_{25} = 65 CFS	Q_{100} = 78 CFS
TW_{25} = 690.47 FT	TW_{100} = 690.52 FT
HW_{25} = 692.29 FT	HW_{100} = 692.74 FT
V_{25} = 5.42 FT/S	V_{100} = 6.50 FT/S

5 0 5 10
SCALE HORIZONTAL FEET

2.5 0 2.5 5
SCALE VERTICAL FEET

Reginald Fountain, P.E.
10/30/09

STATE OF TEXAS
REGINALD FOUNTAIN
97328
LICENSED
PROFESSIONAL ENGINEER

NO.	REVISION	BY	DATE

CP&Y
TBPE FIRM REGISTRATION NO: 1741

BEXAR COUNTY
PUBLIC WORKS DIVISION

HIGHLAND OAKS SUBDIVISION–MEMORIAL LANE

CULVERT PLAN AND PROFILE

CULVERT A

SHEET 1 OF 1

Designed: JAS	STATE	BEXAR COUNTY FILE NUMBER	PLAN SET NO.
Checked: RTF	TEXAS		34
Drawn: JAS	COUNTY		OF
Checked: RTF	BEXAR		62

C:\PWWorking\bexar\d0101296\B047CPP01.010
10/29/2009 11:50:02 AM

TEXAS HYDRAULIC SYSTEM, CULVERT (ver. 1.1. Jan/1998)
Wed Oct 28 16:57:24 2009

CULVERT HYDRAULIC COMPUTATIONS

CULVERT NAME: Culvert A' Input Units: English
PROJECT NAME: Highland Output Units: English
PROJECT CONTROL: CSJ:
COUNTY: Bexar
DESCRIPTION: Highland

ANALYZE MULTIPLE OPENING CULVERT

MATERIAL: CONCRETE
SHAPE: CONCRETE BOX.
ENTRANCE: BEVEL TO SLOPE
PROFILE: STRAIGHT CULVERT

FREQUENCY: 25e DISCHARGE: 54.00 cfs TAILWATER: 689.94 ft
FREQUENCY: 25u DISCHARGE: 65.00 cfs TAILWATER: 690.00 ft
FREQUENCY: 100u DISCHARGE: 78.00 cfs TAILWATER: 690.05 ft

TAILWATER ELEVATION (computed).

n value: 0.0120 Ke value: 0.2000

CULVERT RISE = 2.00 ft CULVERT SPAN = 3.00 ft BARRELS = 2

INLET station: −23.00 elevation: 689.78 ft
OUTLET station: 23.00 elevation: 689.69 ft

Cross section profile (XY Coordinates) ft

X	Y	X	Y	X	Y
0.00	690.67	20.00	689.67	40.00	690.67

Road profile (XY Coordinates) ft

X	Y	X	Y	X	Y
3000.00	695.49	3100.00	693.79	3164.94	693.47
3200.00	693.57	3300.00	694.45		

CULVERT OUTPUT RUN NO => 1

TAILWATER ELEVATION: 690.41 ft (computed).

ANALYSIS for discharge frequency of : 25e

Barls.	Qpb cfs	Rise ft	Span ft	Length ft	Max.HW elev ft	Calc.HW elev ft	HW ft	Control	Veloc. ft/s	Out.depth ft
2	27.00	2.00	3.00	46.00	0.00	691.97	2.19	Outlet	6.62	1.36

Inlet control depth = 2.16 ft
Outlet control depth = 2.19 ft

Normal depth = 1.86 ft Culvert slope = 0.00196
Critical depth = 1.36 ft Critical slope = 0.00448
Road top width => 32.00 ft. Road pavement type => asphalt
Computed Weir Coefficient => 3.00.

No discharge over the road.

CULVERT OUTPUT RUN NO => 2

TAILWATER ELEVATION: 690.47 ft (computed).

ANALYSIS for discharge frequency of : 25u

Barls.	Qpb cfs	Rise ft	Span ft	Length ft	Max.HW elev ft	Calc.HW elev ft	HW ft	Control	Veloc. ft/s	Out.depth ft
2	32.50	2.00	3.00	46.00	0.00	692.29	2.51	Inlet	5.42	2.00

Inlet control depth = 2.51 ft
Outlet control depth = 2.48 ft

Normal depth = 2.00 ft Culvert slope = 0.00196
Critical depth = 1.54 ft Critical slope = 0.00466
Road top width => 32.00 ft. Road pavement type => asphalt
Computed Weir Coefficient => 3.00.

No discharge over the road.

CULVERT OUTPUT RUN NO => 3

TAILWATER ELEVATION: 690.52 ft (computed).

ANALYSIS for discharge frequency of : 100u

Barls.	Qpb cfs	Rise ft	Span ft	Length ft	Max.HW elev ft	Calc.HW elev ft	HW ft	Control	Veloc. ft/s	Out.depth ft
2	39.00	2.00	3.00	46.00	0.00	692.74	2.96	Inlet	6.50	2.00

Inlet control depth = 2.96 ft
Outlet control depth = 2.86 ft

Normal depth = 2.00 ft Culvert slope = 0.00196
Critical depth = 1.74 ft Critical slope = 0.00487
Road top width => 32.00 ft. Road pavement type => asphalt
Computed Weir Coefficient => 3.00.

No discharge over the road.

RUNING MESSAGES LIST:

NORMAL TERMINATION OF THYSYS, CULVERT.

Reginald Fountain 10/30/09

STATE OF TEXAS
REGINALD FOUNTAIN
97328
LICENSED PROFESSIONAL ENGINEER

NO.	REVISION	BY	DATE

CP&Y
TBPE FIRM REGISTRATION NO: 1741

BEXAR COUNTY
PUBLIC WORKS DIVISION

HIGHLAND OAKS SUBDIVISION–MEMORIAL LANE

CULVERT COMPUTATIONS

CULVERT A

SHEET 1 OF 1

Designed: JAS	STATE	BEXAR COUNTY FILE NUMBER	PLAN SET NO.
Checked: RTF	TEXAS		35
Drawn: JAS	COUNTY		OF
Checked: RTF	BEXAR		62

c:\pwworking\bexrno\d0101296\B047CCP01.DGN
10/29/2009 11:50:29 AM

LEFT DITCH

STATION	OFFSET	FLOWLINE ELEVATION	LEFT SLOPE	RIGHT SLOPE
21+00	19.00	725.91	3:1	3:1
21+62	19.00	723.86	3:1	3:1
22+00	19.00	722.61	3:1	3:1
22+23	19.00	721.83	3:1	3:1
23+00	19.00	719.31	3:1	3:1
25+00	19.00	712.47	3:1	3:1
25+51	19.00	710.55	3:1	3:1
25+75	19.00	709.64	3:1	3:1
26+00	19.00	708.69	3:1	3:1
26+99	19.00	704.93	3:1	3:1
27+00	19.00	704.91	3:1	3:1
28+00	20.50	700.63	3:1	3:1
29+00	20.50	696.85	3:1	3:1
30+00	19.53	693.99	3:1	3:1
31+00	23.50	690.97	5:1	3:1
33+00	23.63	691.96	10:1	3:1
33+78	20.50	695.03	16:1	3:1
34+00	20.50	695.74	10:1	3:1
35+00	20.50	699.58	3:1	5:1
36+00	19.00	702.91	3:1	3:1
37+00	19.00	706.25	3:1	3:1
38+00	19.00	709.59	3:1	3:1

RIGHT DITCH

STATION	OFFSET	FLOWLINE ELEVATION	LEFT SLOPE	RIGHT SLOPE
20+00	18.62	728.22	3:1	3:1
20+32	19.00	727.73	3:1	3:1
20+41	19.00	727.55	3:1	3:1
20+73	19.00	726.77	3:1	3:1
21+00	19.00	725.91	3:1	3:1
22+00	19.00	722.61	3:1	3:1
23+00	19.00	719.31	3:1	8:1
23+73	19.00	716.89	3:1	3:1
24+00	19.00	716.01	3:1	3:1
24+03	19.00	715.92	3:1	3:1
24+77	19.00	713.32	3:1	3:1
25+00	19.00	712.47	3:1	3:1
26+00	19.00	708.69	3:1	3:1
28+00	19.00	701.13	3:1	19:1
28+81	19.00	698.08	3:1	20:1
29+00	19.00	697.35	3:1	17:1
30+00	20.50	693.67	3:1	9:1
31+00	25.00	690.47	3:1	5:1
33+00	23.50	692.01	3:1	18:1
33+37	22.00	693.36	3:1	6:1
34+00	19.00	696.24	3:1	16:1
34+13	19.00	696.68	3:1	10:1
34+65	19.00	698.41	3:1	3:1
35+00	19.00	699.58	3:1	3:1
36+00	19.00	702.91	3:1	3:1
37+00	17.98	706.59	3:1	3:1
38+00	18.70	709.69	3:1	3:1

Reginald Fountain, P.E.
10/29/09

STATE OF TEXAS
REGINALD FOUNTAIN
97328
LICENSED
PROFESSIONAL ENGINEER

NO.	REVISION	BY	DATE

CP&Y

TBPE FIRM REGISTRATION NO: 1741

BEXAR COUNTY
PUBLIC WORKS DIVISION

HIGHLAND OAKS SUBDIVISION–MEMORIAL LANE

DRAINAGE

DITCH TABLES

SHEET 1 OF 1

Designed: JAS	STATE	BEXAR COUNTY FILE NUMBER	PLAN SET NO.
Checked: RTF	TEXAS		36
Drawn: JAS	COUNTY		OF
Checked: RTF	BEXAR		62

C:\PWWorking\jaerna\d0101296\B047DTB01.DGN
10/29/2009 11:50:56 AM

Culvert Station and/or Creek name followed by applicable end (Lt, Rt or Both)	Description of Box Culvert No. Spans ~ Span X Height	Max Fill Height (Ft)	Applicable Box Culvert Standard (4)	Applicable Wingwall or End Treatment Standard	Skew Angle (0°, 15°, 30° or 45°)	Side Slope or Channel Slope Ratio (SL:1)	T Culvert Top Slab Thickness (In)	U Culvert Wall Thickness (In)	C Estimated Curb Height (Ft)	Hw (1) Height of Wingwall (Ft)	A Curb to End of Wingwall (Ft)	B Offset of End of Wingwall (Ft)	Lw Length of Longest Wingwall (Ft)	Ltw Culvert Toewall Length (Ft)	Atw Anchor Toewall Length (Ft)	Riprap Apron (C.Y.)	Class (2) "C" Conc (Curb) (C.Y.)	Class (3) "C" Conc (Wingwall) (C.Y.)	Total Wingwall Area (S.F.)
Culvert A Station 32+00 (Both)	1 ~ 6'x 2'	1'	Non-Stndrd	PW	0°	3:1	8"	7"	0.750'	3.417'	N/A	N/A	10.250'	7.167'	N/A	0.0	0.4	10.8	140

DISCLAIMER:
The use of this standard is governed by the "Texas Engineering Practice Act". No warranty of any kind is made by TxDOT for any purpose whatsoever. TxDOT assumes no responsibility for the conversion of this standard to other formats or for incorrect results or damages resulting from its use.

COMMENTS:

LEVELS DISPLAYED

NOTES:

Skew Angle = 0° for SW-0, FW-0, SETB-CD, SETB-SW-0, and SETB-FW-0 standards.
30° Maximum for Safety End Treatment

SL:1 = Horizontal:1 Vertical
Side Slope at culvert for Flared or Straight Wingwalls. Channel Slope for Parallel Wingwalls.
Slope shall be 3:1 or flatter for Safety End Treatments.

T = Box Culvert Top Slab Thickness. Dimension can be found on the applicable Box Culvert Standard.

U = Box Culvert Wall Thickness. Dimension can be found on the applicable Box Culvert Standard.

C = Curb Height.

See applicable wing or end treatment standards for calculations of Hw, A, B, Lw, Ltw, Atw, and Total Wingwall Area.
Hw = Height of Wingwall.
A = Distance from Face of Curb to End of Wingwall (Not applicable to Parallel or Straight Wingwalls).
B = Offset of End of Wingwall (Not applicable to Parallel or Straight Wingwalls).
Lw = Length of Longest Wingwall.
Ltw = Length of Culvert Toewall (Not applicable when using Riprap Apron).
Atw = Length of Anchor Toewall (Applicable to Safety End Treatment only).
Total Wingwall Area = Wingwall area in S.F. for two wingwalls (one structure end) if Lt or Rt.
Area for four wingwalls (two structure ends) if Both.

(1) The wall heights shown will be rounded to the nearest Foot for bidding purposes.

(2) Concrete volume shown is for box culvert curb only. For curbs using the RAC standard, quantities shown must be increased by a factor of 2. If Class "S" concrete is required for the top slab of the culvert, the curb concrete shall also be Class "S". Curb concrete is considered part of the Box Culvert for payment.

(3) Concrete volume shown is total of wing, footing, culvert toewall (if any), anchor toewall (if any) and wingwall toewall. Riprap apron, culvert and curb quantities are not included.

(4) Regardless of the type of culvert shown on this sheet, the Contractor shall have the option of furnishing cast-in-place or precast culverts unless otherwise shown elsewhere on the plans. If the Contractor elects to provide culverts of a different type than those shown on this sheet, it shall be the Contractor's responsibility to make the necessary adjustments to the dimensions and quantities shown.

Reginald Fountain P.E.
10/30/09

STATE OF TEXAS
REGINALD FOUNTAIN
97328
LICENSED
PROFESSIONAL ENGINEER

SPECIAL NOTE:

This sheet is a supplement to the Box Culvert standards. It is to be filled out by the culvert specifier and provides dimensions for the construction of the Box Culvert Wingwalls and Safety End Treatments.

An Excel 97 spreadsheet to assist in completing this table can be downloaded from the Bridge Standards (English) web page on the TxDOT web site. The completed sheet shall be signed, sealed, and dated by a licensed Professional Engineer.

Texas Department of Transportation
Bridge Division

BOX CULVERT SUPPLEMENT
WINGS AND END TREATMENTS

BCS

FILE: bcsstde1.dgn	DN: TxDOT	CK: TxDOT	DW: TxDOT	CK: GAF
© TxDOT May 2005	DISTRICT	FEDERAL AID PROJECT		SHEET 37
REVISIONS	COUNTY: BEXAR	CONTROL	SECT	JOB	HIGHWAY

DISCLAIMER: The use of this standard is governed by the "Texas Engineering Practice Act". No warranty of any kind is made by TxDOT for any purpose whatsoever. TxDOT assumes no responsibility for the conversion of this standard to other formats or for incorrect results or damages resulting from its use.

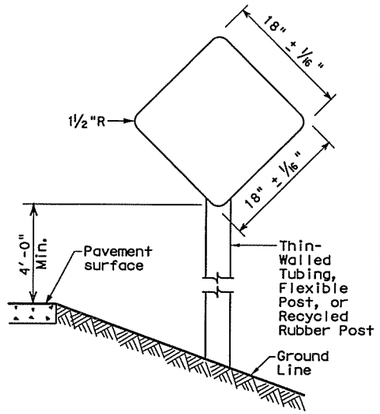

TYPE 1
18" x 18"
Yellow
Type E Sheeting

TYPE 4
18" x 18"
Red
Type D Sheeting

Use Sign blank 0.080" thick sheet aluminum conforming to ASTM B-209 Alloy 6061-T6. Use reflective sheeting in accordance with DMS 8300.

TYPES 1 and 4

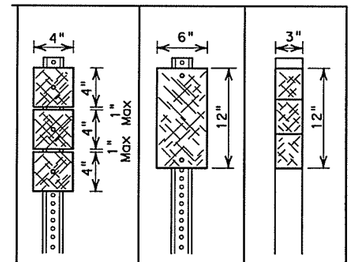

Number of Reflectors	X	Y	Z
Post	WC	WC	FLX/RCR

NOTES

1. All type 2 object markers are yellow
2. WC-wing channel post, 1.12 lbs/ft steel per ASTM A 1011 SS Gr 50, or ASTM A499
3. FLX/RCR-flexible post (driveable and surface mount) or recycled rubber

Typically used on bridge rail approach ends, some bridge abutments and at bridge rail exits on two-lane, two-way roadways

TYPE 2

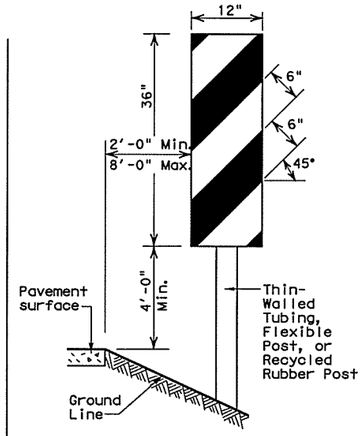

OM-3 Directions

L - Placed on Left Side
R - Placed on Right Side
C - Placed on Center

Use Sign blank .080" thick sheet aluminum conforming to ASTM B-209 Alloy 6061-T6. Use reflective sheeting in accordance with DMS 8300, Type E. Use at bridges with no approach rails.

TYPE 3

OBJECT MARKERS

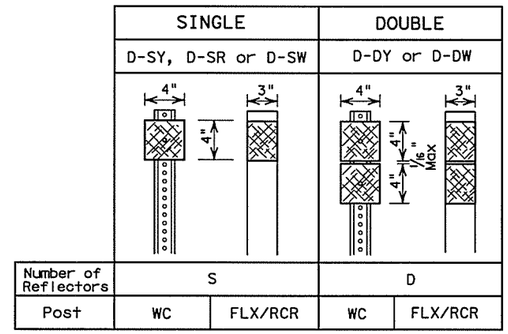

Number of Reflectors	S		D	
Post	WC	FLX/RCR	WC	FLX/RCR

NOTES

1. Reflector Units: W-White, R-Red, Y-Yellow
2. Length of post may vary to meet field conditions.
3. WC-wing channel post, 1.12 lbs/ft Steel per ASTM A 1011 SS Gr 50, or ASTM A499
4. FLX/RCR-flexible post (driveable and surface mount) or recycled rubber.

DELINEATORS

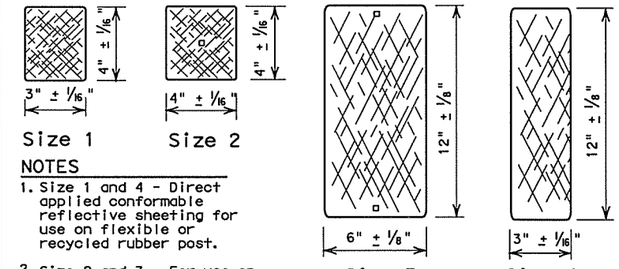

NOTES

1. Size 1 and 4 - Direct applied conformable reflective sheeting for use on flexible or recycled rubber post.
2. Size 2 and 3 - For use on Wing Channel post only. Use approved metal, plastic or fiberglass backplate with 17/64" square mounting holes.
3. Yellow, White & Red: Conformable Reflective Sheeting as per DMS 8300.

REFLECTOR UNIT SIZES

NOTES

1. A reflector unit or sheeting (per DMS 8600) attached to a bracket to facilitate the mounting of the reflector on concrete traffic barrier, railing, metal beam guard fence (MBGF) or other locations shown on the plans. A list of appoved barrier reflectors can be found at: www.txdot.gov
2. Yellow, White and Red: Conformable Reflective Sheeting as per DMS 8300.

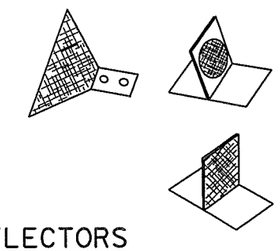

BARRIER REFLECTORS

D & OM DESCRIPTIVE CODES

INSTL DEL ASSM (D-XX) SZ X (XXX) XXX (XX)

NUMBER OF REFLECTORS
- S = Single
- D = Double

COLOR OF REFLECTORS
- W = White
- Y = Yellow
- R = Red

REFLECTOR UNIT SIZE
- 1 or 2

TYPE OF POST OR DELINEATOR
- WC = Wing Channel Post
- FLX = Flexible Post
- RCR = Recycled Rubber
- TYC = Barrier Reflector

TYPE OF INSTALLATIONS
- GND = Ground Mount
- CTB = Concrete Barrier Mount
- GF1, GF2, GF3 = Guard Fence Attachment
- SRF = Surface Mount
- SLF = Self Righting Surface Mount

DIRECTION
- If Required
- BI = Bi-Directional
- BR = Bi-Directional with red on back

INSTL OM ASSM (OM-XX) (XXX) XXX (XX)

TYPE OF OBJECT MARKER
- 1, 2, 3, or 4

NUMBER OF REFLECTORS OR DIRECTION
- X = 3-Size 2 reflector units (Type 2 only)
- Y = 1-Size 3 reflector unit (Type 2 only)
- Z = 3-Size 1 or 1-Size 4 reflector unit(s) (Type 2 only)
- L = Left Side (Type 3 Object Marker only)
- R = Right Side (Type 3 Object Marker only)
- C = Center (Type 3 Object Marker only)

TYPE OF POST
- WC = Wing Channel Post
- FLX = Flexible Post
- RCR = Recycled Rubber
- TWT = Thin Walled Tubing

TYPE OF MOUNT
- GND = Ground Mount
- WP = Wedge Anchor Plastic (HDPE) System
- SRF = Surface Mount
- SLF = Self Righting Surface Mount
- WS = Wedge Anchor Steel System

DIRECTION
- If Required
- BI = Bi-Directional

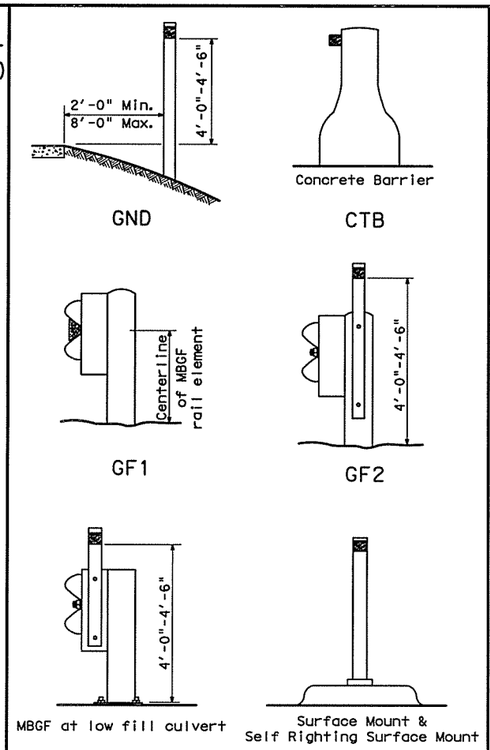

TYPES OF INSTALLATIONS

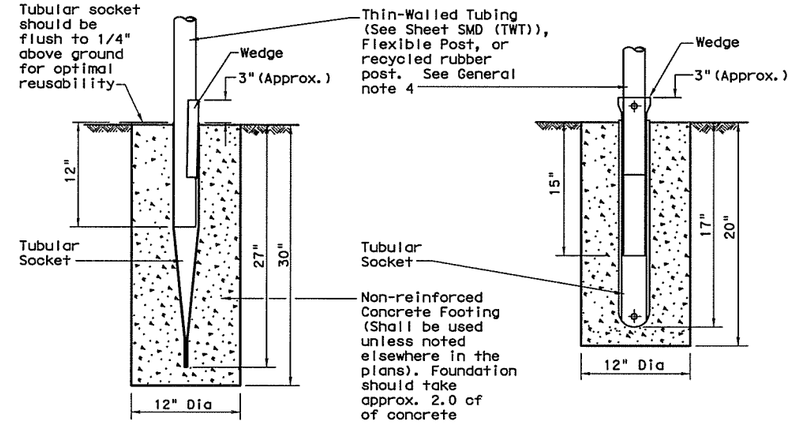

WEDGE ANCHOR STEEL SYSTEM

WEDGE ANCHOR PLASTIC (HDPE) SYSTEM

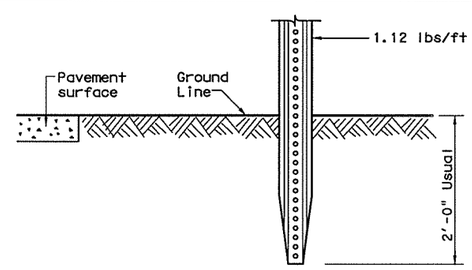

NOTE

Wing Channel post option may be used for Type 2 Object Markers and delineators only.

WING CHANNEL POST

GROUND MOUNT DETAILS

GENERAL NOTES

1. Place delineators on a section of roadway the same distance from the edge of pavement.
2. Where a restriction prevents consistent placement from the pavement edge, place the affected object markers in line with the innermost edge of the obstruction.
3. When object markers are more than 8'-0" from the edge of the pavement, it may not be possible to maintain a height of 4'-0"-4'-6". If this is the case, place the object markers as close to the desired height as possible.
4. Install all delineators, object markers and barrier reflectors in accordance with the manufacturer's recommendation.

DEPARTMENTAL MATERIAL SPECIFICATIONS	
FLEXIBLE DELINEATOR & OBJECT MARKER POSTS (DRIVEABLE & SURFACE MOUNT TYPES)	DMS-4400
SIGN FACE MATERIALS	DMS-8300
DELINEATORS AND OBJECT MARKERS	DMS-8600

Texas Department of Transportation
Traffic Operations Division

DELINEATOR & OBJECT MARKER INSTALLATION AND MATERIAL DESCRIPTION D & OM(1)-09

©TxDOT August 2004

DN: TXDOT	CK: TXDOT	DW: TXDOT	CK: TXDOT
CONT	SECT	JOB	HIGHWAY
DIST		COUNTY	SHEET NO. 38

REVISIONS
10-09

DATE:
FILE:

20A

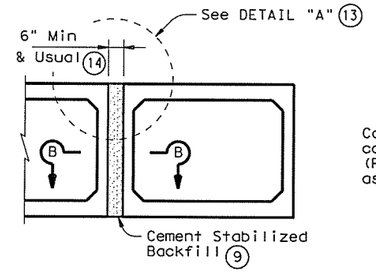

MULTIPLE UNIT PLACEMENT

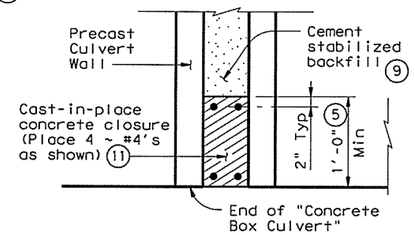

SECTION B-B

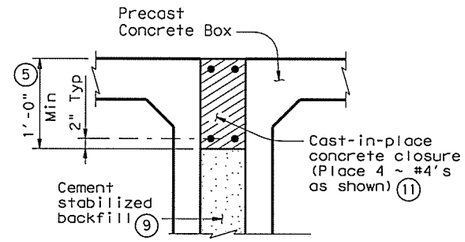

DETAIL "A" (13)

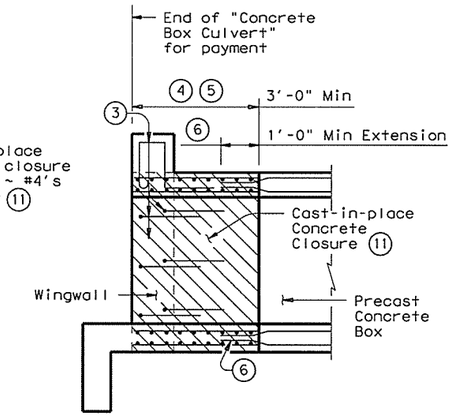

WINGWALL CONNECTION

(Also applies to Safety End Treatment)

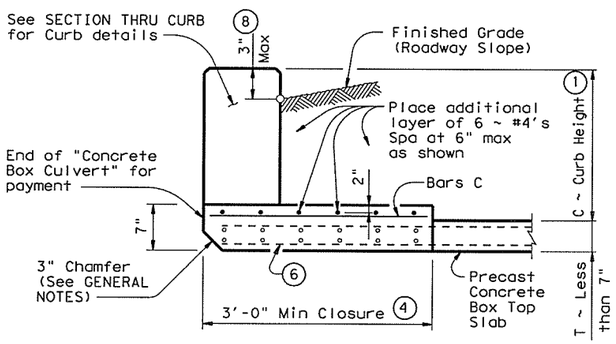

SECTION THRU TOP SLABS LESS THAN 7"

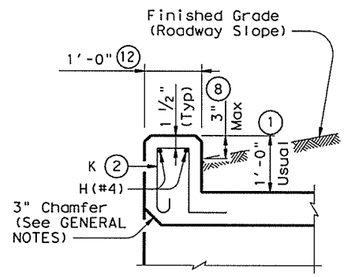

SECTION THRU CURB

(10) QUANTITIES PER FOOT OF CURB	
Reinforcing Steel	4.18 Lb
Concrete	0.037 CY

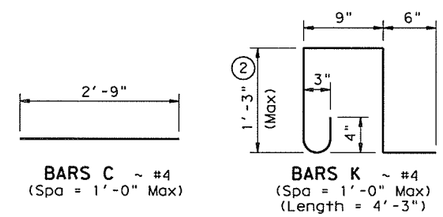

BARS C ~ #4
(Spa = 1'-0" Max)

BARS K ~ #4
(Spa = 1'-0" Max)
(Length = 4'-3")

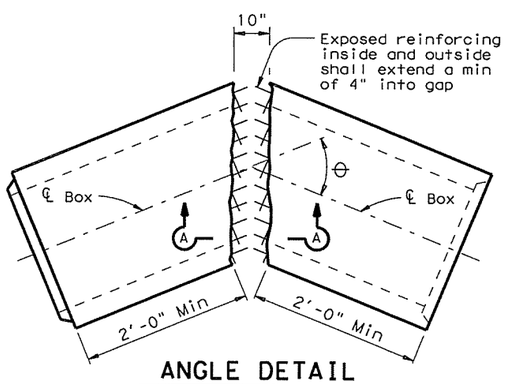

ANGLE DETAIL

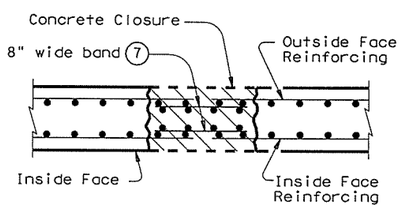

SECTION A-A

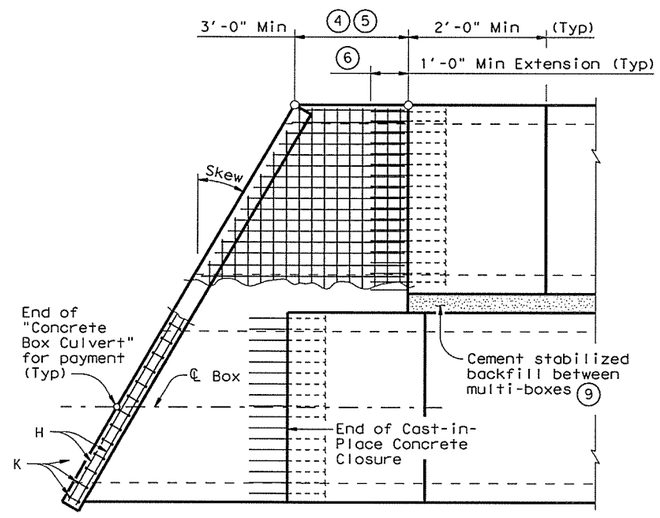

PLAN OF SKEWED ENDS

(Showing multi-box placement)

(1) 0" min to 5'-0" max. Estimated curb heights are shown elsewhere in the plans. For structures without railing and curbs taller than 1'-0", refer to ECD standard. For structures with T6 bridge rail, refer to T6-CM standard. For structures with bridge rail, other than T6, refer to RAC standard.

(2) For curbs less than 1'-0" high, tilt Bars K or reduce bar height as necessary to maintain cover. For curbs less than 3" high, Bars K may be omitted.

(3) Curb, Wingwall or Safety End Treatment reinforcing shall extend into concrete closure. Any reinforcing that does not fit into the closure shall be bent or trimmed as necessary.

(4) Cast-in-place concrete closure shall be 3'-0" min. Boxes shall be cast short or broken back in the field. All reinforcing in the closure shall be the same size and spacing as in the precast box section. Except where shown otherwise, the cast-in-place closure shall be flush with the inside and outside faces of the precast box section.

(5) For multiple unit placements the length of the closure for the interior walls may be adjusted as necessary. The length of the top slab, bottom slab, and exterior wall closure shall not be less than 3'-0". See Section B-B detail when interior walls are cast full length.

(6) Precast box reinforcing shall extend a minimum of 1'-0" into concrete closure (Typ).

(7) Bands of reinforcing matching the inside and outside face reinforcing shall be placed in the gaps of the top and bottom slabs. A band matching the outside face reinforcing of the wall shall be placed in the gaps of the walls (placed in the outside face only). The bands shall be tack welded to the exposed reinforcing at each point of contact.

(8) For vehicle safety, the following requirements must be met:
- For structures without bridge rail, curbs shall project no more than 3" above finished grade.
- For structures with bridge rail, curbs shall be flush with finished grade.

Curb heights shall be reduced, if necessary, to meet the above requirements. No changes will be made in quantities and no additional compensation will be allowed for this work.

(9) Cement Stabilized Backfill between boxes is considered part of the Box Culvert for payment.

(10) All curb concrete and reinforcing is considered part of the Box Culvert for payment.

(11) Any additional concrete and reinforcing required for the closures shall be considered as subsidiary to the Concrete Box Culvert.

(12) 1'-0" typical. 2'-0" when RAC standard is referred to elsewhere in the plans.

(13) For multiple unit placement with overlay, with 1 to 2 course surface treatment, or with the top slab as the final riding surface, provide wall closure as shown in DETAIL "A".

(14) This dimension may be increased with approval of the Engineer to allow the precast boxes to be tunneled or jacked in accordance with Item 476, "Jacking, Boring, or Tunneling Pipe or Box". No payment will be made for any additional material in the gap between adjacent boxes.

GENERAL NOTES:

Designed according to current AASHTO Standard and Interim Specifications.

All closure concrete shall be Class "C" with a minimum compressive strength of 3600 psi and shall be placed according to the Item, "Concrete Structures".

Any additional concrete required for the closures shall be considered as subsidiary to the Concrete Box Culvert.

Refer to the Single Box Culverts Precast standard for details not shown.

The bottom edge of the top slab closure shall be chamfered 3 inches at the entrance.

HS20 LOADING

DISCLAIMER:
The use of this standard is governed by the "Texas Engineering Practice Act". No warranty of any kind is made by TxDOT for any purpose whatsoever. TxDOT assumes no responsibility for the conversion of this standard to other formats or for incorrect results or damages resulting from its use.

ACC:

LEVELS DISPLAYED

1

Texas Department of Transportation
Bridge Division

BOX CULVERTS PRECAST MISCELLANEOUS DETAILS

SCP-MD

FILE: scpmdste.dgn	DN: GAF	CK: LMW	DW: BWH/TxDOT	CK: GAF
© TxDOT May 2005	DISTRICT	FEDERAL AID PROJECT		SHEET 39
REVISIONS 08-07: Bars H size.	COUNTY	CONTROL	SECT	JOB	HIGHWAY

TABLE OF DIMENSIONS & REINFORCING STEEL
(Wings for One Structure End)

Dimensions					Variable Reinforcing				Estimated Quantities (4) per ft of wing (2~Wings)		Estimated Quantities per ft of Toewall (1~Toewall)	
Maximum Wingwall Height Hw	W	X	Y	Z	Bars J1		Bars J2		Reinf (Lb/Ft)	Conc (CY/Ft)	Reinf (Lb/Ft)	Conc (CY/Ft)
					Size	Spa	Size	Spa				
2'-6"	2'-10"	10"	1'- 0"	7"	#4	1'-0"	#4	1'-0"	43.13	0.406	6.85	0.071
2'-9"	2'-10"	10"	1'- 0"	7"	#4	1'-0"	#4	1'-0"	43.80	0.424	6.85	0.071
3'-0"	2'-10"	10"	1'- 0"	7"	#4	1'-0"	#4	1'-0"	44.47	0.444	6.85	0.071
3'-3"	2'-10"	10"	1'- 0"	7"	#4	1'-0"	#4	1'-0"	47.81	0.462	6.85	0.071
3'-6"	2'-10"	10"	1'- 0"	7"	#4	1'-0"	#4	1'-0"	48.48	0.480	6.85	0.071
4'-0"	3'- 2"	1'- 2"	1'- 0"	7"	#4	1'-0"	#4	1'-0"	50.26	0.532	6.85	0.071
4'-6"	3'- 2"	1'- 2"	1'- 0"	7"	#4	1'-0"	#4	1'-0"	54.27	0.568	6.85	0.071
5'-0"	3'- 9"	1'- 7"	1'- 2"	7"	#4	1'-0"	#4	1'-0"	57.94	0.632	6.96	0.075
5'-6"	3'- 9"	1'- 7"	1'- 2"	7"	#4	1'-0"	#4	1'-0"	61.95	0.668	6.96	0.075
6'-0"	4'- 4"	2'- 0"	1'- 4"	7"	#5	1'-0"	#5	1'-0"	75.16	0.730	7.07	0.078
6'-6"	4'- 4"	2'- 0"	1'- 4"	7"	#5	1'-0"	#5	1'-0"	79.54	0.768	7.07	0.078
7'-0"	5'- 0"	2'- 3"	1'- 9"	8"	#5	1'-0"	#5	1'-0"	86.65	0.864	8.07	0.093
7'-6"	5'- 0"	2'- 3"	1'- 9"	8"	#5	1'-0"	#5	1'-0"	91.03	0.902	8.07	0.093
8'-0"	5'- 6"	2'- 8"	1'-10"	8"	#5	6"	#5	6"	133.54	0.962	8.13	0.095
8'-6"	5'- 6"	2'- 8"	1'-10"	8"	#5	6"	#5	6"	138.96	1.000	8.13	0.095
9'-6"	6'- 0"	2'-10"	2'- 2"	9"	#5	6"	#5	6"	151.43	1.136	8.41	0.110
10'-6"	6'- 5"	3'- 0"	2'- 5"	9"	#6	6"	#5	6"	190.76	1.234	8.57	0.117
11'-6"	7'- 2"	3'- 6"	2'- 8"	11"	#6	6"	#6	6"	224.62	1.438	9.52	0.140
12'-6"	7'- 8"	3'- 9"	2'-11"	1'- 0"	#7	6"	#6	6"	277.90	1.592	9.74	0.157
13'-6"	8'- 2"	4'- 0"	3'- 2"	1'- 2"	#8	6"	#6	6"	343.21	1.804	10.02	0.186
14'-6"	8'-10"	4'- 5"	3'- 5"	1'- 4"	#9	6"	#6	6"	427.43	2.046	10.30	0.218
15'-6"	9'- 6"	4'-10"	3'- 8"	1'- 6"	#9	6"	#7	6"	484.01	2.302	11.24	0.253
16'-0"	9'-11"	5'- 0"	3'-11"	1'- 7"	#9	6"	#7	6"	500.21	2.448	11.47	0.279

TABLE OF WINGWALL REINFORCING (2~Wings)

Bar	Size	No.	Spa
D1	#6	~	1'-0"
D2	#6	~	1'-0"
E1	#4	~	1'-0"
F	#4	~	1'-0"
G	#6	~	1'-0"
M1	#4	4	~
P	#4	~	1'-0"
V	#4	~	1'-0"

TABLE OF TOEWALL REINFORCING

Bar	Size	No	Spa
J3	#4	~	1'-0"
M2	#4	2	~
E2	#4	~	1'-0"

WING DIMENSION CALCULATIONS:

Formulas: (All values are in Feet)

Hw = H + T + C

Lw = (Hw) (SL) ÷ Cosine (V)

For Cast-in-place culverts:

Ltw = [(N) (S) + (N + 1) (U)] ÷ (Cosine V)

For Precast culverts:

Ltw = [(N) (2 U + S) + (N − 1) (0.5')] ÷ (Cosine V)

Total Wingwall Area (Two Wings ~ S.F.) = (2) (Hw) (Lw)

Hw = Height of Wingwall
Lw = Length of Wingwall
Ltw = Culvert Toewall Length
N = Number of Culvert Spans
SL:1 = Channel Slope ratio. (Horizontal: 1 Vertical, Usual value is 2:1)
V = Culvert Skew

See applicable box culvert standard for S, H, T and U values.

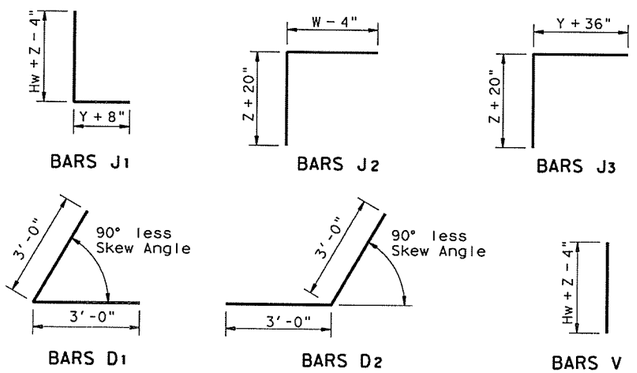

1. Skew Angle = 0°
2. At discharge end, chamfer may be ¾".
3. For 15° Skew ~ 1"
   For 30° Skew ~ 2"
   For 45° Skew ~ 3"
4. Quantities shown are for two wings. To determine total quantities for two wings, multiply the tabulated values by Lw.
5. Provide weepholes for Hw = 5'-0" and greater. Fill around weepholes with coarse gravel.
6. Extend Bars E1 1'-6" minimum into the bottom slab of the culvert.
7. Lap Bars M1 1'-6" minimum with Bars M2.
8. Bars G shall be equally spaced at 8" maximum, placed as shown. There shall be at least 4 Bars G per wing.
9. 0" min to 5'-0" max. For T6 or C6 Rail, see T6-CM standard for additional details. For all other rail types, refer to the RAC standard. For curbs without rail and greater than 1'-0" high, see ECD standard for additional details. Estimated curb heights are shown elsewhere in the plans.
10. For vehicle safety, the following requirements must be met:
    - For structures without bridge rail, curbs shall project no more than 3" above finished grade.
    - For structures with bridge rail, curbs shall be flush with finished grade.

    Curb heights shall be reduced, if necessary, to meet the above requirements. No changes will be made in quantities and no additional compensation will be allowed for this work.
11. 1'-0" typical. 2'-0" typical when RAC standard is referenced elsewhere in the plans.

GENERAL NOTES:

Designed according to current AASHTO Standard and Interim Specifications.

All reinforcing steel shall be Grade 60.

All concrete shall be Class "C" and shall have a minimum compressive strength of 3600 psi.

All reinforcing bars shall be adjusted to provide a minimum of 1 ¼" clear cover.

When structure is founded on solid rock, depth of toewalls for culverts and wingwalls may be reduced or eliminated as directed by the Engineer.

See BCS sheet for additional dimensions and information.

The quantities for concrete and reinforcing steel resulting from the formulas given on this sheet are for Contractor's information only.

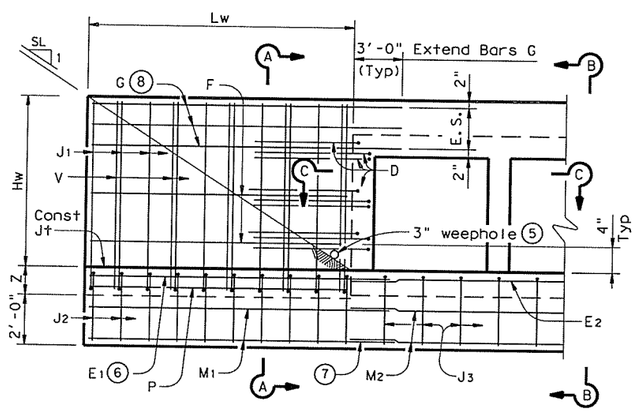

PARTIAL ELEVATION

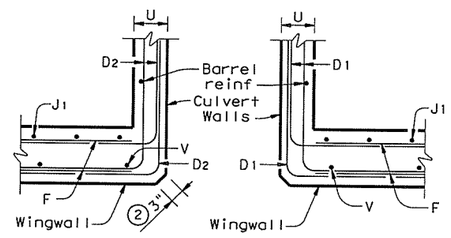

SECTION C-C

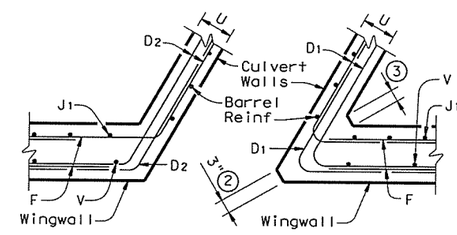

SECTION C-C

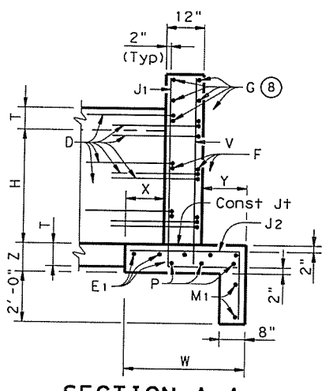

SECTION A-A
(Showing Wing Reinf)

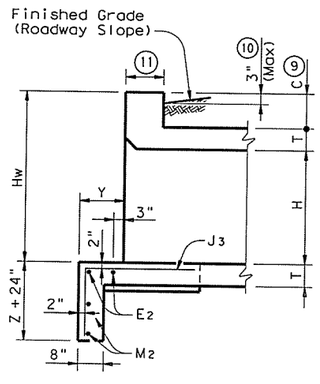

SECTION B-B
(Showing Toewall Reinf)

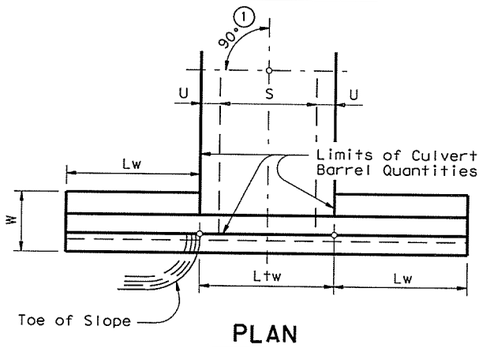

PLAN

DETAILS FOR NON-SKEWED BOX CULVERTS

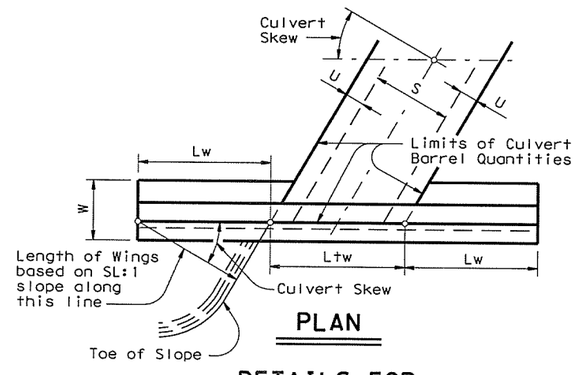

PLAN

DETAILS FOR SKEWED BOX CULVERTS
(Showing 30° Skew)

Texas Department of Transportation
Bridge Division

CONCRETE WINGWALLS
WITH PARALLEL WINGS FOR SKEWED AND NON-SKEWED BOX CULVERTS

PW

FILE: pwstde01.dgn	DN: GAF	CK: CAT	DW: TxDOT	CK: GAF
© TxDOT May 2005	DISTRICT	FEDERAL AID PROJECT		SHEET 40
REVISIONS 08-07: Size & No. of Bars D. Size & Lgth of Bars G.	COUNTY	CONTROL	SECT / JOB	HIGHWAY

DISCLAIMER:
The use of this standard is governed by the "Texas Engineering Practice Act". No warranty of any kind is made by TxDOT for any purpose whatsoever. TxDOT assumes no responsibility for the conversion of this standard to other formats or for incorrect results or damages resulting from its use.

ACC:
LEVELS DISPLAYED

SITE DESCRIPTION

PROJECT NAME AND LOCATION: MEMORIAL LANE RECONSTRUCTION PROJECT
875' EAST OF US 281 TO LITTLE WALNUT DRIVE
N 13,616,564.03 E 2,135,417.54 TO
N 13,617,491.09 E 2,137,419.46

CONTACT AND PHONE NO.: BEXAR COUNTY PUBLIC WORKS DEPARTMENT
210-335-6700

PROJECT DESCRIPTION: CONSTRUCTION OF AN UNDESIGNED SAND ROADWAY TO A 2 LANE ROADWAY WITH 4' SHOULDERS, DITCHES AND DRIVEWAY PIPES

MAJOR SOIL DISTURBING ACTIVITIES: OBLITERATION OF EXISTING ROADWAY, PREPARING RIGHT OF WAY, GRADING,EXCAVATION AND EMBANKMENT FOR THE ROADWAY, EROSION CONTROL AND TOPSOIL WORK.

TOTAL PROJECT AREA (ACRES): 3.51 ACRES

TOTAL AREA TO BE DISTURBED: 3.51 ACRES

WEIGHTED RUNOFF COEFFICIENT: (AFTER CONSTRUCTION) 0.68

EXISTING CONDITION OF SOIL, VEGETATIVE COVER AND % OF VEGETATIVE COVER: UNDISTURBED, VEGETATIVE COVER WITH GRASS AND SHRUBS

DESCRIPTION OF WATER DISCHARGED NOT ASSOCIATED WITH CONSTRUCTION: N /A

NAME OF RECEIVING WATERS: UN-NAMED TRIBUTARY FLOWING TO THE SAN ANTONIO RIVER

IDENTIFY STORMWATER DISCHARGE POINTS: SWALE IN ROADWAY AT STA. 10+45.51

A DESCRIPTION AND TIME FRAME FOR INSTALLATION OF STABILIZATION PRACTICES IN CONJUNCTION WITH CONSTRUCTION: REFER TO SW3P LAYOUT

EROSION AND SEDIMENTATION CONTROLS

SOIL STABILIZATION PRACTICES:

X HYDROMULCHING
___ TEMPORARY SEEDING
___ PERMANENT PLANTING, SODDING OR SEEDING
___ MULCHING
___ SOIL RETENTION BLANKET
___ BUFFER ZONES
___ PRESERVATION OF NATURAL RESOURSES

OTHER:

DISTURBED AREAS ON WHICH CONSTRUCTION ACTIVITY HAS CEASED TEMPORARILY OR PERMANENTLY, SHALL BE STABILIZED WITHIN 14 DAYS UNLESS ACTIVITIES ARE SCHEDULED TO RESUME AND DONE WITHIN 21 DAYS.

STRUCTURAL PRACTICES:

X SILT FENCES
___ HAY BALES
___ GRAVEL FILTRATION BAGS
X ROCK BERMS
___ DIVERSION, INTERCEPTOR OR PERIMETER DIKES
___ DIVERSION, INTERCEPTOR OR PERIMETER SWALES
___ DIVERSION, DIKE AND SWALE COMBINATIONS
___ PAVED FLUMES
___ ROCK BEDDING AT CONSTRUCTION EXIT (STABILIZED ENTRANCE)
___ TIMBER MATTING AT CONSTRUCTION EXIT (STABILIZED ENTRANCE)
___ CHANNEL LINERS
___ SEDIMENT TRAPS
___ SEDIMENT BASINS
___ STORM INLET SEDIMENT TRAP
___ STONE OUTLET SEDIMENT STRUCTURES
___ CURBS AND GUTTERS
___ STORM SEWERS
___ VELOCITY CONTROL STRUCTURES
___ GEOTEXTILES

OTHER:

NARRATIVE - SEQUENCE OF CONSTRUCTION (STORMWATER MANAGEMENT) ACTIVITIES:
THE ORDER OF ACTIVITIES WILL BE AS FOLLOWS: PROJECT WILL BE CONSTRUCTED IN A SINGLE PHASE

A DESCRIPTION OF MAINTENANCE PROCEDURES FOR CONTROL MEASURES USED:

STORMWATER MANAGEMENT: STORM WATER TO BE CONVEYED VIA ROADSIDE DITCHES

A DESCRIPTION OF PERMANENT STORM WATER MANAGEMENT CONTROLS: N /A

OTHER EROSION AND SEDIMENTATION CONTROLS

MAINTENANCE:

ALL EROSION AND SEDIMENT CONTROLS WILL BE MAINTAINED IN GOOD WORKING ORDER. IF A REPAIR IS NECESSARY, IT WILL BE DONE AT THE EARLIEST DATE POSSIBLE, BUT NO LATER THAN 7 CALENDAR DAYS AFTER THE SURROUNDING EXPOSED GROUND HAS DRIED SUFFICIENTLY TO PREVENT FURTHER DAMAGE FROM HEAVY EQUIPMENT. THE AREAS ADJACENT TO CREEKS AND DRAINAGEWAYS SHALL HAVE PRIORITY, FOLLOWED BY DEVICES PROTECTING STORM SEWER INLETS.

INSPECTION:

AN INSPECTION WILL BE PERFORMED BY THE CONTRACTOR EVERY 14 DAYS AS WELL AS AFTER EVERY 1/2" OR MORE OF RAIN (RECORDED ON A NON-FREEZING RAIN GAUGE TO BE LOCATED AT THE PROJECT SITE). AN INSPECTION AND MAINTENANCE REPORT WILL BE MADE PER INSPECTION. BASED ON THE INSPECTION RESULTS, THE CONTROLS SHALL BE CORRECTED BEFORE THE NEXT SCHEDULED INSPECTION.

WASTE MATERIALS:

ALL WASTE MATERIALS WILL BE COLLECTED AND STORED IN A SECURELY LIDDED METAL DUMPSTER. THE DUMPSTER WILL MEET ALL STATE AND LOCAL CITY SOLID WASTE MANAGEMENT REGULATIONS. ALL TRASH AND CONSTRUCTION DEBRIS FROM THE SITE WILL BE DEPOSITED IN THE DUMPSTER. THE DUMPSTER WILL BE EMPTIED AS NECESSARY OR AS REQUIRED BY LOCAL REGULATION AND THE TRASH WILL BE HAULED TO A LOCAL DUMP. NO CONSTRUCTION MATERIALS WILL BE BURIED ON SITE.

HAZARDOUS WASTE (INCLUDING SPILL REPORTING):

AT A MINIMUM, ANY PRODUCTS IN THE FOLLOWING CATEGORIES ARE CONSIDERED TO BE HAZARDOUS: PAINTS, ACIDS FOR CLEANING MASONRY SURFACES, GASOLINE, MOTOR OIL, CLEANING SOLVENTS, ASPHALT PRODUCTS, CHEMICAL ADDITIVES FOR SOIL STABILIZATION OR CONCRETE CURING COMPOUNDS AND ADDITIVES. IN THE EVENT OF A SPILL WHICH MAY BE HAZARDOUS AND MEETS REPORTING REQUIREMENTS, THE NATIONAL RESPONSE CENTER SHOULD BE CONTACTED AT 800-424-8802, AND ANY REQUIRED CHANGES MADE TO THE SWPPP. IN THE EVENT OF A LIFE THREATENING SPILL THE SAN ANTONIO FIRE DEPARTMENT SHOULD BE NOTIFIED AS WELL AS THE APPROPRIATE CITY INSPECTORS.

SANITARY WASTE N /A

OFFSITE EXCAVATION SOURCE LOCATION N /A

OFFSITE FILL SOURCE LOCATION N /A

OFFSITE VEHICLE TRACKING STABILIZED CONSTRUCTION ENTRANCE /EXITS

X HAUL ROADS DAMPENED FOR DUST CONTROL.
X LOADED HAUL TRUCKS TO BE COVERED WITH TARPAULIN
X EXCESS DIRT ON ROAD TO BE REMOVED DAILY
X STABILIZED CONSTRUCTION ENTRANCE.

OTHER:

CERTIFICATION THAT SITE DISTURBANCE AND / OR DISCHARGES WILL NOT EFFECT LISTED ENDANGERED SPECIES AND THEIR HABITAT.
WHAT METHOD IS USED TO SATISFY THE ENDANGERED SPECIES REQUIREMENTS? N /A

REMARKS:

DISPOSAL AREAS, STOCKPILES AND HAUL ROADS SHALL BE CONSTRUCTED IN A MANNER THAT WILL MINIMIZE AND CONTROL THE AMOUNT OF SEDIMENT THAT ENTERS RECEIVING WATERS. DISPOSAL AREAS SHALL NOT BE LOCATED IN ANY WETLAND, BODY OF WATER, STREAMBED OR FLOODPLAIN. CONSTRUCTION STAGING AREAS AND VEHICLE MAINTENANCE AREAS SHALL BE CONSTRUCTED BY THE CONTRACTOR IN A MANNER TO MINIMIZE THE RUNOFF OF POLLUTANTS. ALL WATERWAYS SHALL BE CLEARED AS SOON AS POSSIBLE OF TEMPORARY EMBANKMENT, TEMPORARY BRIDGES, MATTING, FALSEWORK, PILING DEBRIS OR OTHER OBSTRUCTION PLACED DURING CONSTRUCTION OPERATIONS THAT ARE NOT PART OF THE FINISHED WORK.

Reginald Fountain P.E.
10/30/09

STATE OF TEXAS
REGINALD FOUNTAIN
97328
LICENSED
PROFESSIONAL ENGINEER

JANUARY 2005

STANDARD PLANS
CITY OF SAN ANTONIO, TEXAS
DEPARTMENT OF PUBLIC WORKS

STORM WATER POLUTION PREVENTION PLAN (SWP3) NARRATIVE

DRAWN BY: V. VASQUEZ	DATE	REVISIONS	SCALE:
CHECKED BY: NAT HARDY, P.E.			DATE:
			SHEET: 41 OF 62

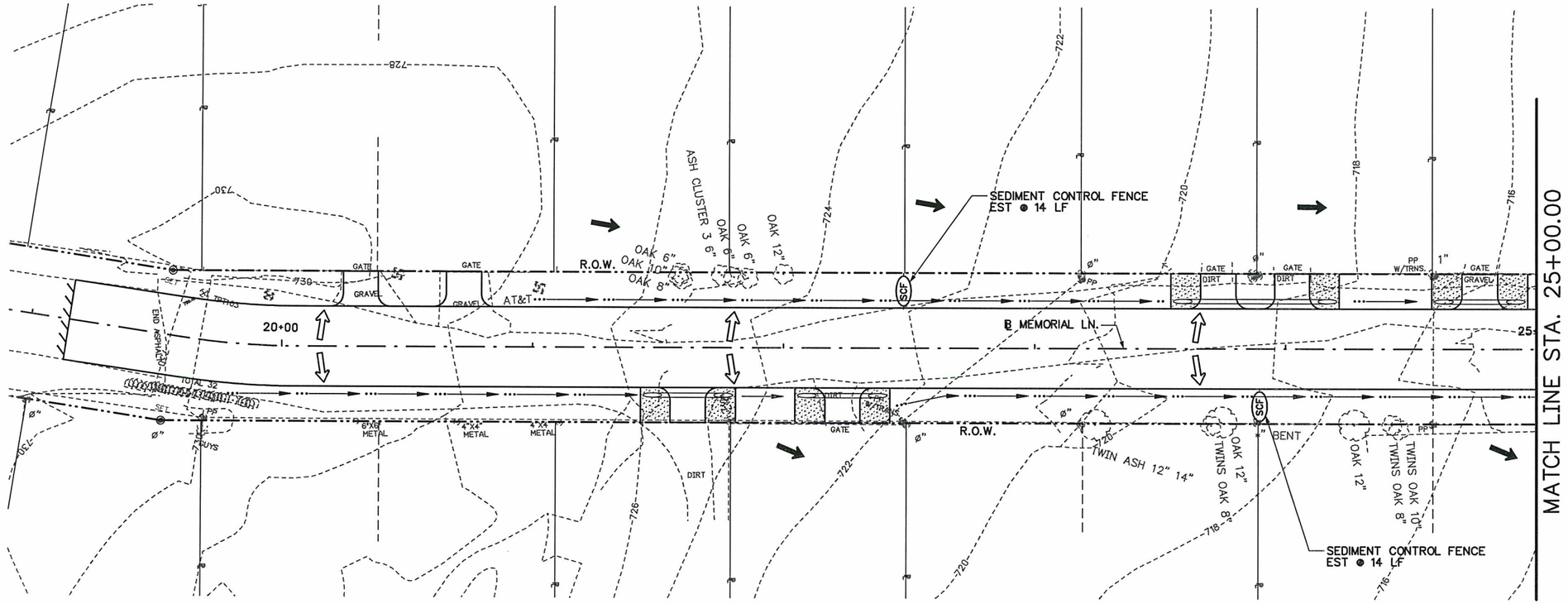

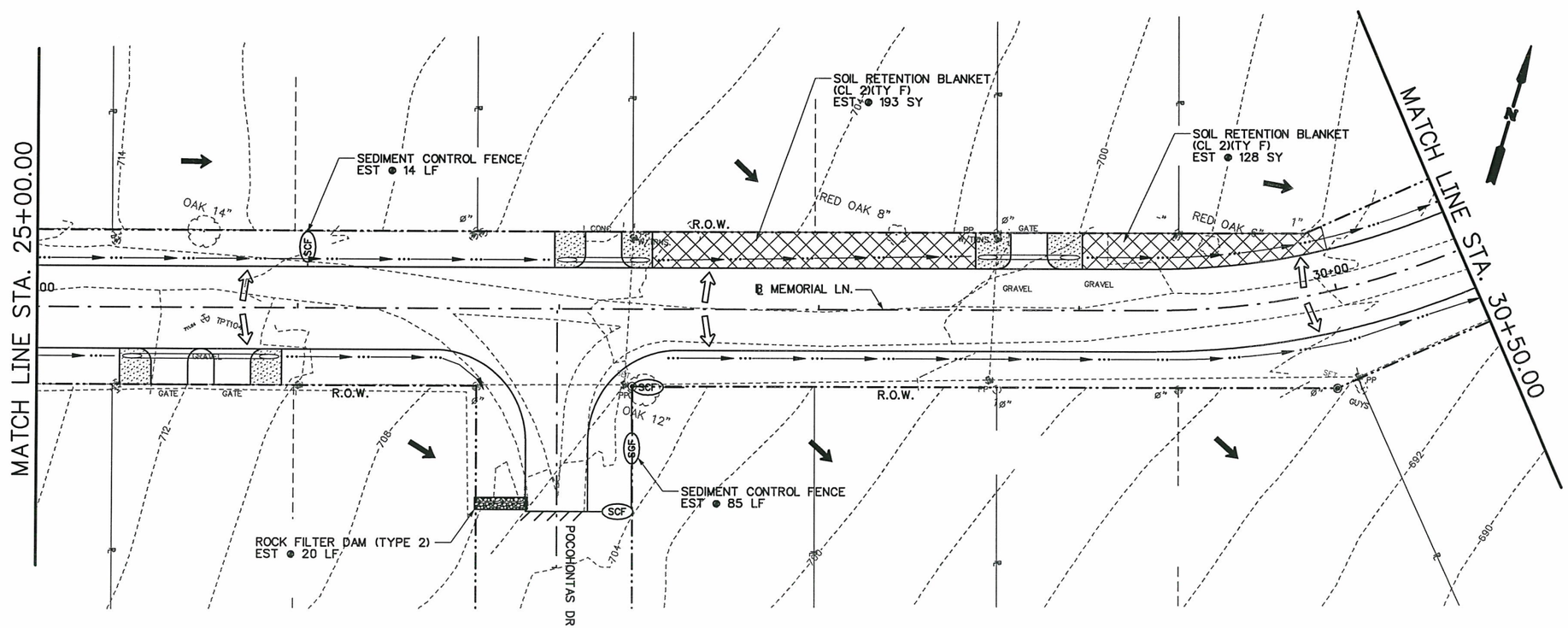

25 12.5 0 25 50
SCALE FEET

LEGEND

- SEDIMENT CONTROL FENCE
- ROCK FILTER DAM (TY 2)
- SOIL RETENTION BLANKET (CL 2)(TY F)
- DRAINAGE FLOW DIRECTION (ROADWAY)
- DRAINAGE FLOW DIRECTION (OUTSIDE R.O.W.)

NOTE:

1. CONTRACTOR TO BLOCK SOD FROM EDGE OF PAVEMENT TO R.O.W.

2. CONSTRUCTION EXIT (TY 1) LOCATIONS WILL BE DETERMINED IN THE FIELD BY THE ENGINEER AND APPROVED BY THE COUNTY CONSTRUCTION INSPECTOR. THE SIZE OF THE CONSTRUCTION EXIT WILL BE 78 SY (50'X14'), REFER TO STATE STANDARD "EC (3)-93" FOR DETAILS.

Reginald Fountain PE
10/31/09

STATE OF TEXAS
REGINALD FOUNTAIN
97328
LICENSED
PROFESSIONAL ENGINEER

NO.	REVISION	BY	DATE

CP&Y
TBPE FIRM REGISTRATION NO: 1741

BEXAR COUNTY
PUBLIC WORKS DIVISION

HIGHLAND OAKS SUBDIVISION–MEMORIAL LANE

SW3P LAYOUT

BEGIN PROJECT TO STA. 30+50.00

SHEET 1 OF 2

Designed: RTF	STATE	BEXAR COUNTY FILE NUMBER	PLAN SET NO.
Checked: JA	TEXAS		42
Drawn: RTF	COUNTY		OF
Checked: JA	BEXAR		62

C:\PWWorking\jserna\d0101294\8047SW3P01.050
10/29/2009 4:04:04 PM

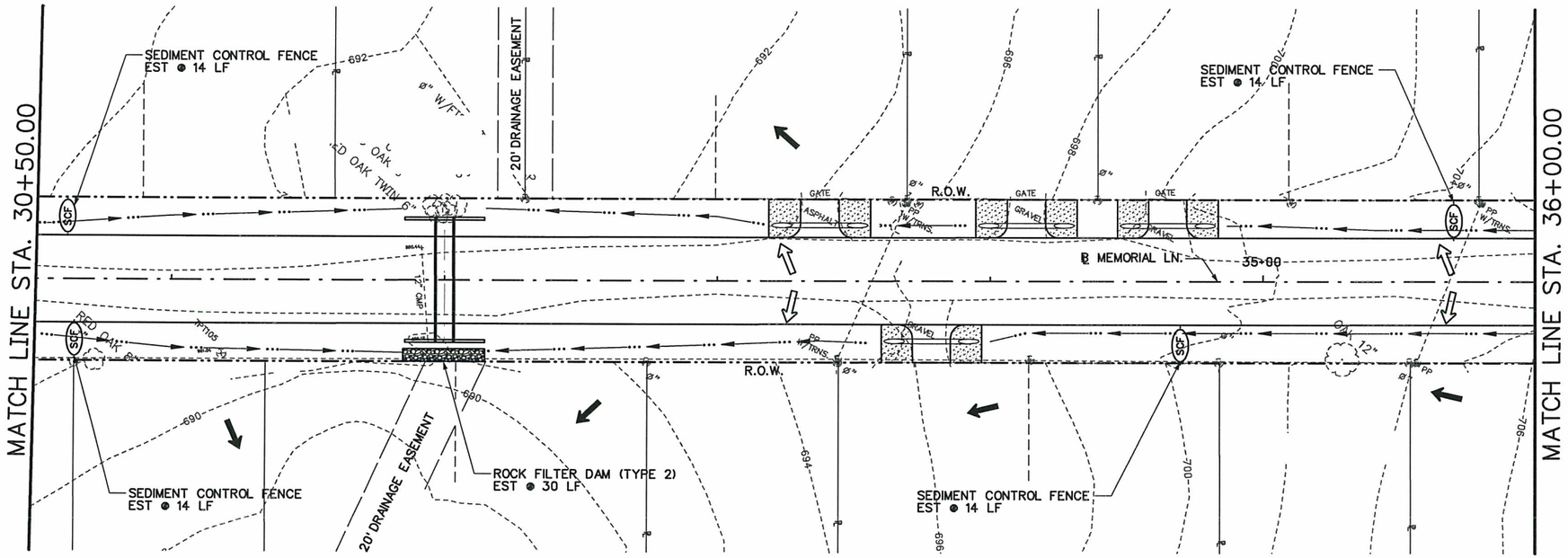

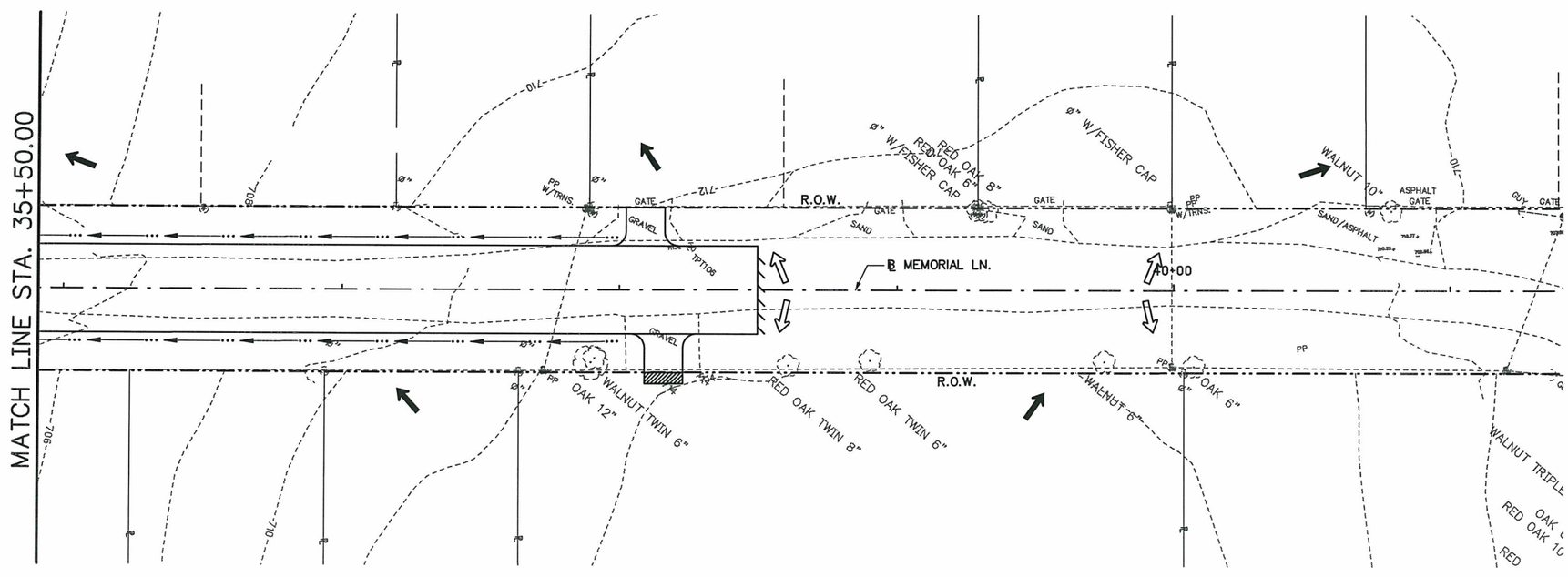

25 12.5 0 25 50
SCALE FEET

LEGEND

- SCF — SEDIMENT CONTROL FENCE
- ROCK FILTER DAM (TY 2)
- SOIL RETENTION BLANKET (CL 2)(TY F)
- DRAINAGE FLOW DIRECTION (ROADWAY)
- DRAINAGE FLOW DIRECTION (OUTSIDE R.O.W.)

NOTE:

1.CONTRACTOR TO BLOCK SOD FROM EDGE OF PAVEMENT TO R.O.W.

2.CONSTRUCTION EXIT (TY 1) LOCATIONS WILL BE DETERMINED IN THE FIELD BY THE ENGINEER AND APPROVED BY THE COUNTY CONSTRUCTION INSPECTOR. THE SIZE OF THE CONSTRUCTION EXIT WILL BE 78 SY (50'X14'), REFER TO STATE STANDARD "EC (3)-93" FOR DETAILS.

Reginald Fountain 10/30/09

STATE OF TEXAS
REGINALD FOUNTAIN
97328
LICENSED
PROFESSIONAL ENGINEER

NO.	REVISION	BY	DATE

CP&Y
TBPE FIRM REGISTRATION NO: 1741

BEXAR COUNTY
PUBLIC WORKS DIVISION

HIGHLAND OAKS SUBDIVISION–MEMORIAL LANE

SW3P LAYOUT

STA. 30+50.00 TO END PROJECT

SHEET 2 OF 2

Designed: RTF	STATE	BEXAR COUNTY FILE NUMBER	PLAN SET NO.
Checked: JA	TEXAS		43
Drawn: RTF	COUNTY		OF
Checked: JA	BEXAR		62

C:\PWWorking\jaerne\d0101294\B047SW3P02.DGN
10/29/2009
4:04:27 PM

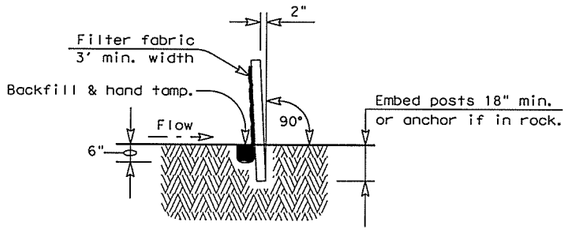

SECTION A-A

GENERAL NOTES

1. The guidelines shown hereon are suggestions only and may be modified by the Engineer.

PLAN SHEET LEGEND

Sediment Control Fence —— SCF ——

SEDIMENT CONTROL FENCE USAGE GUIDELINES

A sediment control fence may be constructed near the downstream perimeter of a disturbed area along a contour to intercept sediment from overland runoff. A 2 year storm frequency may be used to calculate the flow rate to be filtered.

Sediment control fence should be sized to filter a max. flow through rate of 100 GPM/FT^2. Sediment control fence is not recommended to control erosion from a drainage area larger than 2 acres.

Galv. Hinge joint knot woven mesh (12.5 Ga. Min.) requires a minimum of five horizontal wires spaced at a max. 12 inches apart and all vertical wires spaced at a max. 12 inches apart.

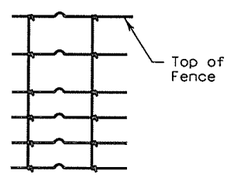

Hinge Joint Knot Woven Mesh (Option)

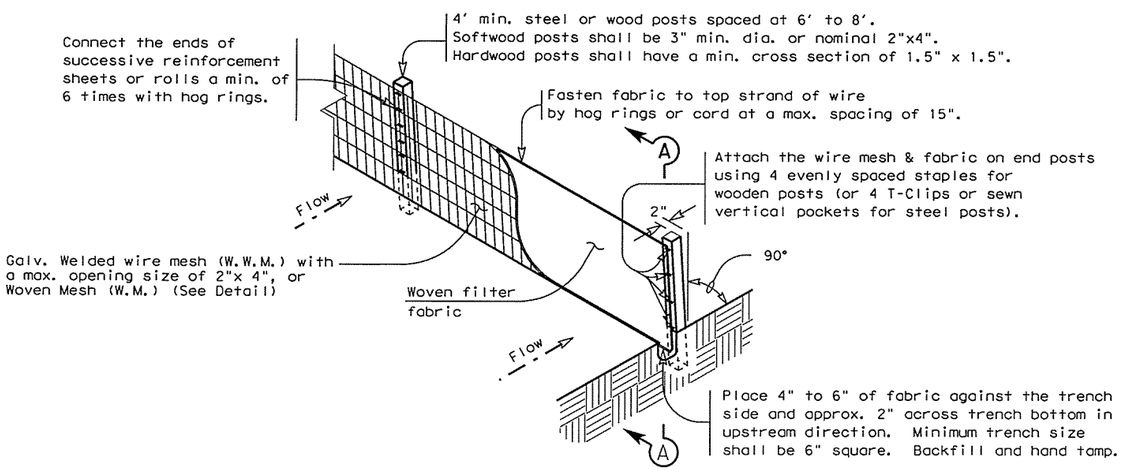

TEMPORARY SEDIMENT CONTROL FENCE

SCF

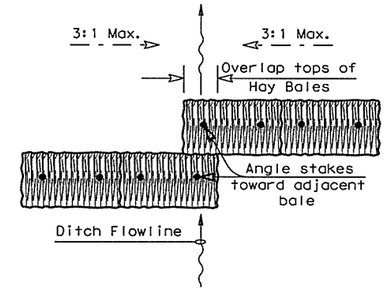

PLAN VIEW

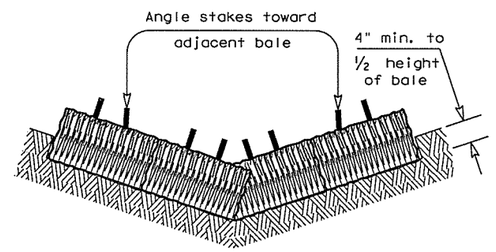

PROFILE VIEW

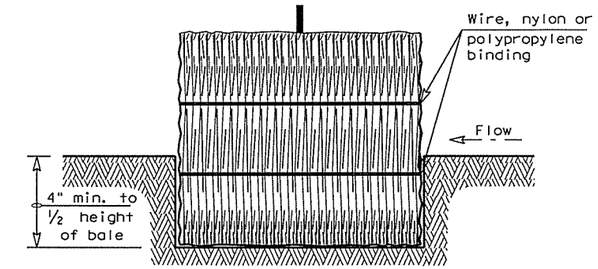

SECTION B-B

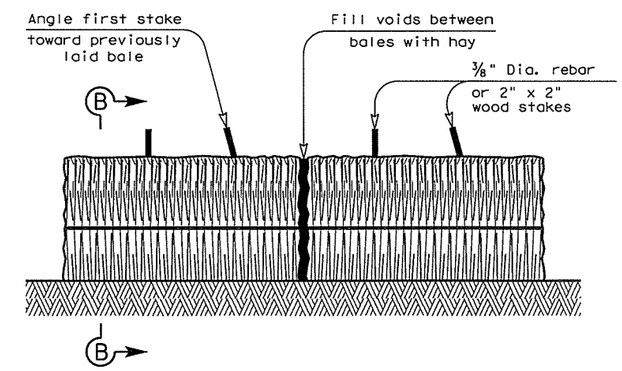

BALED HAY FOR EROSION CONTROL

BH

PLANS SHEET LEGEND

Baled Hay —— BH ——

GENERAL NOTES

1. Hay bales shall be a minimum of 30" in length and weigh a minimum of 50 Lbs.
2. Hay bales shall be bound by either wire or nylon or polypropylene string. The bales shall be composed entirely of vegetative matter.
3. Hay bales shall be embedded in the soil a minimum of 4" and where possible ½ the height of the bale.
4. Hay bales shall be placed in a row with ends tightly abutting the adjacent bales. The bales shall be placed with bindings parallel to the ground.
5. Hay bales shall be securely anchored in place with ⅜" Dia. rebar or 2" x 2" wood stakes, driven through the bales. The first stake shall be angled towards the previously laid bale to force the bales together.
6. The guidelines shown hereon are suggestions only and may be modified by the Engineer.

BALED HAY USAGE GUIDELINES

A Baled Hay installation may be constructed near the downstream perimeter of a disturbed area along a contour to intercept sediment from overland runoff. A two year storm frequency may be used to calculate the flow rate to be filtered. The installation should be sized to filter a maximum flow thru rate of 5 GPM/FT^2 of cross sectional area. Baled hay may be used at the following locations:

1. Where the runoff approaching the baled hay flows over disturbed soil for less than 100'. If the slope of the disturbed soil exceeds 10%, the length of slope upstream the baled hay should be less than 50'.
2. Where the installation will be required for less than 3 months.
3. Where the contributing drainage area is less than ½ acre.

For Baled Hay installations in small ditches, the additional following considerations apply:

1. The ditch sideslopes should be graded as flat as possible to maximize the drainage flowrate thru the hay.
2. The ditch should be graded large enough to contain the overtopping drainage when sediment has filled to the top of the baled hay.

Bales should be replaced usually every 2 months or more often during wet weather when loss of structural integrity is accelerated.

DISCLAIMER:
The use of this standard is governed by the "Texas Engineering Practice Act". No warranty of any kind is made by TxDOT for any purpose whatsoever. TxDOT assumes no responsibility for the conversion of this standard to other formats or for incorrect results or damages resulting from its use.

LEVELS DISPLAYED

Texas Department of Transportation
Design Division (Roadway)

TEMPORARY EROSION, SEDIMENT AND WATER POLLUTION CONTROL MEASURES

FENCE & BALED HAY

EC(1)-09

FILE: ec109.dgn	DN: HEJ	CK: HEJ	DW: BGD / TV	CK:	
© TxDOT JUNE 1993	DISTRICT	FEDERAL AID PROJECT			SHEET 44
REVISIONS Language added to the end of the standard sheet note for silt fence to allow for the use of the new backing.	COUNTY		CONTROL	SECT	JOB	HIGHWAY

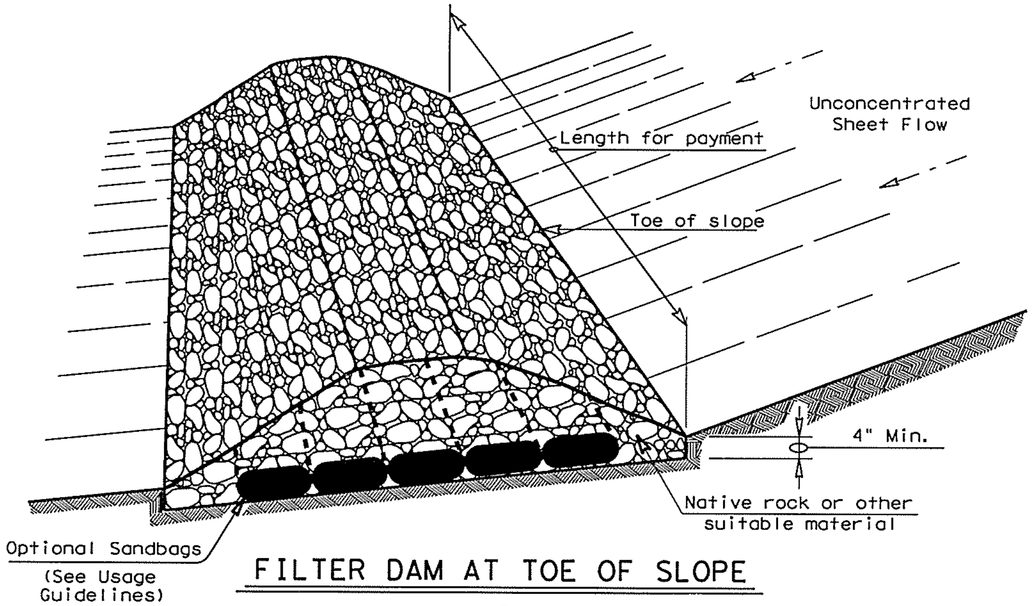

FILTER DAM AT TOE OF SLOPE

(RFD1)
TYPE 1

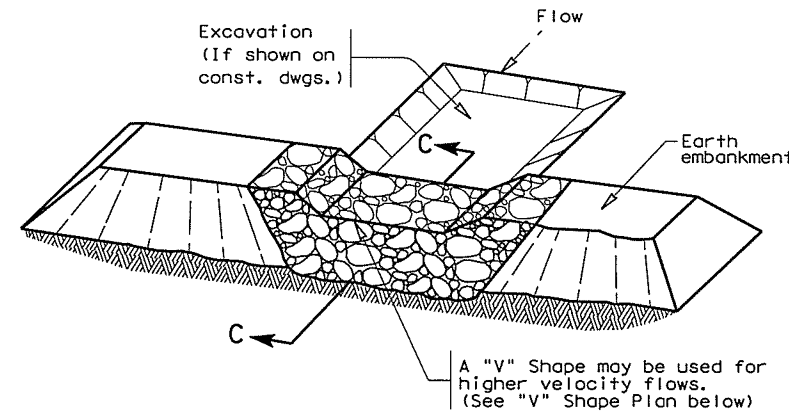

FILTER DAM AT SEDIMENT TRAP

(RFD1) OR (RFD2)
TYPE 1 OR TYPE 2

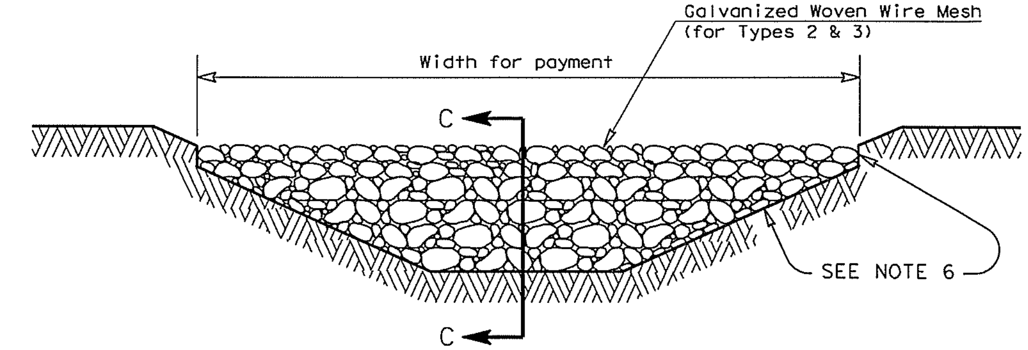

FILTER DAM AT CHANNEL SECTIONS

(RFD1) OR (RFD2) OR (RFD3)
TYPE 1 OR TYPE 2

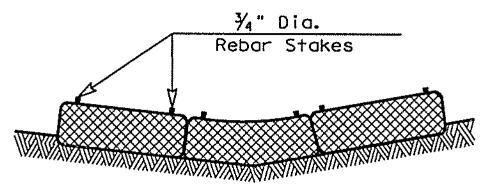

SECTION B-B

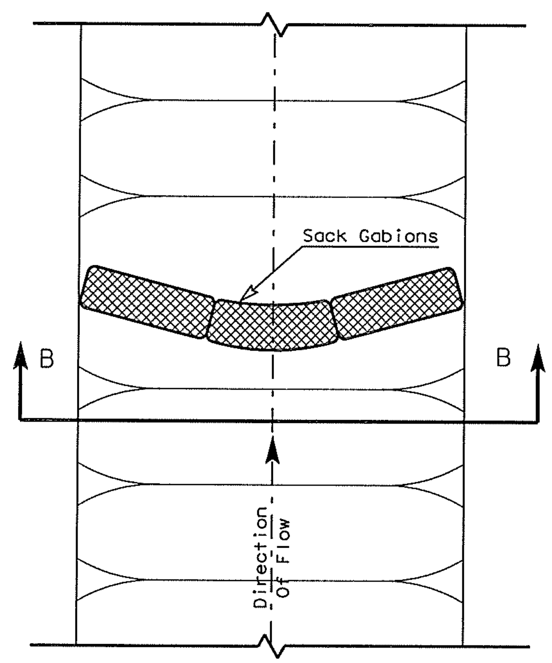

PLAN VIEW

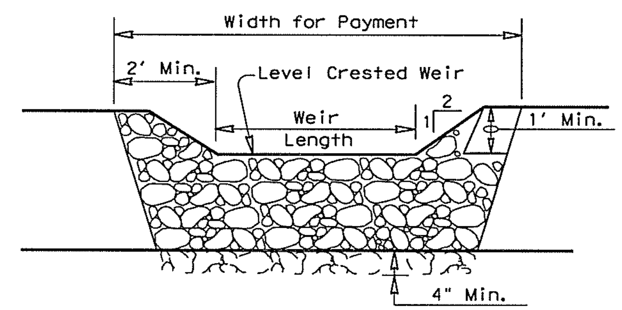

PROFILE

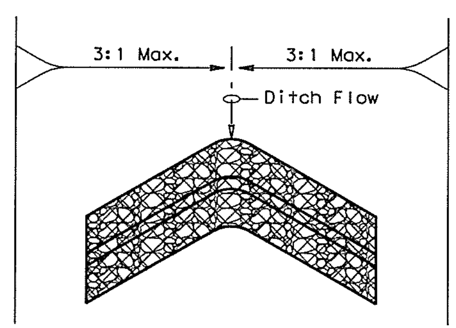

"V" SHAPE
(Plan View)

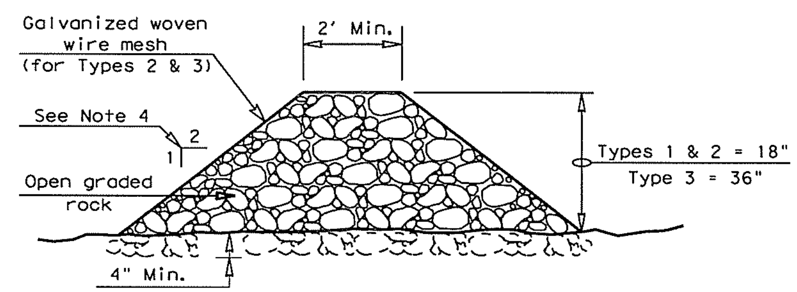

SECTION C-C

PLANS SHEET LEGEND

Type 1 Rock Filter Dam (RFD1)
Type 2 Rock Filter Dam (RFD2)
Type 3 Rock Filter Dam (RFD3)

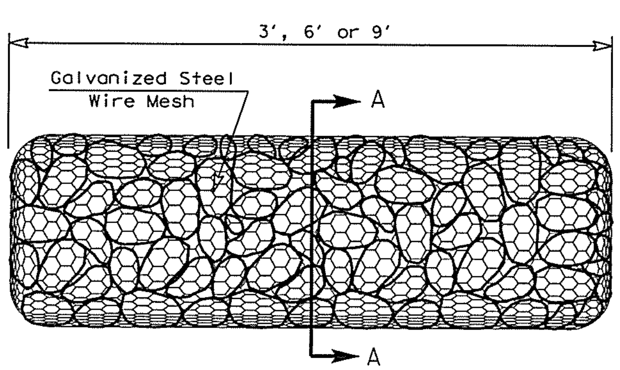

TYPE 4 (SACK GABIONS)

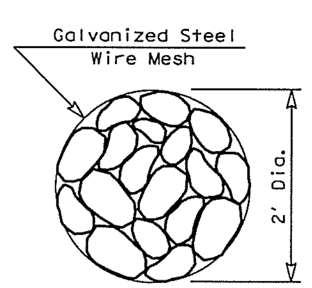

SECTION A-A

ROCK FILTER DAM USAGE GUIDELINES

Rock Filter Dams should be constructed downstream from disturbed areas to intercept sediment from overland runoff and/or concentrated flow. The dams should be sized to filter a maximum flow through rate of 60 GPM/FT^2 of cross sectional area. A 2 year storm frequency may be used to calculate the flow rate.

Type 1 (18" high with no wire mesh): Type 1 may be used at the toe of slopes, around inlets, in small ditches, and at dike or swale outlets. This type of dam is recommended to control erosion from a drainage area of 5 acres or less. Type 1 may not be used in concentrated high velocity flows (approx. 8 Ft/Sec or more) in which aggregate wash out may occur. Sandbags may be used at the embedded foundation (4" deep min.) for better filtering efficiency of low flows if called for on the plans or directed by the Engineer.

Type 2 (18" high with wire mesh): Type 2 may be used in ditches and at dike or swale outlets.

Type 3 (36" high with wire mesh): Type 3 may be used in stream flow and should be secured to the stream bed.

Type 4 (Sack gabions): Type 4 May be used in ditches and smaller channels to form an erosion control dam.

GENERAL NOTES

1. If shown on the plans or directed by the Engineer, filter dams should be placed near the toe of slopes where erosion is anticipated, upstream and/or downstream at drainage structures, and in roadway ditches and channels to collect sediment.
2. Materials (aggregate, wire mesh, sandbags, etc.) shall be as indicated by the specification for "Rock Filter Dams for Erosion and Sedimentation Control".
3. The rock filter dam dimensions shall be as indicated on the SW3P plans.
4. Side slopes should be 2:1 or flatter. Dams within the safety zone shall have sideslopes of 6:1 or flatter.
5. Maintain a minimum of 1' between top of rock filter dam weir and top of embankment for filter dams at sediment traps.
6. Filter dams should be embedded a minimum of 4" into existing ground.
7. The sediment trap for ponding of sediment laden runoff shall be of the dimensions shown on the plans.
8. Rock filter dam types 2 & 3 shall be secured with 20 gauge galvanized woven wire mesh with 1" diameter hexagonal openings. The aggregate shall be placed on the mesh to the height & slopes specified. The mesh shall be folded at the upstream side over the aggregate and tightly secured to itself on the downstream side using wire ties or hog rings. In stream use the mesh should be secured or staked to the stream bed prior to aggregate placement.
9. Sack Gabions should be staked down with ¾" dia. rebar stakes.
10. Flow outlet should be onto a stabilized area (vegetation, rock, etc.).
11. The guidelines shown hereon are suggestions only and may be modified by the Engineer.

DISCLAIMER:
The use of this standard is governed by the "Texas Engineering Practice Act". No warranty of any kind is made by TxDOT for any purpose whatsoever. TxDOT assumes no responsibility for the conversion of this standard to other formats or for incorrect results or damages resulting from its use.

LEVELS DISPLAYED

1		3	4	5	6	7	8	9	10	11	12	13	14	15	16
17	18	19	20	21	22	23	24	25	26	27	28	29	30	31	32
33	34	35	36	37	38	39	40	41	42	43	44	45	46	47	48
49	50	51	52	53	54	55	56	57	58	59	60	61	62	63	

Texas Department of Transportation
Design Division (Roadway)

TEMPORARY EROSION, SEDIMENT AND WATER POLLUTION CONTROL MEASURES

ROCK FILTER DAMS

EC(2)-93

FILE: EC293.DGN	DN: HEJ	CK: HEJ	DW: BGD	CK:
© TxDOT JUNE 1993	DISTRICT	FEDERAL AID PROJECT		SHEET
REVISIONS				45
	COUNTY	CONTROL	SECT / JOB	HIGHWAY

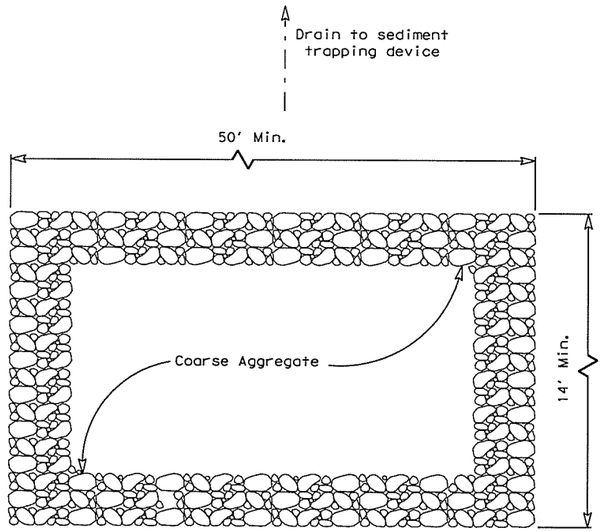

PLAN

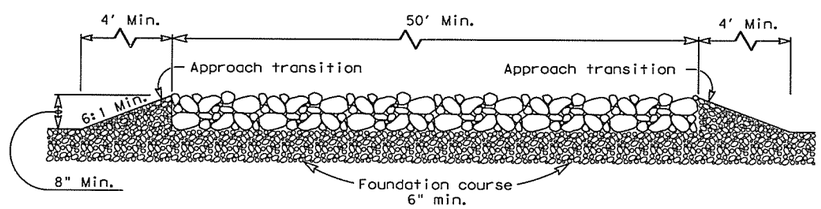

PROFILE

CONSTRUCTION EXIT (TYPE 1)

GENERAL NOTES

1. The length of the type 1 construction exit shall be as indicated on the plans, but not less than 50'.
2. The coarse aggregate should be open graded with a size of 4" to 8".
3. The approach transitions should be no steeper than 6:1 and constructed as directed by the Engineer.
4. The construction exit foundation course shall be flexible base, bituminous concrete, portland cement concrete or other material as approved by the Engineer.
5. The construction exit shall be graded to allow drainage to a sediment trapping device.
6. The guidelines shown hereon are suggestions only and may be modified by the Engineer.

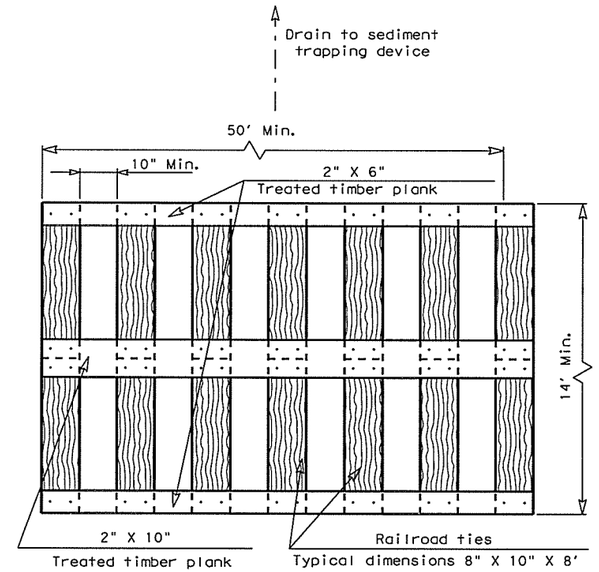

PLAN

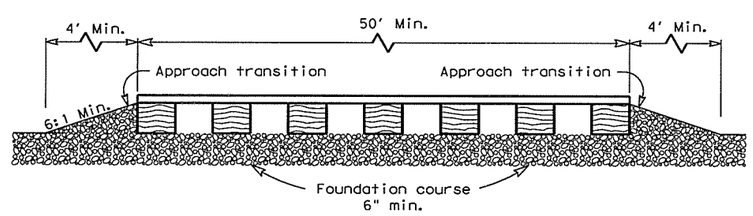

PROFILE

CONSTRUCTION EXIT (TYPE 2)

GENERAL NOTES

1. The length of the type 2 construction exit shall be as indicated on the plans, but not less than 50'.
2. The treated timber planks shall be attached to the railroad ties with ½"x 6" min. lag bolts. Other fasteners may be used as approved by the Engineer.
3. The treated timber planks shall be #2 grade min., and should be free from large and loose knots.
4. The approach transitions shall be no steeper than 6:1 and constructed as directed by the Engineer.
5. The construction exit foundation course shall be flexible base, bituminous concrete, portland cement concrete or other material as approved by the Engineer.
6. The construction exit should be graded to allow drainage to a sediment trapping device.
7. The guidelines shown hereon are suggestions only and may be modified by the Engineer.

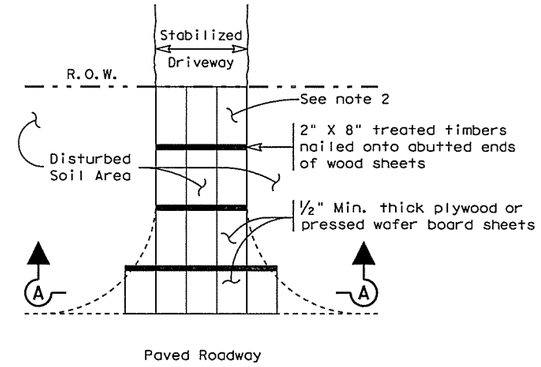

PLAN

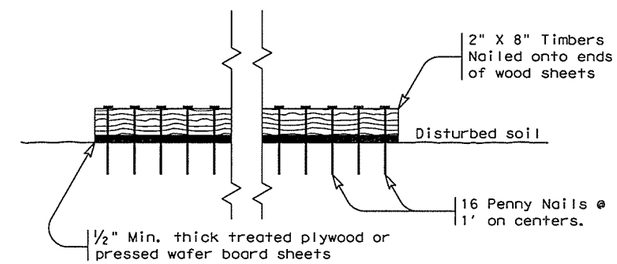

SECTION A-A

CONSTRUCTION EXIT (TYPE 3)

GENERAL NOTES

1. The length of the type 3 construction exit shall be as shown on the plans, or as directed by the Engineer.
2. The type 3 construction exit may be constructed from open graded crushed stone with a size of two to four inches spread a min. of 4" thick to the limits shown on the plans.
3. The treated timber planks shall be #2 grade min., and should be free from large and loose knots.
4. The guidelines shown hereon are suggestions only and may be modified by the Engineer.

Texas Department of Transportation
Design Division (Roadway)

TEMPORARY EROSION, SEDIMENT AND WATER POLLUTION CONTROL MEASURES

CONSTRUCTION EXITS

EC(3)-93

FILE: EC393.DGN	DN: HEJ	CK: HEJ	DW: BGD	CK:	
©TxDOT JUNE 1993	DISTRICT	FEDERAL AID PROJECT			SHEET 46
REVISIONS	COUNTY		CONTROL	SECT	JOB	HIGHWAY

DISCLAIMER:
The use of this standard is governed by the "Texas Engineering Practice Act". No warranty of any kind is made by TxDOT for any purpose whatsoever. TxDOT assumes no responsibility for the conversion of this standard to other formats or for incorrect results or damages resulting from its use.

LEVELS DISPLAYED

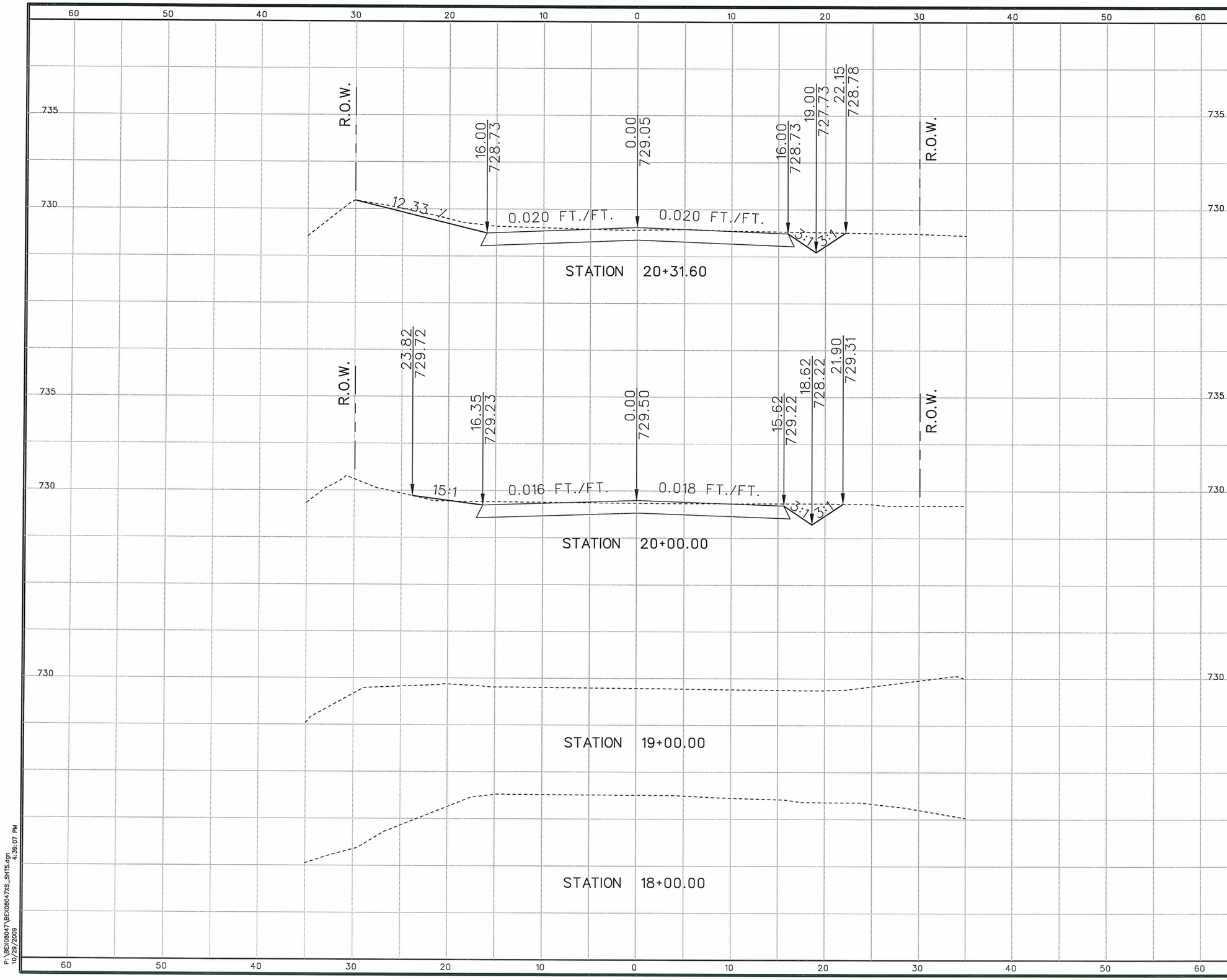

5 2.5 0 5 10
SCALE FEET
HORIZONTAL SCALE

2.5 1.25 0 2.5 5
SCALE FEET
VERTICAL SCALE

Reginald Fountain, P.E.
10/30/09

STATE OF TEXAS
REGINALD FOUNTAIN
97328
LICENSED
PROFESSIONAL ENGINEER

NO.	REVISION	BY	DATE

CP&Y
TBPE FIRM REGISTRATION NO: 1741

BEXAR COUNTY
PUBLIC WORKS DIVISION

HIGHLAND OAKS SUBDIVISION--MEMORIAL LANE

CROSS SECTIONS

STATION 18+00.00 TO STATION 20+31.60

SHEET 1 OF 16

Designed:	STATE	BEXAR COUNTY FILE NUMBER	PLAN SET NO. 47
Checked:	TEXAS		
Drawn:	COUNTY		OF
Checked:	BEXAR		62

P:\BEX08047\BEX08047XS_SHTS.dgn
10/29/2009 4:39:07 PM

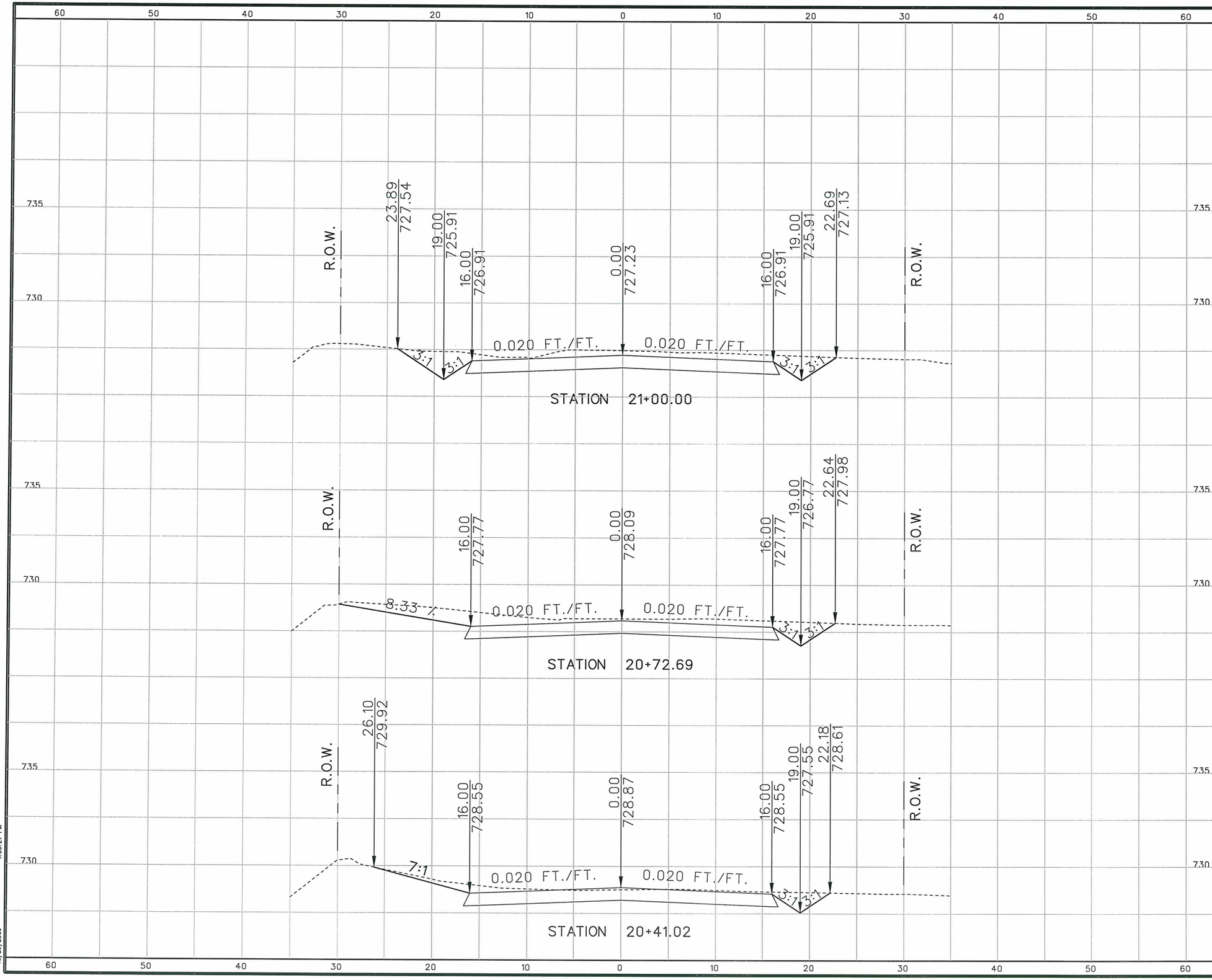

5 2.5 0 5 10
SCALE FEET
HORIZONTAL SCALE

2.5 1.25 0 2.5 5
SCALE FEET
VERTICAL SCALE

Reginald Fountain P.E. 10/30/09

STATE OF TEXAS
REGINALD FOUNTAIN
97328
LICENSED
PROFESSIONAL ENGINEER

NO.	REVISION	BY	DATE

CP&Y
TBPE FIRM REGISTRATION NO: 1741

BEXAR COUNTY
PUBLIC WORKS DIVISION

HIGHLAND OAKS SUBDIVISION–MEMORIAL LANE

CROSS SECTIONS

STATION 20+41.02 TO STATION 21+00.00

SHEET 2 OF 16

Designed:	STATE	BEXAR COUNTY FILE NUMBER	PLAN SET NO.
Checked:	TEXAS		48
Drawn:	COUNTY		OF
Checked:	BEXAR		62

P:\BEX08047\BEX08047XS_SHTS.dgn
10/29/2009 4:39:27 PM

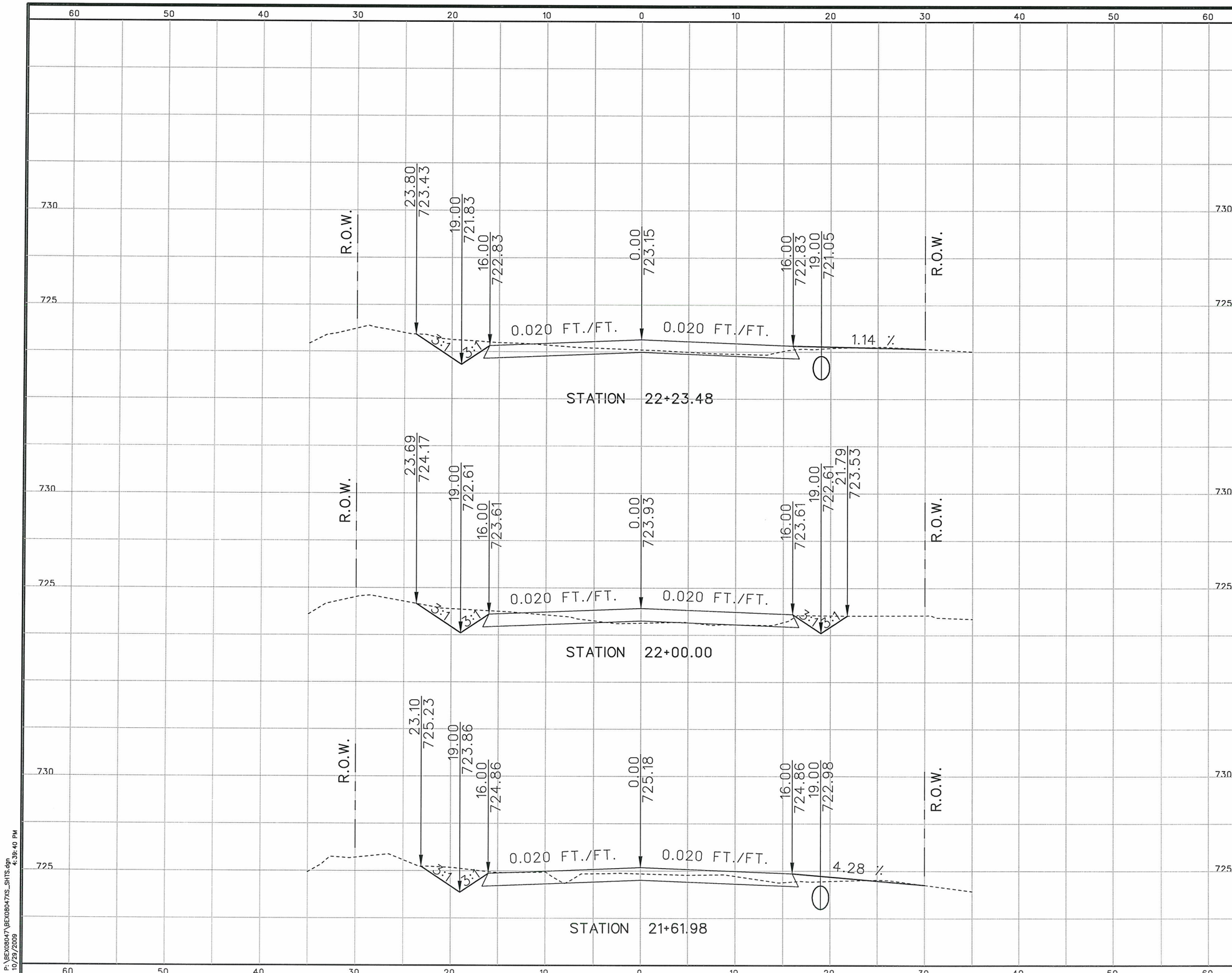

5 2.5 0 5 10
SCALE FEET
HORIZONTAL SCALE

2.5 1.25 0 2.5 5
SCALE FEET
VERTICAL SCALE

Reginald Fountain, P.E.
10/30/09

STATE OF TEXAS
REGINALD FOUNTAIN
97328
LICENSED
PROFESSIONAL ENGINEER

NO.	REVISION	BY	DATE

CP&Y
TBPE FIRM REGISTRATION NO: 1741

BEXAR COUNTY
PUBLIC WORKS DIVISION

HIGHLAND OAKS SUBDIVISION–MEMORIAL LANE

CROSS SECTIONS
STATION 21+61.98 TO STATION 22+23.48

SHEET 3 OF 16

Designed:	STATE	BEXAR COUNTY FILE NUMBER	PLAN SET NO.
Checked:	TEXAS		49
Drawn:	COUNTY		OF
Checked:	BEXAR		62

P:\BEX08047\BEX08047XS_SHTS.dgn 4:39:40 PM
10/29/2009

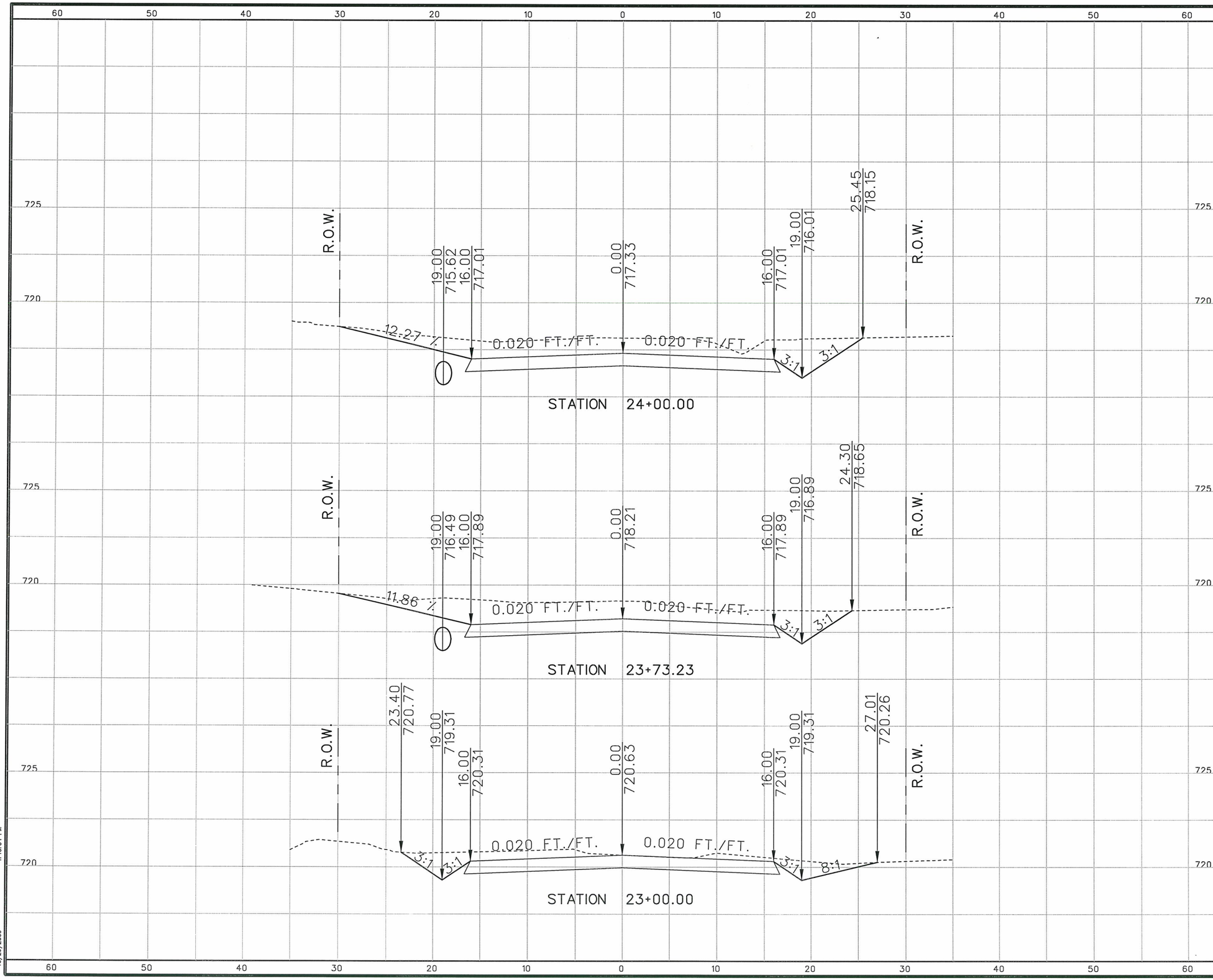

5 2.5 0 5 10
SCALE FEET
HORIZONTAL SCALE

2.5 1.25 0 2.5 5
SCALE FEET
VERTICAL SCALE

Reginald Fountain, PE
10/30/09

STATE OF TEXAS
REGINALD FOUNTAIN
97328
LICENSED
PROFESSIONAL ENGINEER

NO.	REVISION	BY	DATE

CP&Y
TBPE FIRM REGISTRATION NO: 1741

BEXAR COUNTY
PUBLIC WORKS DIVISION

HIGHLAND OAKS SUBDIVISION–MEMORIAL LANE

CROSS SECTIONS

STATION 23+00.00 TO STATION 24+00.00

SHEET 4 OF 16

Designed:	STATE	BEXAR COUNTY FILE NUMBER	PLAN SET NO.
Checked:	TEXAS		50
Drawn:	COUNTY		OF
Checked:	BEXAR		62

P:\BEX08047\BEX08047XS_SHTS.dgn
10/29/2009 4:40:04 PM

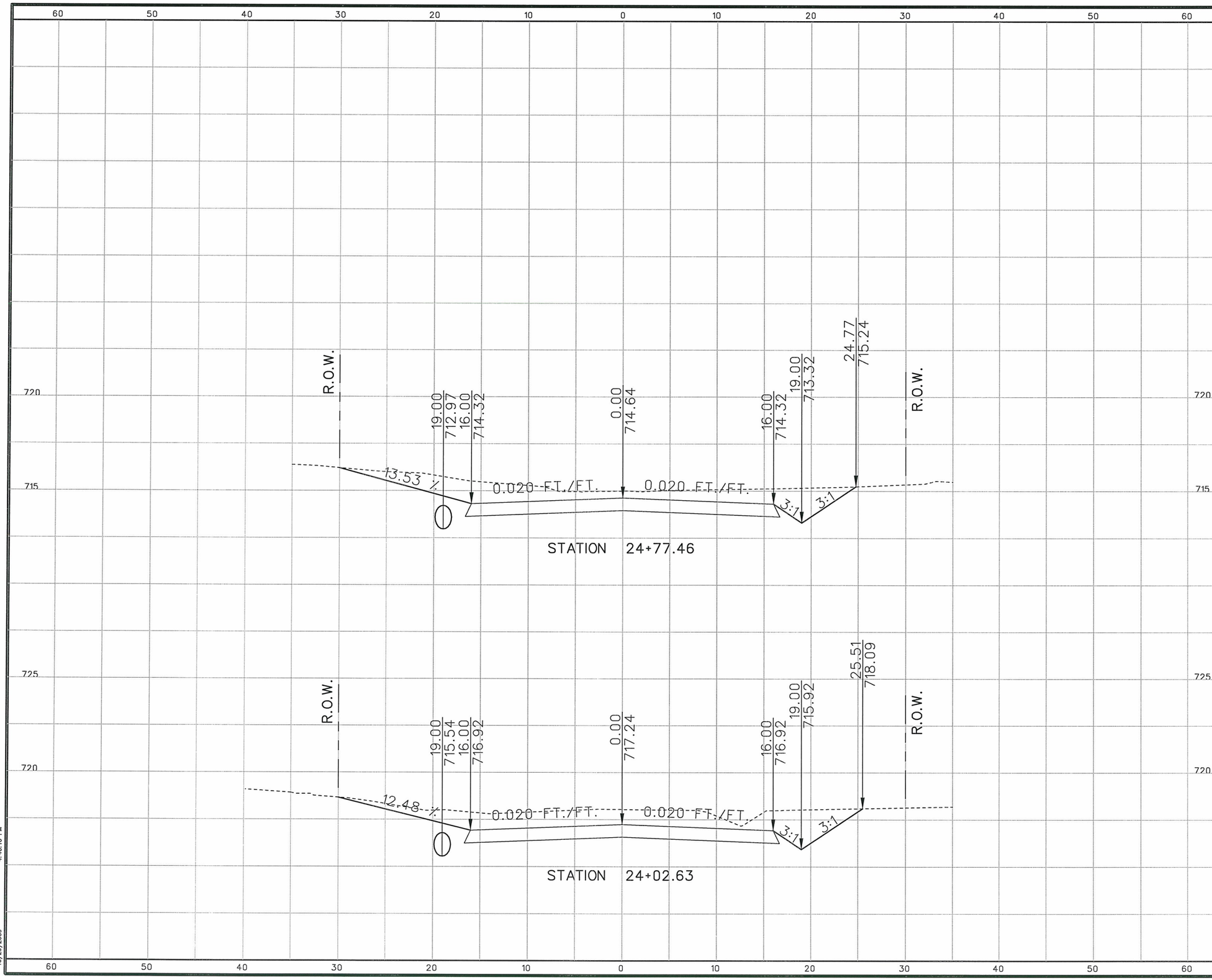

5 2.5 0 5 10
SCALE FEET
HORIZONTAL SCALE

2.5 1.25 0 2.5 5
SCALE FEET
VERTICAL SCALE

Reginald Fountain 10/30/09

STATE OF TEXAS
REGINALD FOUNTAIN
97328
LICENSED
PROFESSIONAL ENGINEER

NO.	REVISION	BY	DATE

CP&Y
TBPE FIRM REGISTRATION NO: 1741

BEXAR COUNTY
PUBLIC WORKS DIVISION

HIGHLAND OAKS SUBDIVISION–MEMORIAL LANE

CROSS SECTIONS

STATION 24+02.63 TO STATION 24+77.46

SHEET 5 OF 16

Designed:	STATE	BEXAR COUNTY FILE NUMBER	PLAN SET NO.
Checked:	TEXAS		51
Drawn:	COUNTY		OF
Checked:	BEXAR		62

P:\BEX08047\BEX08047XS_SHTS.dgn
10/29/2009 4:40:16 PM

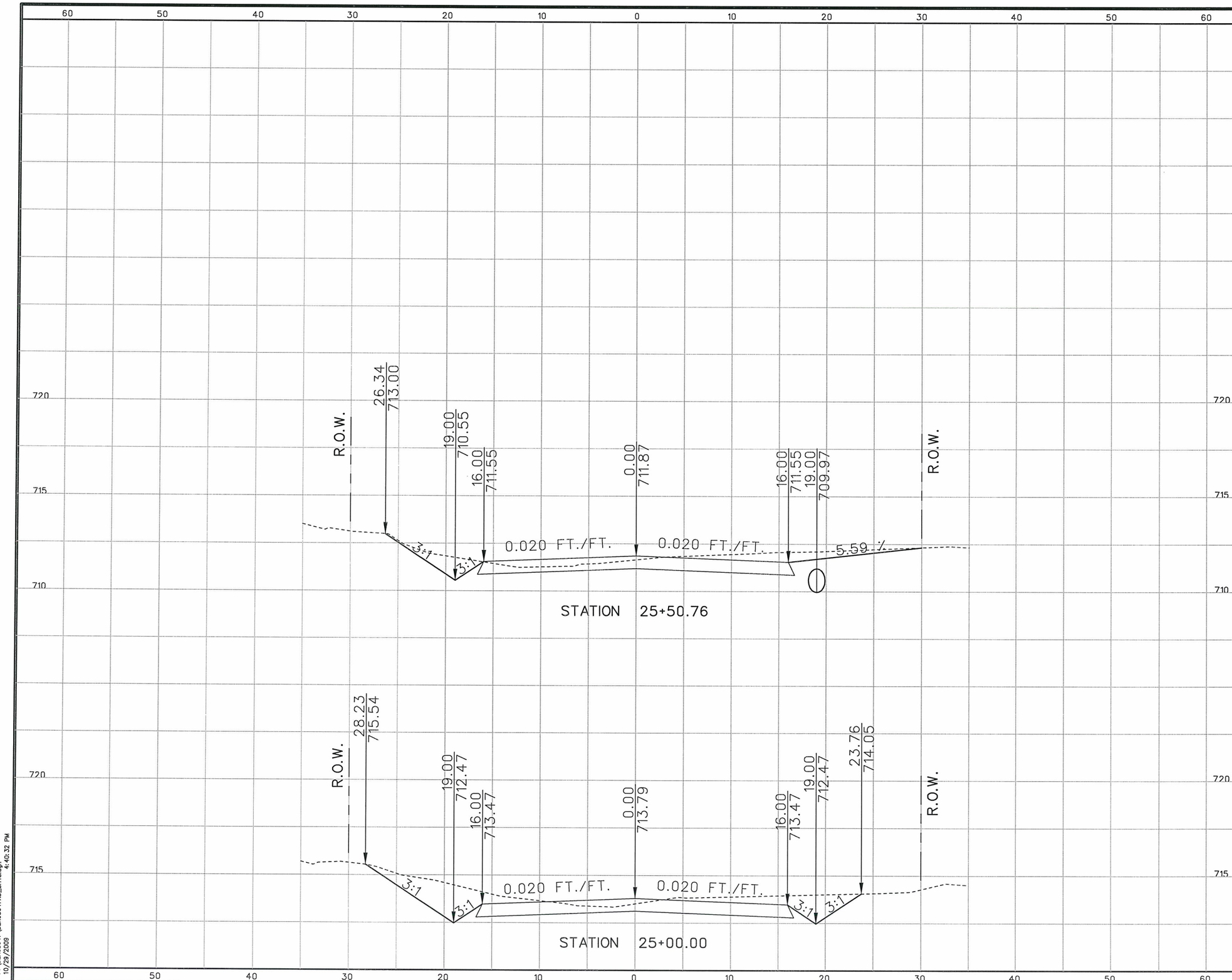

5 2.5 0 5 10
SCALE FEET
HORIZONTAL SCALE

2.5 1.25 0 2.5 5
SCALE FEET
VERTICAL SCALE

Reginald Fountain RE
10/30/09

STATE OF TEXAS
REGINALD FOUNTAIN
97328
LICENSED
PROFESSIONAL ENGINEER

NO.	REVISION	BY	DATE

CP&Y
TBPE FIRM REGISTRATION NO: 1741

BEXAR COUNTY
PUBLIC WORKS DIVISION

HIGHLAND OAKS SUBDIVISION–MEMORIAL LANE

CROSS SECTIONS

STATION 25+00.00 TO STATION 25+50.76

SHEET 6 OF 16

Designed:	STATE	BEXAR COUNTY FILE NUMBER	PLAN SET NO.
Checked:	TEXAS		62
Drawn:	COUNTY		OF
Checked:	BEXAR		62

P:\BEX08047\BEX08047XS_SHTS.dgn
10/29/2009 4:40:32 PM

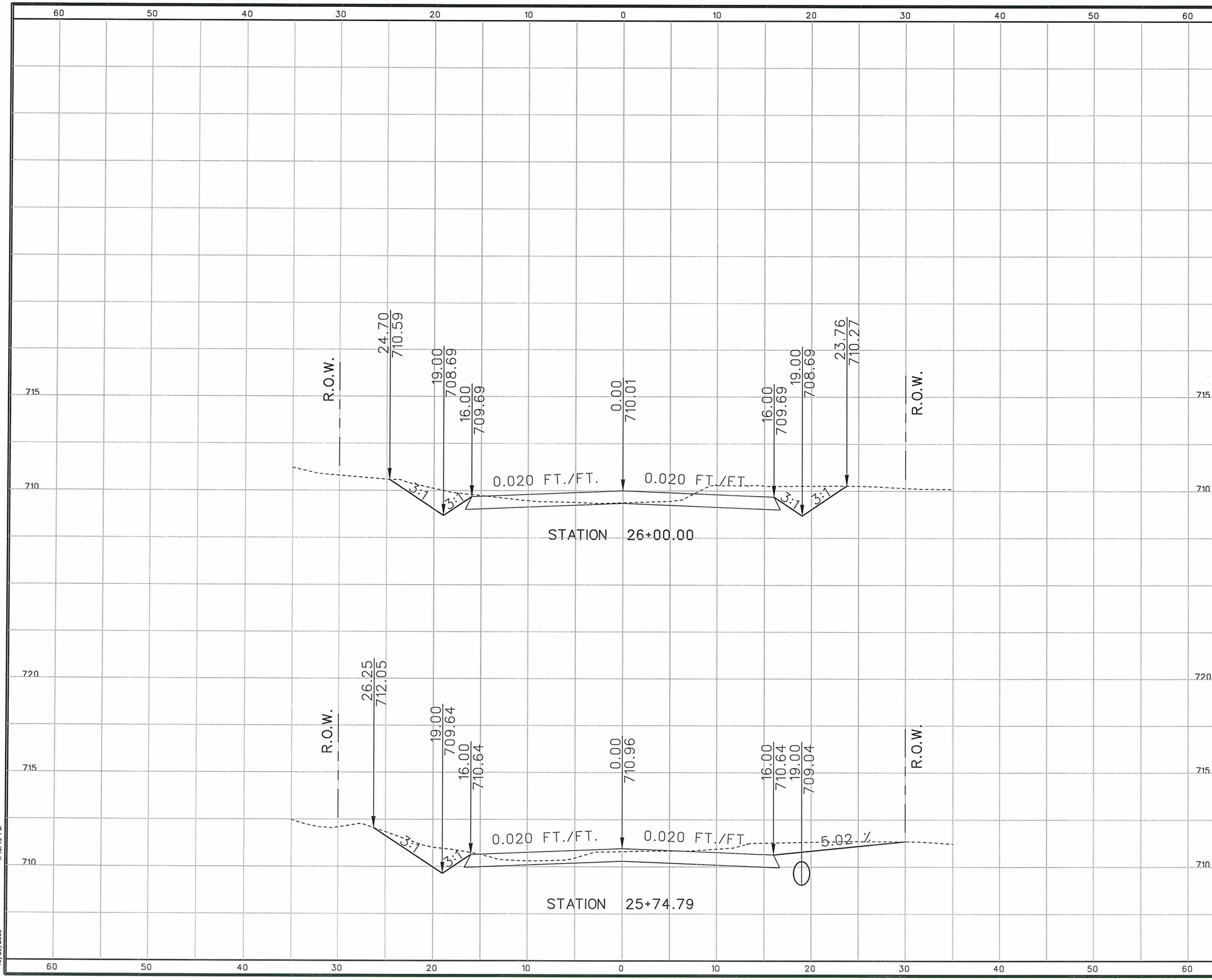

5 2.5 0 5 10
SCALE FEET
HORIZONTAL SCALE

2.5 1.25 0 2.5 5
SCALE FEET
VERTICAL SCALE

Reginald Fountain, P.E.
10/30/09

STATE OF TEXAS
REGINALD FOUNTAIN
97328
LICENSED
PROFESSIONAL ENGINEER

NO.	REVISION	BY	DATE

CP&Y
TBPE FIRM REGISTRATION NO: 1741

BEXAR COUNTY
PUBLIC WORKS DIVISION

HIGHLAND OAKS SUBDIVISION–MEMORIAL LANE

CROSS SECTIONS

STATION 25+74.79 TO STATION 26+00.00

SHEET 7 OF 16

Designed:	STATE	BEXAR COUNTY FILE NUMBER	PLAN SET NO.
Checked:	TEXAS		53
Drawn:	COUNTY		OF
Checked:	BEXAR		62

P:\BEX08047\BEX08047XS_SHTS.dgn
10/29/2009 4:40:49 PM

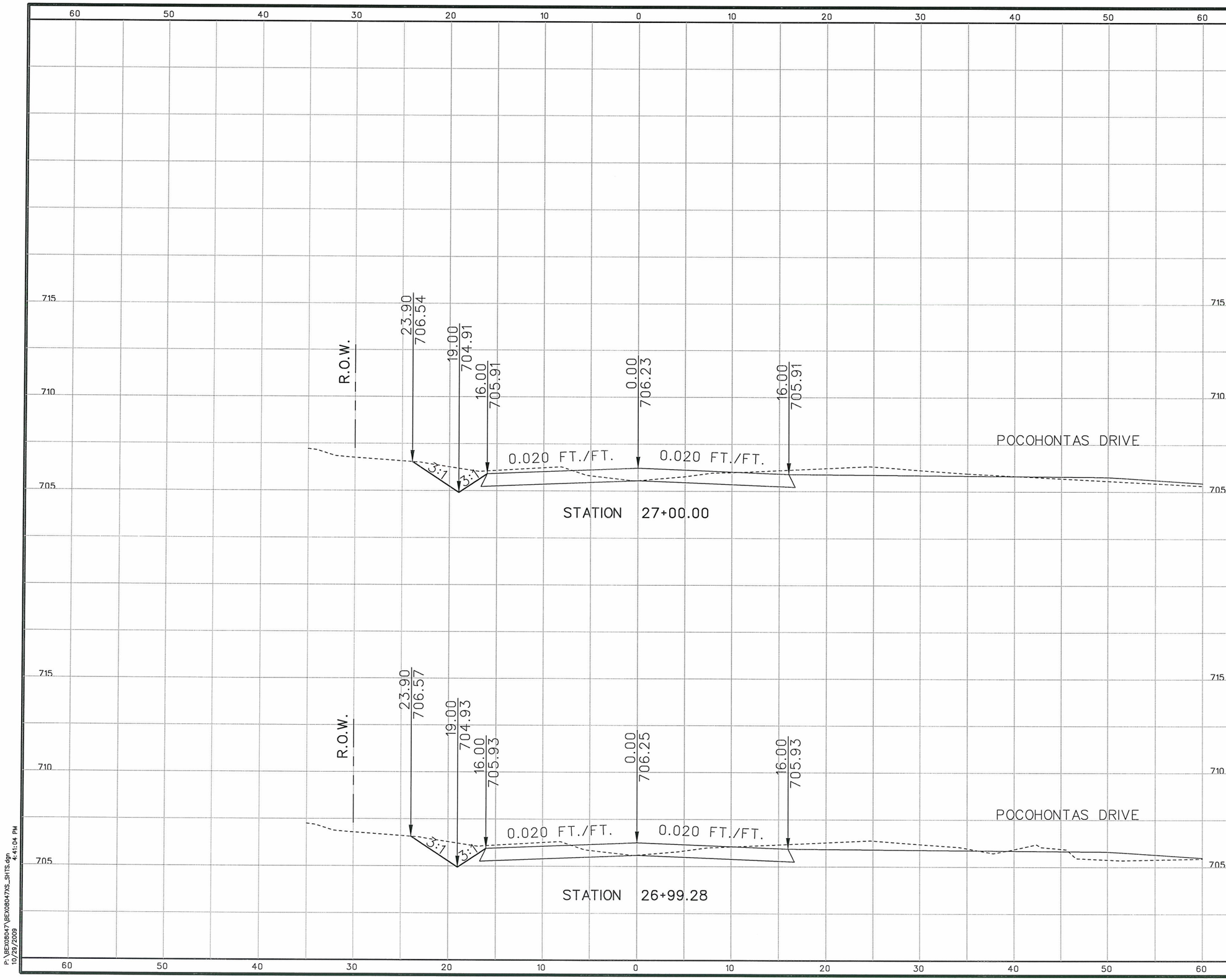

5 2.5 0 5 10
SCALE FEET
HORIZONTAL SCALE

2.5 1.25 0 2.5 5
SCALE FEET
VERTICAL SCALE

Reginald Fountain, PE
10/30/09

STATE OF TEXAS
REGINALD FOUNTAIN
97328
LICENSED
PROFESSIONAL ENGINEER

NO.	REVISION	BY	DATE

CP&Y

TBPE FIRM REGISTRATION NO: 1741

BEXAR COUNTY
PUBLIC WORKS DIVISION

HIGHLAND OAKS SUBDIVISION–MEMORIAL LANE

CROSS SECTIONS

STATION 26+99.28 TO STATION 27+00.00

SHEET 8 OF 16

Designed:	STATE	BEXAR COUNTY FILE NUMBER	PLAN SET NO.
Checked:	TEXAS		54
Drawn:	COUNTY		OF
Checked:	BEXAR		62

P:\BEX08047\BEX08047XS_SHTS.dgn
10/29/2009 4:41:04 PM

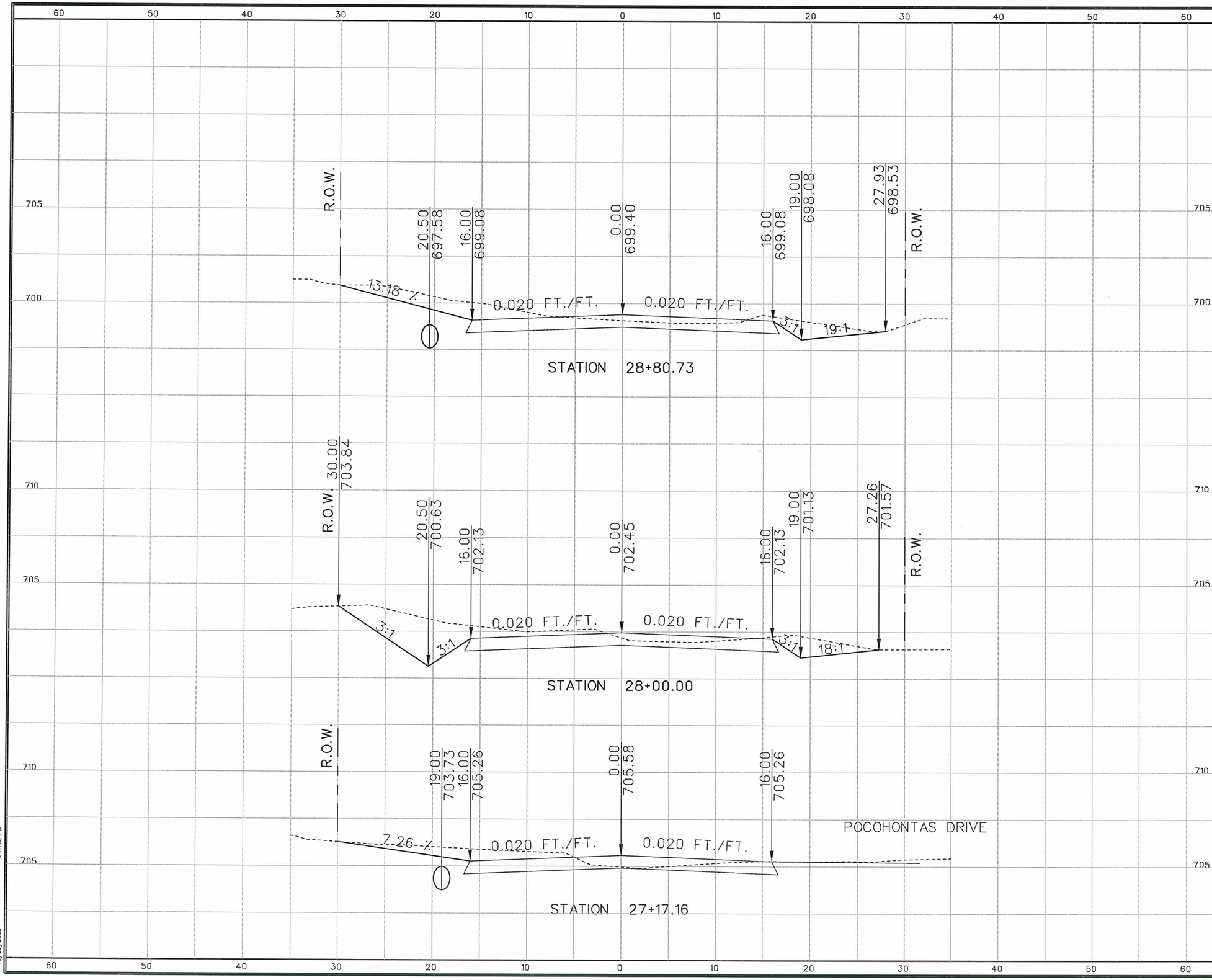

5 2.5 0 5 10
SCALE FEET
HORIZONTAL SCALE

2.5 1.25 0 2.5 5
SCALE FEET
VERTICAL SCALE

Reginald Fountain, PE
10/30/09

STATE OF TEXAS
REGINALD FOUNTAIN
97328
LICENSED
PROFESSIONAL ENGINEER

NO.	REVISION	BY	DATE

CP&Y
TBPE FIRM REGISTRATION NO: 1741

BEXAR COUNTY
PUBLIC WORKS DIVISION

HIGHLAND OAKS SUBDIVISION–MEMORIAL LANE

CROSS SECTIONS

STATION 27+17.16 TO STATION 28+80.73

SHEET 9 OF 16

Designed:	STATE	BEXAR COUNTY FILE NUMBER	PLAN SET NO.
Checked:	TEXAS		55
Drawn:	COUNTY		OF
Checked:	BEXAR		62

P:\BEX08047\BEX08047XS_SHTS.dgn
10/29/2009 4:41:18 PM

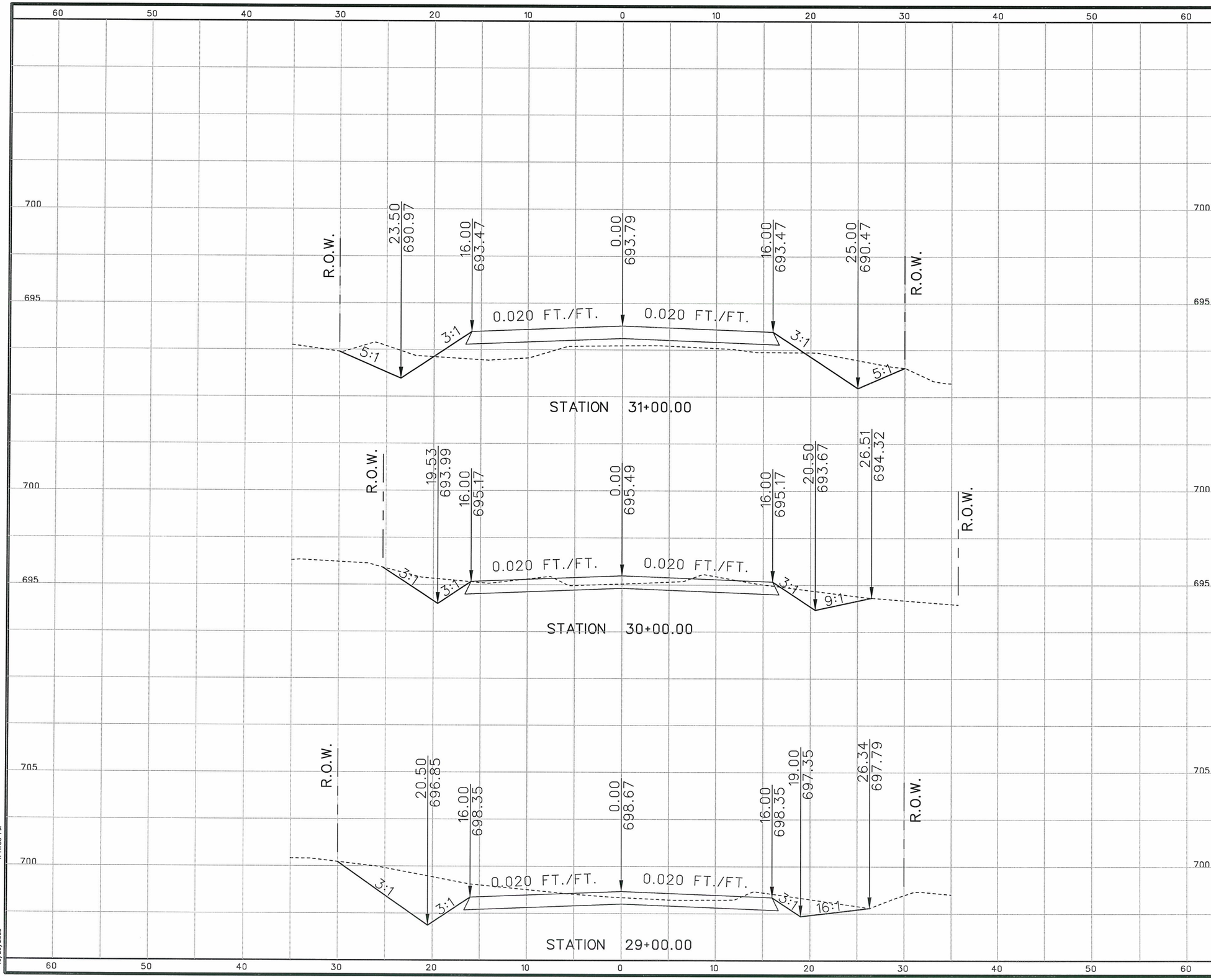

5 2.5 0 5 10
SCALE FEET
HORIZONTAL SCALE

2.5 1.25 0 2.5 5
SCALE FEET
VERTICAL SCALE

Reginald Fountain, PE
10/30/09

STATE OF TEXAS
REGINALD FOUNTAIN
97328
LICENSED
PROFESSIONAL ENGINEER

NO.	REVISION	BY	DATE

CP&Y
TBPE FIRM REGISTRATION NO: 1741

BEXAR COUNTY
PUBLIC WORKS DIVISION

HIGHLAND OAKS SUBDIVISION–MEMORIAL LANE

CROSS SECTIONS

STATION 29+00.00 TO STATION 31+00.00

SHEET 10 OF 16

Designed:	STATE	BEXAR COUNTY FILE NUMBER	PLAN SET NO.
Checked:	TEXAS		56
Drawn:	COUNTY		OF
Checked:	BEXAR		62

P:\BEX08047\BEX08047XS_SHTS.dgn
10/29/2009 4:41:30 PM

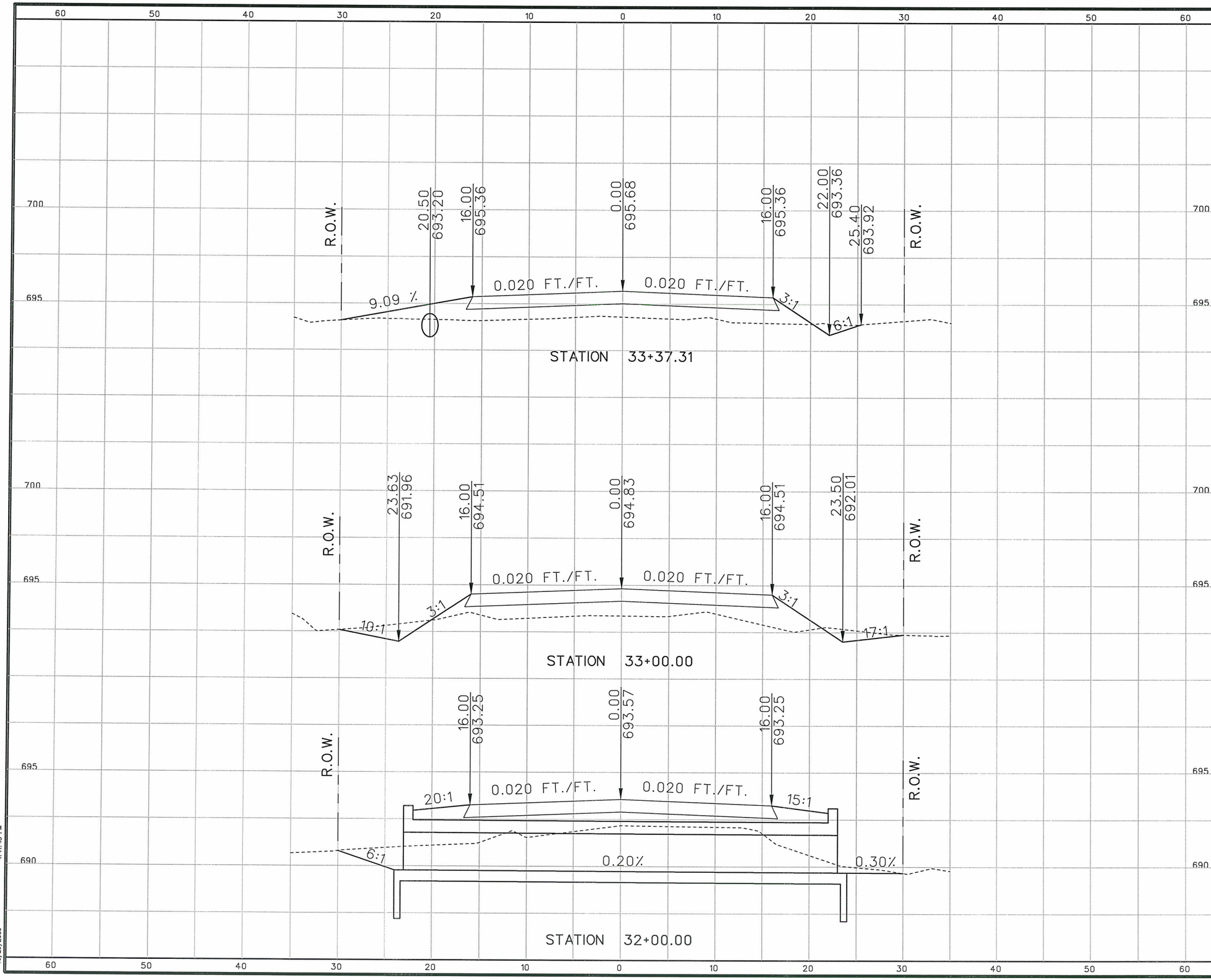

5 2.5 0 5 10
SCALE FEET
HORIZONTAL SCALE

2.5 1.25 0 2.5 5
SCALE FEET
VERTICAL SCALE

Reginald Fountain PE 10/30/09

STATE OF TEXAS
REGINALD FOUNTAIN
97328
LICENSED
PROFESSIONAL ENGINEER

NO.	REVISION	BY	DATE

CP&Y
TBPE FIRM REGISTRATION NO: 1741

BEXAR COUNTY
PUBLIC WORKS DIVISION

HIGHLAND OAKS SUBDIVISION–MEMORIAL LANE

CROSS SECTIONS

STATION 32+00.00 TO STATION 33+37.31

SHEET 11 OF 16

Designed:	STATE	BEXAR COUNTY FILE NUMBER	PLAN SET NO.
Checked:	TEXAS		57
Drawn:	COUNTY		OF
Checked:	BEXAR		62

P:\BEX08047\BEX08047XS_SHTS.dgn 4:41:45 PM
10/29/2009

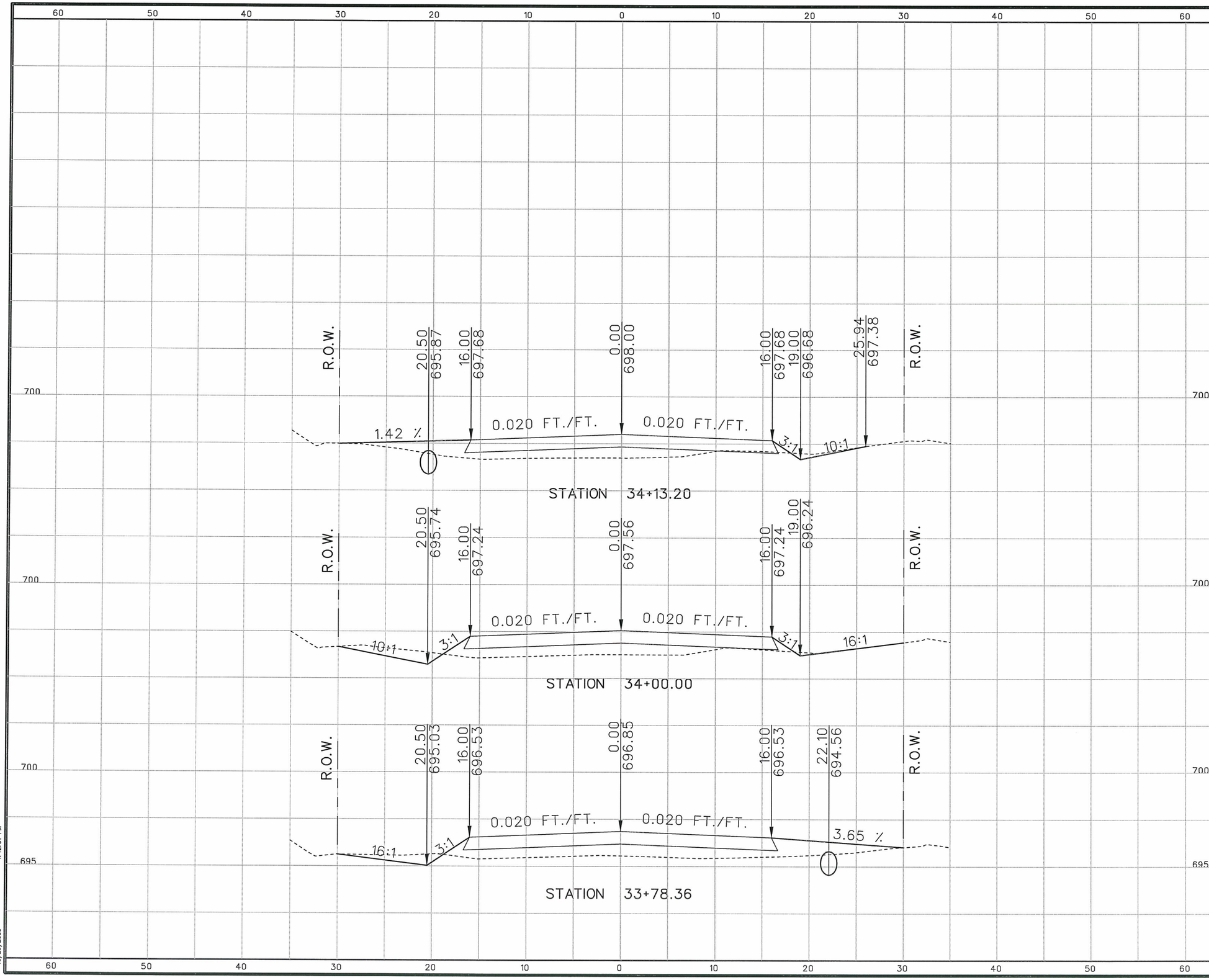

5 2.5 0 5 10
SCALE FEET
HORIZONTAL SCALE

2.5 1.25 0 2.5 5
SCALE FEET
VERTICAL SCALE

Reginald Fountain 10/30/09

STATE OF TEXAS
REGINALD FOUNTAIN
97328
LICENSED
PROFESSIONAL ENGINEER

NO.	REVISION	BY	DATE

CP&Y
TBPE FIRM REGISTRATION NO: 1741

BEXAR COUNTY
PUBLIC WORKS DIVISION

HIGHLAND OAKS SUBDIVISION–MEMORIAL LANE

CROSS SECTIONS
STATION 33+78.36 TO STATION 34+13.20

SHEET 12 OF 16

Designed:	STATE	BEXAR COUNTY FILE NUMBER	PLAN SET NO.
Checked:	TEXAS		58
Drawn:	COUNTY		OF
Checked:	BEXAR		62

P:\BEX08047\BEX08047XS_SHTS.dgn
10/29/2009 4:42:01 PM

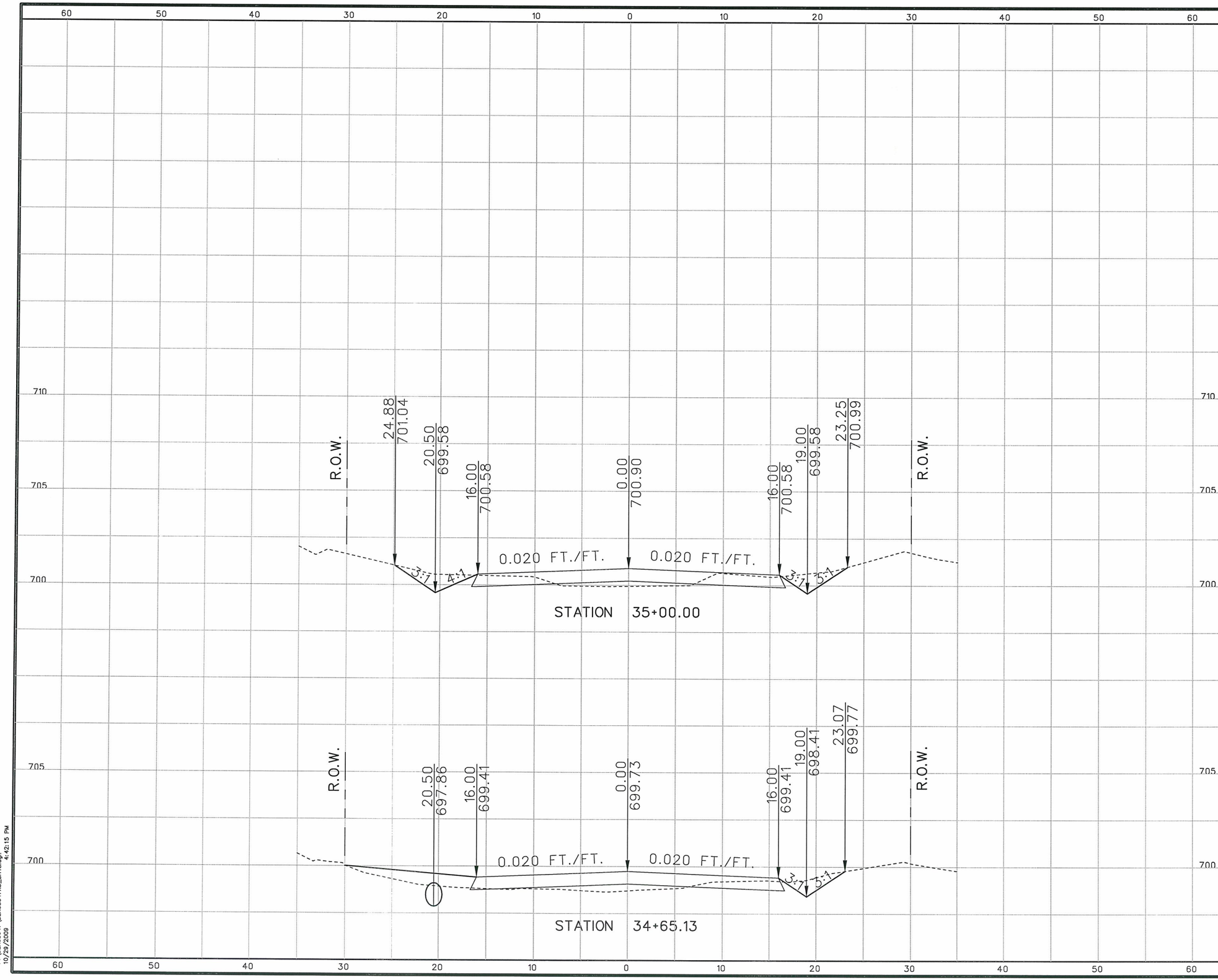

5 2.5 0 5 10
SCALE FEET
HORIZONTAL SCALE

2.5 1.25 0 2.5 5
SCALE FEET
VERTICAL SCALE

Reginald Fountain, PE
10/30/09

STATE OF TEXAS
REGINALD FOUNTAIN
97328
LICENSED
PROFESSIONAL ENGINEER

NO.	REVISION	BY	DATE

CP&Y

TBPE FIRM REGISTRATION NO: 1741

BEXAR COUNTY
PUBLIC WORKS DIVISION

HIGHLAND OAKS SUBDIVISION–MEMORIAL LANE

CROSS SECTIONS

STATION 34+65.13 TO STATION 35+00.00

SHEET 13 OF 16

Designed:	STATE	BEXAR COUNTY FILE NUMBER	PLAN SET NO.
Checked:	TEXAS		59
Drawn:	COUNTY		OF
Checked:	BEXAR		62

P:\BEX08047\BEX08047XS_SHTS.dgn
10/29/2009 4:42:15 PM

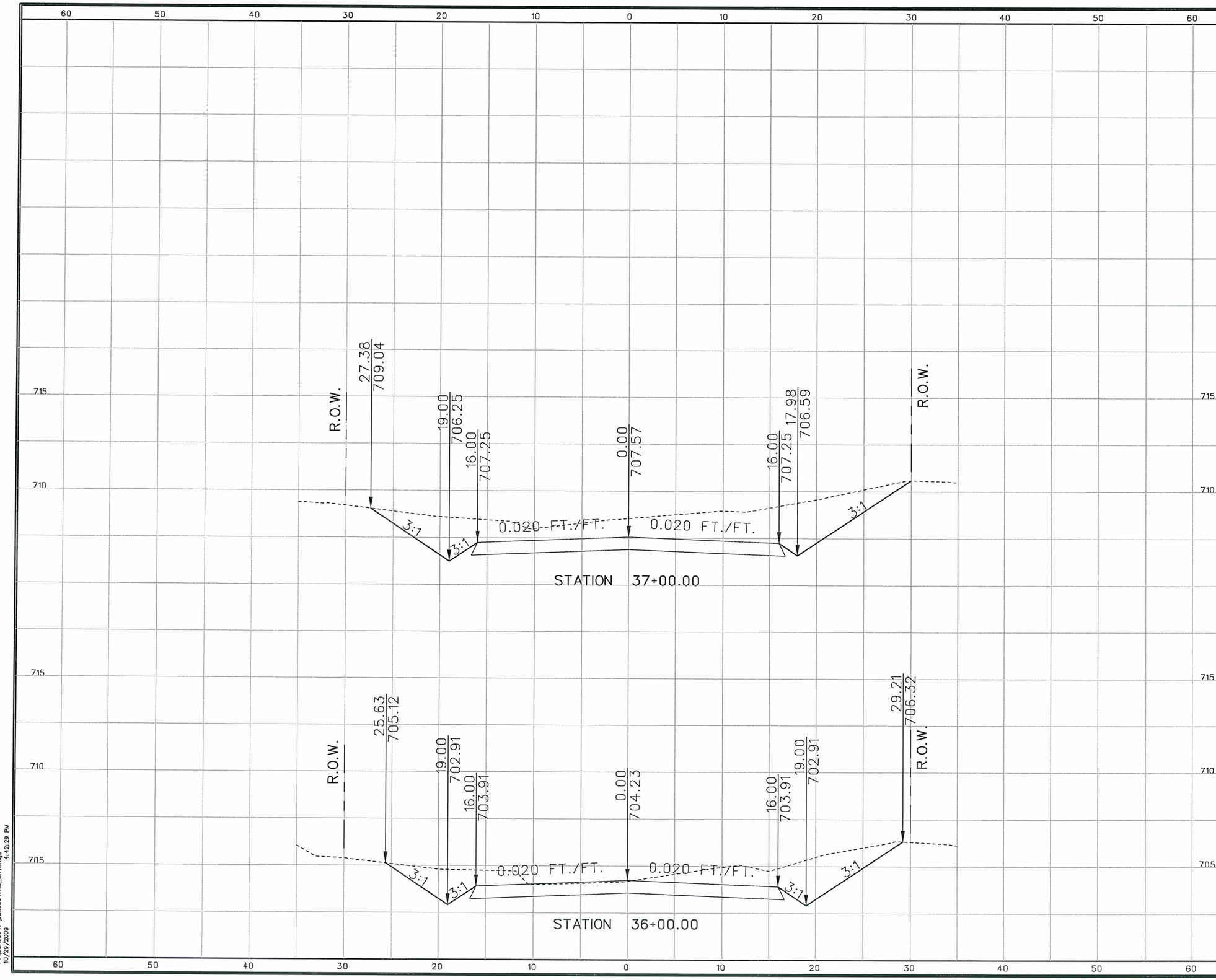

5 2.5 0 5 10
SCALE FEET
HORIZONTAL SCALE

2.5 1.25 0 2.5 5
SCALE FEET
VERTICAL SCALE

Reginald Fountain P.E.
10/30/09

STATE OF TEXAS
REGINALD FOUNTAIN
97328
LICENSED
PROFESSIONAL ENGINEER

NO.	REVISION	BY	DATE

CP&Y
TBPE FIRM REGISTRATION NO: 1741

BEXAR COUNTY
PUBLIC WORKS DIVISION

HIGHLAND OAKS SUBDIVISION–MEMORIAL LANE

CROSS SECTIONS

STATION 36+00.00 TO STATION 37+00.00

SHEET 14 OF 16

Designed:	STATE	BEXAR COUNTY FILE NUMBER	PLAN SET NO.
Checked:	TEXAS		60
Drawn:	COUNTY		OF
Checked:	BEXAR		62

P:\BEX08047\BEX08047KS_SHTS.dgn
10/29/2009 4:42:29 PM

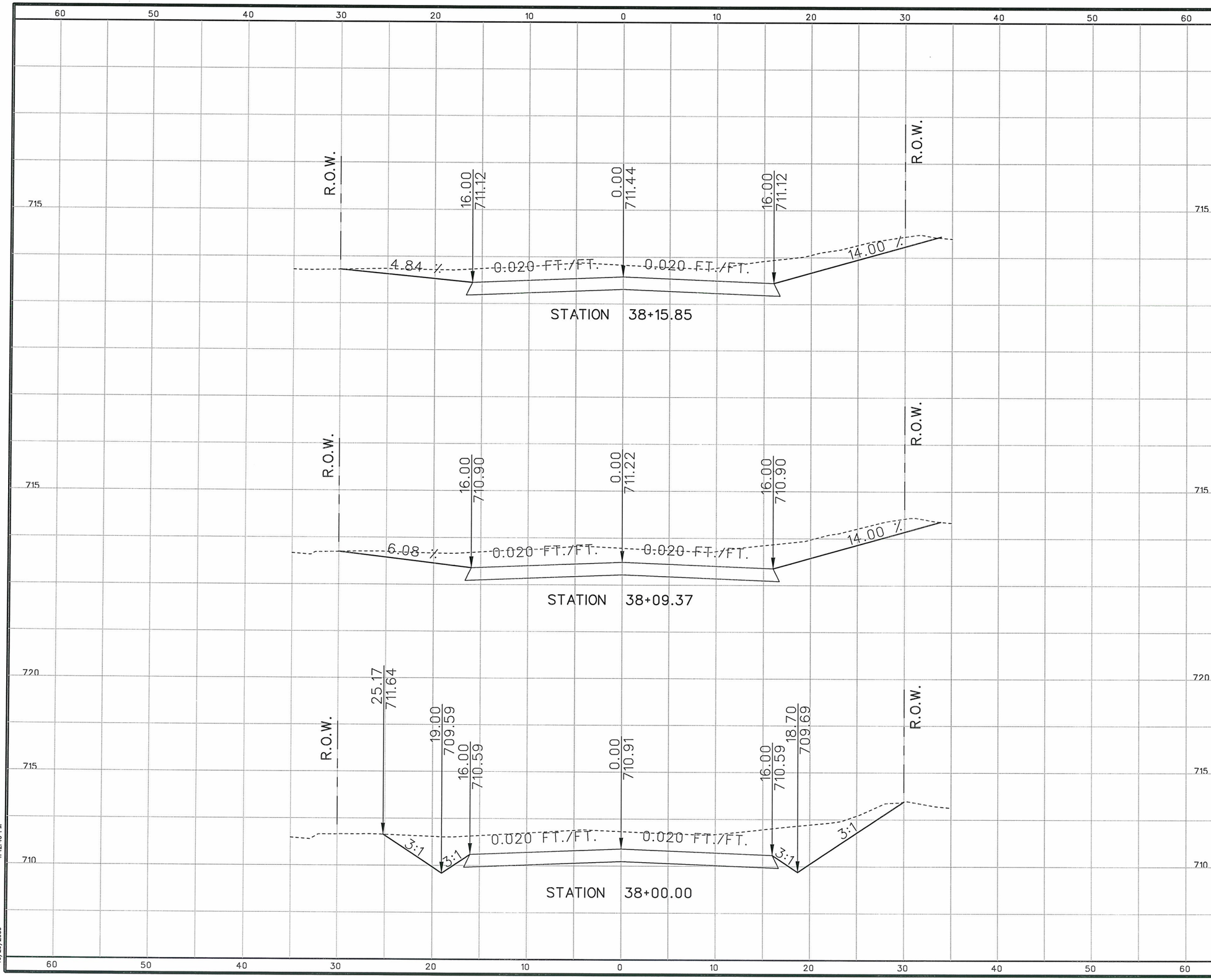

5 2.5 0 5 10
SCALE FEET
HORIZONTAL SCALE

2.5 1.25 0 2.5 5
SCALE FEET
VERTICAL SCALE

Reginald Fountain PE
10/30/09

STATE OF TEXAS
REGINALD FOUNTAIN
97328
LICENSED
PROFESSIONAL ENGINEER

NO.	REVISION	BY	DATE

CP&Y
TBPE FIRM REGISTRATION NO: 1741

BEXAR COUNTY
PUBLIC WORKS DIVISION

HIGHLAND OAKS SUBDIVISION–MEMORIAL LANE

CROSS SECTIONS

STATION 38+00.00 TO STATION 38+15.85

SHEET 15 OF 16

Designed:	STATE	BEXAR COUNTY FILE NUMBER	PLAN SET NO.
Checked:	TEXAS		61
Drawn:	COUNTY		OF
Checked:	BEXAR		62

P:\BEX08047\BEX08047KS_SHTS.dgn
10/29/2009 4:42:40 PM

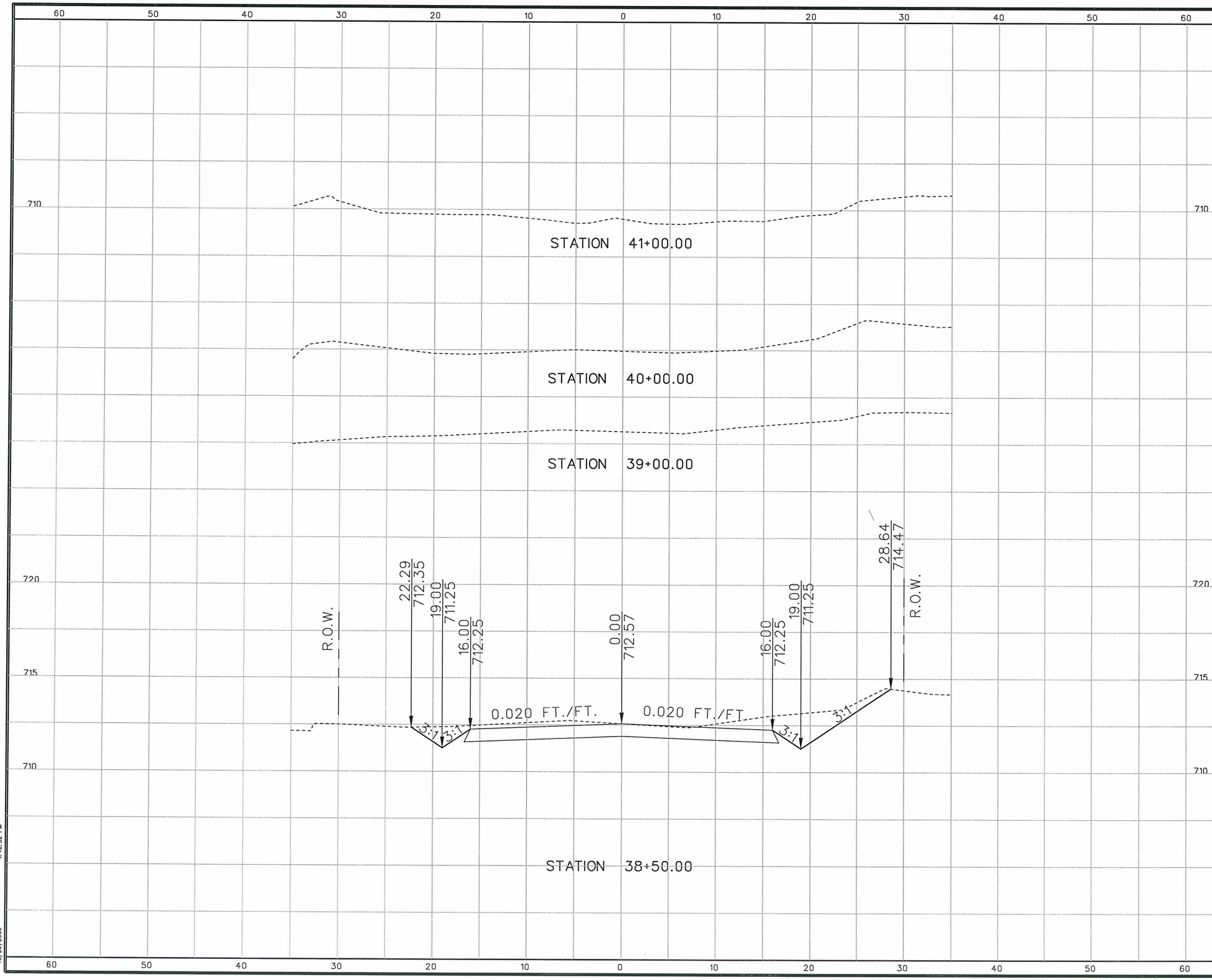

5 2.5 0 5 10
SCALE FEET
HORIZONTAL SCALE

2.5 1.25 0 2.5 5
SCALE FEET
VERTICAL SCALE

Reginald Fountain, PE
10/30/09

STATE OF TEXAS
REGINALD FOUNTAIN
97328
LICENSED
PROFESSIONAL ENGINEER

NO.	REVISION	BY	DATE

CP&Y
TBPE FIRM REGISTRATION NO: 1741

BEXAR COUNTY
PUBLIC WORKS DIVISION

HIGHLAND OAKS SUBDIVISION–MEMORIAL LANE

CROSS SECTIONS

STATION 38+50.00 TO STATION 41+00.00

SHEET 16 OF 16

Designed:	STATE	BEXAR COUNTY FILE NUMBER	PLAN SET NO.
Checked:	TEXAS		62
Drawn:	COUNTY		OF
Checked:	BEXAR		62

P:\BEX08047\BEX08047XS_SHTS.dgn
10/29/2009 4:42:52 PM

WATER GENERAL NOTES:

1. Locations of existing water lines shown on the working prints are approximate only. The contractor prior to construction must verify actual locations and depths and the contractor shall be responsible for protection of all water lines during construction. Locations for utilities other than water lines shall be taken from public works construction documents or other utility plans available.

2. Bidders are notified to make subsurface investigations where the area is known to contain poor soils. All excavation shall be unclassified regardless of material encountered. No additional payment will be made for water, sand, gravel, or other unstable conditions encountered in the excavation. No additional payment will be made for rock excavation.

3. The contractor shall protect all open excavations and equipment from the children, pedestrians, and vehicles in the area by providing, installing and maintaining fencing, barricades, or other protective systems as required by Bexar Metropolitan Water District. No separate payment will be made.

4. The contractor shall be responsible for the restoration of all fences, concrete islands, or concrete driveways in the work area to their original condition prior to completion of the contract. This shall apply to all of the mentioned items whether they are shown on the plan or not. (no separate pay item (N.S.P.I.)).

5. The contractor must contact the County construction inspector for the County of jurisdiction 48 hours in advance (not including weekends) of any minor street closure. The advance time notice is necessary to install advisory signs and give motorists notice of the street closure. The construction inspector after being notified will contact the traffic engineering office to make the necessary arrangements.ps

6. The contractor shall be responsible for providing safe access accommodations for school children and pedestrians.

7. All construction, unless otherwise noted below, shall conform to the BexarMet Water District (BMWD), San Antonio and Texas Standard Specifications for Water Works Construction and is subject to inspections and approval by BexarMet Water District (BMWD).

8. The contractor shall not place any waste materials in the 100-year flood plane without first obtaining an approved flood plain development permit as required from the U.S. Corp of Engineers.

9. Detour routing around work activities, maintenance of detour signs, and flagmen are the contractor's responsibility. No separate payment will be made.

10. The contractor shall provide and maintain safe access for the delivery of mail by the U.S. Postal Service.

11. The contractor shall provide and maintain safe access to residences and businesses as required by Bexar Met.

12. All temporary traffic control devices, etc. shall be provided by the contractor without direct payment, unless otherwise noted or stated.

13. The contractor shall call BexarMet Water District Inspection Department 48 hours prior to excavation at 354-6537.

14. The contractor is to contact the Utility Company Locator 48 hours prior to excavation. The contractor has the responsibility to protect and support all utility lines during construction. Contractor assumes all liability if he fails to carry out this responsibility.

15. The contractor shall verify the exact location of underground utilities and drainage structures whether shown on plans or not.

a. Sanitary Sewer	704-7160	(San Antonio Water System)
b. Storm Drain	335-6700	(Bexar County)
c. Telephone	1-800-545-6005	(Southwestern Bell)
d. Gas	1-800-545-6005	(City Public Service)
e. Electric	1-800-545-6005	(City Public Service)
f. Cable TV	1-800-545-6005	(Time Warner Cable)
g. Traffic Signal Cable	207-7765	(City of San Antonio Traffic Signal Cable)

16. The contractor shall call Bexar County Dept. of Public Works 48 hours prior to excavation at 335-6700 for projects within Bexar County jurisdiction.

17. (not used)

18. Due to Federal Regulation Title 49, Part 192.181, CPS must maintain access to gas valves at all times. The contractor must protect and work around any gas valves that are in the project area.

19. Whenever power poles are adjacent to the proposed water line, the contractor shall provide proper shoring or other suitable support during construction of the water line. The utility company maintenance department must approve shoring.

20. Water mains shall be installed with a minimum of 4-ft. cover and it is the responsibility of the contractor to prevent conflicts with Public Works Construction.

21. Fire Hydrants shall be 5 ft. bury unless otherwise specified and limited to those manufactured by the Mueller Company (Centurion) or Clow (Medallion). Fire Hydrants shall be painted and color-coded in accordance to AWWA standard under Appendix B "Uniform Color Scheme for Fire Hydrants" Sections B1 and B2. (No separate pay item) Open Right.

22. Brass fittings shall be compression type, ball valve with full port design and limited to products manufactured by the Ford Meter Box, Inc., and/or Mueller Company.

23. Valves through 12 inch shall be limited to Mueller or Clow. Valves larger than 12 inch shall be hand operated, butterfly valves meeting BMWD specifications and A.W.W.A. standards manufactured by the previously mentioned company. All water valves are to be "Open Left" with valve covers so indicating.

24. All service lines shall be type K copper and are to be installed in continuous runs. Service lines should have a minimum of 36 inches of cover. Service lines that tie into water mains with dissimilar metals shall be wrapped with a suitable tape, with ½" overlap, for a minimum clear distance of 36 inches from the main as per AWWA 600. Tapping sleeves shall be M.J. type. All long services shall be enclosed in a 4" PVC sleeve per BexarMet Water District requirements. Payment included in cost of long service. Meter boxes shall conform to BMWD specifications (2 piece).

25. Two inch valves used for blow-off assemblies shall be limited to resilient wedge gate, epoxy coated (inside and out), cast iron body valves with stainless steel bolts meeting A.W.W.A. Standard C509.80. Two-inch blow-offs shall be black iron pipe wrapped with black PVC tape through blow-off. Valves shall be female threaded connections, standard 2 inch operating nut, open left. Valves shall be Mueller C-500 resilient wedge gate valves. Contractors are to furnish and install permanent and temporary blow-offs with BMWD Std. drawings DD-844-01 and DD-844-02, respectively.

26. Six, eight, and twelve-inch Ductile Iron pipe shall be Class 52 and sixteen-inch shall be Class 51. Pipe coupling and jointing materials shall be limited to those manufactured by Certain Teed Products Company and Johns-Manville Sales Corporation. Six through twelve inch PVC pipe shall be AWWA C900 (DR-14) and sixteen inch shall be AWWA C905 (DR-18). Pre-wrapping and/or stacking of ductile pipe will not be allowed under any circumstance, unless specified by BexarMet Water District Inspector. (No separate pay item)

27. When cut pipe nipples are used with ductile iron fittings or valves, the length shall be at least three times the diameter of the pipe.

28. Fitting weight is based on MJ, Ductile Iron Fittings (Full Body). All iron fittings shall be of domestic manufacture and design.

29. Gravel bedding shall be placed 1 foot over, under and around all water mains and service lines. The gravel shall be Modified Grade 5 in accordance with Std. Spec. 804. The plasticity index shall not be more than 12 when tested I.A.W. Texas Department of Transportation Test Method Tex-106-E.

30. Water mains and services shall be hydrostatically field tested according to AWWA C600-99 or latest revision there of, and at a minimum pressure of 150 psi before acceptance or as specified by BMWD inspector. Special attention should be paid to BMWD's high-pressure areas. The contractor should be aware that pressure in these high-pressure areas ranges from 56 to 200 psi. The hydrostatic test for these areas should be performed at a minimum pressure of 200 psi. It is the contractor's responsibility to verify whether or not he is operating in a high-pressure area.

31. The contractor shall arrange for appointments with BexarMet Water District 24 hours prior to testing and/ or inspection. Telephone 354-6537.

32. The final 12 inches of backfill across driveways and other traffic areas shall be backfilled with black base in order to insure adequate access until final construction of drives and streets is completed.

33. N/A

34. Existing fire hydrants shall be removed by the contractor and shall remain the property of BexarMet Water District. Contractor shall deliver removed fire hydrants to a location determined by BexarMet Water District. (no separate pay item (N.S.P.I.)).

35. Jumper connections to existing water source shall be provided by contractor as required or directed by the BMWD inspector. The contractor shall disinfect all mains with Machine chlorination. Required 2" taps and fittings shall be the responsibility of the contractor.

36. All valves shall remain closed until mains have been disinfected, flushed and released by contractor for public use by the BMWD. After release contractor shall tie in existing main to the new main. (No separate pay item)

37. Thrust blocks shall be installed on all fittings as shown in the standard drawing DD-839 series of the BexarMet Water District Specification.

38. Relay existing service lines and relocate meter boxes as shown on the plans, or as directed by the construction inspector.

39. After the new mains have been released for service and service lines have been transferred to the new mains, abandon existing mains where shown on the plans.

40. Contractor and/or contractor's independently retained employee or structural design/ geotechnical/ safety/ equipment consultant, if any, shall review these plans and available geotechnical information and the anticipated installation sites(s) within the project work area in order to implement contractor's trench excavation safety protection systems, programs and/or procedures for the project described in the contract documents. The contractor's implementation of these systems, programs and/or procedures shall provide for adequate trench excavation safety protection that comply with as a minimum, OSHA standards for trench excavations, specifically, contractor and/or contractor's independently retained employee or safety consultant shall implement a trench safety program in accordance with OSHA standard governing the presence and activities of individual working in and around trench excavation.

41. The contractor will note that all work shall be scheduled to take place on Monday through Friday between the hours of 8 am and 5 pm. BexarMet Water District will not provide inspectors on Saturday, Sunday or holidays unless special compensation arrangements are made with BexarMet Water District.

42. When sewer lines are installed in the vicinity of water mains such installation shall be in strict accordance with the "TCEQ Rules and Regulations for Public Water Systems" 290.44(e) Location of water lines. (May 2008 or any revisions thereto).

43. Upon completion of construction, the contractor shall furnish the engineer with a signed set of plans with all the final measurements and as built information for preparation of as built plans. Contractor shall coordinate his as built plans with BexarMet Water District inspectors prior to submittal to engineer.

44. It is ultimately the responsibility of the developer / customer to install and maintain Pressure Reducing Valves on customer's side of the meter where static pressures exceed 80 psi.

45. Air Release Valves shall be installed at all high points or as specified by BMWD Engineer and should comply with the following schedule: 6" pipe (3/4" ARV); 8" pipe (1" ARV); 12" - 16" pipe (2" ARV); & 20" - 24" pipe (3" ARV).

46. Contractor must install proper joint restraints as determined by Bexar Met in accordance with EBAA Iron Inc., pipe size, length, soil type requirements, in conjunction with proper thrust blocking. Contractor must install joint restraints per manufacturer's specifications.
- Double nut all restraining bolts
- Any type of joint restraint must be bi-directional
- With fire hydrant installation, cut to fit nipples must be restrained
- Restraint rings of pipe bells shall be made of ductile iron components. All ductile iron shall conform to ASTM A536. The restraint mechanism shall consist of a plurality of individually activated gripping surfaces to maximize restraint capability.

47. Request for clarification, additional information, or interpretation of either drawings or specifications shall be submitted in writing on approved BexarMet Request for Information (RFI) forms to the BexarMet Engineering Department. Only written RFI forms will be answered; request not submitted in writing will not be considered.

48. Disposal areas, stockpiles, and haul roads shall be constructed in a manner that will minimize and control the amount of sediment which may enter receiving waters. Disposal areas shall not be located on any wetlands, water body, or stream bed. The contractor shall locate and construct construction staging areas and vehicle maintenance and parking areas in a manner to minimize pollutant runoff and in accordance with BexarMet requirements.

49. The contractor shall clear all water ways as soon as practicable of all temporary embankment, temporary bridges, matting, falsework, piling, debris, or obstructions placed during construction operations which are not part of the finished work.

50. The contractor shall maintain all erosion and sediment controls in good working order and in accordance with BexarMet's requirements. If repairs are necessary, they shall be done at the earliest date possible, but no late than 7 calendar days after the surrounding exposed ground has dried sufficiently to prevent further damage from contractors equipment. The areas adjacent to creeks and drainage ways shall be given first priority, followed by devices and systems protecting storm sewer inlets.

51. Fire hydrant spacing requirements per BexarMet Board Policy are 500 feet in residential areas and 300 feet in commercial and industrial areas.

52. No meter boxes or fire hydrants to be set in driveways or sidewalks. Any meter or fire hydrants set in driveways or sidewalks will be relocated at Developer's / Contractor's expense.

53. ASBESTOS CEMENT (AC) PIPE TIE-INS:
There are several locations where the proposed water line will/might tie into an existing AC pipe. When performing this work, the Contractor shall observe and comply with all federal, state, and local laws, ordinances and regulations regarding the management of asbestos containing materials. At the minimum, work involving AC pipe should be overseen by a person who has received asbestos training and is familiar with the national emissions standards for hazardous air pollutants (NESHAP). If greater than 260 linear feet of pipe is to be removed, written notification to the Texas Department of Health (TDH) 10 days prior commencing with the removal of AC pipe as required. At each location shown in the plans and/or identified by the Contractor to involve AC pipe, the Contractor will be required to remove the minimum amount of AC pipe necessary to make the connection without creating any friable material. The contractor shall remove whole sections of AC pipe and make the tie ins at the nearest joint. The contractor shall remove the AC pipe, store it in a secure, engineer approved location for pick up by a qualified disposal Consultant. Prior to performing this work, the Contractor shall notify the engineer and the owner of the utility of the work schedule 48hrs in advance of beginning the work .

BexarMet
WATER DISTRICT

Memorial Lane, Main Replacement
Hwy 281 to Little Walnut
Job No.: J9020C / BP-091020A
April 2010

LOCATION MAP

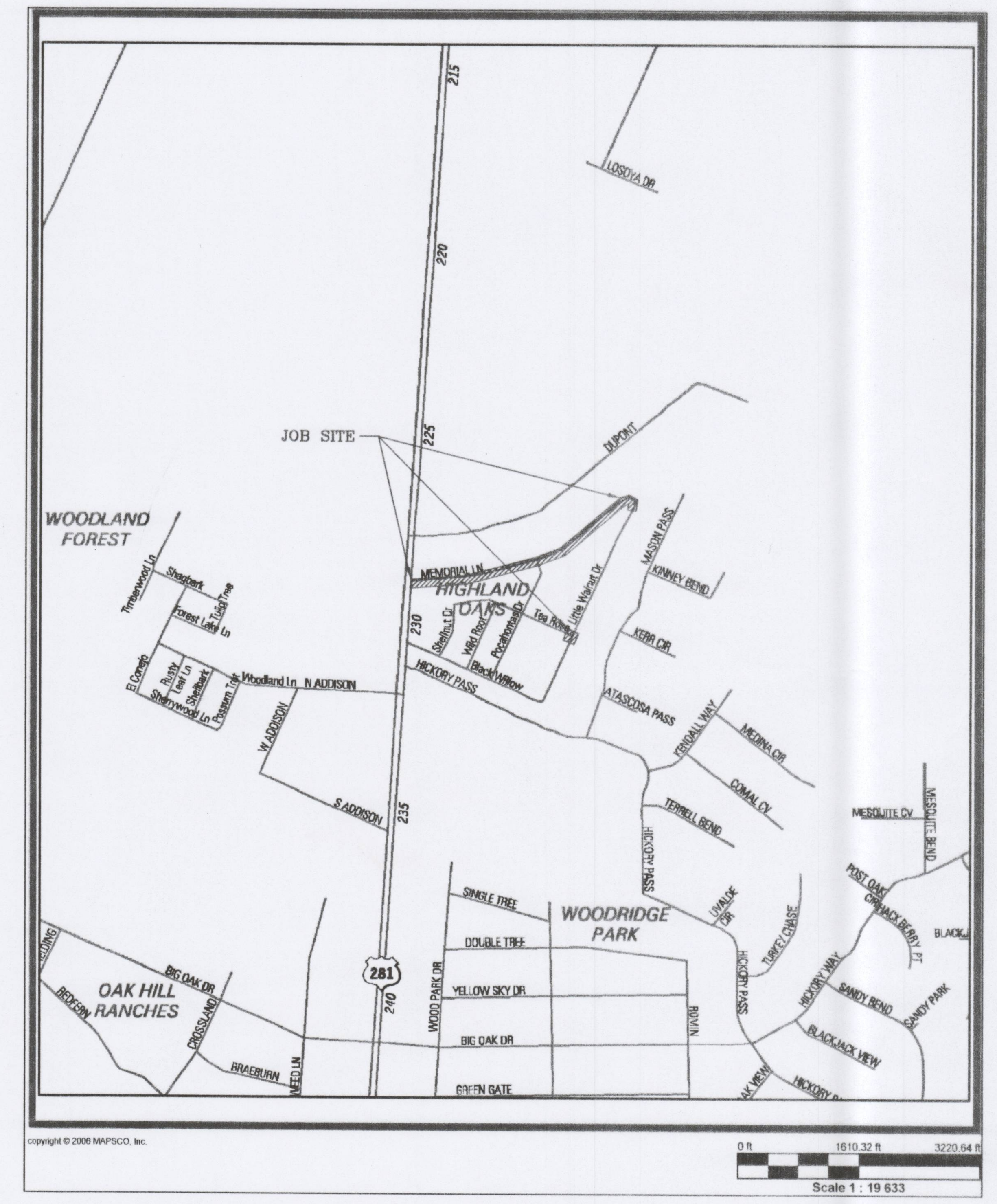

TABLE OF CONTENTS

SHEET	DESCRIPTION
1	General Notes, Location Map, Table Of Contents, & Legend
2	Memorial Ln., Sta. 10+00 to Sta. 19+00
3	Memorial Ln., Sta. 19+00 to Sta. 28+00
4	Memorial Ln., Sta. 28+00 to Sta. 37+00
5	Memorial Ln., Sta. 37+00 to Sta. 42+00 Little Walnut Dr., Sta. 10+00 Sta. 12+00
6	Little Walnut Tie In @ Tea Rose
7	Water Details Sheet

NOTE:
THE LOCATIONS & DEPTHS OF EXISTING UTILITIES SHOWN ON THE PLANS WERE PLACED ON THE PLANS FROM INFORMATION FROM VARIOUS SOURCES. CONTRACTOR TO VERIFY THE LOCATION & DEPTH PRIOR TO CONSTRUCTION OF ALL UTILITES SHOWN OR NOT SHOWN ON THE PLANS.

LEGEND

NOTE ON ACCOUNT NO.	FIRE HYDRANT
12345* ACCOUNT NO.	LAND HOOK (COMMON OWNER)
12345 ADDRESS	ORIGINAL PROPERTY LINE
	EASEMENT LINE
SMALL METER	MAIL BOX
LARGE METER	A.R.V. ASSEMBLY
REDUCER	EDGE OF EXISTING ASPHALT
VALVE	EDGE OF PROPOSED ASPHALT
LAYOVER VALVE	POWER POLE
LAYOVER VALVE W/ BYPASS VA.	

The seal appearing on this document was authorized by
SHAWN C. CRAWFORD 91744
on Apr. 7 16 2010

STATE OF TEXAS
SHAWN C. CRAWFORD
91744
REGISTERED PROFESSIONAL ENGINEER

JOINT RESTRAINT NOTE:
CONTRACTOR SHALL INSTALL MEGALUGS AT ALL FITTINGS AND PROVIDE BELL RESTRAINT HARNESSES AT ALL JOINTS AS CALCULATED BY BMWD APPROVED PROGAMS AND VERIFIED BY INSPECTOR. CONTRACTOR SHALL INSURE THAT ALL TEES, BENDS. VALVES, ETC. HAVE A MINIMUM OF 5 FT OF PIPE WITH NO JOINTS ON EACH SIDE OF THE FITTING. CONTRACTOR SHALL INSTALL CONCRETE THRUST BLOCKING IN ACCORDANCE WITH BMWD STD. DRAWING 839 IN ADDITION TO JOINT RESTRAINTS UNLESS OTHERWISE DIRECTED BY THE BMWD. IT IS THE CONRACTOR'S REPONSIBILITY TO COORDINATE JOINT RESTRAINTS AND THRUST BLOCKING WITH THE BMWD INSPECTOR.

WATER SERVICE NOTE:
1. BORE ALL LONG SERVICES @ PAVED AREA ALONG MEMORIAL LANE, IN ACCORDANCE WITH BEXAR COUNTY PERMIT. ALL LONG SERVICES SHALL BE INSTALLED IN PVC SCH 80 CONDUIT SLEEVE, CONDUIT SHALL EXTEND A MINIMUM OF 5' BEYOND THE EDGE OF PAVEMENT.

2. SINGLE LONG SERVICES SHALL CONSIST OF A SIGNLE 3/4" TAP THAT PASSES THROUGH A 2" PVC SLEEVE AND SHALL BE EXTENDED 5' FROM THE EDGE OF PAVEMENT.

CONSTRUCTION NOTES:
1. OPEN CUT EXISTING DRIVEWAYS AND PLACE TEMPORARY PATCH.

2. DEFLECT WATER LINE, WITHIN MANUFACTURE'S LIMITS, TO AVOID DAMAGING ANY EXISTING TREES.

3. IF NEEDED, REMOVE MAILBOX AND REPLACE TO LIKE OR BETTER CONDITION.

4. ALL ASPHALT ROADWAY CROSSINGS ARE TO BE BORED IN CASING.

5. IF DURING THE INSTALLATION OF THE NEW WATER THE EXISTING SURFACE OF THE STREET IS DAMAGED, THE CONTRACTOR WILL BE REQUIRED TO PROVIDE A SINGLE SURFACE TREATMENT FOR THE ENTIRE STREET, AS DETERMINED BY THE COUNTY INSPECTOR.

TRENCH EXCAVATION SAFETY PROTECTION
Contractor and/ or contractor's independently retained employee or structural design/ geotechnical/ safety/ equipment consultant, if any, shall, review these plans and available geotechnical information and the anticipated installation site(s) within the project work area in order to implement contractor's trench excavation safety protection systems, programs and/ or procedures. the contractor's implementation of the systems, programs and/ or procedures shall provide for adequate trench excavation, safety protection that complies with as a minimum, OSHA standards for trench excavations. specifically, contractor and/ or contractor's independently retained employee or safety consultant shall implement a trench safety program in accordance with osha standards governing the presence and activities of individuals working in and around trench excavation.

WARNING!
CALL BEFORE YOU DIG!
DIG TESS
1-800-DIG-TESS
(AT LEAST 72 HOURS PRIOR TO DIGGING)

RECORD DRAWINGS NOTE:
BEXARMET CONSTRUCTION DEPARTMENT TO KEEP ALL FIELD NOTES, MEASUREMENTS, AND ASBUILTS TO SUBMIT TO ENGINEERING UPON COMPLETION OF PROJECT.

WARNING!
CONTRACTOR TO VERIFY ABOVE GROUND AND BURIED PRESENCE AND EXACT LOCATION OF ALL UTILITIES PRIOR TO CONSTRUCTION.

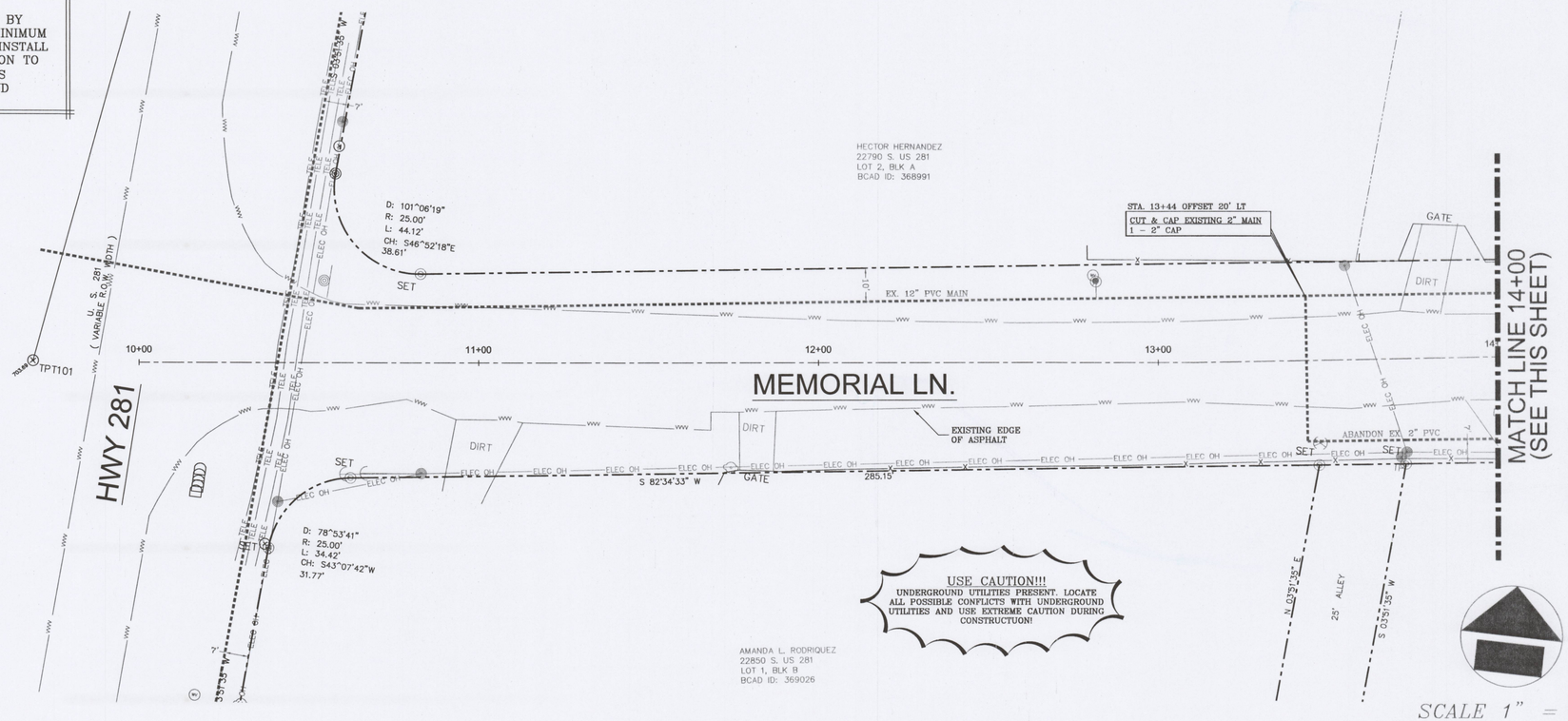

RESTRAINED LENGTH FOR PIPE							
PIPE DIA.	HORIZONTAL BENDS				VERTICAL BENDS		DEAD END/ INLINE VALVES
					UPPER	LOWER	
8"	1/4	1/8	1/16	1/32	1/8	1/8	
8"	31'	13'	6'	3'	17'	4'	74'

RESTRAINED LENGTH FOR TEES		
NOMINAL SIZE	SMALL SIZE	LENGTH
8"	8"	51'
8"	6"	26'

RESTRAINED LENGTH FOR REDUCERS		
NOMINAL SIZE	SMALL SIZE	LENGTH
12"	8"	56'
8"	4"	53'
8"	3"	60'

NOTES:
LENGTHS SHOWN ABOVE WERE COMPUTED USING EBAA RESTRAINT

1. LENGTH CALCULATOR BASED ON THE FOLLOWING VALUES:
   a. PIPE MATERIAL – PVC
   b. SAFETY FACTOR – 1.5 TO 1
   c. TEST PRESSURE – 150 psi
   d. SOIL DESIGNATION – ML – Inorganic silts, very fine sands, rock flour, silty or clayey fine sands. (Backfilled using Native Soil)

   e. DEPTH OF COVER – 4 feet (TYPICAL AND UPPER BEND)

2. LENGTHS FOR INLINE VALVES ARE FOR ONE SIDE OF THE VALVE ONLY. CONTRACTOR SHALL RESTRAIN THIS DISTANCE ON BOTH SIDES OF THE VALVE.

3. IF CONDITIONS DIFFER FROM ABOVE, CONTRACTOR IS TO MAKE OWN CALCULATIONS AND SUBMIT TO BMWD INSPECTOR FOR APPROVAL. (NSPI)

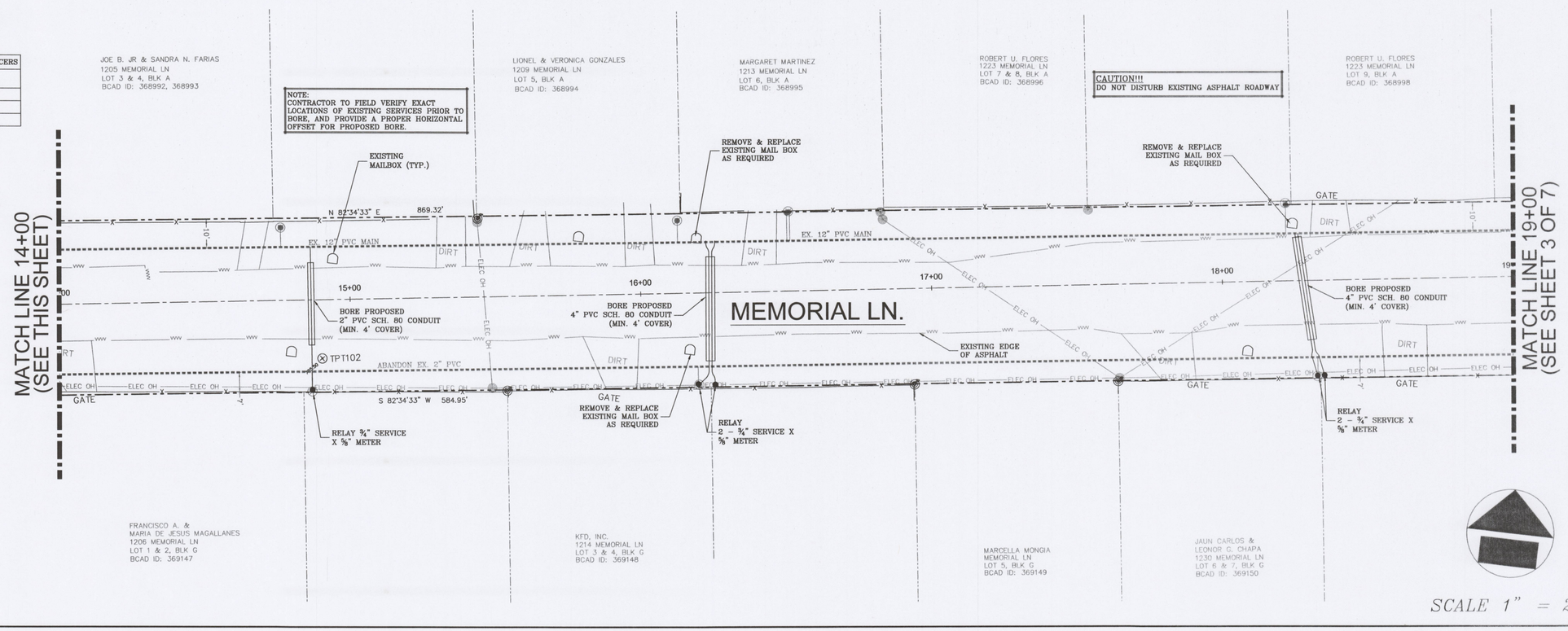

BEXAR METROPOLITAN WATER DISTRICT
ADMINISTRATIVE OFFICE: 2047 W. MALONE AVE.
P.O. BOX 245994
SAN ANTONIO, TEXAS 78225-2017
PHONE NO. (210) 354-6500
FAX NO. (210) 922-5152
SERVICE CENTER: 2055 W. MALONE AVE.
SAN ANTONIO, TEXAS 78225-2017
PHONE NO. (210) 354-6500
FAX NO. (210) 354-6593

BexarMet
WATER DISTRICT

Memorial Lane Main Replacement
8" Main Replacement
Hwy 281 to Little Walnut
"Memorial Ln., Sta. 10+00 To Sta. 19+00"

The seal appearing on this document was authorized by
SHAWN C. CRAWFORD 91744
on April 16, 2010

STATE OF TEXAS
SHAWN C. CRAWFORD
91744
REGISTERED
PROFESSIONAL ENGINEER

DESIGNED BY	DRAWN BY
SK	NRM
CHECKED BY	DATE
SCC	4/16/10

PROJECT NUMBER
J9020C/BP-091020A

SHEET 2 OF 7 SHEETS

JOINT RESTRAINT NOTE:
CONTRACTOR SHALL INSTALL MEGALUGS AT ALL FITTINGS AND PROVIDE BELL RESTRAINT HARNESSES AT ALL JOINTS AS CALCULATED BY BMWD APPROVED PROGAMS AND VERIFIED BY INSPECTOR. CONTRACTOR SHALL INSURE THAT ALL TEES, BENDS. VALVES, ETC. HAVE A MINIMUM OF 5 FT OF PIPE WITH NO JOINTS ON EACH SIDE OF THE FITTING. CONTRACTOR SHALL INSTALL CONCRETE THRUST BLOCKING IN ACCORDANCE WITH BMWD STD. DRAWING 839 IN ADDITION TO JOINT RESTRAINTS UNLESS OTHERWISE DIRECTED BY THE BMWD. IT IS THE CONRACTOR'S REPONSIBILITY TO COORDINATE JOINT RESTRAINTS AND THRUST BLOCKING WITH THE BMWD INSPECTOR.

WATER SERVICE NOTE:
1. BORE ALL LONG SERVICES @ PAVED AREA ALONG MEMORIAL LANE, IN ACCORDANCE WITH BEXAR COUNTY PERMIT. ALL LONG SERVICES SHALL BE INSTALLED IN PVC SCH 80 CONDUIT SLEEVE, CONDUIT SHALL EXTEND A MINIMUM OF 5' BEYOND THE EDGE OF PAVEMENT.

2. SINGLE LONG SERVICES SHALL CONSIST OF A SIGNLE 3/4" TAP THAT PASSES THROUGH A 2" PVC SLEEVE AND SHALL BE EXTENDED 5' FROM THE EDGE OF PAVEMENT.

CONSTRUCTION NOTES:
1. OPEN CUT EXISTING DRIVEWAYS AND PLACE TEMPORARY PATCH.

2. DEFLECT WATER LINE, WITHIN MANUFACTURE'S LIMITS, TO AVOID DAMAGING ANY EXISTING TREES.

3. IF NEEDED, REMOVE MAILBOX AND REPLACE TO LIKE OR BETTER CONDITION.

4. ALL ASPHALT ROADWAY CROSSINGS ARE TO BE BORED IN CASING.

5. IF DURING THE INSTALLATION OF THE NEW WATER THE EXISTING SURFACE OF THE STREET IS DAMAGED, THE CONTRACTOR WILL BE REQUIRED TO PROVIDE A SINGLE SURFACE TREATMENT FOR THE ENTIRE STREET, AS DETERMINED BY THE COUNTY INSPECTOR.

TRENCH EXCAVATION SAFETY PROTECTION
Contractor and/ or contractor's independently retained employee or structural design/ geotechnical/ safety/ equipment consultant, if any, shall, review these plans and available geotechnical information and the anticipated installation site(s) within the project work area in order to implement contractor's trench excavation safety protection systems, programs and/ or procedures. the contractor's implementation of the systems, programs and/ or procedures shall provide for adequate trench excavation, safety protection that complies with as a minimum, OSHA standards for trench excavations. specifically, contractor and/ or contractor's independently retained employee or safety consultant shall implement a trench safety program in accordance with osha standards governing the presence and activities of individuals working in and around trench excavation.

WARNING!
CALL BEFORE YOU DIG!
DIG TESS
1-800-DIG-TESS
(AT LEAST 72 HOURS PRIOR TO DIGGING)

WARNING!
CONTRACTOR TO VERIFY ABOVE GROUND AND BURIED PRESENCE AND EXACT LOCATION OF ALL UTILITIES PRIOR TO CONSTRUCTION.

RECORD DRAWINGS NOTE:
BEXARMET CONSTRUCTION DEPARTMENT TO KEEP ALL FIELD NOTES, MEASUREMENTS, AND ASBUILTS TO SUBMIT TO ENGINEERING UPON COMPLETION OF PROJECT.

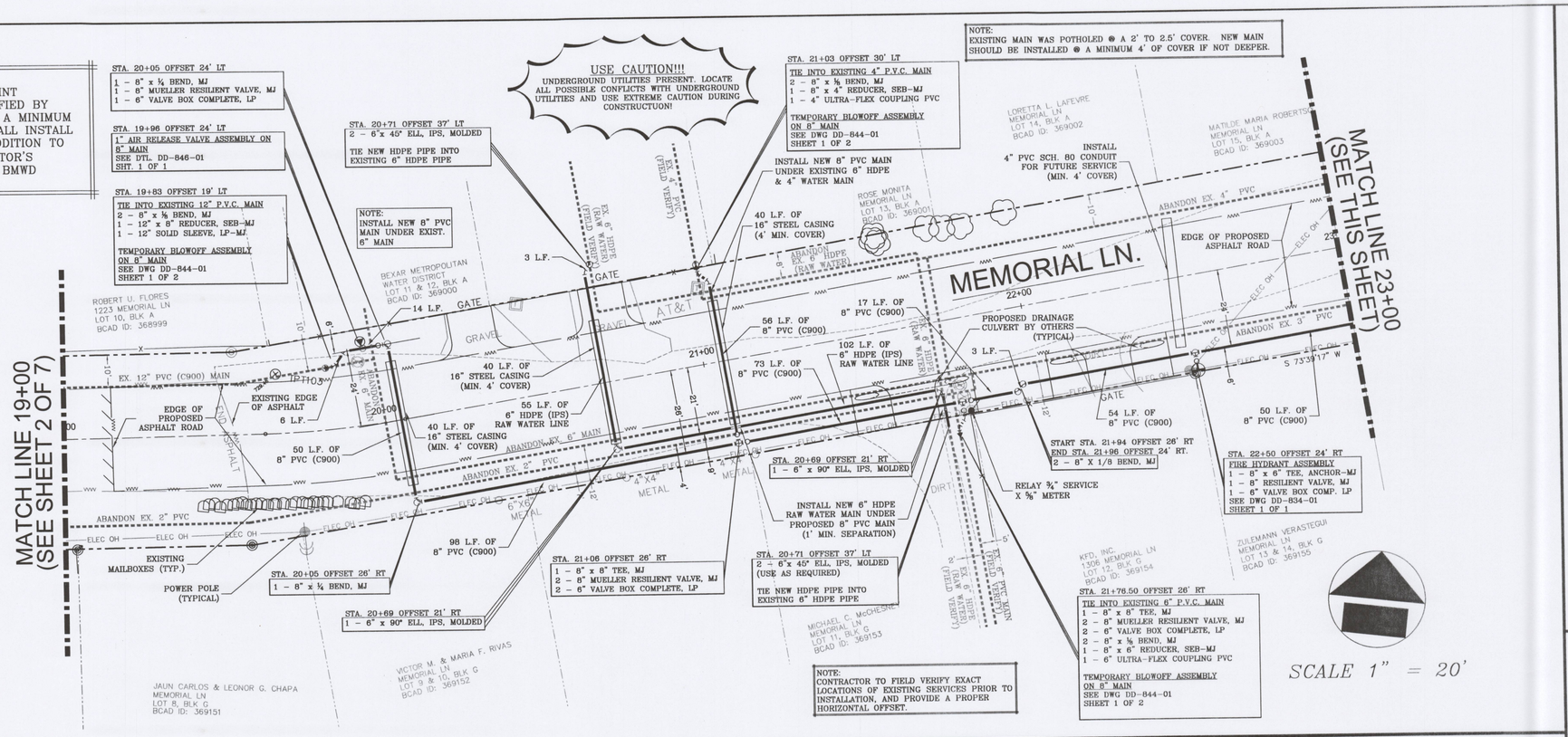

RESTRAINED LENGTH FOR PIPE							
PIPE DIA.	HORIZONTAL BENDS				VERTICAL BENDS		DEAD END/ INLINE VALVES
					UPPER	LOWER	
8"	1/4	1/8	1/16	1/32	1/8	1/8	
8"	31'	13'	6'	3'	17'	4'	74'

RESTRAINED LENGTH FOR TEES		
NOMINAL SIZE	SMALL SIZE	LENGTH
8"	8"	51'
8"	6"	26'

RESTRAINED LENGTH FOR REDUCERS		
NOMINAL SIZE	SMALL SIZE	LENGTH
12"	8"	56'
8"	4"	53'
8"	3"	60'

NOTES:
LENGTHS SHOWN ABOVE WERE COMPUTED USING EBAA RESTRAINT

1. LENGTH CALCULATOR BASED ON THE FOLLOWING VALUES:
   a. PIPE MATERIAL – PVC
   b. SAFETY FACTOR – 1.5 TO 1
   c. TEST PRESSURE – 150 psi
   d. SOIL DESIGNATION – ML – Inorganic silts, very fine sands, rock flour, silty or clayey fine sands. (Backfilled using Native Soil)
   e. DEPTH OF COVER – 4 feet (TYPICAL AND UPPER BEND)

2. LENGTHS FOR INLINE VALVES ARE FOR ONE SIDE OF THE VALVE ONLY. CONTRACTOR SHALL RESTRAIN THIS DISTANCE ON BOTH SIDES OF THE VALVE.

3. IF CONDITIONS DIFFER FROM ABOVE, CONTRACTOR IS TO MAKE OWN CALCULATIONS AND SUBMIT TO BMWD INSPECTOR FOR APPROVAL. (NSPI)

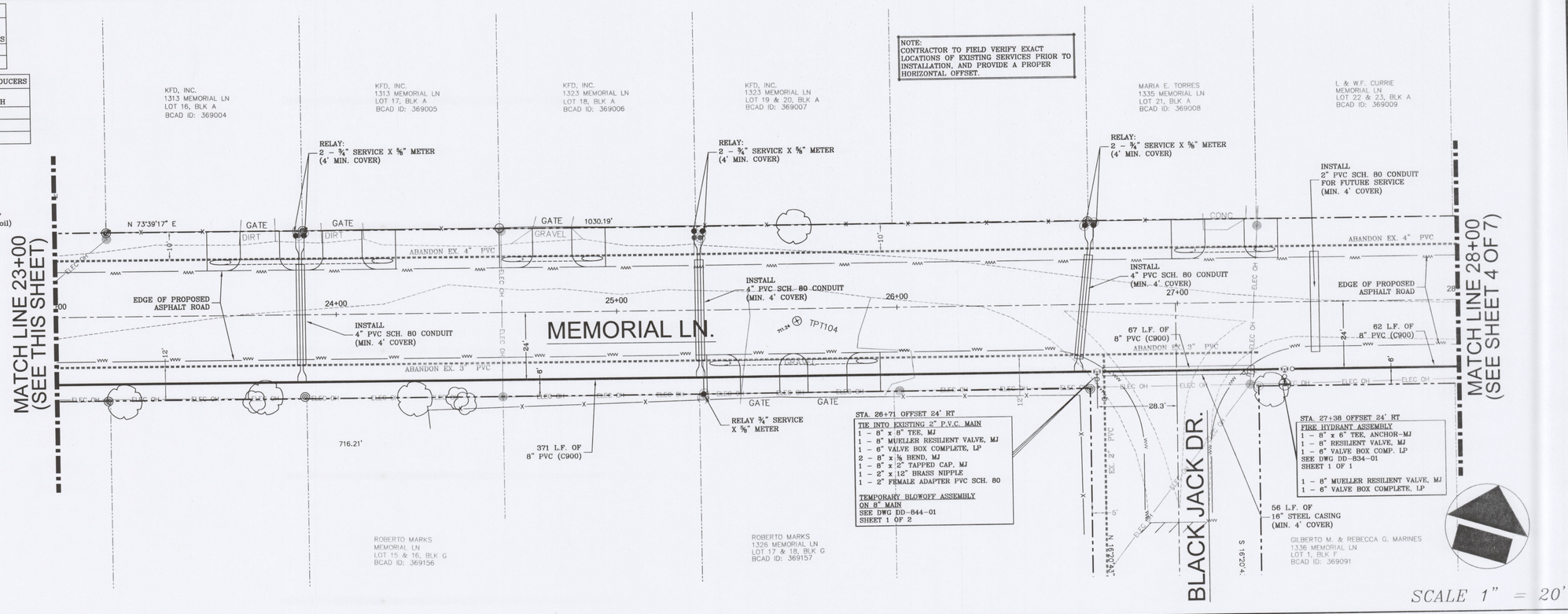

BEXAR METROPOLITAN WATER DISTRICT
ADMINISTRATIVE OFFICE: 2047 W. MALONE AVE. SAN ANTONIO, TEXAS 78225-2017 PHONE NO. (210) 354-6500 FAX NO. (210) 354-6152
SERVICE CENTER: 2055 W. MALONE AVE. SAN ANTONIO, TEXAS 78225-2017 PHONE NO. (210) 354-6500 FAX NO. (210) 354-6593

BexarMet WATER DISTRICT

Memorial Lane Main Replacement
8" Main Replacement
Hwy 281 to Little Walnut
"Memorial Ln., Sta. 19+00 To Sta. 28+00"

The seal appearing on this document was authorized by SHAWN C. CRAWFORD 91744 on 4/16/10

STATE OF TEXAS
SHAWN C. CRAWFORD
91744
REGISTERED PROFESSIONAL ENGINEER

DESIGNED BY	DRAWN BY
SK	NRM
CHECKED BY	DATE
SCC	4/16/10

PROJECT NUMBER
J9020C/BP-091020A

SHEET 3 OF 7 SHEETS

JOINT RESTRAINT NOTE:
CONTRACTOR SHALL INSTALL MEGALUGS AT ALL FITTINGS AND PROVIDE BELL RESTRAINT HARNESSES AT ALL JOINTS AS CALCULATED BY BMWD APPROVED PROGAMS AND VERIFIED BY INSPECTOR. CONTRACTOR SHALL INSURE THAT ALL TEES, BENDS. VALVES, ETC. HAVE A MINIMUM OF 5 FT OF PIPE WITH NO JOINTS ON EACH SIDE OF THE FITTING. CONTRACTOR SHALL INSTALL CONCRETE THRUST BLOCKING IN ACCORDANCE WITH BMWD STD. DRAWING 839 IN ADDITION TO JOINT RESTRAINTS UNLESS OTHERWISE DIRECTED BY THE BMWD. IT IS THE CONRACTOR'S REPONSIBILITY TO COORDINATE JOINT RESTRAINTS AND THRUST BLOCKING WITH THE BMWD INSPECTOR.

WATER SERVICE NOTE:
1. BORE ALL LONG SERVICES @ PAVED AREA ALONG MEMORIAL LANE, IN ACCORDANCE WITH BEXAR COUNTY PERMIT. ALL LONG SERVICES SHALL BE INSTALLED IN PVC SCH 80 CONDUIT SLEEVE, CONDUIT SHALL EXTEND A MINIMUM OF 5' BEYOND THE EDGE OF PAVEMENT.

2. SINGLE LONG SERVICES SHALL CONSIST OF A SIGNLE 3/4" TAP THAT PASSES THROUGH A 2" PVC SLEEVE AND SHALL BE EXTENDED 5' FROM THE EDGE OF PAVEMENT.

CONSTRUCTION NOTES:
1. OPEN CUT EXISTING DRIVEWAYS AND PLACE TEMPORARY PATCH.

2. DEFLECT WATER LINE, WITHIN MANUFACTURE'S LIMITS, TO AVOID DAMAGING ANY EXISTING TREES.

3. IF NEEDED, REMOVE MAILBOX AND REPLACE TO LIKE OR BETTER CONDITION.

4. ALL ASPHALT ROADWAY CROSSINGS ARE TO BE BORED IN CASING.

5. IF DURING THE INSTALLATION OF THE NEW WATER THE EXISTING SURFACE OF THE STREET IS DAMAGED, THE CONTRACTOR WILL BE REQUIRED TO PROVIDE A SINGLE SURFACE TREATMENT FOR THE ENTIRE STREET, AS DETERMINED BY THE COUNTY INSPECTOR.

TRENCH EXCAVATION SAFETY PROTECTION
Contractor and/ or contractor's independently retained employee or structural design/ geotechnical/ safety/ equipment consultant, if any, shall, review these plans and available geotechnical information and the anticipated installation site(s) within the project work area in order to implement contractor's trench excavation safety protection systems, programs and/ or procedures. the contractor's implementation of the systems, programs and/ or procedures shall provide for adequate trench excavation, safety protection that complies with as a minimum, OSHA standards for trench excavations. specifically, contractor and/ or contractor's independently retained employee or safety consultant shall implement a trench safety program in accordance with osha standards governing the presence and activities of individuals working in and around trench excavation.

WARNING!
CALL BEFORE YOU DIG!
DIG TESS
1-800-DIG-TESS
(AT LEAST 72 HOURS PRIOR TO DIGGING)

WARNING!
CONTRACTOR TO VERIFY ABOVE GROUND AND BURIED PRESENCE AND EXACT LOCATION OF ALL UTILITIES PRIOR TO CONSTRUCTION.

RECORD DRAWINGS NOTE:

BEXARMET CONSTRUCTION DEPARTMENT TO KEEP ALL FIELD NOTES, MEASUREMENTS, AND ASBUILTS TO SUBMIT TO ENGINEERING UPON COMPLETION OF PROJECT.

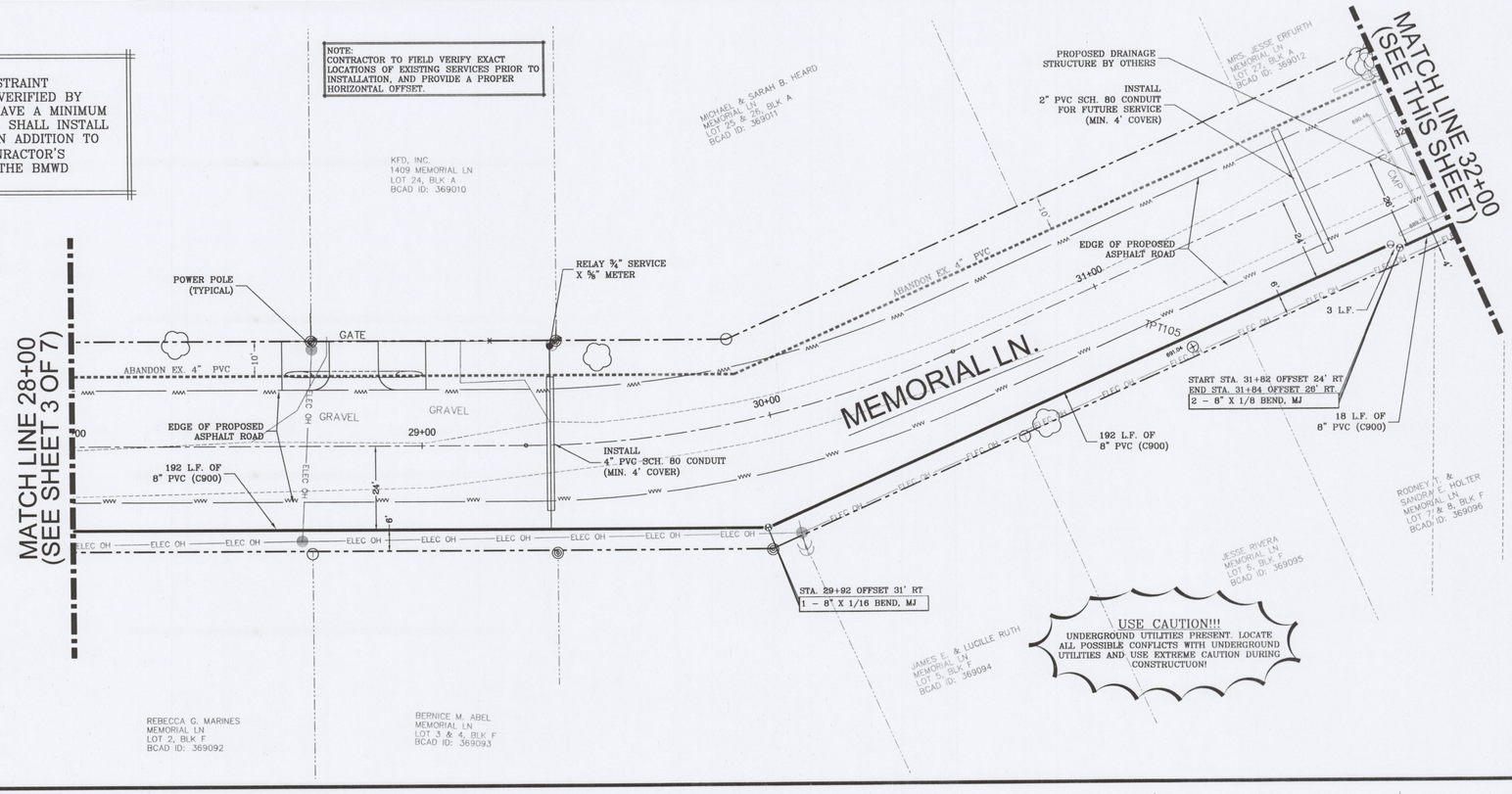

SCALE 1" = 20'

RESTRAINED LENGTH FOR PIPE							
PIPE DIA.	HORIZONTAL BENDS				VERTICAL BENDS		DEAD END/ INLINE VALVES
					UPPER	LOWER	
8"	1/4	1/8	1/16	1/32	1/8	1/8	
8"	31'	13'	6'	3'	17'	4'	74'

RESTRAINED LENGTH FOR TEES		
NOMINAL SIZE	SMALL SIZE	LENGTH
8"	8"	51'
8"	6"	26'

RESTRAINED LENGTH FOR REDUCERS		
NOMINAL SIZE	SMALL SIZE	LENGTH
12"	8"	56'
8"	4"	53'
8"	3"	60'

NOTES:
LENGTHS SHOWN ABOVE WERE COMPUTED USING EBAA RESTRAINT

1. LENGTH CALCULATOR BASED ON THE FOLLOWING VALUES:
   a. PIPE MATERIAL - PVC
   b. SAFETY FACTOR - 1.5 TO 1
   c. TEST PRESSURE - 150 psi
   d. SOIL DESIGNATION - ML - Inorganic silts, very fine sands, rock flour, silty or clayey fine sands. (Backfilled using Native Soil)

   e. DEPTH OF COVER - 4 feet (TYPICAL AND UPPER BEND)

2. LENGTHS FOR INLINE VALVES ARE FOR ONE SIDE OF THE VALVE ONLY. CONTRACTOR SHALL RESTRAIN THIS DISTANCE ON BOTH SIDES OF THE VALVE.

3. IF CONDITIONS DIFFER FROM ABOVE, CONTRACTOR IS TO MAKE OWN CALCULATIONS AND SUBMIT TO BMWD INSPECTOR FOR APPROVAL. (NSPI)

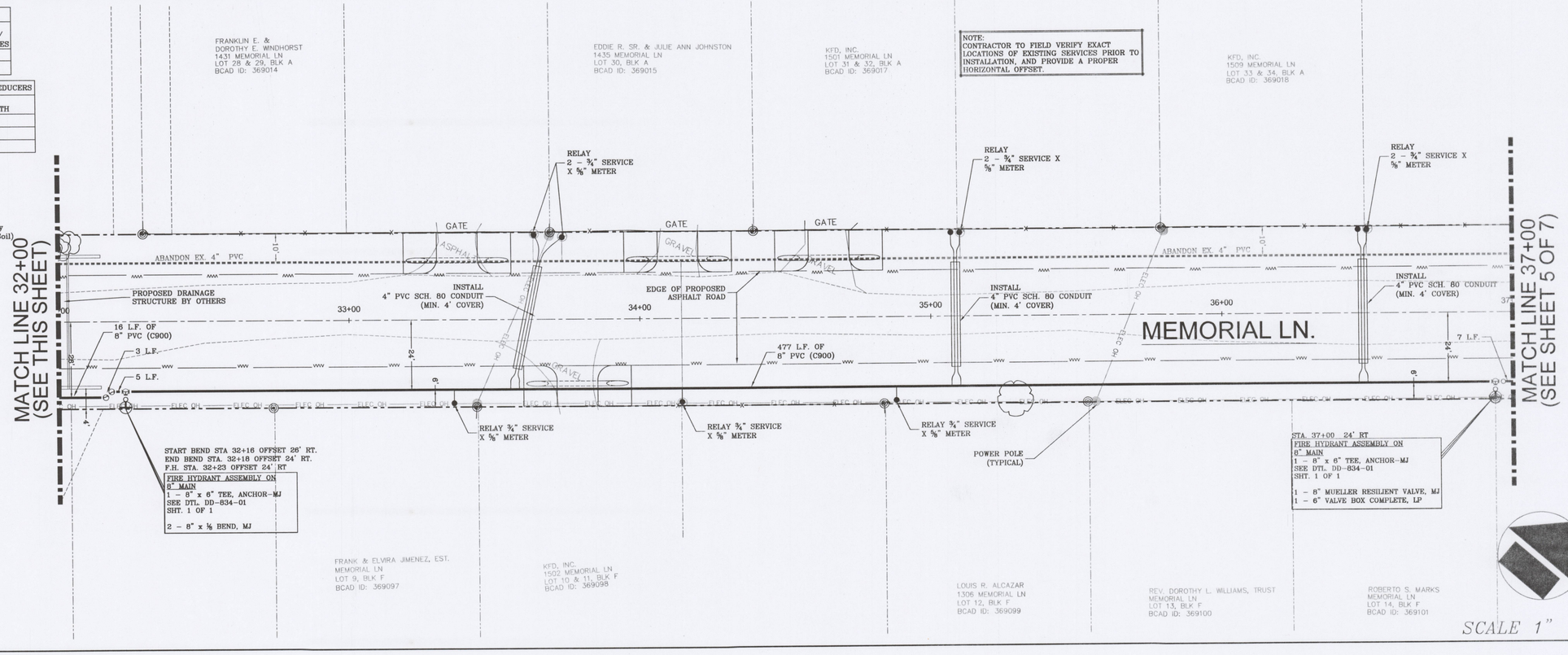

SCALE 1" = 20'

BEXAR METROPOLITAN WATER DISTRICT
ADMINISTRATIVE OFFICE: 2047 W. MALONE AVE.
P.O. BOX 245994
SAN ANTONIO, TEXAS 78225-2017
PHONE NO. (210) 354-6500
FAX NO. (210) 922-5152
SERVICE CENTER: 2055 W. MALONE AVE.
SAN ANTONIO, TEXAS 78225-2017
PHONE NO. (210) 354-6500
FAX NO. (210) 354-6593

BexarMet WATER DISTRICT

Memorial Lane Main Replacement
8" Main Replacement
Hwy 281 to Little Walnut
"Memorial Ln., Sta. 28+00 To Sta. 37+00"

The seal appearing on this document was authorized by SHAWN C. CRAWFORD 91744 on April 16, 2010

STATE OF TEXAS
SHAWN C. CRAWFORD
91744
REGISTERED PROFESSIONAL ENGINEER

DESIGNED BY	DRAWN BY
SK	NRM
CHECKED BY	DATE
SCC	4/16/10

PROJECT NUMBER
J9020C/BP-091020A

SHEET 4 OF 7 SHEETS

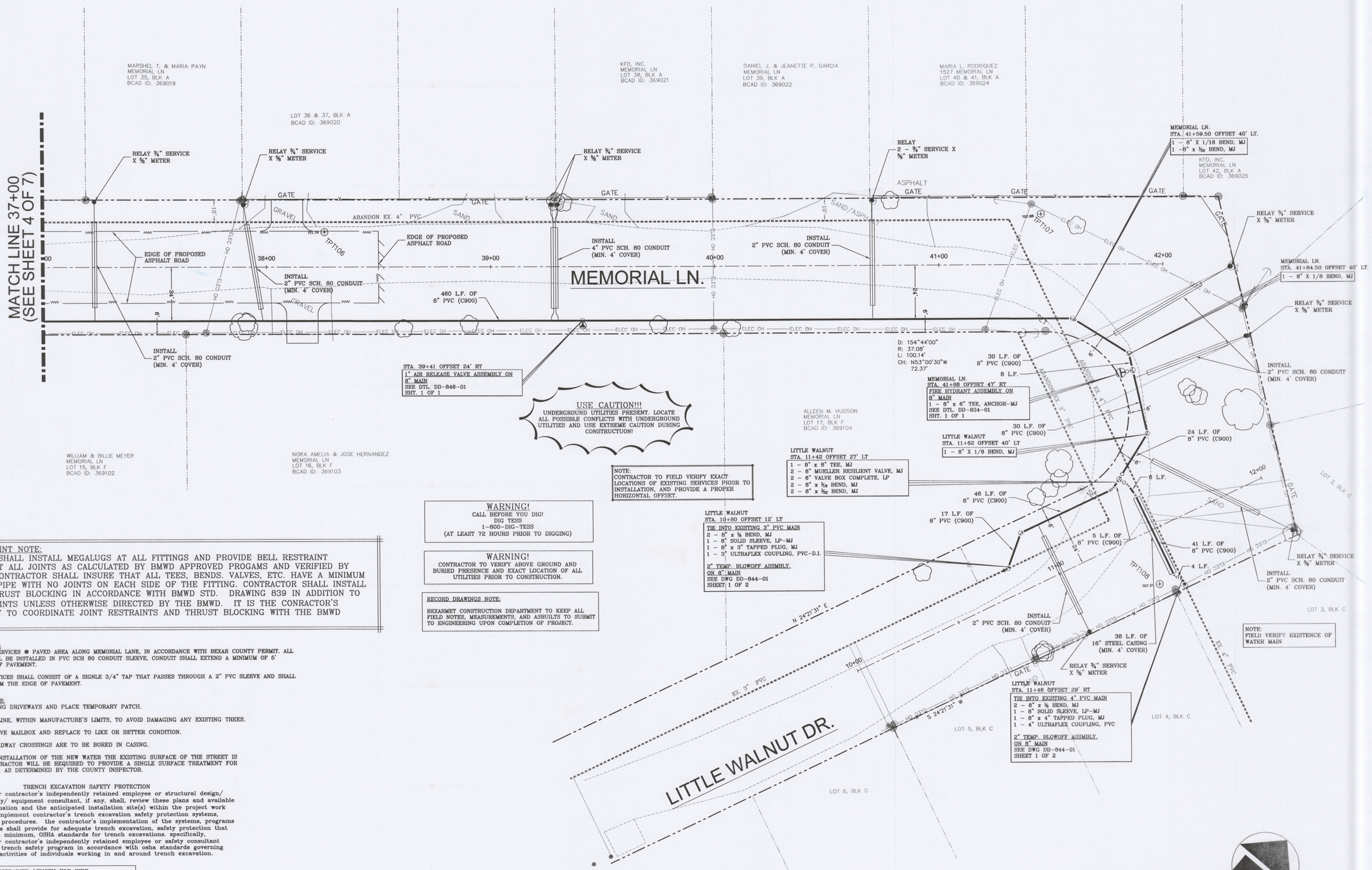

JOINT RESTRAINT NOTE:
CONTRACTOR SHALL INSTALL MEGALUGS AT ALL FITTINGS AND PROVIDE BELL RESTRAINT HARNESSES AT ALL JOINTS AS CALCULATED BY BMWD APPROVED PROGAMS AND VERIFIED BY INSPECTOR. CONTRACTOR SHALL INSURE THAT ALL TEES, BENDS. VALVES, ETC. HAVE A MINIMUM OF 5 FT OF PIPE WITH NO JOINTS ON EACH SIDE OF THE FITTING. CONTRACTOR SHALL INSTALL CONCRETE THRUST BLOCKING IN ACCORDANCE WITH BMWD STD. DRAWING 839 IN ADDITION TO JOINT RESTRAINTS UNLESS OTHERWISE DIRECTED BY THE BMWD. IT IS THE CONRACTOR'S REPONSIBILITY TO COORDINATE JOINT RESTRAINTS AND THRUST BLOCKING WITH THE BMWD INSPECTOR.

WATER SERVICE NOTE:
1. BORE ALL LONG SERVICES @ PAVED AREA ALONG MEMORIAL LANE, IN ACCORDANCE WITH BEXAR COUNTY PERMIT. ALL LONG SERVICES SHALL BE INSTALLED IN PVC SCH 80 CONDUIT SLEEVE, CONDUIT SHALL EXTEND A MINIMUM OF 5' BEYOND THE EDGE OF PAVEMENT.

2. SINGLE LONG SERVICES SHALL CONSIST OF A SIGNLE 3/4" TAP THAT PASSES THROUGH A 2" PVC SLEEVE AND SHALL BE EXTENDED 5' FROM THE EDGE OF PAVEMENT.

CONSTRUCTION NOTES:
1. OPEN CUT EXISTING DRIVEWAYS AND PLACE TEMPORARY PATCH.

2. DEFLECT WATER LINE, WITHIN MANUFACTURE'S LIMITS, TO AVOID DAMAGING ANY EXISTING TREES.

3. IF NEEDED, REMOVE MAILBOX AND REPLACE TO LIKE OR BETTER CONDITION.

4. ALL ASPHALT ROADWAY CROSSINGS ARE TO BE BORED IN CASING.

5. IF DURING THE INSTALLATION OF THE NEW WATER THE EXISTING SURFACE OF THE STREET IS DAMAGED, THE CONTRACTOR WILL BE REQUIRED TO PROVIDE A SINGLE SURFACE TREATMENT FOR THE ENTIRE STREET, AS DETERMINED BY THE COUNTY INSPECTOR.

TRENCH EXCAVATION SAFETY PROTECTION
Contractor and/ or contractor's independently retained employee or structural design/ geotechnical/ safety/ equipment consultant, if any, shall, review these plans and available geotechnical information and the anticipated installation site(s) within the project work area in order to implement contractor's trench excavation safety protection systems, programs and/ or procedures. the contractor's implementation of the systems, programs and/ or procedures shall provide for adequate trench excavation, safety protection that complies with as a minimum, OSHA standards for trench excavations. specifically, contractor and/ or contractor's independently retained employee or safety consultant shall implement a trench safety program in accordance with osha standards governing the presence and activities of individuals working in and around trench excavation.

RESTRAINED LENGTH FOR PIPE

PIPE DIA.	HORIZONTAL BENDS				VERTICAL BENDS		DEAD END/ INLINE VALVES
					UPPER	LOWER	
8"	1/4	1/8	1/16	1/32	1/8	1/8	
8"	31'	13'	6'	3'	17'	4'	74'

RESTRAINED LENGTH FOR TEES

NOMINAL SIZE	SMALL SIZE	LENGTH
8"	8"	51'
8"	6"	26'

RESTRAINED LENGTH FOR REDUCERS

NOMINAL SIZE	SMALL SIZE	LENGTH
12"	8"	56'
8"	4"	53'
8"	3"	60'

NOTES:
LENGTHS SHOWN ABOVE WERE COMPUTED USING EBAA RESTRAINT

1. LENGTH CALCULATOR BASED ON THE FOLLOWING VALUES:
   a. PIPE MATERIAL – PVC
   b. SAFETY FACTOR – 1.5 TO 1
   c. TEST PRESSURE – 150 psi
   d. SOIL DESIGNATION – ML – Inorganic silts, very fine sands, rock flour, silty or clayey fine sands. (Backfilled using Native Soil)
   e. DEPTH OF COVER – 4 feet (TYPICAL AND UPPER BEND)

2. LENGTHS FOR INLINE VALVES ARE FOR ONE SIDE OF THE VALVE ONLY. CONTRACTOR SHALL RESTRAIN THIS DISTANCE ON BOTH SIDES OF THE VALVE.

3. IF CONDITIONS DIFFER FROM ABOVE, CONTRACTOR IS TO MAKE OWN CALCULATIONS AND SUBMIT TO BMWD INSPECTOR FOR APPROVAL. (NSPI)

BEXAR METROPOLITAN WATER DISTRICT
SERVICE CENTER: 2055 W. MALONE AVE.
SAN ANTONIO, TEXAS 78225-2017
PHONE NO. (210) 354-6500
FAX NO. (210) 354-6593
ADMINISTRATIVE OFFICE: 2047 W. MALONE AVE.
P.O. BOX 245994
SAN ANTONIO, TEXAS 78225-2017
PHONE NO. (210) 354-6500
FAX NO. (210) 922-5152

BexarMet WATER DISTRICT

Memorial Lane Main Replacement
8" Main Replacement
Hwy 281 to Little Walnut
"Memorial Ln., Sta. 37+00 To Sta. 42+00"

The seal appearing on this document was authorized by SHAWN C. CRAWFORD 91744 on April 16, 2010

STATE OF TEXAS
SHAWN C. CRAWFORD
91744
REGISTERED PROFESSIONAL ENGINEER

DESIGNED BY	DRAWN BY
SK	NRM
CHECKED BY	DATE
SCC	4/16/10

PROJECT NUMBER
J9020C/BP-091020A

SHEET 5 OF 7 SHEETS

JOINT RESTRAINT NOTE:
CONTRACTOR SHALL INSTALL MEGALUGS AT ALL FITTINGS AND PROVIDE BELL RESTRAINT HARNESSES AT ALL JOINTS AS CALCULATED BY BMWD APPROVED PROGAMS AND VERIFIED BY INSPECTOR. CONTRACTOR SHALL INSURE THAT ALL TEES, BENDS. VALVES, ETC. HAVE A MINIMUM OF 5 FT OF PIPE WITH NO JOINTS ON EACH SIDE OF THE FITTING. CONTRACTOR SHALL INSTALL CONCRETE THRUST BLOCKING IN ACCORDANCE WITH BMWD STD. DRAWING 839 IN ADDITION TO JOINT RESTRAINTS UNLESS OTHERWISE DIRECTED BY THE BMWD. IT IS THE CONRACTOR'S REPONSIBILITY TO COORDINATE JOINT RESTRAINTS AND THRUST BLOCKING WITH THE BMWD INSPECTOR.

WATER SERVICE NOTE:
1. BORE ALL LONG SERVICES @ PAVED AREA ALONG MEMORIAL LANE, IN ACCORDANCE WITH BEXAR COUNTY PERMIT. ALL LONG SERVICES SHALL BE INSTALLED IN PVC SCH 80 CONDUIT SLEEVE, CONDUIT SHALL EXTEND A MINIMUM OF 5' BEYOND THE EDGE OF PAVEMENT.

2. SINGLE LONG SERVICES SHALL CONSIST OF A SIGNLE 3/4" TAP THAT PASSES THROUGH A 2" PVC SLEEVE AND SHALL BE EXTENDED 5' FROM THE EDGE OF PAVEMENT.

CONSTRUCTION NOTES:
1. OPEN CUT EXISTING DRIVEWAYS AND PLACE TEMPORARY PATCH.

2. DEFLECT WATER LINE, WITHIN MANUFACTURE'S LIMITS, TO AVOID DAMAGING ANY EXISTING TREES.

3. IF NEEDED, REMOVE MAILBOX AND REPLACE TO LIKE OR BETTER CONDITION.

4. ALL ASPHALT ROADWAY CROSSINGS ARE TO BE BORED IN CASING.

5. IF DURING THE INSTALLATION OF THE NEW WATER THE EXISTING SURFACE OF THE STREET IS DAMAGED, THE CONTRACTOR WILL BE REQUIRED TO PROVIDE A SINGLE SURFACE TREATMENT FOR THE ENTIRE STREET, AS DETERMINED BY THE COUNTY INSPECTOR.

TRENCH EXCAVATION SAFETY PROTECTION

Contractor and/ or contractor's independently retained employee or structural design/ geotechnical/ safety/ equipment consultant, if any, shall, review these plans and available geotechnical information and the anticipated installation site(s) within the project work area in order to implement contractor's trench excavation safety protection systems, programs and/ or procedures. the contractor's implementation of the systems, programs and/ or procedures shall provide for adequate trench excavation, safety protection that complies with as a minimum, OSHA standards for trench excavations. specifically, contractor and/ or contractor's independently retained employee or safety consultant shall implement a trench safety program in accordance with osha standards governing the presence and activities of individuals working in and around trench excavation.

RESTRAINED LENGTH FOR PIPE

PIPE DIA.	HORIZONTAL BENDS				VERTICAL BENDS		DEAD END/ INLINE VALVES
					UPPER	LOWER	
8"	1/4	1/8	1/16	1/32	1/8	1/8	
8"	31'	13'	6'	3'	17'	4'	74'

RESTRAINED LENGTH FOR TEES

NOMINAL SIZE	SMALL SIZE	LENGTH
8"	8"	51'
8"	6"	26'

RESTRAINED LENGTH FOR REDUCERS

NOMINAL SIZE	SMALL SIZE	LENGTH
12"	8"	56'
8"	4"	53'
8"	3"	60'

NOTES:
LENGTHS SHOWN ABOVE WERE COMPUTED USING EBAA RESTRAINT

1. LENGTH CALCULATOR BASED ON THE FOLLOWING VALUES:
   a. PIPE MATERIAL – PVC
   b. SAFETY FACTOR – 1.5 TO 1
   c. TEST PRESSURE – 150 psi
   d. SOIL DESIGNATION – ML – Inorganic silts, very fine sands, rock flour, silty or clayey fine sands. (Backfilled using Native Soil)

   e. DEPTH OF COVER – 4 feet (TYPICAL AND UPPER BEND)

2. LENGTHS FOR INLINE VALVES ARE FOR ONE SIDE OF THE VALVE ONLY. CONTRACTOR SHALL RESTRAIN THIS DISTANCE ON BOTH SIDES OF THE VALVE.

3. IF CONDITIONS DIFFER FROM ABOVE, CONTRACTOR IS TO MAKE OWN CALCULATIONS AND SUBMIT TO BMWD INSPECTOR FOR APPROVAL. (NSPI)

WARNING!
CALL BEFORE YOU DIG!
DIG TESS
1-800-DIG-TESS
(AT LEAST 72 HOURS PRIOR TO DIGGING)

WARNING!
CONTRACTOR TO VERIFY ABOVE GROUND AND BURIED PRESENCE AND EXACT LOCATION OF ALL UTILITIES PRIOR TO CONSTRUCTION.

RECORD DRAWINGS NOTE:

BEXARMET CONSTRUCTION DEPARTMENT TO KEEP ALL FIELD NOTES, MEASUREMENTS, AND ASBUILTS TO SUBMIT TO ENGINEERING UPON COMPLETION OF PROJECT.

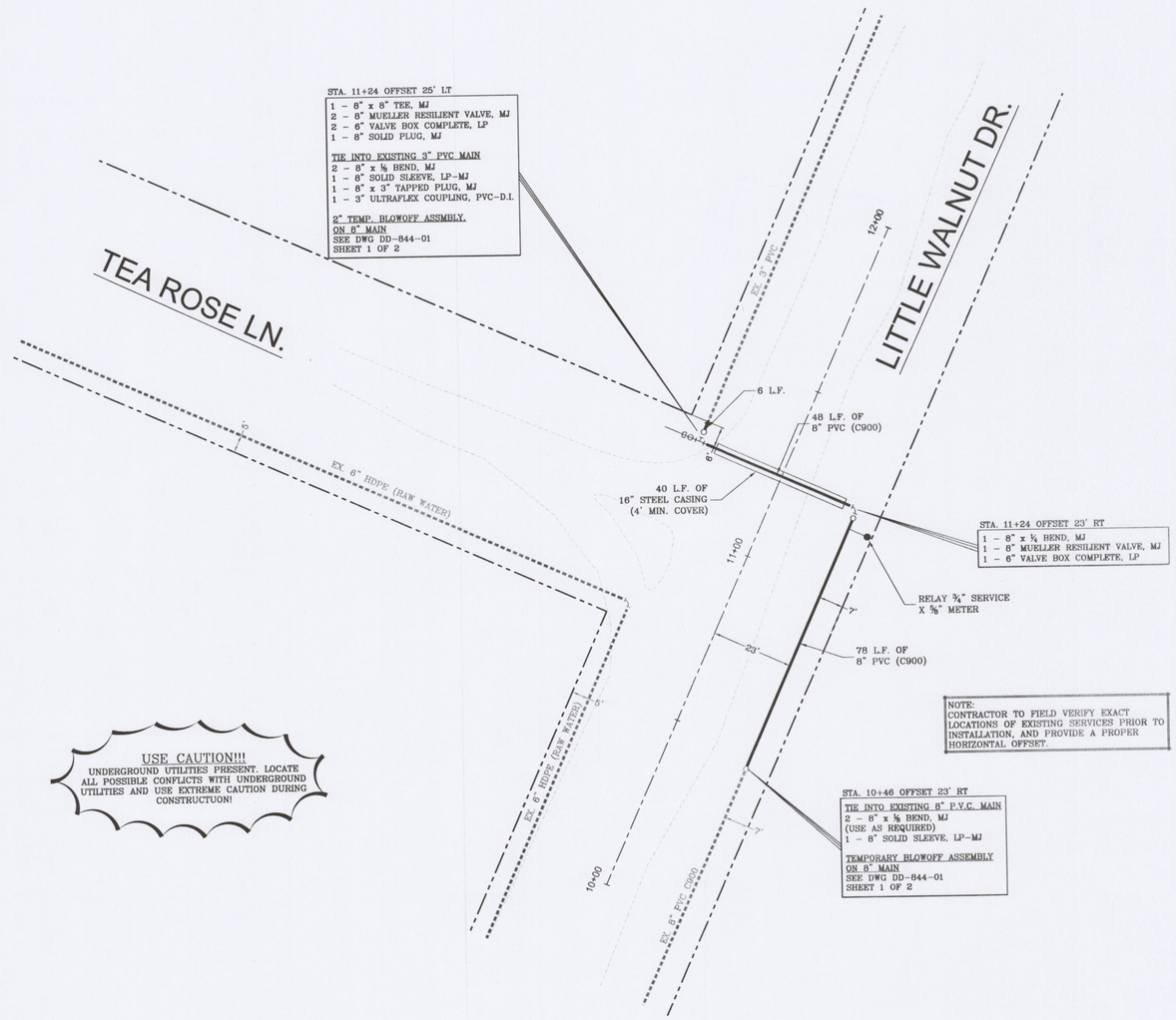

SCALE 1" = 20'

BEXAR METROPOLITAN WATER DISTRICT

SERVICE CENTER: 2055 W. MALONE AVE.
SAN ANTONIO, TEXAS 78225-2017
PHONE NO. (210) 354-6500
FAX NO. (210) 354-6593

ADMINISTRATIVE OFFICE: 2047 W. MALONE AVE.
P.O. BOX 245994
SAN ANTONIO, TEXAS 78225-2017
PHONE NO. (210) 354-6500
FAX NO. (210) 922-5152

BexarMet WATER DISTRICT

Memorial Lane Main Replacement
8" Main Replacement
Hwy 281 to Little Walnut
"Little Walnut Tie In @ Tea Rose"

The seal appearing on this document was authorized by SHAWN C. CRAWFORD 91744 on 4/20/10

STATE OF TEXAS
SHAWN C. CRAWFORD
91744
REGISTERED PROFESSIONAL ENGINEER

DESIGNED BY	DRAWN BY
SK	NRM
CHECKED BY	DATE
SCC	4/16/10

PROJECT NUMBER
J9020C/BP-091020A

SHEET 6 OF 7 SHEETS

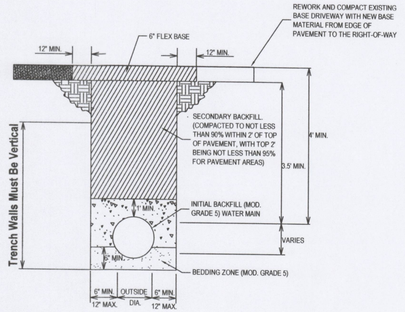

* ALL WORK SHALL MEET THE REQUIREMENTS OF THE PERMIT (IF REQUIRED) ISSUED BY THE CITY, COUNTY OR STATE.

WATER MAIN TRENCH IN PROPOSED BASE DRIVEWAY CROSSING (SPEC. 804)

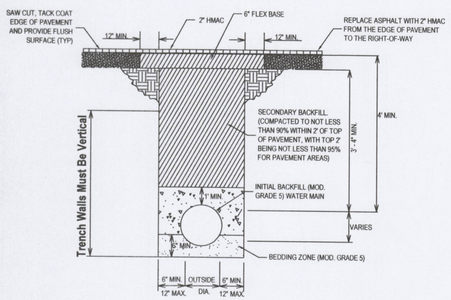

* ALL WORK SHALL MEET THE REQUIREMENTS OF THE PERMIT (IF REQUIRED) ISSUED BY THE CITY, COUNTY OR STATE.

WATER MAIN TRENCH IN PROPOSED ASPHALT DRIVEWAY CROSSING (SPEC. 804)

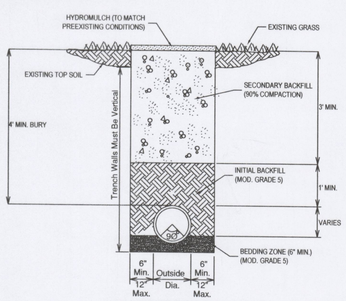

OUTSIDE PAVEMENT - PARKWAY

(SPEC. 804)

Notes:
1. Embed all exterior metal surfaces in silica sand
2. All reinforcing bars in the Reaction Block shall be #4
3. Tapped Cap may be used in lieu of Eccentric Reducer

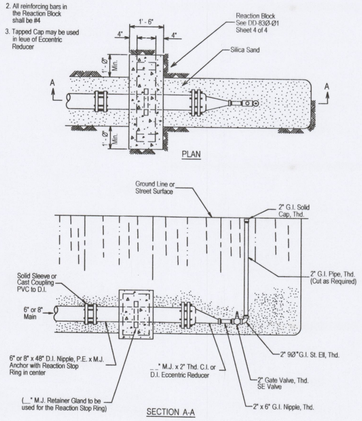

2" TEMPORARY BLOW-OFF ASSEMBLY ON 6" & 8" MAINS

DD-844-01

SHEET 1 OF 2

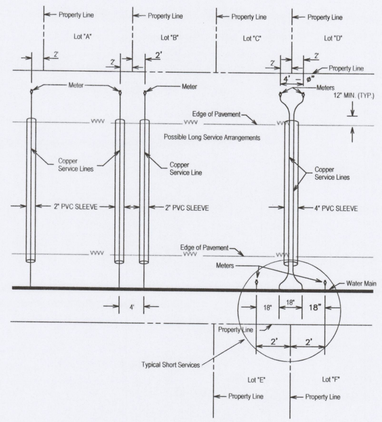

UNIMPROVED STREET 3/4" THRU 1" SERVICE

TYPICAL SERVICE ARRANGEMENT

DD-824-Ø5

SHEET 1 OF 3

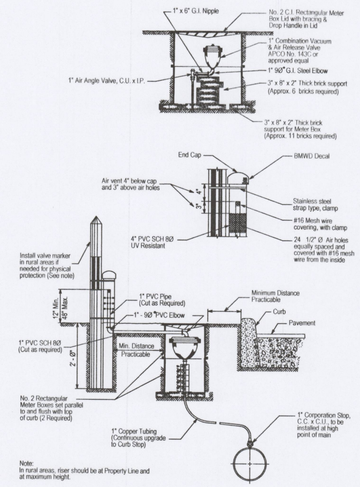

INSTALLATION OF 1" AIR RELEASE VALVE

DD-846-Ø1

SHEET 1 OF 1

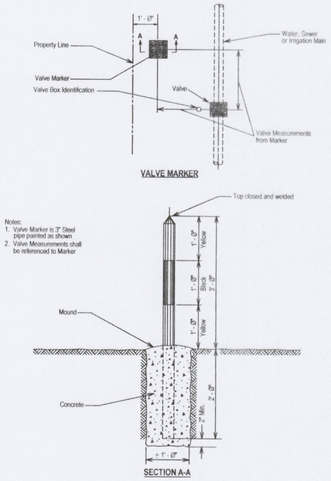

VALVE MARKER

DD-828-Ø4

SHEET 1 OF 3

Note:
Steel Casing shall be extended 5' beyond front the edge of each side of driveway

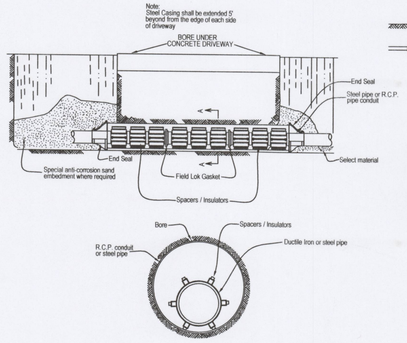

PAVEMENT INSTALLATION OF PIPE IN BORE

DD-856-02

SHEET 3 OF 4

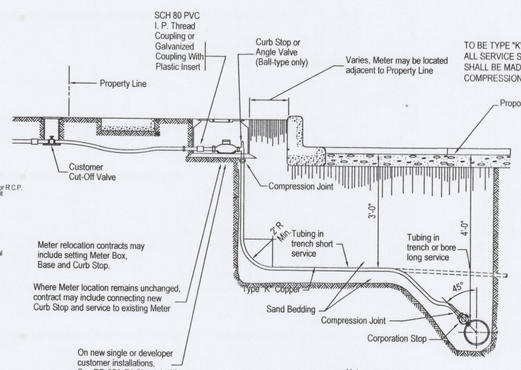

TO BE TYPE "K" COPPER. ALL SERVICE SIDE CONNECTIONS SHALL BE MADE WITH APPROVED COMPRESSION JOINT FITTINGS.

SERVICE RELAY, SERVICE AND METER RELOCATION

SERVICE RELAY, SERVICE RELOCATION 3/4" THRU 2"

DD-824-Ø2

SHEET 1 OF 1

NOTE:
ALL EXISTING SHORT SERVICES AND SINGLE LONG SERVICES ARE 3/4".

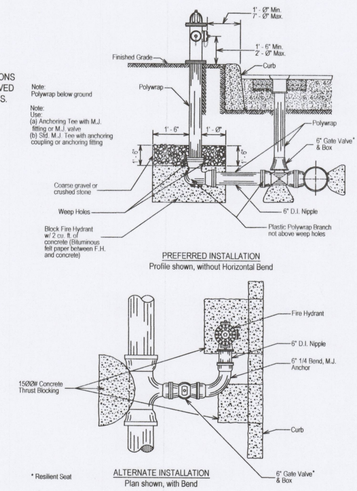

Note:
Use:
(a) Anchoring Tee with M.J. fitting or M.J. valve
(b) Std. M.J. Tee with anchoring coupling or anchoring fitting

FIRE HYDRANT INSTALLATION

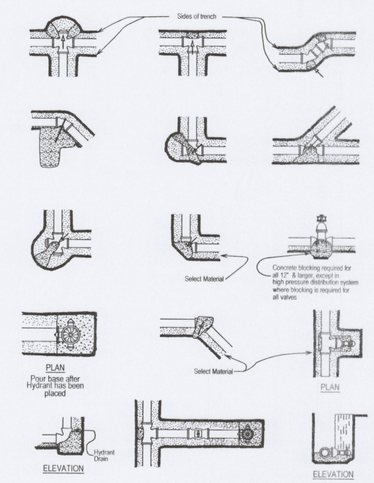

THRUST BLOCKS FOR FITTINGS (WATER ONLY)

DD-839-Ø1

SHEET 1 OF 1

BEXAR METROPOLITAN WATER DISTRICT

ADMINISTRATIVE OFFICE: 2047 W. MALONE AVE.
P.O. BOX 245994
SAN ANTONIO, TEXAS 78225-2017
PHONE NO. (210) 354-6500
FAX NO. (210) 922-5152

SERVICE CENTER: 2055 W. MALONE AVE.
SAN ANTONIO, TEXAS 78225-2017
PHONE NO. (210) 354-6500
FAX NO. (210) 354-6593

BexarMet WATER DISTRICT

Memorial Lane Main Replacement
8" Main Replacement
Hwy 281 to Little Walnut
"Water Details Sheet"

The seal appearing on this document was authorized by SHAWN C. CRAWFORD 91744 on April 16th 10.

STATE OF TEXAS
SHAWN C. CRAWFORD
91744
REGISTERED PROFESSIONAL ENGINEER

DESIGNED BY	DRAWN BY
SK	NRM
CHECKED BY	DATE
SCC	4/16/10

PROJECT NUMBER
J9020C/BP-091020A

SHEET 7 OF 7 SHEETS