INFRASTRUCTURE SERVICES DEPARTMENT
PUBLIC WORKS DIVISION

"TDLR INSPECTION REQUIRED"
"TDLR NO."
ADT (2005) = 14,400
ADT (2025) = 23,900

F.M. 2696
(BLANCO ROAD)

0.1 MI. S. OF GLADE CROSSING TO
0.2 MI. N. OF WEST OAK ESTATES
TxDOT CCSJ: 2708-01-022
DESIGN SPEED = 45 MPH

NELSON W. WOLFF	BEXAR COUNTY JUDGE
SERGIO "CHICO" RODRIGUEZ	COMMISSIONER PCT. 1
PAUL ELIZONDO	COMMISSIONER PCT. 2
LYLE LARSON	COMMISSIONER PCT. 3
TOMMY ADKISSON	COMMISSIONER PCT. 4
JOE ACEVES, P.E.	EXECUTIVE DIRECTOR OF INFRASTRUCTURE SERVICES
RENEE D. GREEN, P.E.	COUNTY ENGINEER

END PROJECT
STA 213+00.00

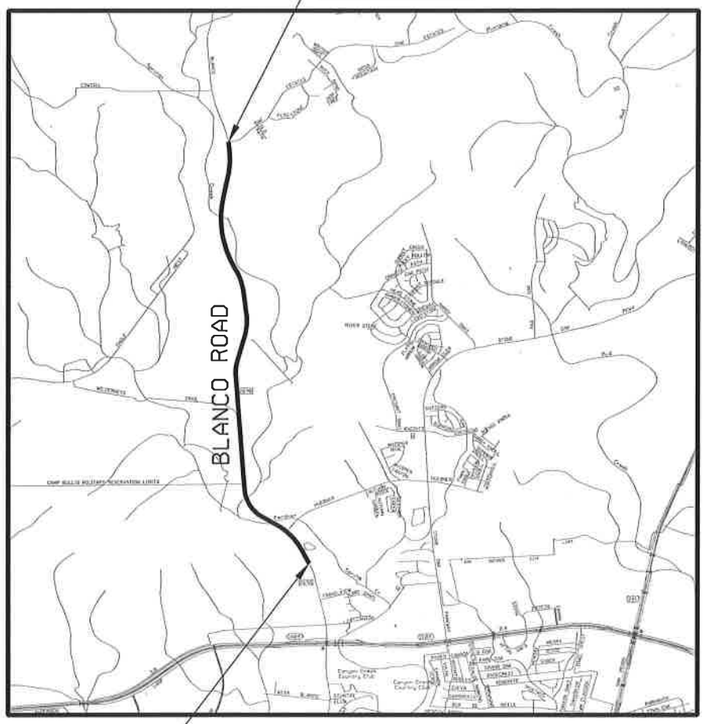

BEGIN PROJECT
STA 4+50.00

N

BEXAR COUNTY

PREPARED BY:

CP&Y

Chiang, Patel & Yerby, Inc.

VOLUME II

pw:/Active Projects/BEX6102/8.00 Plans and Drawings/8.10 Cut Sheets/8.1.06 General/6102CSRDGY01.dgn
12/6/2007 7:51:28 AM

INDEX OF SHEETS

SHEET NO.	DESCRIPTION
VOLUME I	I. GENERAL
1	TITLE SHEET
2	⚠2 INDEX OF SHEETS
3 - 8	PROJECT LAYOUT
9 - 14	⚠1 TYPICAL SECTIONS
15 - 17	⚠2 GRADING SUMMARY
18 - 26	EARTHWORK SUMMARY
27	DRIVEWAY SUMMARY
28	RETAINING WALL SUMMARY
29	CULVERT QUANTITY SUMMARY
30 - 31	⚠2 STORM SEWER SUMMARY
32 - 33	BEXARMET WATER MAIN REPLACEMENT SUMMARY
34	DUCTBANK SUMMARY
35	CPS GAS SUMMARY
36 - 46	TRAFFIC CONTROL PLAN SUMMARY
47	CRASH CUSHION ATTENUATOR SUMMARY
48	TRAFFIC SIGNALIZATION SUMMARY
49	TEMPORARY TRAFFIC SIGNALIZATION SUMMARY
50	SIGNING SUMMARY
51	PAVEMENT MARKINGS SUMMARY
52 - 54	SUMMARY OF SMALL SIGNS
55 - 59	SW3P SUMMARY
	II. TRAFFIC CONTROL PLAN
60 - 62	⚠1 TRAFFIC CONTROL PLAN NARRATIVE
63	TRAFFIC CONTROL AND SCHEDULE OF ADVANCED WARNING SIGNS
64 - 65	TRAFFIC CONTROL PLAN HORIZONTAL ALIGNMENT DATA SHEETS
66 - 73	⚠1 TRAFFIC CONTROL PLAN TYPICAL SECTIONS
74 - 80	TRAFFIC CONTROL PLAN DETOURS
81 - 86	TRAFFIC CONTROL PLAN HUEBNER DETOURS
87 - 88	TRAFFIC CONTROL PLAN TEMPORARY SHORING
89 - 94	TRAFFIC CONTROL PLAN ADVANCE WARNING SIGNS & REGULATORY SIGNS
95 - 101	TRAFFIC CONTROL PLAN PHASE 1 STAGE 2
102 - 106	TRAFFIC CONTROL PLAN PHASE 2 STAGE 1
107	TRAFFIC CONTROL PLAN PHASE 2 STAGE 2
108	TRAFFIC CONTROL PLAN PHASE 2 STAGE 3 STEP 1
109	TRAFFIC CONTROL PLAN PHASE 2 STAGE 3 STEP 2
110 - 114	TRAFFIC CONTROL PLAN PHASE 2 STAGE 4
115	TRAFFIC CONTROL PLAN PHASE 2 STAGE 5 STEP 1
116	TRAFFIC CONTROL PLAN PHASE 2 STAGE 5 STEP 2
117 - 120	TRAFFIC CONTROL PLAN PHASE 2 STAGE 6
121 - 126	TRAFFIC CONTROL PLAN PHASE 3 STAGE 1
127 - 132	TRAFFIC CONTROL PLAN PHASE 3 STAGE 2
133 - 137	TRAFFIC CONTROL PLAN PHASE 3 STAGE 3
138 - 143	TRAFFIC CONTROL PLAN PHASE 4 STAGE 1
144 - 149	TRAFFIC CONTROL PLAN PHASE 4 STAGE 2
150 - 154	TRAFFIC CONTROL PLAN PHASE 4 STAGE 3
155 - 163	TRAFFIC CONTROL PLAN PHASE 4 STAGE 4
164 - 172	TRAFFIC CONTROL PLAN PHASE 4 STAGE 5
173 - 181	TRAFFIC CONTROL PLAN PHASE 4 STAGE 6
182	TEMPORARY SIGNAL LAYOUT PH 2-STAGES 1&2
183	TEMPORARY SIGNAL LAYOUT PH 2-STAGE 3-STEP 1
184	TEMPORARY SIGNAL LAYOUT PH 2-STAGE 3-STEP 2
185	TEMPORARY SIGNAL LAYOUT PH 2-STAGE 4
186	TEMPORARY SIGNAL LAYOUT PH 2-STAGE 5-STEP 1
187	TEMPORARY SIGNAL LAYOUT PH 2-STAGE 5-STEP 2
188	TEMPORARY SIGNAL LAYOUT PH 3-STAGE 1
189	TEMPORARY SIGNAL LAYOUT PH 3-STAGE 2
189A	VIA (SFPM)
	STATE STANDARDS
190 - 201	BC(1 THRU 12)-07
202	WZ(BTS-1)-03
203	WZ(BTS-2)-03
204	WZ(TD)-03
206	WZ(STPM)-03
206	WZ(UL)-03
207	WZ(BRK)-03
208 - 211	TCP(1-1)-98 THRU TCP(1-4)-98
212	TCP(2-1)-98
213	TCP(2-2)-03
214	TCP(2-3)-03
215	TCP(2-4)-03
216	TCP(2-5)-03
217	TCP(2-7)-03
218	TCP(3-1)-98
219	TCP(3-3)-98
220	TCP(7-1)-98
221	EDGE CONDITION TREATMENT TYPES
222	SSCB(1)-99
223	SSCB(2)-00A
224 - 226	CSB(1)-04 THRU CSB(3)-04
227	QUAD (N)-99
228	TRACC(N)-05
228A	ABSORB-05
228B	LPCB(1)-92
228C	LPCB(2)-92
	III. ROADWAY
229 - 231	HORIZONTAL ALIGNMENT DATA SHEET
232 - 272	PLAN & PROFILE
273 - 286	CROSS STREET PLAN & PROFILE
287 - 300	INTERSECTION LAYOUTS
301 - 305	DRIVEWAY PROFILES
306 - 311C	⚠1 MISCELLANEOUS ROADWAY DETAILS
311D	RAIL RETROFIT
	STATE STANDARDS
312	BED-03
313	CCCG-01
314	CRR
315 - 317	MB-06(1)
318	MBGF-03A
319	MBGF(TR)-05
320	⚠1 PR1
321 - 324	PED-05 (MOD)
325 - 327	PRD-06 (MOD)
328	SGT(7)-03A
329	SGT(8)-03A

SHEET NO.	DESCRIPTION
VOLUME I	IV. RETAINING WALLS
330 - 334	RETAINING WALL KEY MAP
335 - 348	⚠2 RETAINING WALL PLAN & PROFILE
349 - 351	RETAINING WALL MISCELLANEOUS DETAILS
	STATE STANDARDS
351A	MS-03
352	RW(MSE)
353	RW(CB)
354	RW(TRF)
355	RW 1(H)A
356	RW 1(H)B
357	RW 1(H)C
358	RW 2
	V. DRAINAGE
359	EXTERIOR DRAINAGE AREA MAP
360 - 369	INTERIOR DRAINAGE AREA MAP
370 - 373	DRAINAGE AREA CALCULATIONS
374 - 383	HYDRAULIC CALCULATIONS
384 - 388	HYDRAULIC DATA SHEET BRIDGE CLASS STRUCTURES
389 - 400	HYDRAULIC DATA SHEET NON-BRIDGE CLASS STRUCTURES
401 - 408	CULVERT LAYOUTS
409 - 449	⚠2 STORM DRAIN PLAN AND PROFILE
450 - 452	STORM DRAIN PROFILES
452A - 452C	MISCELLANEOUS DRAINAGE DETAILS
453	TYPE A CURB INLET DETAILS
454	TYPE B CURB INLET DETAILS
455	BRIDGE CLASS CULVERT DETAILS
456 - 462	RIPRAP LAYOUTS
	STATE STANDARDS
462A-462B	SD
463	SCP-3
464	SCP-4
465	SCP-5
466	SCP-6
466A	SCP-MD
467	MC-MD
468	MC-8-13
469	ECD
470	BCS
471	PW
472	CH-FW-0
473	CH-FW-45
474	CH-PW-0
475 - 476	SETB-CD (MOD)
477	FW-0
478	SW-0
479	SHEET OMITTED
480	IL-C
481 - 482	IL-H-G
483	MH-M
	STATE STANDARDS (SAN ANTONIO DISTRICT)
485 - 484	CURB INLET TYPE C W/ EXTENSION
486	TRAFFIC INLET TYPE W-1 THRU W-5
487	TYPE 6 TRAFFIC GRATE
488	RIPRAP HEADWALL
VOLUME II	VI. UTILITIES
488A - 505	⚠1 EXISTING UTILITY LAYOUTS
508 - 509	BEXARMET WATER MAIN REPLACEMENT TITLE SHEET
510 - 524	BEXARMET WATER MAIN REPLACEMENT LAYOUTS
525 - 536	SHEETS OMITTED
537 - 539	BEXARMET WATER MAIN REPLACEMENT PROFILES
540 - 553	BEXARMET WATER MAIN REPLACEMENT DETAILS
552A	CPS ENERGY DUCTBANK HORIZONTAL ALIGNMENT DATA
553 - 561	CPS ENERGY DUCTBANK PLAN AND PROFILE
562 - 563	CPS ENERGY DUCTBANK LATERAL PLAN AND PROFILE
564 - 565	CPS ENERGY DUCTBANK DETAILS
566 - 566B	CPS GAS GENERAL NOTES
567	CPS GAS DEPTH A TABLES
568	CPS GAS LOCATION DATA TABLES
569 - 595	CPS GAS RELOCATION PLAN
596 - 597	SHEETS OMITTED
	VII. BRIDGE
598	BRIDGE LAYOUT PANTHER SPRINGS CREEK BRIDGE STRUCTURE NO.3
599 - 600	BRIDGE TYPICALS PANTHER SPRINGS CREEK BRIDGE STRUCTURE NO. 3
601	ESTIMATED QUANTITIES
602	ABUTMENT NO.1-PHASE I
603	ABUTMENT NO.7-PHASE I
604	INTERIOR BENTS NO.2-6-PHASE I
605 - 607	25.00' C-I-P CONCRETE SLAB SPAN-PHASE I
608	ABUTMENT NO.1-PHASE II
609	ABUTMENT NO.7-PHASE II
610	INTERIOR BENTS NO.2-6-PHASE II
611 - 613	25.00' C-I-P CONCRETE SLAB SPAN-PHASE II
614 - 615	MISC. C-I-P SLAB SPAN DETAILS
616	BRIDGE LAYOUT PANTHER SPRINGS CREEK BRIDGE STRUCTURE NO.9
617 - 618	BRIDGE TYPICALS PANTHER SPRINGS CREEK BRIDGE STRUCTURE NO. 9
619	ESTIMATED QUANTITIES & BEARING SEAT ELEVATIONS
620 - 621	ABUTMENT NO.1-PHASE I
622 - 623	ABUTMENT NO.5-PHASE I
624	INTERIOR BENT NO.2-PHASE I
625	INTERIOR BENT NO.3-PHASE I
626	INTERIOR BENT NO.4-PHASE I
627	BEAM LAYOUT-PHASE I
628 - 629	246.00' PRESTR. CONC. BEAM UNIT-PHASE I
630 - 631	ABUTMENT NO.1-PHASE II
632 - 633	ABUTMENT NO.5-PHASE II
634	INTERIOR BENT NO.2-PHASE II
635	INTERIOR BENT NO.3-PHASE II
636	INTERIOR BENT NO.4-PHASE II
637	BEAM LAYOUT-PHASE II
638 - 639	246.00' PRESTR. CONC. BEAM UNIT-PHASE II
640	MISC. SLAB DETAILS

SHEET NO.	DESCRIPTION
VOLUME II	
	STATE STANDARDS
641 - 642	FD
643 - 644	IBD
645	IBND
646 - 647	IBEB
648	MEBR (C)
649	IBMS
650	IBTS
651 - 654	PCP
655 - 656	PMDF
657	AJ
658	BS-EJCP
659 - 660	TYPE C203
661	BAS-A
	VIII. TRAFFIC
662	TRAFFIC SIGNAL NOTES
663	EXISTING SIGNAL LAYOUT-BLANCO RD AT HUEBNER RD
664	PROPOSED SIGNAL LAYOUT-BLANCO RD AT HUEBNER RD
665 - 666	TRAFFIC SIGNAL ELEVATIONS
667	EXISTING SIGNAL LAYOUT-BLANCO RD AT WILDERNESS OAK
668	PROPOSED SIGNAL LAYOUT-BLANCO RD AT WILDERNESS OAK
669	TRAFFIC SIGNAL ELEVATIONS
670	INTERCONNECT LAYOUT-BLANCO RD-WILDERNESS OAK
	STATE STANDARDS
671 - 677	ED(1)-03 THRU ED(7)-03
678	RID(FND)-07
679	SMA-BD(1)-99 (MOD)
680	SMA-BD(2)-96
681	MA-C-96
682	MA-D-07
683	TS-FD-99 (MOD)
684	LUM-A-99
685	CFA-99
686 - 689	LMA(1)-01 THRU LMA(4)-01 (MOD)
	STATE STANDARDS (SAN ANTONIO DISTRICT)
690	LOOP DETECTOR CONTROLLER FOUNDATION AND TRENCH DETAILS
691	VEHICLE DETECTOR INSTALLATION DETAILS
692	MAST ARM POLE ELEVATION DETAILS
	CITY OF SAN ANTONIO STANDARDS
693	TRAFFIC SIGNAL DETAILS CONDUIT AND FOUNDATIONS
694 - 713	SIGNING LAYOUTS
	STATE STANDARDS
714	TSR(3)-03
715	TSR(4)-03
716	TSR(5)-03
717	BL(RS)-01
718	SOLAR POWERED ROADSIDE FLASHING BEACON ASSEMBLY DETAILS
719	SMD (CODES)-02
720	SMD(GEN)-02
721	SMD(SLIP-1)-02
722	SMD(SLIP-2)-02
723	SMD(SLIP-3)-02
724	W(3)-95
725	D & OM(1)-04 (SAN ANTONIO DISTRICT)
726	D & OM(2)-04 (SAN ANTONIO DISTRICT)
727 - 745	PAVEMENT MARKINGS LAYOUTS
	STATE STANDARDS
746	SAT-BL(PM-1)-97
747	PM(1)-03
748	PM(2)-00A
749	PM(3)-00A
750	PM(4)-03
751	PM(5)-01
752	PM(6)-01
753	BL(PM-2)-97 (SAN ANTONIO DISTRICT)
754	TYPICAL CROSSWALK DETAILS (SAN ANTONIO DISTRICT)
755 - 759	TWO WAY LEFT TURN LANE DETAILS (SAN ANTONIO DISTRICT)
	IX. ENVIRONMENTAL
760	EPIC SHEET
761	TCEQ GENERAL CONSTRUCTION NOTES
762	SW3P NARRATIVE
763 - 781	SW3P LAYOUT PHASE 1 STAGE 1
782 - 788	SW3P LAYOUT PHASE 1 STAGE 2
789 - 793	SW3P LAYOUT PHASE 2 STAGE 1
794	SW3P LAYOUT PHASE 2 STAGE 2
795	SW3P LAYOUT PHASE 2 STAGE 3
796 - 800	SW3P LAYOUT PHASE 2 STAGE 4
801	SW3P LAYOUT PHASE 2 STAGE 5
802 - 806	SW3P LAYOUT PHASE 3 STAGE 1
807 - 811	SW3P LAYOUT PHASE 3 STAGE 2
812 - 815	SW3P LAYOUT PHASE 4 STAGE 1
816 - 819	SW3P LAYOUT PHASE 4 STAGE 2
820 - 829	SW3P LAYOUT PHASE 4 STAGE 3
830 - 837	SW3P LAYOUT PHASE 4 STAGE 4
838 - 839	SHEETS OMITTED
	STATE STANDARDS
840	EC(1)-93
841	EC(2)-93
842	EC(3)-93

⚠1

THE FOLLOWING IS A LIST OF SHEETS MODIFIED UNDER AMENDMENT 1. THE LIST ALSO NOTES THE SHEET NUMBER CHANGES.
(ORIGINAL SHT NUMBER)->(NEW SHT NUMBER)

2->2-A1
14->14-A1
60->60-A1
66->66-A1
311->311-A1
322->322-A1
336->336-A1
337->337-A1
338->338-A1
339->339-A1
340->340-A1
341->341-A1
342->342-A1
345->345-A1
346->346-A1
347->347-A1
348->348-A1
487->488A
488->488B

⚠2

THE FOLLOWING IS A LIST OF SHEETS MODIFIED UNDER AMENDMENT 2. THE LIST ALSO NOTES THE SHEET NUMBER CHANGES.
(PREVIOUS SHT NUMBER)->(NEW SHT NUMBER)

2-A1->2-A2
15->15-A2
30->30-A2
49->49-A2
336-A1->336-A2
338-A1->338-A2
342-A1->342-A2
415->415-A2
424->424-A2
445->445-A2
446->446-A2
448->448-A2
449->449-A2
450->450-A2
451->451-A2

THE STANDARD SHEETS HAVE BEEN SELECTED BY ME OR UNDER MY RESPONSIBLE SUPERVISION AS BEING APPLICABLE TO THIS PROJECT.

STATE OF TEXAS
REGINALD FOUNTAIN
97328
LICENSED
PROFESSIONAL ENGINEER

2/10/10
DATE

Reginald Fountain, P.E.
REGINALD FOUNTAIN

NO.	REVISION	BY	DATE
⚠1	AMDT 1 MODIFIED SHEET NUMBERS	DRW	02-08
⚠2	AMDT 2 MODIFIED SHEET NUMBERS	DRW	03-08

CP&Y Chiang, Patel & Yerby, Inc.

BEXAR COUNTY
PUBLIC WORKS DIVISION

F.M. 2696 (BLANCO ROAD)

INDEX OF SHEETS

Designed: RTF	STATE	BEXAR COUNTY FILE NUMBER	PLAN SET NO.
Checked: JMC	TEXAS		---
Drawn: RG	COUNTY		OF
Checked: JMC	BEXAR	2708-01-022, ETC.	842

pw:/Active Projects/BEX6102/ Drawings/8.10 Cut Sheets/8.1.06 General/6102CSR0G002.dgn

INDEX OF SHEETS

SHEET NO.	DESCRIPTION
VOLUME I	I. GENERAL
1	TITLE SHEET
2	△1 △2 INDEX OF SHEETS
3 - 8	PROJECT LAYOUT
9 - 14	△1 TYPICAL SECTIONS
15 - 17	△2 GRADING SUMMARY
18 - 26	EARTHWORK SUMMARY
27	DRIVEWAY SUMMARY
28	RETAINING WALL SUMMARY
29	CULVERT QUANTITY SUMMARY
30 - 31	△2 STORM SEWER SUMMARY
32 - 33	BEXARMET WATER MAIN REPLACEMENT SUMMARY
34	DUCTBANK SUMMARY
35	CPS GAS SUMMARY
36 - 46	TRAFFIC CONTROL PLAN SUMMARY
47	CRASH CUSHION ATTENUATOR SUMMARY
48	TRAFFIC SIGNALIZATION SUMMARY
49	△2 TEMPORARY TRAFFIC SIGNALIZATION SUMMARY
50	SIGNING SUMMARY
51	PAVEMENT MARKINGS SUMMARY
52 - 54	SUMMARY OF SMALL SIGNS
55 - 59	SW3P SUMMARY
	II. TRAFFIC CONTROL PLAN
60 - 62	△1 TRAFFIC CONTROL PLAN NARRATIVE
63	TRAFFIC CONTROL AND SCHEDULE OF ADVANCED WARNING SIGNS
64 - 65	TRAFFIC CONTROL PLAN HORIZONTAL ALIGNMENT DATA SHEETS
66 - 73	△1 TRAFFIC CONTROL PLAN TYPICAL SECTIONS
74 - 80	TRAFFIC CONTROL PLAN DETOURS
81 - 86	TRAFFIC CONTROL PLAN HUEBNER DETOURS
87 - 88	TRAFFIC CONTROL PLAN TEMPORARY SHORING
89 - 94	TRAFFIC CONTROL PLAN ADVANCE WARNING SIGNS & REGULATORY SIGNS
95 - 101	TRAFFIC CONTROL PLAN PHASE 1 STAGE 2
102 - 106	TRAFFIC CONTROL PLAN PHASE 2 STAGE 1
107	TRAFFIC CONTROL PLAN PHASE 2 STAGE 2
108	TRAFFIC CONTROL PLAN PHASE 2 STAGE 3 STEP 1
109	TRAFFIC CONTROL PLAN PHASE 2 STAGE 3 STEP 2
110 - 114	TRAFFIC CONTROL PLAN PHASE 2 STAGE 4
115	TRAFFIC CONTROL PLAN PHASE 2 STAGE 5 STEP 1
116	TRAFFIC CONTROL PLAN PHASE 2 STAGE 5 STEP 2
117 - 120	TRAFFIC CONTROL PLAN PHASE 2 STAGE 6
121 - 126	TRAFFIC CONTROL PLAN PHASE 3 STAGE 1
127 - 132	TRAFFIC CONTROL PLAN PHASE 3 STAGE 2
133 - 137	TRAFFIC CONTROL PLAN PHASE 3 STAGE 3
138 - 143	TRAFFIC CONTROL PLAN PHASE 4 STAGE 1
144 - 149	TRAFFIC CONTROL PLAN PHASE 4 STAGE 2
150 - 154	TRAFFIC CONTROL PLAN PHASE 4 STAGE 3
155 - 163	TRAFFIC CONTROL PLAN PHASE 4 STAGE 4
164 - 172	TRAFFIC CONTROL PLAN PHASE 4 STAGE 5
173 - 181	TRAFFIC CONTROL PLAN PHASE 4 STAGE 6
182	TEMPORARY SIGNAL LAYOUT PH 2-STAGES 1&2
183	TEMPORARY SIGNAL LAYOUT PH 2-STAGE 3-STEP 1
184	TEMPORARY SIGNAL LAYOUT PH 2-STAGE 3-STEP 2
185	TEMPORARY SIGNAL LAYOUT PH 2-STAGE 4
186	TEMPORARY SIGNAL LAYOUT PH 2-STAGE 5-STEP 1
187	TEMPORARY SIGNAL LAYOUT PH 2-STAGE 5-STEP 2
188	TEMPORARY SIGNAL LAYOUT PH 3-STAGE 1
189	TEMPORARY SIGNAL LAYOUT PH 3-STAGE 2
189A	VIA (SFPM)
	STATE STANDARDS
190 - 201	BC(1 THRU 12)-07
202	WZ(BTS-1)-03
203	WZ(BTS-2)-03
204	WZ(TD)-03
206	WZ(STPM)-03
206	WZ(UL)-03
207	WZ(BRK)-03
208 - 211	TCP(1-1)-98 THRU TCP(1-4)-98
212	TCP(2-1)-98
213	TCP(2-2)-03
214	TCP(2-3)-03
215	TCP(2-4)-03
216	TCP(2-5)-03
217	TCP(2-7)-03
218	TCP(3-1)-98
219	TCP(3-3)-98
220	TCP(7-1)-98
221	EDGE CONDITION TREATMENT TYPES
222	SSCB(1)-99
223	SSCB(2)-00A
224 - 226	CSB(1)-04 THRU CSB(3)-04
227	QUAD (N)-99
228	TRACC(N)-05
228A	ABSORB-05
228B	LPCB(1)-92
228C	LPCB(2)-92
	III. ROADWAY
229 - 231	HORIZONTAL ALIGNMENT DATA SHEET
232 - 272	PLAN & PROFILE
273 - 286	CROSS STREET PLAN & PROFILE
287 - 300	INTERSECTION LAYOUTS
301 - 305	DRIVEWAY PROFILES
306 - 311	△1 MISCELLANEOUS ROADWAY DETAILS
	STATE STANDARDS
312	BED-03
313	CCCG-01
314	CRR
315 - 317	MB-06(1)
318	MBGF-03A
319	MBGF(TR)-05
320	PR1
321 - 324	△1 PED-05 (MOD)
325 - 327	PRD-06 (MOD)
328	SGT(7)-03A
329	SGT(8)-03A

SHEET NO.	DESCRIPTION
VOLUME I	IV. RETAINING WALLS
330 - 334	RETAINING WALL KEY MAP
335 - 348	△1 △2 RETAINING WALL PLAN & PROFILE
349 - 351	RETAINING WALL MISCELLANEOUS DETAILS
	STATE STANDARDS
351A	MS-03
352	RW(MSE)
353	RW(CB)
354	RW(TRF)
355	RW 1(H)A
356	RW 1(H)B
357	RW 1(H)C
358	RW 2
	V. DRAINAGE
359	EXTERIOR DRAINAGE AREA MAP
360 - 369	INTERIOR DRAINAGE AREA MAP
370 - 373	DRAINAGE AREA CALCULATIONS
374 - 383	HYDRAULIC CALCULATIONS
384 - 388	HYDRAULIC DATA SHEET BRIDGE CLASS STRUCTURES
389 - 400	HYDRAULIC DATA SHEET NON-BRIDGE CLASS STRUCTURES
401 - 408	CULVERT LAYOUTS
409 - 449	△2 STORM DRAIN PLAN AND PROFILE
450 - 452	STORM DRAIN PROFILES
452A - 452C	MISCELLANEOUS DRAINAGE DETAILS
453	TYPE A CURB INLET DETAILS
454	TYPE B CURB INLET DETAILS
455	BRIDGE CLASS CULVERT DETAILS
456 - 462	RIPRAP LAYOUTS
	STATE STANDARDS
463	SCP-3
464	SCP-4
465	SCP-5
466	SCP-6
466A	SCP-MD
467	MC-MD
468	MC-8-13
469	ECD
470	BCS
471	PW
472	CH-FW-0
473	CH-FW-45
474	CH-PW-0
475 - 476	SETB-CD (MOD)
477	FW-0
478	SW-0
479	SHEET OMITTED
480	IL-C
481 - 482	IL-H-G
483	MH-M
	STATE STANDARDS (SAN ANTONIO DISTRICT)
485 - 484	CURB INLET TYPE C W/ EXTENSION
486	TRAFFIC INLET TYPE W-1 THRU W-5
487	TYPE 6 TRAFFIC GRATE
488	RIPRAP HEADWALL
VOLUME II	VI. UTILITIES
488A - 505	△1 EXISTING UTILITY LAYOUTS
508 - 509	BEXARMET WATER MAIN REPLACEMENT TITLE SHEET
510 - 524	BEXARMET WATER MAIN REPLACEMENT LAYOUTS
525 - 536	SHEETS OMITTED
537 - 539	BEXARMET WATER MAIN REPLACEMENT PROFILES
540 - 553	BEXARMET WATER MAIN REPLACEMENT DETAILS
552A	CPS ENERGY DUCTBANK HORIZONTAL ALIGNMENT DATA
553 - 561	CPS ENERGY DUCTBANK PLAN AND PROFILE
562 - 563	CPS ENERGY DUCTBANK LATERAL PLAN AND PROFILE
564 - 565	CPS ENERGY DUCTBANK DETAILS
566 - 566B	CPS GAS GENERAL NOTES
567	CPS GAS DEPTH A TABLES
568	CPS GAS LOCATION DATA TABLES
569 - 595	CPS GAS RELOCATION PLAN
596 - 597	SHEETS OMITTED
	VII. BRIDGE
598	BRIDGE LAYOUT PANTHER SPRINGS CREEK BRIDGE STRUCTURE NO.3
599 - 600	BRIDGE TYPICALS PANTHER SPRINGS CREEK BRIDGE STRUCTURE NO. 3
601	ESTIMATED QUANTITIES
602	ABUTMENT NO.1-PHASE I
603	ABUTMENT NO.7-PHASE I
604	INTERIOR BENTS NO.2-6-PHASE I
605 - 607	25.00' C-I-P CONCRETE SLAB SPAN-PHASE I
608	ABUTMENT NO.1-PHASE II
609	ABUTMENT NO.7-PHASE II
610	INTERIOR BENTS NO.2-6-PHASE II
611 - 613	25.00' C-I-P CONCRETE SLAB SPAN-PHASE II
614 - 615	MISC. C-I-P SLAB SPAN DETAILS
616	BRIDGE LAYOUT PANTHER SPRINGS CREEK BRIDGE STRUCTURE NO.9
617 - 618	BRIDGE TYPICALS PANTHER SPRINGS CREEK BRIDGE STRUCTURE NO. 9
619	ESTIMATED QUANTITIES & BEARING SEAT ELEVATIONS
620 - 621	ABUTMENT NO.1-PHASE I
622 - 623	ABUTMENT NO.5-PHASE I
624	INTERIOR BENT NO.2-PHASE I
625	INTERIOR BENT NO.3-PHASE I
626	INTERIOR BENT NO.4-PHASE I
627	BEAM LAYOUT-PHASE I
628 - 629	246.00' PRESTR. CONC. BEAM UNIT-PHASE I
630 - 631	ABUTMENT NO.1-PHASE II
632 - 633	ABUTMENT NO.5-PHASE II
634	INTERIOR BENT NO.2-PHASE II
635	INTERIOR BENT NO.3-PHASE II
636	INTERIOR BENT NO.4-PHASE II
637	BEAM LAYOUT-PHASE II
638 - 639	246.00' PRESTR. CONC. BEAM UNIT-PHASE II
640	MISC. SLAB DETAILS

SHEET NO.	DESCRIPTION
VOLUME II	
	STATE STANDARDS
641 - 642	FD
643 - 644	IBD
645	IBND
646 - 647	IBEB
648	MEBR (C)
649	IBMS
650	IBTS
651 - 654	PCP
655 - 656	PMDF
657	AJ
658	BS-EJCP
659 - 660	TYPE C203
661	BAS-A
	VIII. TRAFFIC
662	TRAFFIC SIGNAL NOTES
663	EXISTING SIGNAL LAYOUT-BLANCO RD AT HUEBNER RD
664	PROPOSED SIGNAL LAYOUT-BLANCO RD AT HUEBNER RD
665 - 666	TRAFFIC SIGNAL ELEVATIONS
667	EXISTING SIGNAL LAYOUT-BLANCO RD AT WILDERNESS OAK
668	PROPOSED SIGNAL LAYOUT-BLANCO RD AT WILDERNESS OAK
669	TRAFFIC SIGNAL ELEVATIONS
670	INTERCONNECT LAYOUT-BLANCO RD-WILDERNESS OAK
	STATE STANDARDS
671 - 677	ED(1)-03 THRU ED(7)-03
678	RID(FND)-07
679	SMA-BO(1)-99 (MOD)
680	SMA-BO(2)-96
681	MA-C-96
682	MA-D-07
683	TS-FD-99 (MOD)
684	LUM-A-99
685	CFA-99
686 - 689	LMA(1)-01 THRU LMA(4)-01 (MOD)
	STATE STANDARDS (SAN ANTONIO DISTRICT)
690	LOOP DETECTOR CONTROLLER FOUNDATION AND TRENCH DETAILS
691	VEHICLE DETECTOR INSTALLATION DETAILS
692	MAST ARM POLE ELEVATION DETAILS
	CITY OF SAN ANTONIO STANDARDS
693	TRAFFIC SIGNAL DETAILS CONDUIT AND FOUNDATIONS
694 - 713	SIGNING LAYOUTS
	STATE STANDARDS
714	TSR(3)-03
715	TSR(4)-03
716	TSR(5)-03
717	BL(RS)-01
718	SOLAR POWERED ROADSIDE FLASHING BEACON ASSEMBLY DETAILS
719	SMD (CODES)-02
720	SMD(GEN)-02
721	SMD(SLIP-1)-02
722	SMD(SLIP-2)-02
723	SMD(SLIP-3)-02
724	W(3)-95
725	D & OM(1)-04 (SAN ANTONIO DISTRICT)
726	D & OM(2)-04 (SAN ANTONIO DISTRICT)
727 - 745	PAVEMENT MARKINGS LAYOUTS
	STATE STANDARDS
746	SAT-BL(PM-1)-97
747	PM(1)-03
748	PM(2)-00A
749	PM(3)-00A
750	PM(4)-03
751	PM(5)-01
752	PM(6)-01
753	BL(PM-2)-97 (SAN ANTONIO DISTRICT)
754	TYPICAL CROSSWALK DETAILS (SAN ANTONIO DISTRICT)
755 - 759	TWO WAY LEFT TURN LANE DETAILS (SAN ANTONIO DISTRICT)
	IX. ENVIRONMENTAL
760	EPIC SHEET
761	TCEQ GENERAL CONSTRUCTION NOTES
762	SW3P NARRATIVE
763 - 781	SW3P LAYOUT PHASE 1 STAGE 1
782 - 788	SW3P LAYOUT PHASE 1 STAGE 2
789 - 793	SW3P LAYOUT PHASE 2 STAGE 1
794	SW3P LAYOUT PHASE 2 STAGE 2
795	SW3P LAYOUT PHASE 2 STAGE 3
796 - 800	SW3P LAYOUT PHASE 2 STAGE 4
801	SW3P LAYOUT PHASE 2 STAGE 5
802 - 806	SW3P LAYOUT PHASE 3 STAGE 1
807 - 811	SW3P LAYOUT PHASE 3 STAGE 2
812 - 815	SW3P LAYOUT PHASE 4 STAGE 1
816 - 819	SW3P LAYOUT PHASE 4 STAGE 2
820 - 829	SW3P LAYOUT PHASE 4 STAGE 3
830 - 837	SW3P LAYOUT PHASE 4 STAGE 4
838 - 839	SHEETS OMITTED
	STATE STANDARDS
840	EC(1)-93
841	EC(2)-93
842	EC(3)-93

△1

THE FOLLOWING IS A LIST OF SHEETS MODIFIED UNDER AMENDMENT 1. THE LIST ALSO NOTES THE SHEET NUMBER CHANGES.
(ORIGINAL SHT NUMBER)->(NEW SHT NUMBER)

2->2-A1
14->14-A1
60->60-A1
66->66-A1
311->311-A1
322->322-A1
336->336-A1
337->337-A1
338->338-A1
339->339-A1
340->340-A1
341->341-A1
342->342-A1
345->345-A1
346->346-A1
347->347-A1
348->348-A1
487->488A
488->488B

△2

THE FOLLOWING IS A LIST OF SHEETS MODIFIED UNDER AMENDMENT 2. THE LIST ALSO NOTES THE SHEET NUMBER CHANGES.
(PREVIOUS SHT NUMBER)->(NEW SHT NUMBER)

2-A1->2-A2
15->15-A2
30->30-A2
49->49-A2
336-A1->336-A2
338-A1->338-A2
342-A1->342-A2
415->415-A2
424->424-A2
445->445-A2
446->446-A2
448->448-A2
449->449-A2
450->450-A2
451->451-A2

THE STANDARD SHEETS HAVE BEEN SELECTED BY ME OR UNDER MY RESPONSIBLE SUPERVISION AS BEING APPLICABLE TO THIS PROJECT.

STATE OF TEXAS
DAVID R. WEGMANN
95949
LICENSED PROFESSIONAL ENGINEER

03/07/08
DATE

DAVID R. WEGMANN

NO.	REVISION	BY	DATE
△1	AMDT 1 MODIFIED SHEET NUMBERS	DRW	02-08
△2	AMDT 2 MODIFIED SHEET NUMBERS	DRW	03-08

CP&Y Chiang, Patel & Yerby, Inc.

BEXAR COUNTY
PUBLIC WORKS DIVISION

F.M. 2696 (BLANCO ROAD)

INDEX OF SHEETS

Designed: RTF	STATE	BEXAR COUNTY FILE NUMBER	PLAN SET NO.
Checked: JMC	TEXAS		---
Drawn: RG	COUNTY		OF
Checked: JMC	BEXAR	2708-01-022, ETC.	842

pw:/Active Projects/BEX5102/8.00 Plans and Drawings/8.10 Cut Sheets/8.1.06 General/6102CSR00D02.dgn
3/7/2008 3:51:11 PM

INDEX OF SHEETS

SHEET NO.	DESCRIPTION
VOLUME I	I. GENERAL
1	TITLE SHEET
2	⚠INDEX OF SHEETS
3 - 8	PROJECT LAYOUT
9 - 14	⚠TYPICAL SECTIONS
15 - 17	GRADING SUMMARY
18 - 26	EARTHWORK SUMMARY
27	DRIVEWAY SUMMARY
28	RETAINING WALL SUMMARY
29	CULVERT QUANTITY SUMMARY
30 - 31	STORM SEWER SUMMARY
32 - 33	BEXARMET WATER MAIN REPLACEMENT SUMMARY
34	DUCTBANK SUMMARY
35	CPS GAS SUMMARY
36 - 46	TRAFFIC CONTROL PLAN SUMMARY
47	CRASH CUSHION ATTENUATOR SUMMARY
48	TRAFFIC SIGNALIZATION SUMMARY
49	TEMPORARY TRAFFIC SIGNALIZATION SUMMARY
50	SIGNING SUMMARY
51	PAVEMENT MARKINGS SUMMARY
52 - 54	SUMMARY OF SMALL SIGNS
55 - 59	SW3P SUMMARY
	II. TRAFFIC CONTROL PLAN
60 - 62	⚠TRAFFIC CONTROL PLAN NARRATIVE
63	TRAFFIC CONTROL AND SCHEDULE OF ADVANCED WARNING SIGNS
64 - 65	TRAFFIC CONTROL PLAN HORIZONTAL ALIGNMENT DATA SHEETS
66 - 73	⚠TRAFFIC CONTROL PLAN TYPICAL SECTIONS
74 - 80	TRAFFIC CONTROL PLAN DETOURS
81 - 86	TRAFFIC CONTROL PLAN HUEBNER DETOURS
87 - 88	TRAFFIC CONTROL PLAN TEMPORARY SHORING
89 - 94	TRAFFIC CONTROL PLAN ADVANCE WARNING SIGNS & REGULATORY SIGNS
95 - 101	TRAFFIC CONTROL PLAN PHASE 1 STAGE 2
102 - 106	TRAFFIC CONTROL PLAN PHASE 2 STAGE 1
107	TRAFFIC CONTROL PLAN PHASE 2 STAGE 2
108	TRAFFIC CONTROL PLAN PHASE 2 STAGE 3 STEP 1
109	TRAFFIC CONTROL PLAN PHASE 2 STAGE 3 STEP 2
110 - 114	TRAFFIC CONTROL PLAN PHASE 2 STAGE 4
115	TRAFFIC CONTROL PLAN PHASE 2 STAGE 5 STEP 1
116	TRAFFIC CONTROL PLAN PHASE 2 STAGE 5 STEP 2
117 - 120	TRAFFIC CONTROL PLAN PHASE 2 STAGE 6
121 - 126	TRAFFIC CONTROL PLAN PHASE 3 STAGE 1
127 - 132	TRAFFIC CONTROL PLAN PHASE 3 STAGE 2
133 - 137	TRAFFIC CONTROL PLAN PHASE 3 STAGE 3
138 - 143	TRAFFIC CONTROL PLAN PHASE 4 STAGE 1
144 - 149	TRAFFIC CONTROL PLAN PHASE 4 STAGE 2
150 - 154	TRAFFIC CONTROL PLAN PHASE 4 STAGE 3
155 - 163	TRAFFIC CONTROL PLAN PHASE 4 STAGE 4
164 - 172	TRAFFIC CONTROL PLAN PHASE 4 STAGE 5
173 - 181	TRAFFIC CONTROL PLAN PHASE 4 STAGE 6
182	TEMPORARY SIGNAL LAYOUT PH 2-STAGES 1&2
183	TEMPORARY SIGNAL LAYOUT PH 2-STAGE 3-STEP 1
184	TEMPORARY SIGNAL LAYOUT PH 2-STAGE 3-STEP 2
185	TEMPORARY SIGNAL LAYOUT PH 2-STAGE 4
186	TEMPORARY SIGNAL LAYOUT PH 2-STAGE 5-STEP 1
187	TEMPORARY SIGNAL LAYOUT PH 2-STAGE 5-STEP 2
188	TEMPORARY SIGNAL LAYOUT PH 3-STAGE 1
189	TEMPORARY SIGNAL LAYOUT PH 3-STAGE 2
189A	VIA (SFPM)
	STATE STANDARDS
190 - 201	BC(1 THRU 12)-07
202	WZ(BTS-1)-03
203	WZ(BTS-2)-03
204	WZ(TD)-03
206	WZ(STPM)-03
206	WZ(UL)-03
207	WZ(BRK)-03
208 - 211	TCP(1-1)-98 THRU TCP(1-4)-98
212	TCP(2-1)-98
213	TCP(2-2)-03
214	TCP(2-3)-03
215	TCP(2-4)-03
216	TCP(2-5)-03
217	TCP(2-7)-03
218	TCP(3-1)-98
219	TCP(3-3)-98
220	TCP(7-1)-98
221	EDGE CONDITION TREATMENT TYPES
222	SSCB(1)-99
223	SSCB(2)-00A
224 - 226	CSB(1)-04 THRU CSB(3)-04
227	QUAD (N)-99
228	TRACC(N)-05
228A	ABSORB-05
228B	LPCB(1)-92
228C	LPCB(2)-92
	III. ROADWAY
229 - 231	HORIZONTAL ALIGNMENT DATA SHEET
232 - 272	PLAN & PROFILE
273 - 286	CROSS STREET PLAN & PROFILE
287 - 300	INTERSECTION LAYOUTS
301 - 305	DRIVEWAY PROFILES
306 - 311	⚠MISCELLANEOUS ROADWAY DETAILS
	STATE STANDARDS
312	BED-03
313	CCCG-01
314	CRR
315 - 317	MB-06(1)
318	MBGF-03A
319	MBGF(TR)-05
320	PR1
321 - 324	⚠PED-05 (MOD)
325 - 327	PRD-06 (MOD)
328	SGT(7)-03A
329	SGT(8)-03A

SHEET NO.	DESCRIPTION
VOLUME I	IV. RETAINING WALLS
330 - 334	RETAINING WALL KEY MAP
335 - 348	⚠RETAINING WALL PLAN & PROFILE
349 - 351	RETAINING WALL MISCELLANEOUS DETAILS
	STATE STANDARDS
351A	MS-03
352	RW(MSE)
353	RW(CB)
354	RW(TRF)
355	RW 1(H)A
356	RW 1(H)B
357	RW 1(H)C
358	RW 2
	V. DRAINAGE
359	EXTERIOR DRAINAGE AREA MAP
360 - 369	INTERIOR DRAINAGE AREA MAP
370 - 373	DRAINAGE AREA CALCULATIONS
374 - 383	HYDRAULIC CALCULATIONS
384 - 388	HYDRAULIC DATA SHEET BRIDGE CLASS STRUCTURES
389 - 400	HYDRAULIC DATA SHEET NON-BRIDGE CLASS STRUCTURES
401 - 408	CULVERT LAYOUTS
409 - 449	STORM DRAIN PLAN AND PROFILE
450 - 452	STORM DRAIN PROFILES
452A - 452C	MISCELLANEOUS DRAINAGE DETAILS
453	TYPE A CURB INLET DETAILS
454	TYPE B CURB INLET DETAILS
455	BRIDGE CLASS CULVERT DETAILS
456 - 462	RIPRAP LAYOUTS
	STATE STANDARDS
463	SCP-3
464	SCP-4
465	SCP-5
466	SCP-6
466A	SCP-MD
467	MC-MD
468	MC-8-13
469	ECD
470	BCS
471	PW
472	CH-FW-0
473	CH-FW-45
474	CH-PW-0
475 - 476	SETB-CD (MOD)
477	FW-0
478	SW-0
479	SHEET OMITTED
480	IL-C
481 - 482	IL-H-G
483	MH-M
	STATE STANDARDS (SAN ANTONIO DISTRICT)
485 - 484	CURB INLET TYPE C W/ EXTENSION
486	TRAFFIC INLET TYPE W-1 THRU W-5
487	TYPE 6 TRAFFIC GRATE
488	RIPRAP HEADWALL
VOLUME II	VI. UTILITIES
488A - 505	⚠EXISTING UTILITY LAYOUTS
508 - 509	BEXARMET WATER MAIN REPLACEMENT TITLE SHEET
510 - 524	BEXARMET WATER MAIN REPLACEMENT LAYOUTS
525 - 536	SHEETS OMITTED
537 - 539	BEXARMET WATER MAIN REPLACEMENT PROFILES
540 - 553	BEXARMET WATER MAIN REPLACEMENT DETAILS
552A	CPS ENERGY DUCTBANK HORIZONTAL ALIGNMENT DATA
553 - 561	CPS ENERGY DUCTBANK PLAN AND PROFILE
562 - 563	CPS ENERGY DUCTBANK LATERAL PLAN AND PROFILE
564 - 565	CPS ENERGY DUCTBANK DETAILS
566 - 566B	CPS GAS GENERAL NOTES
567	CPS GAS DEPTH A TABLES
568	CPS GAS LOCATION DATA TABLES
569 - 595	CPS GAS RELOCATION PLAN
596 - 597	SHEETS OMITTED
	VII. BRIDGE
598	BRIDGE LAYOUT PANTHER SPRINGS CREEK BRIDGE STRUCTURE NO.3
599 - 600	BRIDGE TYPICALS PANTHER SPRINGS CREEK BRIDGE STRUCTURE NO. 3
601	ESTIMATED QUANTITIES
602	ABUTMENT NO.1-PHASE I
603	ABUTMENT NO.7-PHASE I
604	INTERIOR BENTS NO.2-6-PHASE I
605 - 607	25.00' C-I-P CONCRETE SLAB SPAN-PHASE I
608	ABUTMENT NO.1-PHASE II
609	ABUTMENT NO.7-PHASE II
610	INTERIOR BENTS NO.2-6-PHASE II
611 - 613	25.00' C-I-P CONCRETE SLAB SPAN-PHASE II
614 - 615	MISC. C-I-P SLAB SPAN DETAILS
616	BRIDGE LAYOUT PANTHER SPRINGS CREEK BRIDGE STRUCTURE NO.9
617 - 618	BRIDGE TYPICALS PANTHER SPRINGS CREEK BRIDGE STRUCTURE NO. 9
619	ESTIMATED QUANTITIES & BEARING SEAT ELEVATIONS
620 - 621	ABUTMENT NO.1-PHASE I
622 - 623	ABUTMENT NO.5-PHASE I
624	INTERIOR BENT NO.2-PHASE I
625	INTERIOR BENT NO.3-PHASE I
626	INTERIOR BENT NO.4-PHASE I
627	BEAM LAYOUT-PHASE I
628 - 629	246.00' PRESTR. CONC. BEAM UNIT-PHASE I
630 - 631	ABUTMENT NO.1-PHASE II
632 - 633	ABUTMENT NO.5-PHASE II
634	INTERIOR BENT NO.2-PHASE II
635	INTERIOR BENT NO.3-PHASE II
636	INTERIOR BENT NO.4-PHASE II
637	BEAM LAYOUT-PHASE II
638 - 639	246.00' PRESTR. CONC. BEAM UNIT-PHASE II
640	MISC. SLAB DETAILS

SHEET NO.	DESCRIPTION
VOLUME II	
	STATE STANDARDS
641 - 642	FD
643 - 644	IBD
645	IBND
646 - 647	IBEB
648	MEBR (C)
649	IBMS
650	IBTS
651 - 654	PCP
655 - 656	PMDF
657	AJ
658	BS-EJCP
659 - 660	TYPE C203
661	BAS-A
	VIII. TRAFFIC
662	TRAFFIC SIGNAL NOTES
663	EXISTING SIGNAL LAYOUT-BLANCO RD AT HUEBNER RD
664	PROPOSED SIGNAL LAYOUT-BLANCO RD AT HUEBNER RD
665 - 666	TRAFFIC SIGNAL ELEVATIONS
667	EXISTING SIGNAL LAYOUT-BLANCO RD AT WILDERNESS OAK
668	PROPOSED SIGNAL LAYOUT-BLANCO RD AT WILDERNESS OAK
669	TRAFFIC SIGNAL ELEVATIONS
670	INTERCONNECT LAYOUT-BLANCO RD-WILDERNESS OAK
	STATE STANDARDS
671 - 677	ED(1)-03 THRU ED(7)-03
678	RID(FND)-07
679	SMA-80(1)-99 (MOD)
680	SMA-80(2)-96
681	MA-C-96
682	MA-D-07
683	TS-FD-99 (MOD)
684	LUM-A-99
685	CFA-99
686 - 689	LMA(1)-01 THRU LMA(4)-01 (MOD)
	STATE STANDARDS (SAN ANTONIO DISTRICT)
690	LOOP DETECTOR CONTROLLER FOUNDATION AND TRENCH DETAILS
691	VEHICLE DETECTOR INSTALLATION DETAILS
692	MAST ARM POLE ELEVATION DETAILS
	CITY OF SAN ANTONIO STANDARDS
693	TRAFFIC SIGNAL DETAILS CONDUIT AND FOUNDATIONS
694 - 713	SIGNING LAYOUTS
	STATE STANDARDS
714	TSR(3)-03
715	TSR(4)-03
716	TSR(5)-03
717	BL(RS)-01
718	SOLAR POWERED ROADSIDE FLASHING BEACON ASSEMBLY DETAILS
719	SMD (CODES)-02
720	SMD(GEN)-02
721	SMD(SLIP-1)-02
722	SMD(SLIP-2)-02
723	SMD(SLIP-3)-02
724	W(3)-95
725	D & OM(1)-04 (SAN ANTONIO DISTRICT)
726	D & OM(2)-04 (SAN ANTONIO DISTRICT)
727 - 745	PAVEMENT MARKINGS LAYOUTS
	STATE STANDARDS
746	SAT-BL(PM-1)-97
747	PM(1)-03
748	PM(2)-00A
749	PM(3)-00A
750	PM(4)-03
751	PM(5)-01
752	PM(6)-01
753	BL(PM-2)-97 (SAN ANTONIO DISTRICT)
754	TYPICAL CROSSWALK DETAILS (SAN ANTONIO DISTRICT)
755 - 759	TWO WAY LEFT TURN LANE DETAILS (SAN ANTONIO DISTRICT)
	IX. ENVIRONMENTAL
760	EPIC SHEET
761	TCEQ GENERAL CONSTRUCTION NOTES
762	SW3P NARRATIVE
763 - 781	SW3P LAYOUT PHASE 1 STAGE 1
782 - 788	SW3P LAYOUT PHASE 1 STAGE 2
789 - 793	SW3P LAYOUT PHASE 2 STAGE 1
794	SW3P LAYOUT PHASE 2 STAGE 2
795	SW3P LAYOUT PHASE 2 STAGE 3
796 - 800	SW3P LAYOUT PHASE 2 STAGE 4
801	SW3P LAYOUT PHASE 2 STAGE 5
802 - 806	SW3P LAYOUT PHASE 3 STAGE 1
807 - 811	SW3P LAYOUT PHASE 3 STAGE 2
812 - 815	SW3P LAYOUT PHASE 4 STAGE 1
816 - 819	SW3P LAYOUT PHASE 4 STAGE 2
820 - 829	SW3P LAYOUT PHASE 4 STAGE 3
830 - 837	SW3P LAYOUT PHASE 4 STAGE 4
838 - 839	SHEETS OMITTED
	STATE STANDARDS
840	EC(1)-93
841	EC(2)-93
842	EC(3)-93

⚠ THE FOLLOWING IS A LIST OF SHEETS MODIFIED UNDER AMENDMENT 1. THE LIST ALSO NOTES THE SHEET NUMBER CHANGES.
(ORIGINAL SHT NUMBER)->(NEW SHT NUMBER)

2->2-A1
14->14-A1
60->60-A1
66->66-A1
311->311-A1
322->322-A1
336->336-A1
337->337-A1
338->338-A1
339->339-A1
340->340-A1
341->341-A1
342->342-A1
345->345-A1
346->346-A1
347->347-A1
348->348-A1
487->488A
488->488B

THE STANDARD SHEETS HAVE BEEN SELECTED BY ME OR UNDER MY RESPONSIBLE SUPERVISION AS BEING APPLICABLE TO THIS PROJECT.

STATE OF TEXAS
DAVID R. WEGMANN
95949
LICENSED
PROFESSIONAL ENGINEER

02/28/2008
DATE

P.E.
DAVID R. WEGMANN

NO.	REVISION	BY	DATE
⚠	AMDT 1 MODIFIED SHEET NUMBERS	DRW	02-08

CP&Y Chiang, Patel & Yerby, Inc.

BEXAR COUNTY
PUBLIC WORKS DIVISION

F.M. 2696 (BLANCO ROAD)

INDEX OF SHEETS

Designed: RTF	STATE	BEXAR COUNTY FILE NUMBER	PLAN SET NO.
Checked: JMC	TEXAS		---
Drawn: RG	COUNTY		OF
Checked: JMC	BEXAR	270B-01-022, ETC.	842

pw:/Active Projects/BEX6102/8.00 Plans and Drawings/8.10 Cut Sheets/8.1.06 General/6102CSRGD002.dgn
2/28/2008 12:39:44 PM

INDEX OF SHEETS

SHEET NO.	DESCRIPTION
VOLUME I	I. GENERAL
1	TITLE SHEET
2	INDEX OF SHEETS
3 - 8	PROJECT LAYOUT
9 - 14	TYPICAL SECTIONS
15 - 17	GRADING SUMMARY
18 - 26	EARTHWORK SUMMARY
27	DRIVEWAY SUMMARY
28	RETAINING WALL SUMMARY
29	CULVERT QUANTITY SUMMARY
30 - 31	STORM SEWER SUMMARY
32 - 33	BEXARMET WATER MAIN REPLACEMENT SUMMARY
34	DUCTBANK SUMMARY
35	CPS GAS SUMMARY
36 - 46	TRAFFIC CONTROL PLAN SUMMARY
47	CRASH CUSHION ATTENUATOR SUMMARY
48	TRAFFIC SIGNALIZATION SUMMARY
49	TEMPORARY TRAFFIC SIGNALIZATION SUMMARY
50	SIGNING SUMMARY
51	PAVEMENT MARKINGS SUMMARY
52 - 54	SUMMARY OF SMALL SIGNS
55 - 59	SW3P SUMMARY
	II. TRAFFIC CONTROL PLAN
60 - 62	TRAFFIC CONTROL PLAN NARRATIVE
63	TRAFFIC CONTROL AND SCHEDULE OF ADVANCED WARNING SIGNS
64 - 65	TRAFFIC CONTROL PLAN HORIZONTAL ALIGNMENT DATA SHEETS
66 - 73	TRAFFIC CONTROL PLAN TYPICAL SECTIONS
74 - 80	TRAFFIC CONTROL PLAN DETOURS
81 - 86	TRAFFIC CONTROL PLAN HUEBNER DETOURS
87 - 88	TRAFFIC CONTROL PLAN TEMPORARY SHORING
89 - 94	TRAFFIC CONTROL PLAN ADVANCE WARNING SIGNS & REGULATORY SIGNS
95 - 101	TRAFFIC CONTROL PLAN PHASE 1 STAGE 2
102 - 106	TRAFFIC CONTROL PLAN PHASE 2 STAGE 1
107	TRAFFIC CONTROL PLAN PHASE 2 STAGE 2
108	TRAFFIC CONTROL PLAN PHASE 2 STAGE 3 STEP 1
109	TRAFFIC CONTROL PLAN PHASE 2 STAGE 3 STEP 2
110 - 114	TRAFFIC CONTROL PLAN PHASE 2 STAGE 4
115	TRAFFIC CONTROL PLAN PHASE 2 STAGE 5 STEP 1
116	TRAFFIC CONTROL PLAN PHASE 2 STAGE 5 STEP 2
117 - 120	TRAFFIC CONTROL PLAN PHASE 2 STAGE 6
121 - 126	TRAFFIC CONTROL PLAN PHASE 3 STAGE 1
127 - 132	TRAFFIC CONTROL PLAN PHASE 3 STAGE 2
133 - 137	TRAFFIC CONTROL PLAN PHASE 3 STAGE 3
138 - 143	TRAFFIC CONTROL PLAN PHASE 4 STAGE 1
144 - 149	TRAFFIC CONTROL PLAN PHASE 4 STAGE 2
150 - 154	TRAFFIC CONTROL PLAN PHASE 4 STAGE 3
155 - 163	TRAFFIC CONTROL PLAN PHASE 4 STAGE 4
164 - 172	TRAFFIC CONTROL PLAN PHASE 4 STAGE 5
173 - 181	TRAFFIC CONTROL PLAN PHASE 4 STAGE 6
182	TEMPORARY SIGNAL LAYOUT PH 2-STAGES 1&2
183	TEMPORARY SIGNAL LAYOUT PH 2-STAGE 3-STEP 1
184	TEMPORARY SIGNAL LAYOUT PH 2-STAGE 3-STEP 2
185	TEMPORARY SIGNAL LAYOUT PH 2-STAGE 4
186	TEMPORARY SIGNAL LAYOUT PH 2-STAGE 5-STEP 1
187	TEMPORARY SIGNAL LAYOUT PH 2-STAGE 5-STEP 2
188	TEMPORARY SIGNAL LAYOUT PH 3-STAGE 1
189	TEMPORARY SIGNAL LAYOUT PH 3-STAGE 2
189A	VIA (SFPM)
	STATE STANDARDS
190 - 201	BC(1 THRU 12)-07
202	WZ(BTS-1)-03
203	WZ(BTS-2)-03
204	WZ(TD)-03
206	WZ(STPM)-03
206	WZ(UL)-03
207	WZ(BRK)-03
208 - 211	TCP(1-1)-98 THRU TCP(1-4)-98
212	TCP(2-1)-98
213	TCP(2-2)-03
214	TCP(2-3)-03
215	TCP(2-4)-03
216	TCP(2-5)-03
217	TCP(2-7)-03
218	TCP(3-1)-98
219	TCP(3-3)-98
220	TCP(7-1)-98
221	EDGE CONDITION TREATMENT TYPES
222	SSCB(1)-99
223	SSCB(2)-00A
224 - 226	CSB(1)-04 THRU CSB(3)-04
227	QUAD (N)-99
228	TRACC(N)-05
228A	ABSORB-05
228B	LPCB(1)-92
228C	LPCB(2)-92
	III. ROADWAY
229 - 231	HORIZONTAL ALIGNMENT DATA SHEET
232 - 272	PLAN & PROFILE
273 - 286	CROSS STREET PLAN & PROFILE
287 - 300	INTERSECTION LAYOUTS
301 - 305	DRIVEWAY PROFILES
306 - 311	MISCELLANEOUS ROADWAY DETAILS
	STATE STANDARDS
312	BED-03
313	CCCG-01
314	CRR
315 - 317	MB-06(1)
318	MBGF-03A
319	MBGF(TR)-05
320	PR1
321 - 324	PED-05
325 - 327	PRD-06 (MOD)
328	SGT(7)-03A
329	SGT(8)-03A

SHEET NO.	DESCRIPTION
VOLUME I	IV. RETAINING WALLS
330 - 334	RETAINING WALL KEY MAP
335 - 348	RETAINING WALL PLAN & PROFILE
349 - 351	RETAINING WALL MISCELLANEOUS DETAILS
	STATE STANDARDS
351A	MS-03
352	RW(MSE)
353	RW(CB)
354	RW(TRF)
355	RW 1(H)A
356	RW 1(H)B
357	RW 1(H)C
358	RW 2
	V. DRAINAGE
359	EXTERIOR DRAINAGE AREA MAP
360 - 369	INTERIOR DRAINAGE AREA MAP
370 - 373	DRAINAGE AREA CALCULATIONS
374 - 383	HYDRAULIC CALCULATIONS
384 - 388	HYDRAULIC DATA SHEET BRIDGE CLASS STRUCTURES
389 - 400	HYDRAULIC DATA SHEET NON-BRIDGE CLASS STRUCTURES
401 - 408	CULVERT LAYOUTS
409 - 449	STORM DRAIN PLAN AND PROFILE
450 - 452	STORM DRAIN PROFILES
452A - 452C	MISCELLANEOUS DRAINAGE DETAILS
453	TYPE A CURB INLET DETAILS
454	TYPE B CURB INLET DETAILS
455	BRIDGE CLASS CULVERT DETAILS
456 - 462	RIPRAP LAYOUTS
	STATE STANDARDS
463	SCP-3
464	SCP-4
465	SCP-5
466	SCP-6
466A	SCP-MD
467	MC-MD
468	MC-8-13
469	ECD
470	BCS
471	PW
472	CH-FW-0
473	CH-FW-45
474	CH-PW-0
475 - 476	SETB-CD (MOD)
477	FW-0
478	SW-0
479	SHEET OMITTED
480	IL-C
481 - 482	IL-H-G
483	MH-M
	STATE STANDARDS (SAN ANTONIO DISTRICT)
485 - 484	CURB INLET TYPE C W/ EXTENSION
486	TRAFFIC INLET TYPE W-1 THRU W-5
487	TYPE 6 TRAFFIC GRATE
488	RIPRAP HEADWALL
VOLUME II	VI. UTILITIES
487 - 505	EXISTING UTILITY LAYOUTS
508 - 509	BEXARMET WATER MAIN REPLACEMENT TITLE SHEET
510 - 524	BEXARMET WATER MAIN REPLACEMENT LAYOUTS
525 - 536	SHEETS OMITTED
537 - 539	BEXARMET WATER MAIN REPLACEMENT PROFILES
540 - 553	BEXARMET WATER MAIN REPLACEMENT DETAILS
552A	CPS ENERGY DUCTBANK HORIZONTAL ALIGNMENT DATA
553 - 561	CPS ENERGY DUCTBANK PLAN AND PROFILE
562 - 563	CPS ENERGY DUCTBANK LATERAL PLAN AND PROFILE
564 - 565	CPS ENERGY DUCTBANK DETAILS
566 - 566B	CPS GAS GENERAL NOTES
567	CPS GAS DEPTH A TABLES
568	CPS GAS LOCATION DATA TABLES
569 - 595	CPS GAS RELOCATION PLAN
596 - 597	SHEETS OMITTED
	VII. BRIDGE
598	BRIDGE LAYOUT PANTHER SPRINGS CREEK BRIDGE STRUCTURE NO.3
599 - 600	BRIDGE TYPICALS PANTHER SPRINGS CREEK BRIDGE STRUCTURE NO. 3
601	ESTIMATED QUANTITIES
602	ABUTMENT NO.1-PHASE I
603	ABUTMENT NO.7-PHASE I
604	INTERIOR BENTS NO.2-6-PHASE I
605 - 607	25.00' C-I-P CONCRETE SLAB SPAN-PHASE I
608	ABUTMENT NO.1-PHASE II
609	ABUTMENT NO.7-PHASE II
610	INTERIOR BENTS NO.2-6-PHASE II
611 - 613	25.00' C-I-P CONCRETE SLAB SPAN-PHASE II
614 - 615	MISC. C-I-P SLAB SPAN DETAILS
616	BRIDGE LAYOUT PANTHER SPRINGS CREEK BRIDGE STRUCTURE NO.9
617 - 618	BRIDGE TYPICALS PANTHER SPRINGS CREEK BRIDGE STRUCTURE NO. 9
619	ESTIMATED QUANTITIES & BEARING SEAT ELEVATIONS
620 - 621	ABUTMENT NO.1-PHASE I
622 - 623	ABUTMENT NO.5-PHASE I
624	INTERIOR BENT NO.2-PHASE I
625	INTERIOR BENT NO.3-PHASE I
626	INTERIOR BENT NO.4-PHASE I
627	BEAM LAYOUT-PHASE I
628 - 629	246.00' PRESTR. CONC. BEAM UNIT-PHASE I
630 - 631	ABUTMENT NO.1-PHASE II
632 - 633	ABUTMENT NO.5-PHASE II
634	INTERIOR BENT NO.2-PHASE II
635	INTERIOR BENT NO.3-PHASE II
636	INTERIOR BENT NO.4-PHASE II
637	BEAM LAYOUT-PHASE II
638 - 639	246.00' PRESTR. CONC. BEAM UNIT-PHASE II
640	MISC. SLAB DETAILS

SHEET NO.	DESCRIPTION
VOLUME II	
	STATE STANDARDS
641 - 642	FD
643 - 644	IBD
645	IBND
646 - 647	IBEB
648	MEBR (C)
649	IBMS
650	IBTS
651 - 654	PCP
655 - 656	PMDF
657	AJ
658	BS-EJCP
659 - 660	TYPE C203
661	BAS-A
	VIII. TRAFFIC
662	TRAFFIC SIGNAL NOTES
663	EXISTING SIGNAL LAYOUT-BLANCO RD AT HUEBNER RD
664	PROPOSED SIGNAL LAYOUT-BLANCO RD AT HUEBNER RD
665 - 666	TRAFFIC SIGNAL ELEVATIONS
667	EXISTING SIGNAL LAYOUT-BLANCO RD AT WILDERNESS OAK
668	PROPOSED SIGNAL LAYOUT-BLANCO RD AT WILDERNESS OAK
669	TRAFFIC SIGNAL ELEVATIONS
670	INTERCONNECT LAYOUT-BLANCO RD-WILDERNESS OAK
	STATE STANDARDS
671 - 677	ED(1)-03 THRU ED(7)-03
678	RID(FND)-07
679	SMA-80(1)-99 (MOD)
680	SMA-80(2)-96
681	MA-C-96
682	MA-D-07
683	TS-FD-99 (MOD)
684	LUM-A-99
685	CFA-99
686 - 689	LMA(1)-01 THRU LMA(4)-01 (MOD)
	STATE STANDARDS (SAN ANTONIO DISTRICT)
690	LOOP DETECTOR CONTROLLER FOUNDATION AND TRENCH DETAILS
691	VEHICLE DETECTOR INSTALLATION DETAILS
692	MAST ARM POLE ELEVATION DETAILS
	CITY OF SAN ANTONIO STANDARDS
693	TRAFFIC SIGNAL DETAILS CONDUIT AND FOUNDATIONS
694 - 713	SIGNING LAYOUTS
	STATE STANDARDS
714	TSR(3)-03
715	TSR(4)-03
716	TSR(5)-03
717	BL(RS)-01
718	SOLAR POWERED ROADSIDE FLASHING BEACON ASSEMBLY DETAILS
719	SMD (CODES)-02
720	SMD(GEN)-02
721	SMD(SLIP-1)-02
722	SMD(SLIP-2)-02
723	SMD(SLIP-3)-02
724	W(3)-95
725	D & OM(1)-04 (SAN ANTONIO DISTRICT)
726	D & OM(2)-04 (SAN ANTONIO DISTRICT)
727 - 745	PAVEMENT MARKINGS LAYOUTS
	STATE STANDARDS
746	SAT-BL(PM-1)-97
747	PM(1)-03
748	PM(2)-00A
749	PM(3)-00A
750	PM(4)-03
751	PM(5)-01
752	PM(6)-01
753	BL(PM-2)-97 (SAN ANTONIO DISTRICT)
754	TYPICAL CROSSWALK DETAILS (SAN ANTONIO DISTRICT)
755 - 759	TWO WAY LEFT TURN LANE DETAILS (SAN ANTONIO DISTRICT)
	IX. ENVIRONMENTAL
760	EPIC SHEET
761	TCEQ GENERAL CONSTRUCTION NOTES
762	SW3P NARRATIVE
763 - 781	SW3P LAYOUT PHASE 1 STAGE 1
782 - 788	SW3P LAYOUT PHASE 1 STAGE 2
789 - 793	SW3P LAYOUT PHASE 2 STAGE 1
794	SW3P LAYOUT PHASE 2 STAGE 2
795	SW3P LAYOUT PHASE 2 STAGE 3
796 - 800	SW3P LAYOUT PHASE 2 STAGE 4
801	SW3P LAYOUT PHASE 2 STAGE 5
802 - 806	SW3P LAYOUT PHASE 3 STAGE 1
807 - 811	SW3P LAYOUT PHASE 3 STAGE 2
812 - 815	SW3P LAYOUT PHASE 4 STAGE 1
816 - 819	SW3P LAYOUT PHASE 4 STAGE 2
820 - 829	SW3P LAYOUT PHASE 4 STAGE 3
830 - 837	SW3P LAYOUT PHASE 4 STAGE 4
838 - 839	SHEETS OMITTED
	STATE STANDARDS
840	EC(1)-93
841	EC(2)-93
842	EC(3)-93

THE STANDARD SHEETS HAVE BEEN SELECTED BY ME OR UNDER MY RESPONSIBLE SUPERVISION AS BEING APPLICABLE TO THIS PROJECT.

STATE OF TEXAS
DAVID R. WEGMANN
95949
LICENSED
PROFESSIONAL ENGINEER

02/11/08
DATE

P.E.

DAVID R. WEGMANN

NO.	REVISION	BY	DATE

CP&Y Chiang, Patel & Yerby, Inc.

BEXAR COUNTY
PUBLIC WORKS DIVISION

F.M. 2696 (BLANCO ROAD)

INDEX OF SHEETS

Designed: RTF	STATE	BEXAR COUNTY FILE NUMBER	PLAN SET NO.
Checked: JMC	TEXAS		---
Drawn: RG	COUNTY		OF
Checked: JMC	BEXAR	2708-01-022, ETC.	842

pw:/Active Projects/BEX6102/8.00 Plans and Drawings/8.10 Cut Sheets/8.1.05 General/6102CSR00D01.dgn
2/11/2008 1:09:59 PM

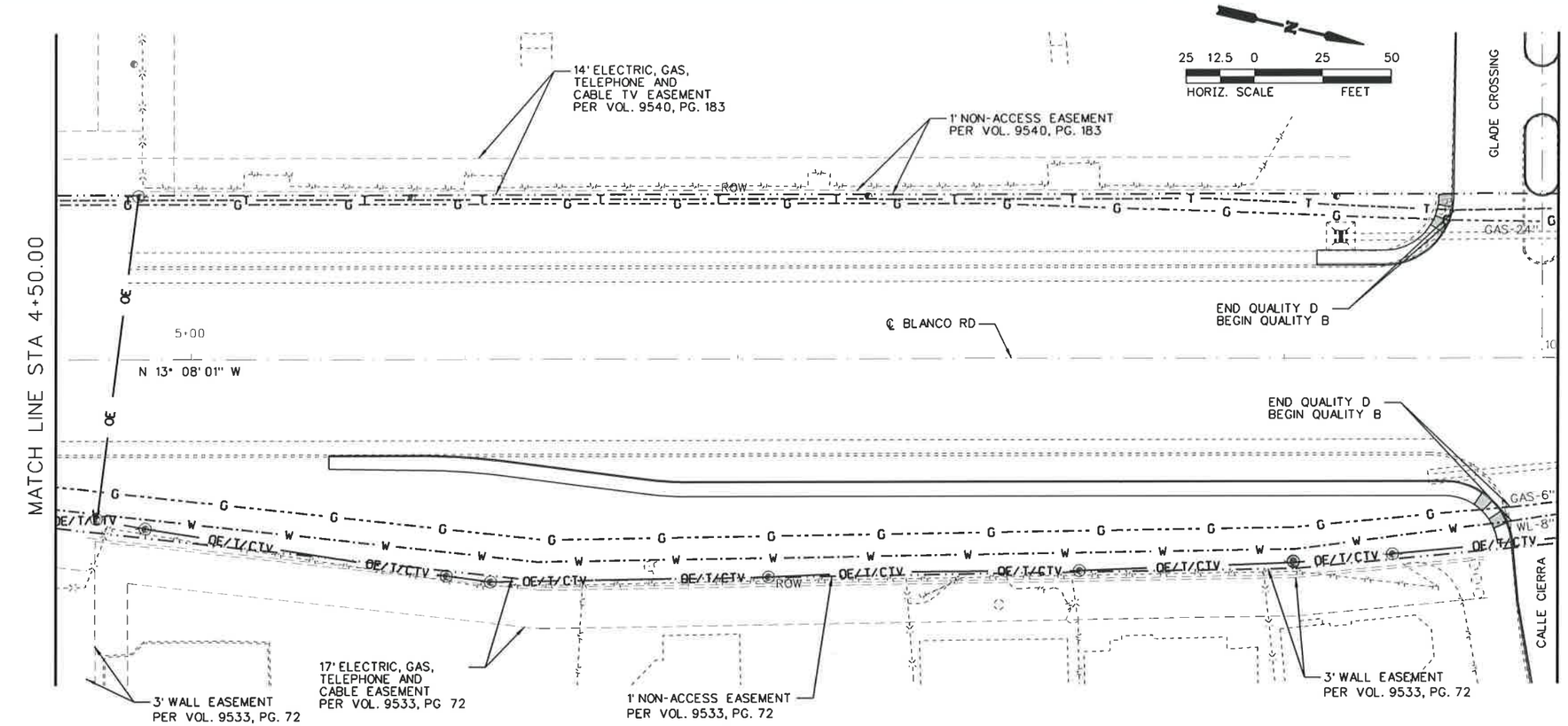

LEGEND

ELECTRIC	E	CPS
TRAFFIC SIGNAL	TS	TxDOT
GAS	G	CPS
FIBER OPTIC	FOC	AT&T
TELEPHONE	T	AT&T
WATER	W	BEXAR MET
WASTE WATER	WW	SAWS
OVERHEAD ELECTRIC TELEPHONE CABLE TV	OE/T/CTV	CPS/ AT&T/TIME WARNER
OVERHEAD ELECTRIC CABLE TV FIBER OPTIC TELEPHONE	OE/CTV/FOC/T	CPS/TIME WARNER/ AT&T/AT&T
TEL /SEWER MANHOLE		
ELECTRIC JUNCTION BOX		
LIGHT LUMINARE		
TRAFFIC CONTROL BOX		
POWER POLE		
TELEPHONE PEDESTAL		
WATER/GAS VALVE		
WATER METER		
FIRE HYDRANT		
GAS VENT		

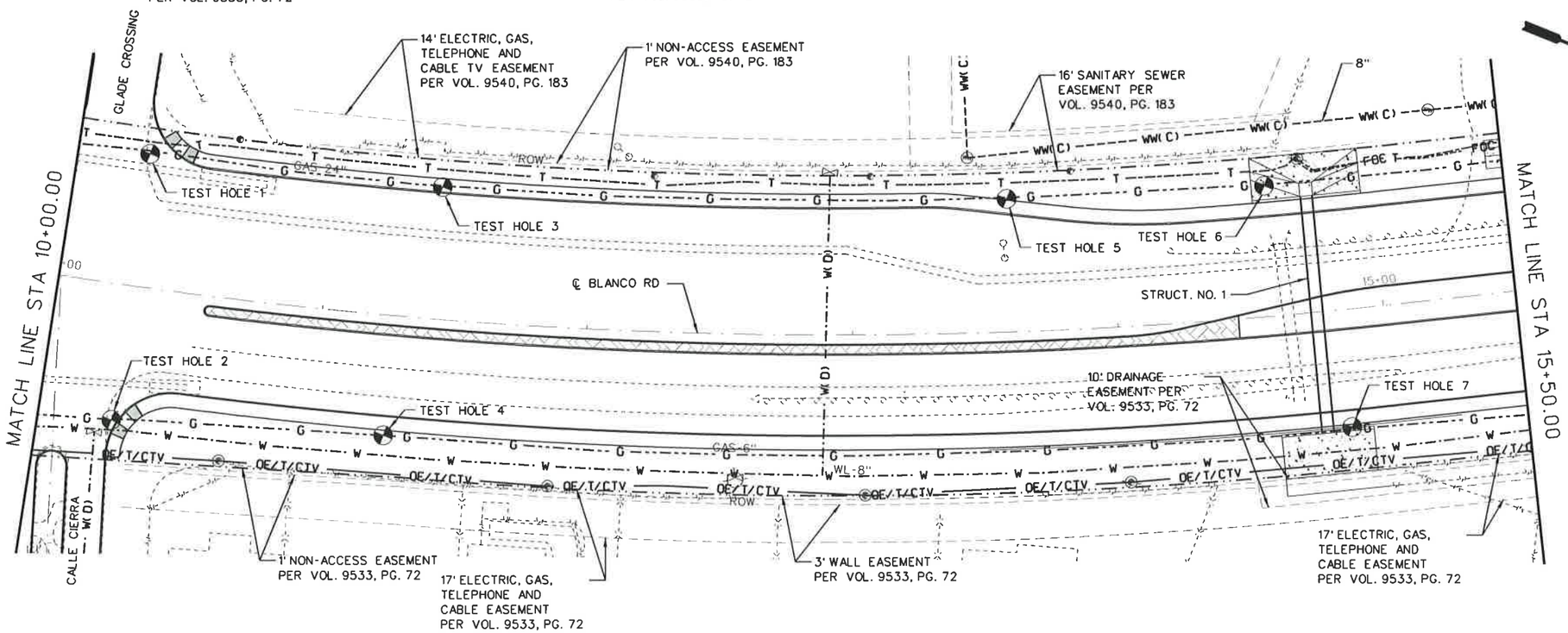

The seal appearing on this document was authorized by Joseph A. Murphy, P.E. 89796

STATE OF TEXAS
JOSEPH A. MURPHY
89796
REGISTERED PROFESSIONAL ENGINEER

NO.	REVISION	BY	DATE

CP&Y Chiang, Patel & Yerby, Inc.

LTRA 400 N. St. Paul Dallas, Texas 75201 (214)979-1144 Fax (214)979-2480

BEXAR COUNTY PUBLIC WORKS DIVISION

F.M. 2696 (BLANCO ROAD)

EXISTING UTILITY LAYOUT

STA 4+50.00 TO STA 15+50.00

SHEET 1 OF 19

Designed: GM	STATE	BEXAR COUNTY FILE NUMBER	PLAN SET NO. 488A
Checked: JM	TEXAS		
Drawn: JA	COUNTY		OF
Checked: AM	BEXAR		8&2

p:\projects\blanco_rd_sue\sheets\6102CSROUT01.050
12/6/2007 4:58:18 PM

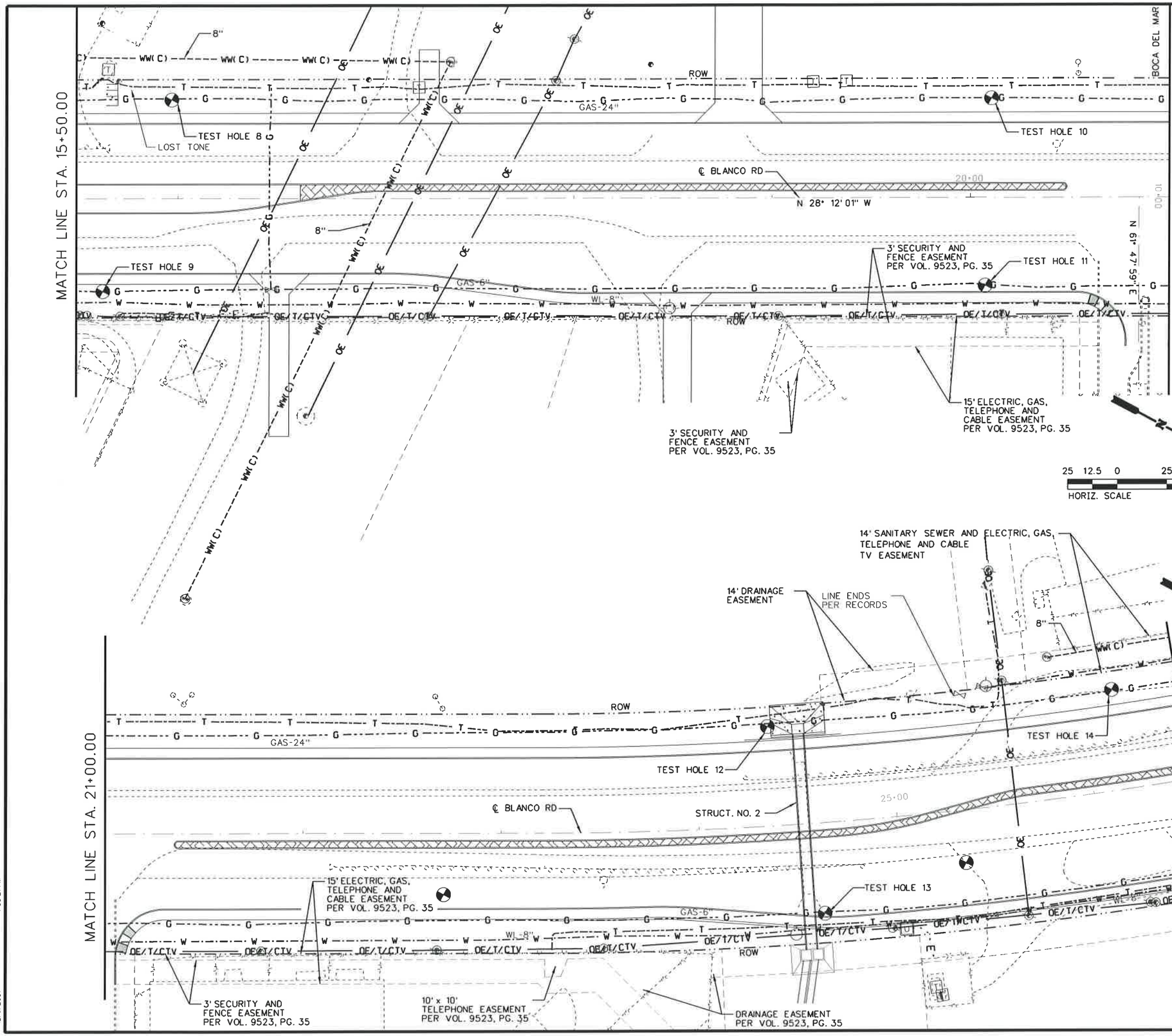

LEGEND

ELECTRIC	E	CPS
TRAFFIC SIGNAL	TS	TxDOT
GAS	G	CPS
FIBER OPTIC	FOC	AT&T
TELEPHONE	T	AT&T
WATER	W	BEXAR MET
WASTE WATER	WW	SAWS
OVERHEAD ELECTRIC TELEPHONE CABLE TV	OE/T/CTV	CPS/ AT&T/TIME WARNER
OVERHEAD ELECTRIC CABLE TV FIBER OPTIC TELEPHONE	OE/CTV/FOC/T	CPS/TIME WARNER/ AT&T/AT&T

TEL /SEWER MANHOLE
ELECTRIC JUNCTION BOX
LIGHT LUMINARE
TRAFFIC CONTROL BOX
POWER POLE
TELEPHONE PEDESTAL
WATER/GAS VALVE
WATER METER
FIRE HYDRANT
GAS VENT

The seal appearing on this document was authorized by Joseph A. Murphy, P.E. 89796

STATE OF TEXAS
JOSEPH A. MURPHY
89796
REGISTERED PROFESSIONAL ENGINEER

12/6/07

NO.	REVISION	BY	DATE

CP&Y Chiang, Patel & Yerby, Inc.

LTRA 400 N. St. Paul Dallas, Texas 75201 (214)979-1144 Fax (214)979-2480

BEXAR COUNTY PUBLIC WORKS DIVISION

F.M. 2696 (BLANCO ROAD)

EXISTING UTILITY LAYOUT

STA 15+50.00 TO STA 26+50.00

SHEET 2 OF 19

Designed: MG	STATE	BEXAR COUNTY FILE NUMBER	PLAN SET NO.	488B
Checked: JM	TEXAS			
Drawn: JA	COUNTY		OF	842
Checked: AM	BEXAR			

p:\projects\B\blanco_rd_sue\sheets\6102CSRDUT02.050
12/6/2007 4:58:21 PM

25 12.5 0 25 50
HORIZ. SCALE FEET

MATCH LINE STA 26+50.00

MATCH LINE STA 32+00.00

MATCH LINE STA 37+50.00

HUEBNER RD.

GREYSTONE RIDGE

℄ BLANCO RD

TEST HOLE 15

TEST HOLE 16

TEST HOLE 17

TEST HOLE 18

TEST HOLE 19

TEST HOLE 20

STRUCT. NO. 3

LOST TONE

ROW

WW-8"

GAS-24"

GAS-6"

WL-12"

WL-20"

WL-16"

30+00

5+00

32+24.59' E

14' ELECTRIC, GAS, TELEPHONE AND CABLE EASEMENT PER VOL. 9540, PG. 192

16' SANITARY SEWER' ELECTRIC, GAS, TELEPHONE AND CABLE EASEMENT PER VOL. 9528, PG. 4

14' x 14' ABOVE GROUND GAS REGULATOR EASEMENT PER VOL. 9528, PG. 4

1' WALL EASEMENT PER VOL. 9528, PG. 4

2' NON-ACCESS EASEMENT PER VOL. 9528, PG. 4

EXISTING VARIABLE WIDTH DRAINAGE EASEMENT PER VOL. 9511, PG. 204-207

ROAD EASEMENT PER VOL. 9550, PG. 52

14' ELECTRIC, GAS, TELEPHONE AND CABLE TV EASEMENT PER VOL. 9550, PG. 52

LEVEL (D) MH

PANTHER SPRINGS CREEK

24"

LEGEND

ELECTRIC	E	CPS
TRAFFIC SIGNAL	TS	TxDOT
GAS	G	CPS
FIBER OPTIC	FOC	AT&T
TELEPHONE	T	AT&T
WATER	W	BEXAR MET
WASTE WATER	WW	SAWS
OVERHEAD ELECTRIC TELEPHONE CABLE TV	OE/T/CTV	CPS/ AT&T/TIME WARNER
OVERHEAD ELECTRIC CABLE TV FIBER OPTIC TELEPHONE	OE/CTV/FOC/T	CPS/TIME WARNER/ AT&T/AT&T
TEL /SEWER MANHOLE		
ELECTRIC JUNCTION BOX		
LIGHT LUMINARE		
TRAFFIC CONTROL BOX		
POWER POLE		
TELEPHONE PEDESTAL		
WATER/GAS VALVE		
WATER METER		
FIRE HYDRANT		
GAS VENT		

The seal appearing on this document was authorized by Joseph A. Murphy, P.E. 89796

STATE OF TEXAS
JOSEPH A. MURPHY
89796
REGISTERED PROFESSIONAL ENGINEER

NO.	REVISION	BY	DATE

CP&Y Chiang, Patel & Yerby, Inc.

LTRA

400 N. St. Paul
Dallas, Texas 75201
(214)979-1144
Fax (214)979-2480

BEXAR COUNTY
PUBLIC WORKS DIVISION

F.M. 2696 (BLANCO ROAD)

EXISTING UTILITY LAYOUT

STA 26+50.00 TO STA 37+50.00

SHEET 3 OF 19

Designed:	MG	STATE	BEXAR COUNTY FILE NUMBER	PLAN SET NO.
Checked:	JM	TEXAS		487
Drawn:	JA	COUNTY		OF
Checked:	AM	BEXAR		842

p:\projects6\blanco_rd_sue\sheets\6102CSROUT03.050
12/6/2007
4:58:24 PM

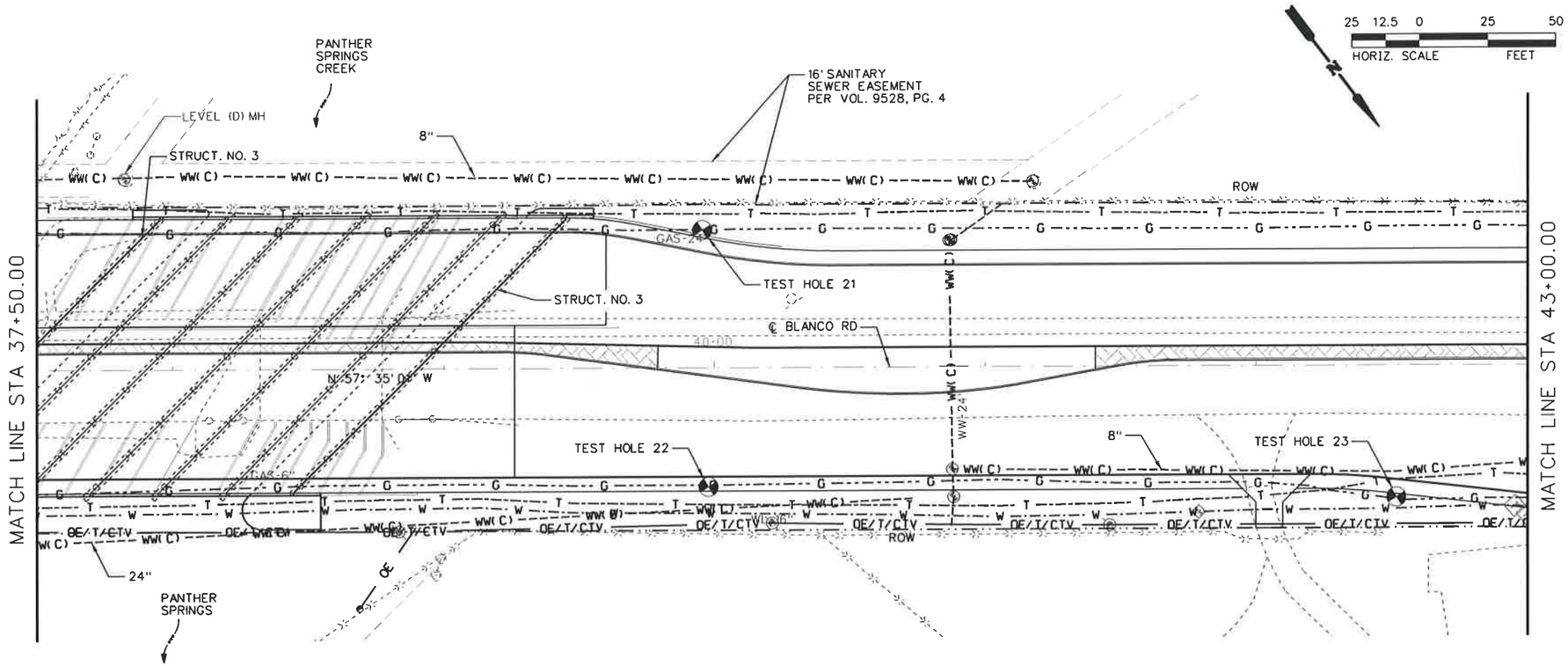

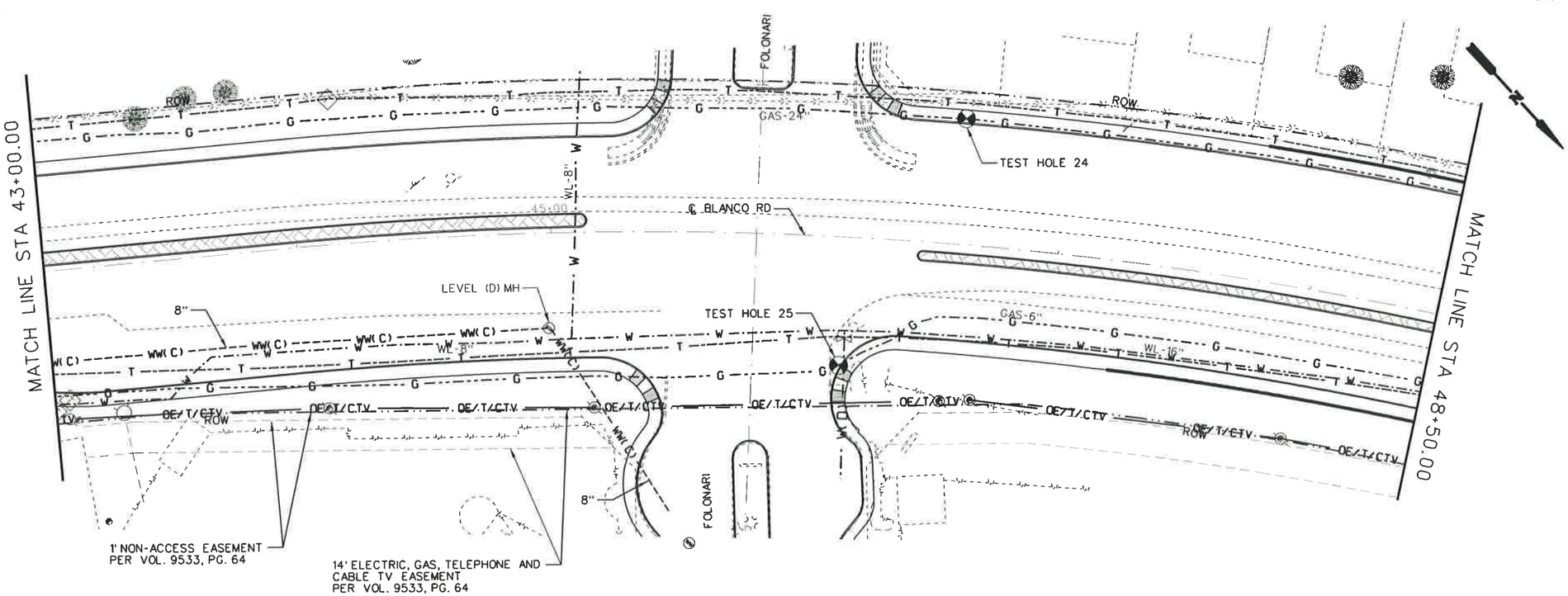

LEGEND

ELECTRIC	E	CPS
TRAFFIC SIGNAL	TS	TxDOT
GAS	G	CPS
FIBER OPTIC	FOC	AT&T
TELEPHONE	T	AT&T
WATER	W	BEXAR MET
WASTE WATER	WW	SAWS
OVERHEAD ELECTRIC TELEPHONE CABLE TV	OE/T/CTV	CPS/ AT&T/TIME WARNER
OVERHEAD ELECTRIC CABLE TV FIBER OPTIC TELEPHONE	OE/CTV/FOC/T	CPS/TIME WARNER/ AT&T/AT&T

TEL /SEWER MANHOLE
ELECTRIC JUNCTION BOX
LIGHT LUMINARE
TRAFFIC CONTROL BOX
POWER POLE
TELEPHONE PEDESTAL
WATER/GAS VALVE
WATER METER
FIRE HYDRANT
GAS VENT

The seal appearing on this document was authorized by Joseph A. Murphy, P.E. 89796

STATE OF TEXAS
JOSEPH A. MURPHY
89796
REGISTERED PROFESSIONAL ENGINEER

NO.	REVISION	BY	DATE

CP&Y Chiang, Patel & Yerby, Inc.

LTRA

400 N. St. Paul
Dallas, Texas 75201
(214)979-1144
Fax (214)979-2480

BEXAR COUNTY PUBLIC WORKS DIVISION

F.M. 2696 (BLANCO ROAD)

EXISTING UTILITY LAYOUT

STA 37+50.00 TO STA 48+50.00

SHEET 4 OF 19

Designed: MG	STATE	BEXAR COUNTY FILE NUMBER	PLAN SET NO.	49.0
Checked: JM	TEXAS			
Drawn: JA	COUNTY		OF	842
Checked: AM	BEXAR			

p:\projects\8\blanco_rd_bue\sheets\6102CSRDUT04.050
12/6/2007
4:58:28 PM

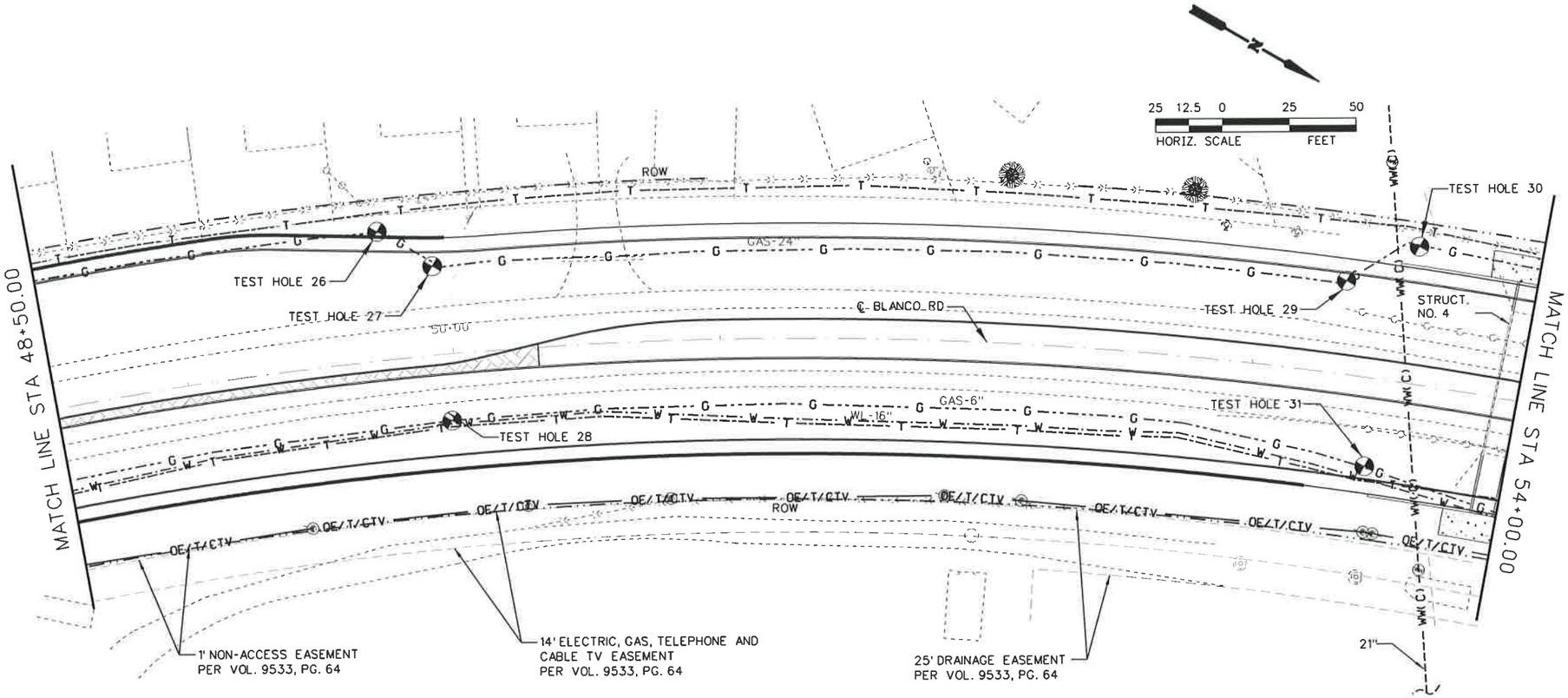

LEGEND

ELECTRIC	E	CPS
TRAFFIC SIGNAL	TS	TxDOT
GAS	G	CPS
FIBER OPTIC	FOC	AT&T
TELEPHONE	T	AT&T
WATER	W	BEXAR MET
WASTE WATER	WW	SAWS
OVERHEAD ELECTRIC TELEPHONE CABLE TV	OE/T/CTV	CPS/ AT&T/TIME WARNER
OVERHEAD ELECTRIC CABLE TV FIBER OPTIC TELEPHONE	OE/CTV/FOC/T	CPS/TIME WARNER/ AT&T/AT&T

TEL /SEWER MANHOLE
ELECTRIC JUNCTION BOX
LIGHT LUMINARE
TRAFFIC CONTROL BOX
POWER POLE
TELEPHONE PEDESTAL
WATER/GAS VALVE
WATER METER
FIRE HYDRANT
GAS VENT

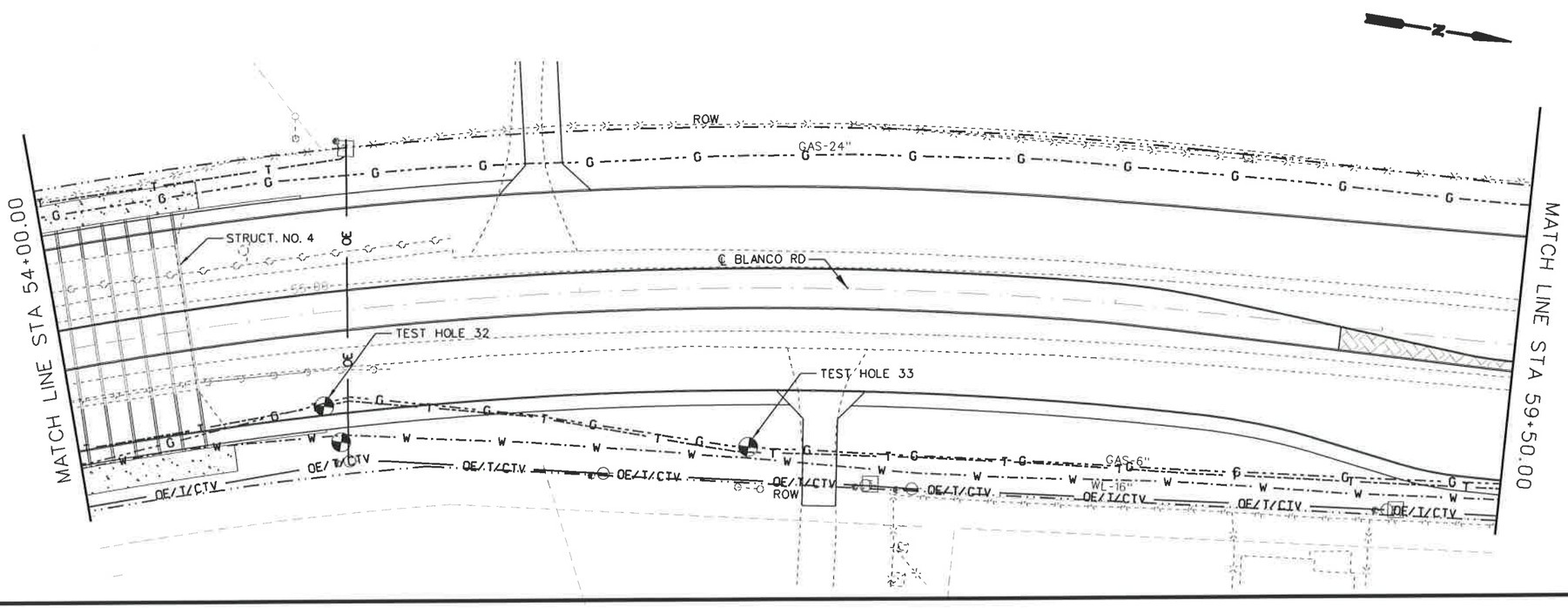

The seal appearing on this document was authorized by Joseph A. Murphy, P.E. 89796

STATE OF TEXAS
JOSEPH A. MURPHY
89796
REGISTERED PROFESSIONAL ENGINEER

NO.	REVISION	BY	DATE

CP&Y Chiang, Patel & Yerby, Inc.

LTRA

400 N. St. Paul
Dallas, Texas 75201
(214)979-1144
Fax (214)979-2480

BEXAR COUNTY
PUBLIC WORKS DIVISION

F.M. 2696 (BLANCO ROAD)

EXISTING UTILITY LAYOUT

STA 48+50.00 TO STA 59+50.00

SHEET 5 OF 19

Designed: MG	STATE	BEXAR COUNTY FILE NUMBER	PLAN SET NO.
Checked: JM	TEXAS		491
Drawn: JA	COUNTY		OF
Checked: AM	BEXAR		842

p:\projects\6\blanco_rd_sue\sheets\6102CSRDUT05.050
12/6/2007
4:58:31 PM

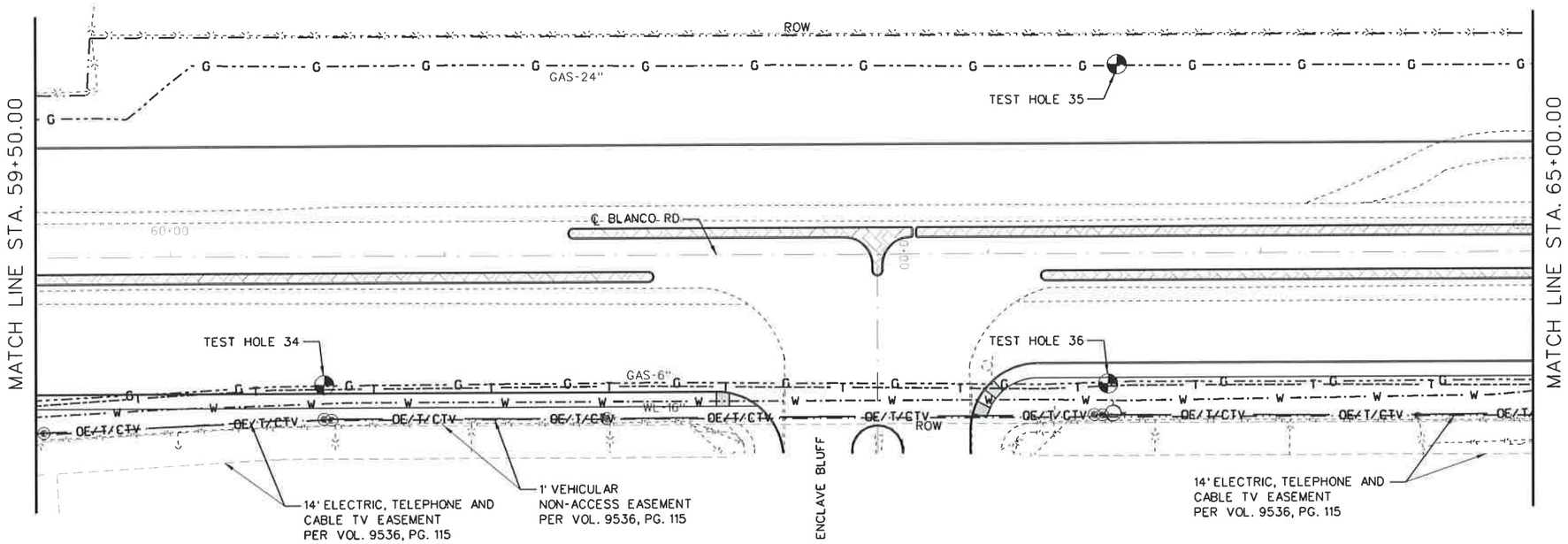

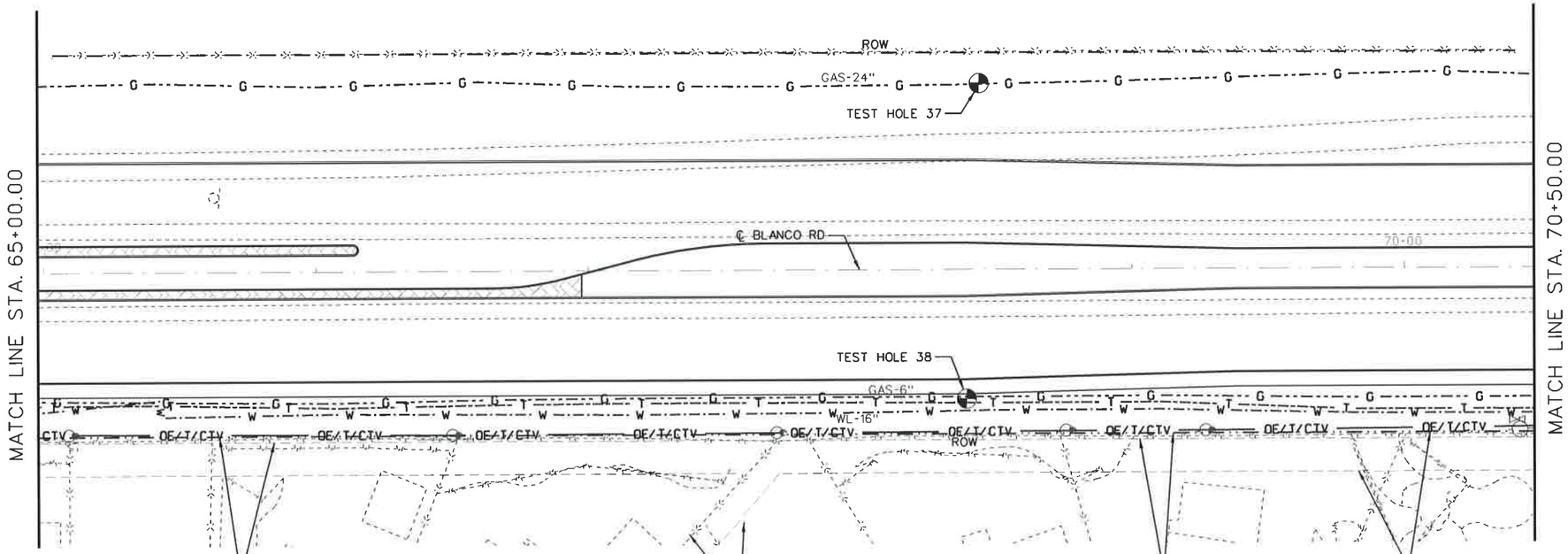

LEGEND

ELECTRIC	E	CPS
TRAFFIC SIGNAL	TS	TxDOT
GAS	G	CPS
FIBER OPTIC	FOC	AT&T
TELEPHONE	T	AT&T
WATER	W	BEXAR MET
WASTE WATER	WW	SAWS
OVERHEAD ELECTRIC TELEPHONE CABLE TV	OE/T/CTV	CPS/ AT&T/TIME WARNER
OVERHEAD ELECTRIC CABLE TV FIBER OPTIC TELEPHONE	OE/CTV/FOC/T	CPS/TIME WARNER/ AT&T/AT&T

TEL /SEWER MANHOLE
ELECTRIC JUNCTION BOX
LIGHT LUMINARE
TRAFFIC CONTROL BOX
POWER POLE
TELEPHONE PEDESTAL
WATER/GAS VALVE
WATER METER
FIRE HYDRANT
GAS VENT

The seal appearing on this document was authorized by Joseph A. Murphy, P.E. 89796

STATE OF TEXAS
JOSEPH A. MURPHY
89796
REGISTERED PROFESSIONAL ENGINEER

NO.	REVISION	BY	DATE

CP&Y Chiang, Patel & Yerby, Inc.

LTRA 400 N. St. Paul
Dallas, Texas 75201
(214)979-1144
Fax (214)979-2480

BEXAR COUNTY PUBLIC WORKS DIVISION

F.M. 2696 (BLANCO ROAD)

EXISTING UTILITY LAYOUT

STA 59+50.00 TO STA 70+50.00

SHEET 6 OF 19

Designed: MG	STATE	BEXAR COUNTY FILE NUMBER	PLAN SET NO.	
Checked: JM	TEXAS		492	
Drawn: JA	COUNTY		OF	
Checked: AM	BEXAR		842	

p:\projects\8\blanco_rd_sue\sheets\8102CSRDUT06.050
12/6/2007 4:58:34 PM

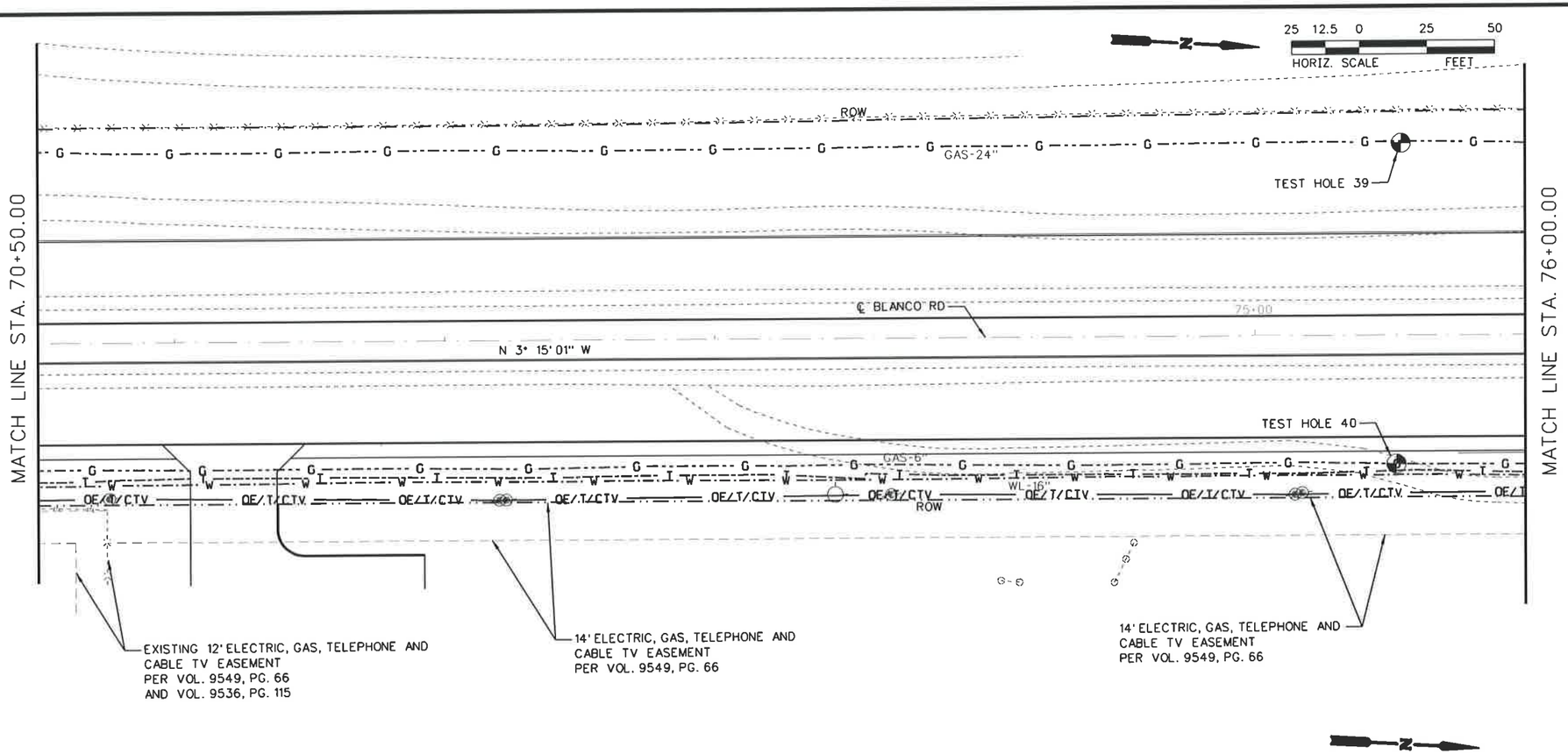

LEGEND

ELECTRIC	E	CPS
TRAFFIC SIGNAL	TS	TxDOT
GAS	G	CPS
FIBER OPTIC	FOC	AT&T
TELEPHONE	T	AT&T
WATER	W	BEXAR MET
WASTE WATER	WW	SAWS
OVERHEAD ELECTRIC TELEPHONE CABLE TV	OE/T/CTV	CPS/ AT&T/TIME WARNER
OVERHEAD ELECTRIC CABLE TV FIBER OPTIC TELEPHONE	OE/CTV/FOC/T	CPS/TIME WARNER/ AT&T/AT&T

TEL /SEWER MANHOLE
ELECTRIC JUNCTION BOX
LIGHT LUMINARE
TRAFFIC CONTROL BOX
POWER POLE
TELEPHONE PEDESTAL
WATER/GAS VALVE
WATER METER
FIRE HYDRANT
GAS VENT

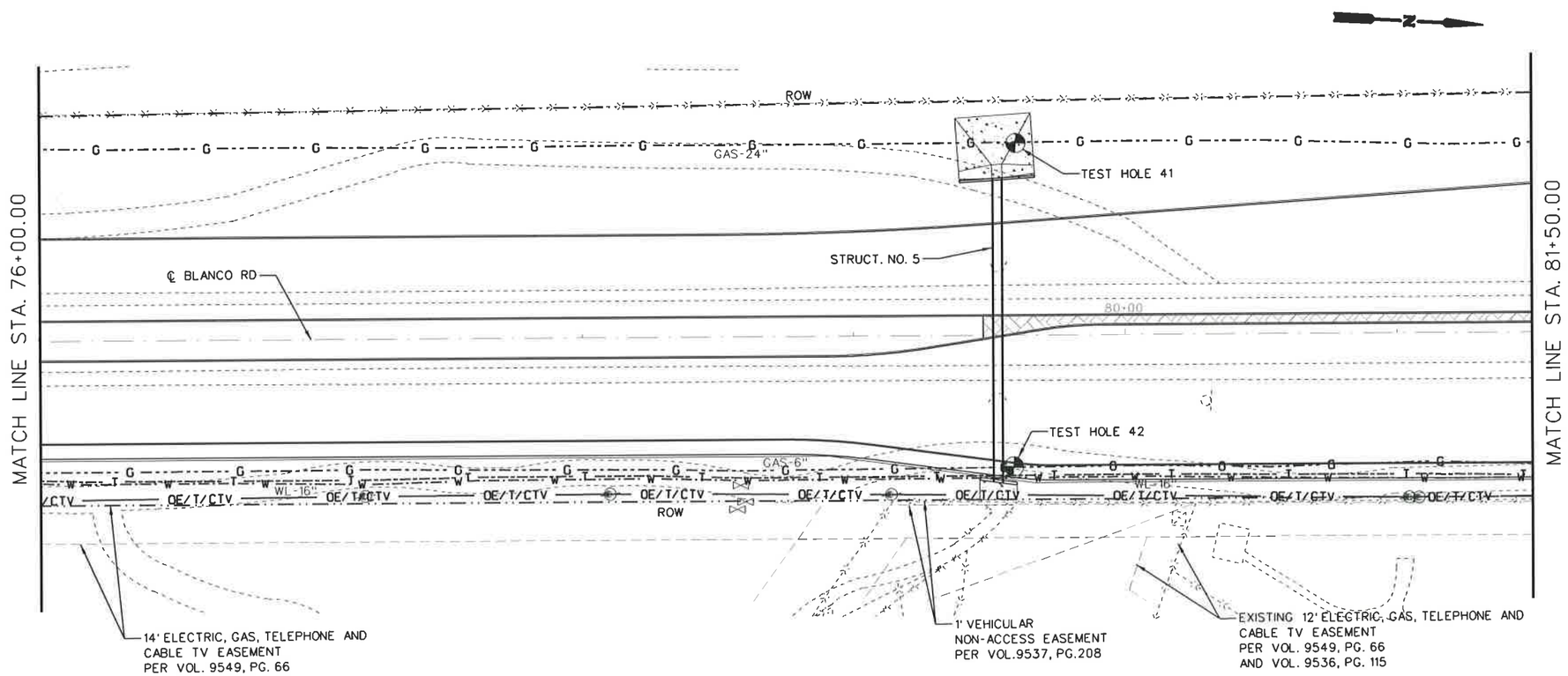

The seal appearing on this document was authorized by Joseph A. Murphy, P.E. 89796

STATE OF TEXAS
JOSEPH A. MURPHY
89796
REGISTERED PROFESSIONAL ENGINEER
12-2007

NO.	REVISION	BY	DATE

CP&Y Chiang, Patel & Yerby, Inc.

LTRA
400 N. St. Paul
Dallas, Texas 75201
(214)979-1144
Fax (214)979-2480

BEXAR COUNTY PUBLIC WORKS DIVISION

F.M. 2696 (BLANCO ROAD)

EXISTING UTILITY LAYOUT

STA 70+50.00 TO STA 81+50.00

SHEET 7 OF 19

Designed: MG	STATE	BEXAR COUNTY FILE NUMBER	PLAN SET NO. 493
Checked: JM	TEXAS		
Drawn: JA	COUNTY		OF
Checked: AM	BEXAR		842

p:\projects\blanco_rd_sue\sheets\6102CSRDUT07.050
12/6/2007 4:58:37 PM

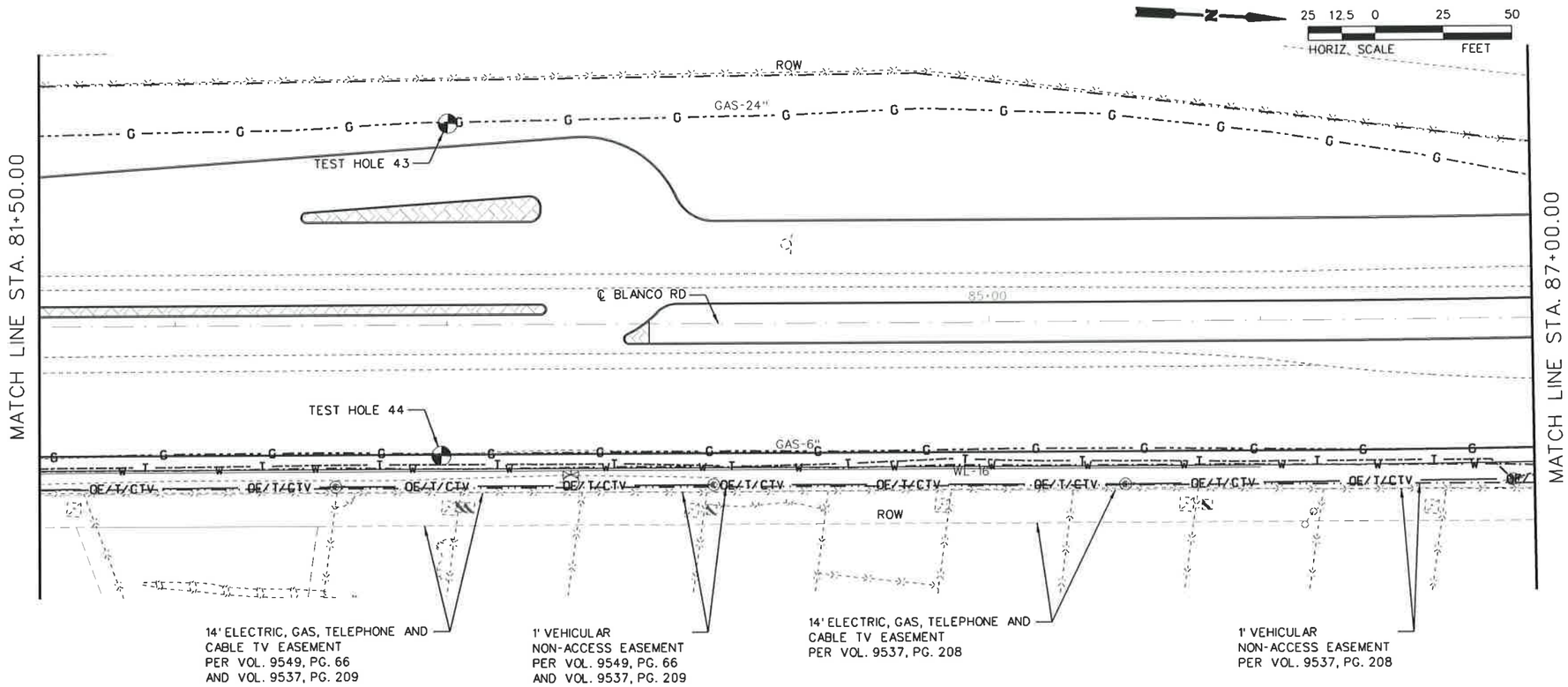

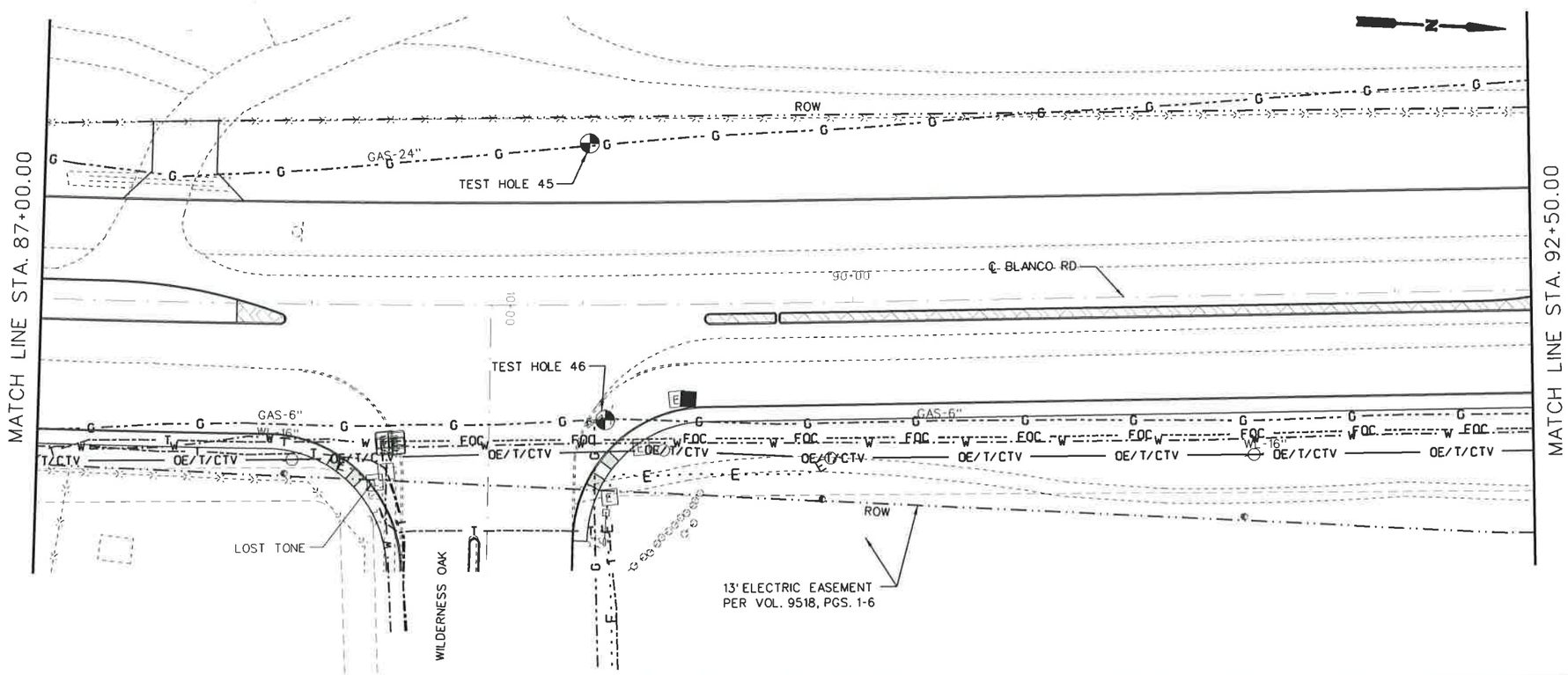

LEGEND

ELECTRIC	E	CPS
TRAFFIC SIGNAL	TS	TxDOT
GAS	G	CPS
FIBER OPTIC	FOC	AT&T
TELEPHONE	T	AT&T
WATER	W	BEXAR MET
WASTE WATER	WW	SAWS
OVERHEAD ELECTRIC TELEPHONE CABLE TV	OE/T/CTV	CPS/ AT&T/TIME WARNER
OVERHEAD ELECTRIC CABLE TV FIBER OPTIC TELEPHONE	OE/CTV/FOC/T	CPS/TIME WARNER/ AT&T/AT&T
TEL /SEWER MANHOLE		
ELECTRIC JUNCTION BOX		
LIGHT LUMINARE		
TRAFFIC CONTROL BOX		
POWER POLE		
TELEPHONE PEDESTAL		
WATER/GAS VALVE		
WATER METER		
FIRE HYDRANT		
GAS VENT		

The seal appearing on this document was authorized by Joseph A. Murphy, P.E. 89796

STATE OF TEXAS
JOSEPH A. MURPHY
89796
REGISTERED
PROFESSIONAL ENGINEER

12-6-07

NO.	REVISION	BY	DATE

CP&Y Chiang, Patel & Yerby, Inc.

LTRA

400 N. St. Paul
Dallas, Texas 75201
(214)979-1144
Fax (214)979-2480

BEXAR COUNTY
PUBLIC WORKS DIVISION

F.M. 2696 (BLANCO ROAD)

EXISTING UTILITY LAYOUT

STA 81+50.00 TO STA 92+50.00

SHEET 8 OF 19

Designed: MG	STATE	BEXAR COUNTY FILE NUMBER	PLAN SET NO. 474
Checked: JM	TEXAS		
Drawn: JA	COUNTY		OF
Checked: AM	BEXAR		842

p:\projects\B\blanco_rd_sue\sheets\6102CSROUT08.050
12/6/2007
4:58:40 PM

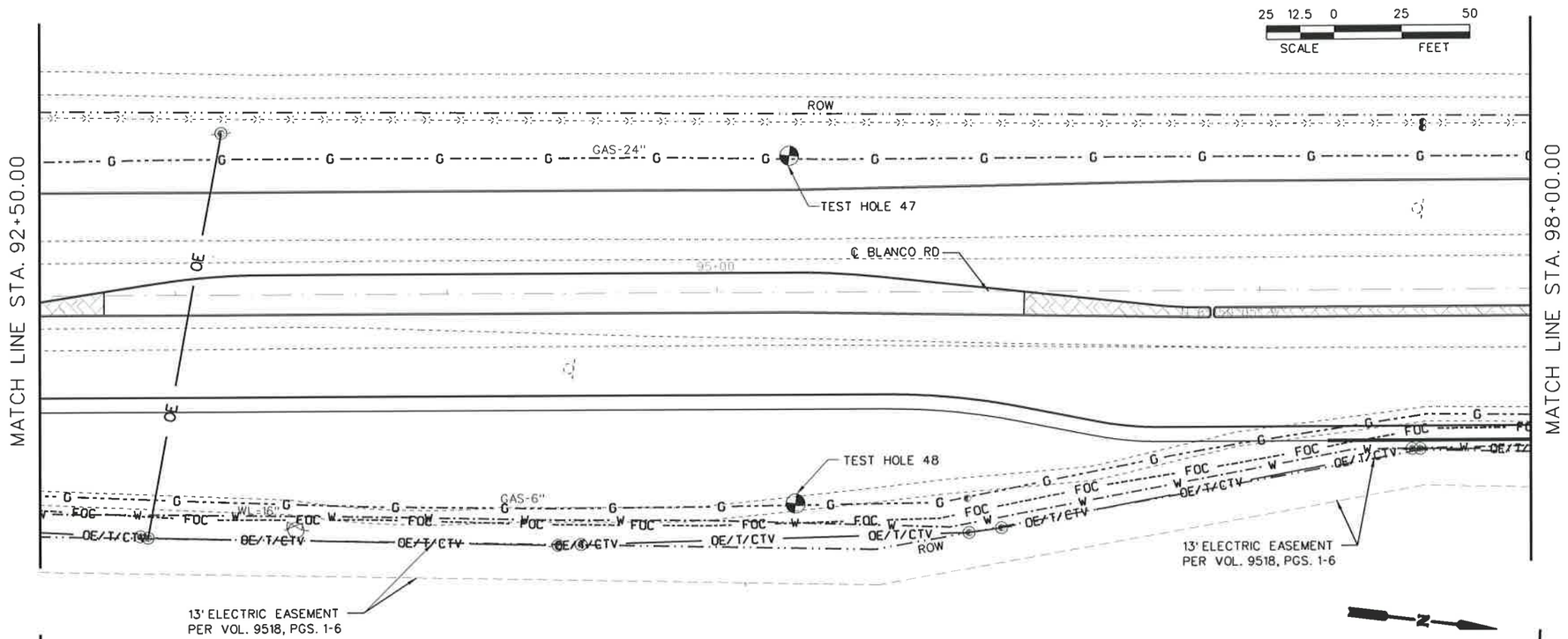

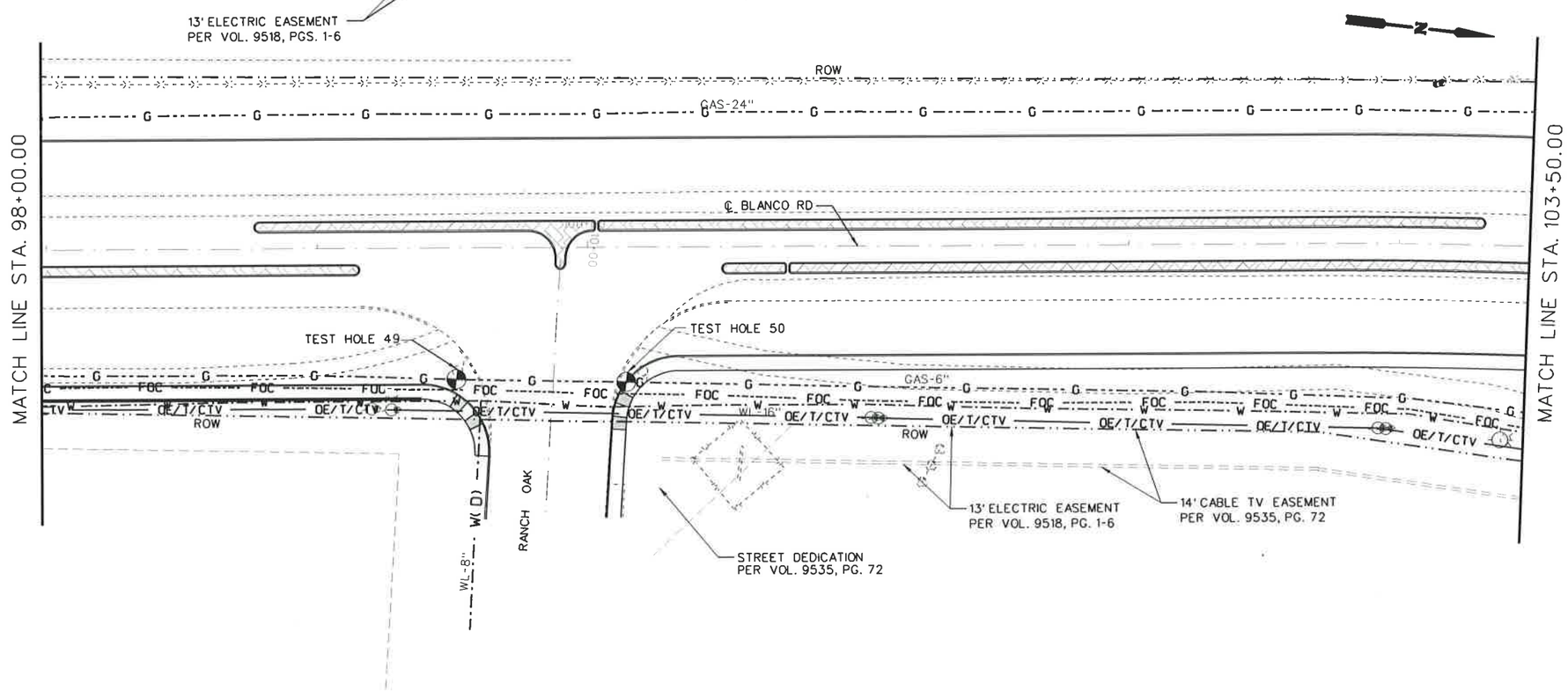

LEGEND

ELECTRIC	E	CPS
TRAFFIC SIGNAL	TS	TxDOT
GAS	G	CPS
FIBER OPTIC	FOC	AT&T
TELEPHONE	T	AT&T
WATER	W	BEXAR MET
WASTE WATER	WW	SAWS
OVERHEAD ELECTRIC TELEPHONE CABLE TV	OE/T/CTV	CPS/ AT&T/TIME WARNER
OVERHEAD ELECTRIC CABLE TV FIBER OPTIC TELEPHONE	OE/CTV/FOC/T	CPS/TIME WARNER/ AT&T/AT&T
TEL /SEWER MANHOLE		
ELECTRIC JUNCTION BOX		
LIGHT LUMINARE		
TRAFFIC CONTROL BOX		
POWER POLE		
TELEPHONE PEDESTAL		
WATER/GAS VALVE		
WATER METER		
FIRE HYDRANT		
GAS VENT		

The seal appearing on this document was authorized by Joseph A. Murphy, P.E. 89796

STATE OF TEXAS
JOSEPH A. MURPHY
89796
REGISTERED
PROFESSIONAL ENGINEER

12-6-07

NO.	REVISION	BY	DATE

CP&Y Chiang, Patel & Yerby, Inc.

LTRA

400 N. St. Paul
Dallas, Texas 75201
(214)979-1144
Fax (214)979-2480

BEXAR COUNTY
PUBLIC WORKS DIVISION

F.M. 2696 (BLANCO ROAD)

EXISTING UTILIY LAYOUT

STA 92+50.00 TO STA 103+50.00

SHEET 9 OF 19

Designed: MG	STATE	BEXAR COUNTY FILE NUMBER	PLAN SET NO.
Checked: JM	TEXAS		495
Drawn: JA	COUNTY		OF
Checked: AM	BEXAR		842

p:\projects\8\blanco_rd_sus\sheets\6102CSRDUT09.050
12/6/2007
4:58:43 PM

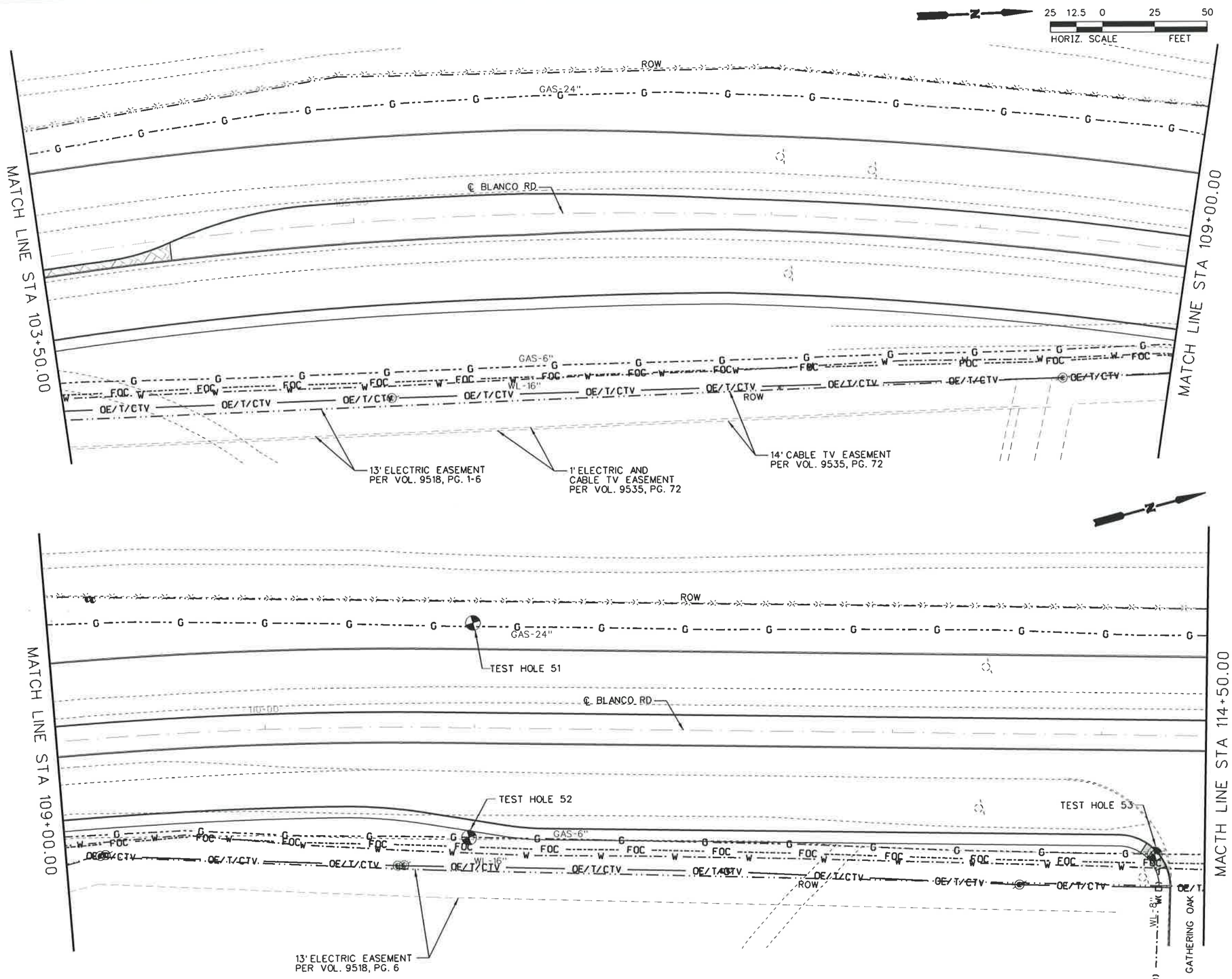

LEGEND

ELECTRIC	E	CPS
TRAFFIC SIGNAL	TS	TxDOT
GAS	G	CPS
FIBER OPTIC	FOC	AT&T
TELEPHONE	T	AT&T
WATER	W	BEXAR MET
WASTE WATER	WW	SAWS
OVERHEAD ELECTRIC TELEPHONE CABLE TV	OE/T/CTV	CPS/ AT&T/TIME WARNER
OVERHEAD ELECTRIC CABLE TV FIBER OPTIC TELEPHONE	OE/CTV/FOC/T	CPS/TIME WARNER/ AT&T/AT&T
TEL /SEWER MANHOLE		
ELECTRIC JUNCTION BOX		
LIGHT LUMINARE		
TRAFFIC CONTROL BOX		
POWER POLE		
TELEPHONE PEDESTAL		
WATER/GAS VALVE		
WATER METER		
FIRE HYDRANT		
GAS VENT		

The seal appearing on this document was authorized by Joseph A. Murphy, P.E. 89796

STATE OF TEXAS
JOSEPH A. MURPHY
89796
REGISTERED
PROFESSIONAL ENGINEER

12-6-07

NO.	REVISION	BY	DATE

CP&Y Chiang, Patel & Yerby, Inc.

LTRA 400 N. St. Paul
Dallas, Texas 75201
(214)979-1144
Fax (214)979-2480

BEXAR COUNTY
PUBLIC WORKS DIVISION

F.M. 2696 (BLANCO ROAD)

EXISTING UTILITY LAYOUT

STA 103+50.00 TO STA 114+50.00

SHEET 10 OF 19

Designed: GM	STATE	BEXAR COUNTY FILE NUMBER	PLAN SET NO.
Checked: JM	TEXAS		496
Drawn: JA	COUNTY		OF
Checked: AM	BEXAR		842

p:\projects98\blanco_rd_sue\sheets\5102CSRDUT10.050
12/6/2007 4:58:45 PM

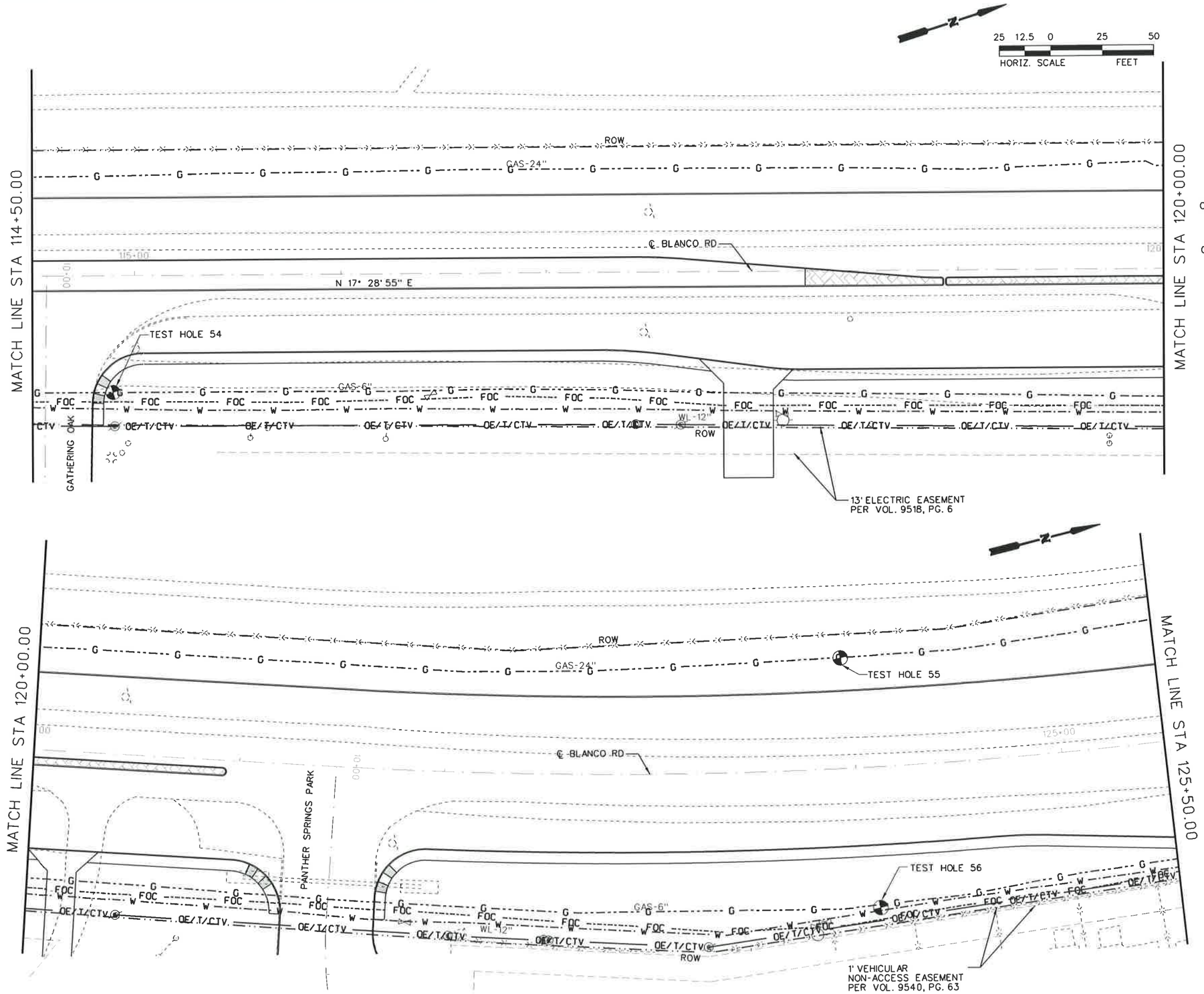

LEGEND

ELECTRIC	E	CPS
TRAFFIC SIGNAL	TS	TxDOT
GAS	G	CPS
FIBER OPTIC	FOC	AT&T
TELEPHONE	T	AT&T
WATER	W	BEXAR MET
WASTE WATER	WW	SAWS
OVERHEAD ELECTRIC TELEPHONE CABLE TV	OE/T/CTV	CPS/ AT&T/TIME WARNER
OVERHEAD ELECTRIC CABLE TV FIBER OPTIC TELEPHONE	OE/CTV/FOC/T	CPS/TIME WARNER/ AT&T/AT&T
TEL /SEWER MANHOLE		
ELECTRIC JUNCTION BOX		
LIGHT LUMINARE		
TRAFFIC CONTROL BOX		
POWER POLE		
TELEPHONE PEDESTAL		
WATER/GAS VALVE		
WATER METER		
FIRE HYDRANT		
GAS VENT		

The seal appearing on this document was authorized by Joseph A. Murphy, P.E. 89796

STATE OF TEXAS
JOSEPH A. MURPHY
89796
REGISTERED PROFESSIONAL ENGINEER

NO.	REVISION	BY	DATE

CP&Y Chiang, Patel & Yerby, Inc.

LTRA

400 N. St. Paul
Dallas, Texas 75201
(214)979-1144
Fax (214)979-2480

BEXAR COUNTY
PUBLIC WORKS DIVISION

F.M. 2696 (BLANCO ROAD)

EXISTING UTILITY LAYOUT

STA 114+50.00 TO STA 125+50.00

SHEET 11 OF 19

Designed: MG	STATE	BEXAR COUNTY FILE NUMBER	PLAN SET NO.
Checked: JM	TEXAS		497
Drawn: JA	COUNTY		OF
Checked: AM	BEXAR		842

p:\projects\8\blanco_rd_sue\sheets\6102CSRDUT11.050
12/6/2007
4:58:49 PM

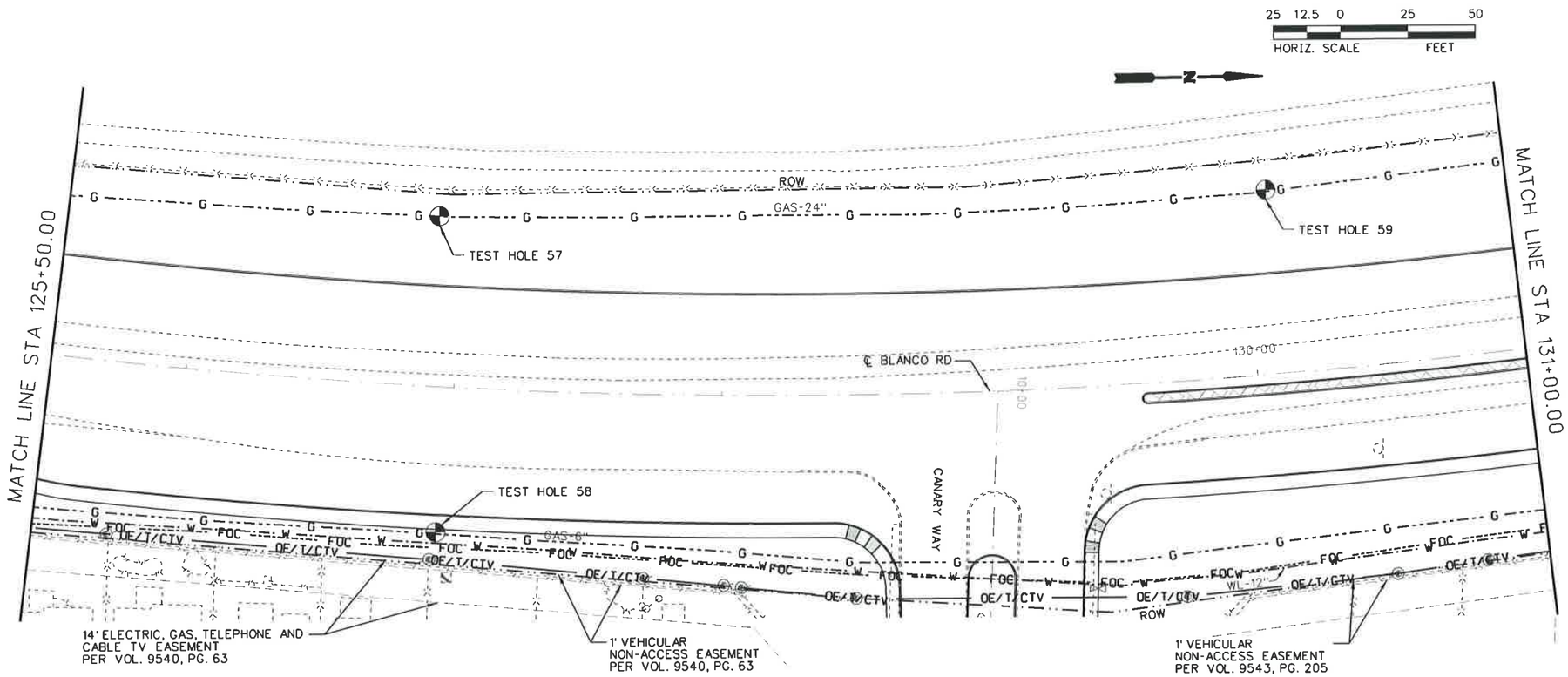

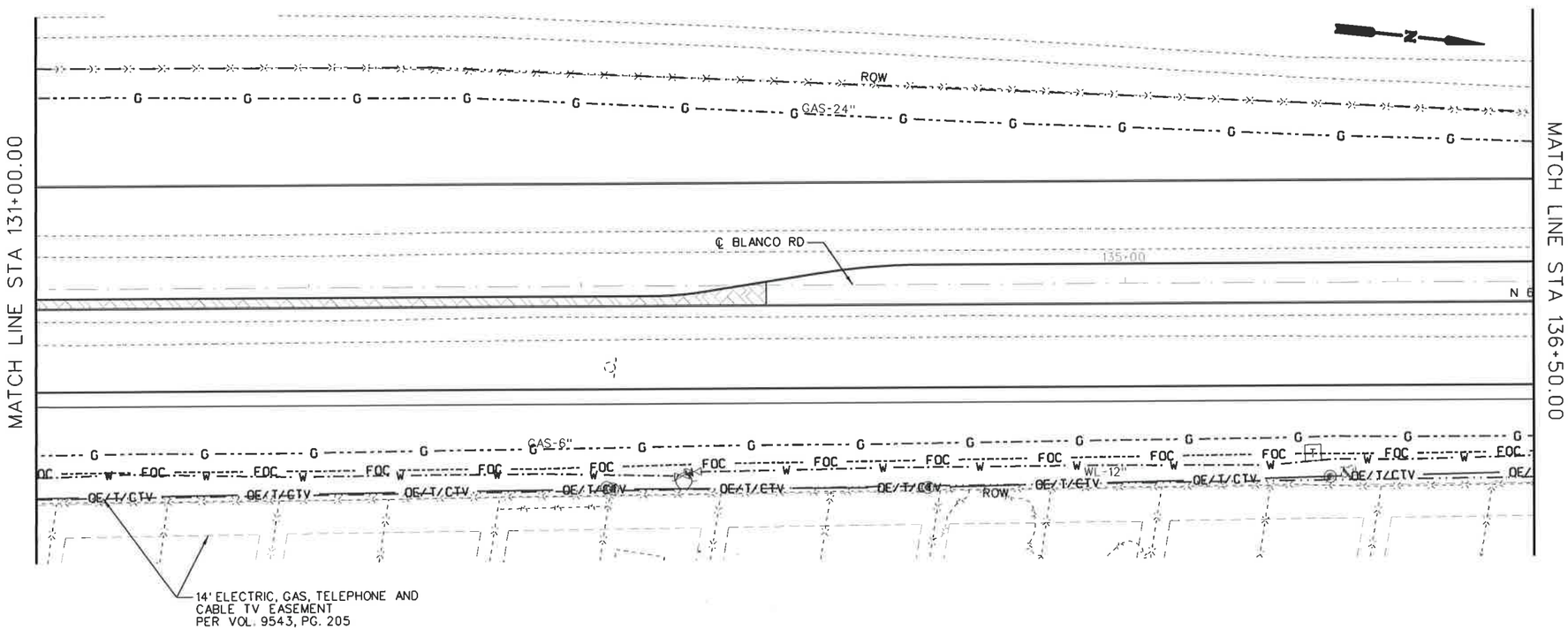

LEGEND

ELECTRIC	E	CPS
TRAFFIC SIGNAL	TS	TxDOT
GAS	G	CPS
FIBER OPTIC	FOC	AT&T
TELEPHONE	T	AT&T
WATER	W	BEXAR MET
WASTE WATER	WW	SAWS
OVERHEAD ELECTRIC TELEPHONE CABLE TV	OE/T/CTV	CPS/ AT&T/TIME WARNER
OVERHEAD ELECTRIC CABLE TV FIBER OPTIC TELEPHONE	OE/CTV/FOC/T	CPS/TIME WARNER/ AT&T/AT&T

TEL /SEWER MANHOLE
ELECTRIC JUNCTION BOX
LIGHT LUMINARE
TRAFFIC CONTROL BOX
POWER POLE
TELEPHONE PEDESTAL
WATER/GAS VALVE
WATER METER
FIRE HYDRANT
GAS VENT

The seal appearing on this document was authorized by Joseph A. Murphy, P.E. 89796

STATE OF TEXAS
JOSEPH A. MURPHY
89796
REGISTERED PROFESSIONAL ENGINEER

NO.	REVISION	BY	DATE

CP&Y Chiang, Patel & Yerby, Inc.

LTRA

400 N. St. Paul
Dallas, Texas 75201
(214)979-1144
Fax (214)979-2480

BEXAR COUNTY
PUBLIC WORKS DIVISION

F.M. 2696 (BLANCO ROAD)

EXISTING UTILITY LAYOUT

STA 125+50.00 TO STA 136+50.00

SHEET 12 OF 19

Designed: GM	STATE	BEXAR COUNTY FILE NUMBER	PLAN SET NO.	
Checked: JM	TEXAS		498	
Drawn: JA	COUNTY		OF	
Checked: AM	BEXAR		842	

p:\projects\blanco_rd_sus\sheets\6102CSROUT12.050
12/6/2007 4:58:51 PM

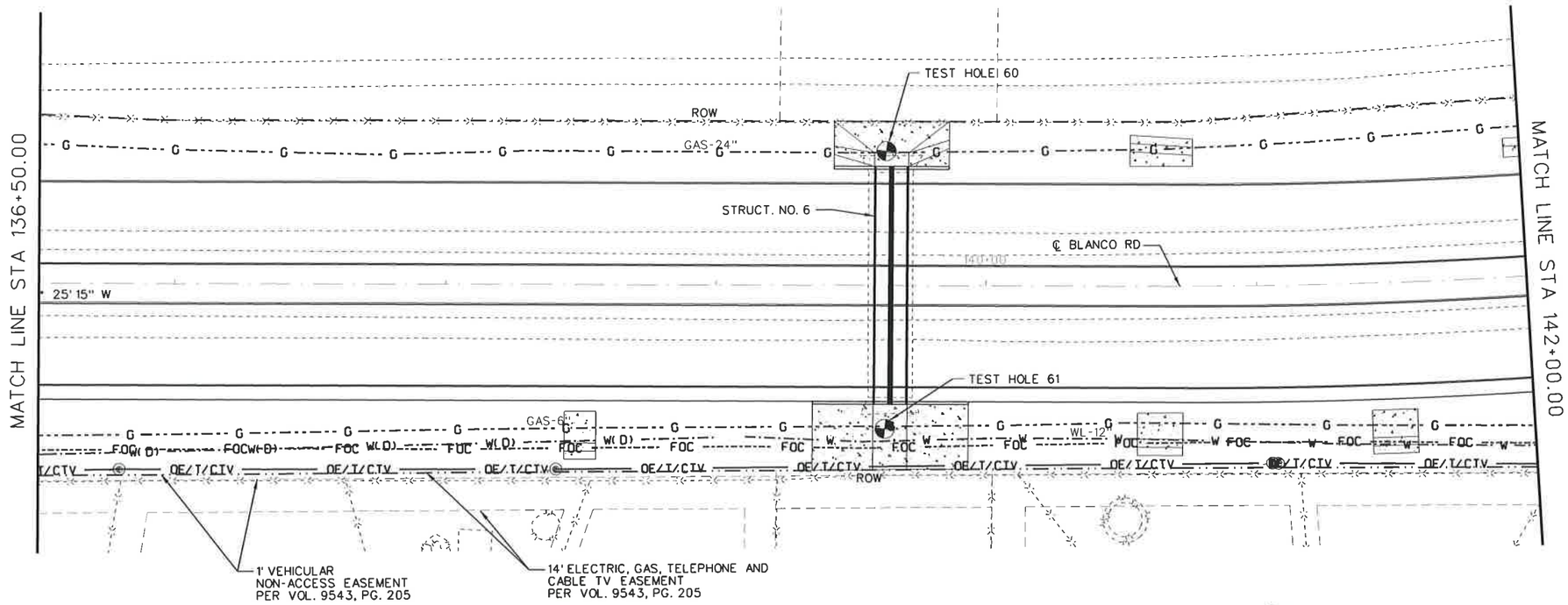

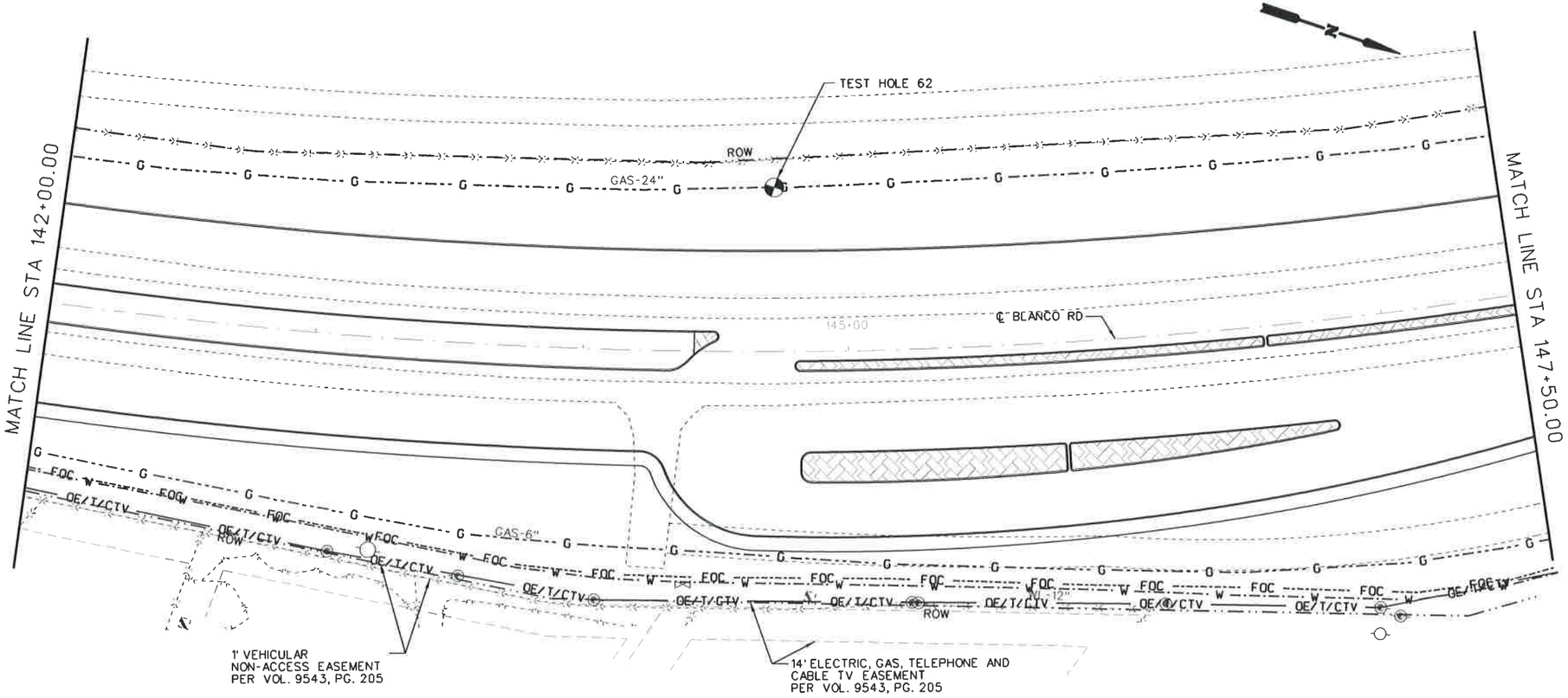

LEGEND

ELECTRIC	E	CPS
TRAFFIC SIGNAL	TS	TxDOT
GAS	G	CPS
FIBER OPTIC	FOC	AT&T
TELEPHONE	T	AT&T
WATER	W	BEXAR MET
WASTE WATER	WW	SAWS
OVERHEAD ELECTRIC TELEPHONE CABLE TV	OE/T/CTV	CPS/ AT&T/TIME WARNER
OVERHEAD ELECTRIC CABLE TV FIBER OPTIC TELEPHONE	OE/CTV/FOC/T	CPS/TIME WARNER/ AT&T/AT&T
TEL /SEWER MANHOLE		
ELECTRIC JUNCTION BOX		
LIGHT LUMINARE		
TRAFFIC CONTROL BOX		
POWER POLE		
TELEPHONE PEDESTAL		
WATER/GAS VALVE		
WATER METER		
FIRE HYDRANT		
GAS VENT		

The seal appearing on this document was authorized by Joseph A. Murphy, P.E. 89796

STATE OF TEXAS
JOSEPH A. MURPHY
89796
REGISTERED PROFESSIONAL ENGINEER

NO.	REVISION	BY	DATE

CP&Y Chiang, Patel & Yerby, Inc.

LTRA

400 N. St. Paul
Dallas, Texas 75201
(214)979-1144
Fax (214)979-2480

BEXAR COUNTY
PUBLIC WORKS DIVISION

F.M. 2696 (BLANCO ROAD)

EXISTING UTILITY LAYOUT

STA 136+50.00 TO STA 147+50.00

SHEET 13 OF 19

Designed: GM	STATE	BEXAR COUNTY FILE NUMBER	PLAN SET NO.	
Checked: JM	TEXAS		499	
Drawn: JA	COUNTY		OF	
Checked: AM	BEXAR		842	

p:\projects\8\blanco_rd_sue\sheets\6102CSROUT13.050
12/6/2007 4:58:54 PM

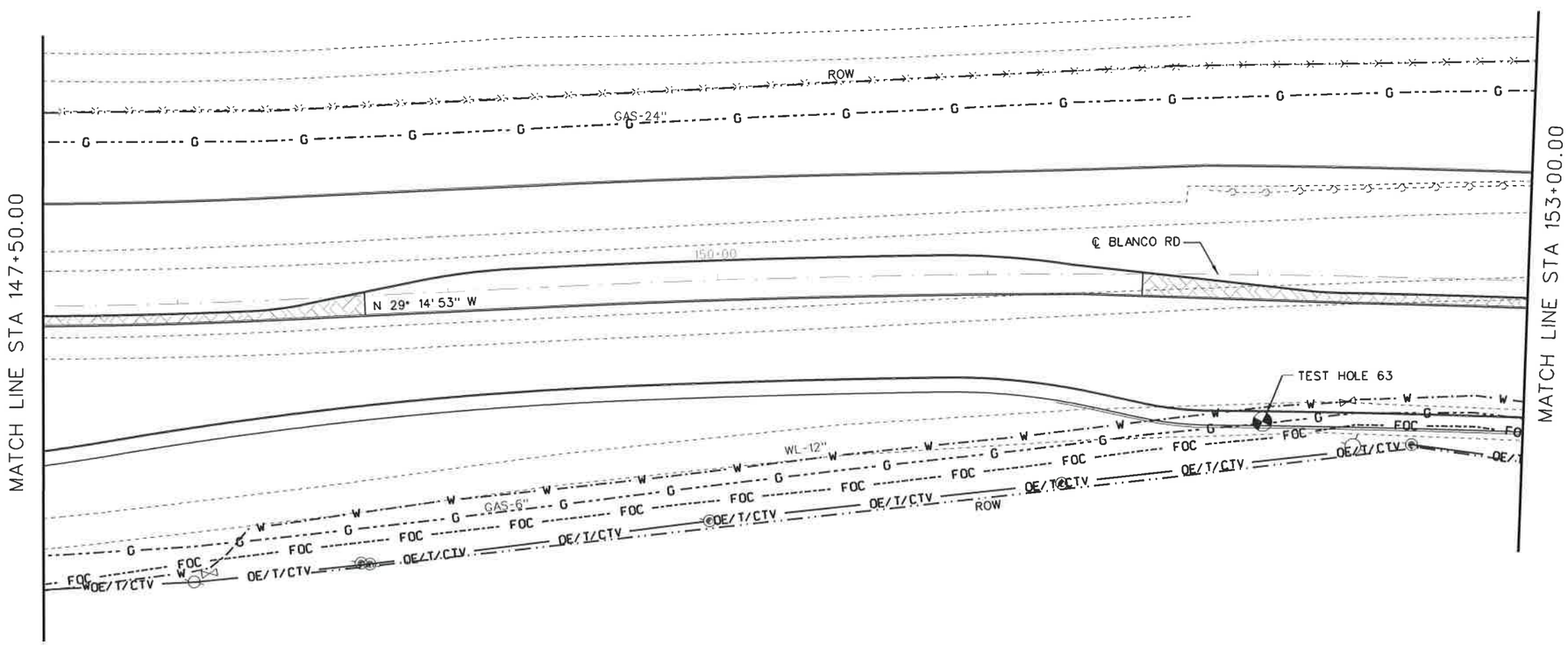

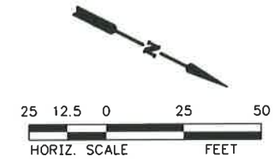

LEGEND

ELECTRIC	E	CPS
TRAFFIC SIGNAL	TS	TxDOT
GAS	G	CPS
FIBER OPTIC	FOC	AT&T
TELEPHONE	T	AT&T
WATER	W	BEXAR MET
WASTE WATER	WW	SAWS
OVERHEAD ELECTRIC TELEPHONE CABLE TV	OE/T/CTV	CPS/ AT&T/TIME WARNER
OVERHEAD ELECTRIC CABLE TV FIBER OPTIC TELEPHONE	OE/CTV/FOC/T	CPS/TIME WARNER/ AT&T/AT&T
TEL /SEWER MANHOLE		
ELECTRIC JUNCTION BOX		
LIGHT LUMINARE		
TRAFFIC CONTROL BOX		
POWER POLE		
TELEPHONE PEDESTAL		
WATER/GAS VALVE		
WATER METER		
FIRE HYDRANT		
GAS VENT		

The seal appearing on this document was authorized by Joseph A. Murphy, P.E. 89796

STATE OF TEXAS
JOSEPH A. MURPHY
89796
REGISTERED PROFESSIONAL ENGINEER

12-6-07

NO.	REVISION	BY	DATE

CP&Y Chiang, Patel & Yerby, Inc.

LTRA

400 N. St. Paul
Dallas, Texas 75201
(214)979-1144
Fax (214)979-2480

BEXAR COUNTY
PUBLIC WORKS DIVISION

F.M. 2696 (BLANCO ROAD)

EXISTING UTILITY LAYOUT

STA 147+50.00 TO STA 153+00.00

SHEET 14 OF 19

Designed: MG	STATE	BEXAR COUNTY FILE NUMBER	PLAN SET NO.	
Checked: JM	TEXAS		SHEET	
Drawn: JA	COUNTY		OF	
Checked: AM	BEXAR		842	

p:\projects\B\blanco_rd_sue\sheets\6102CSROUT14.050
12/6/2007 4:58:56 PM

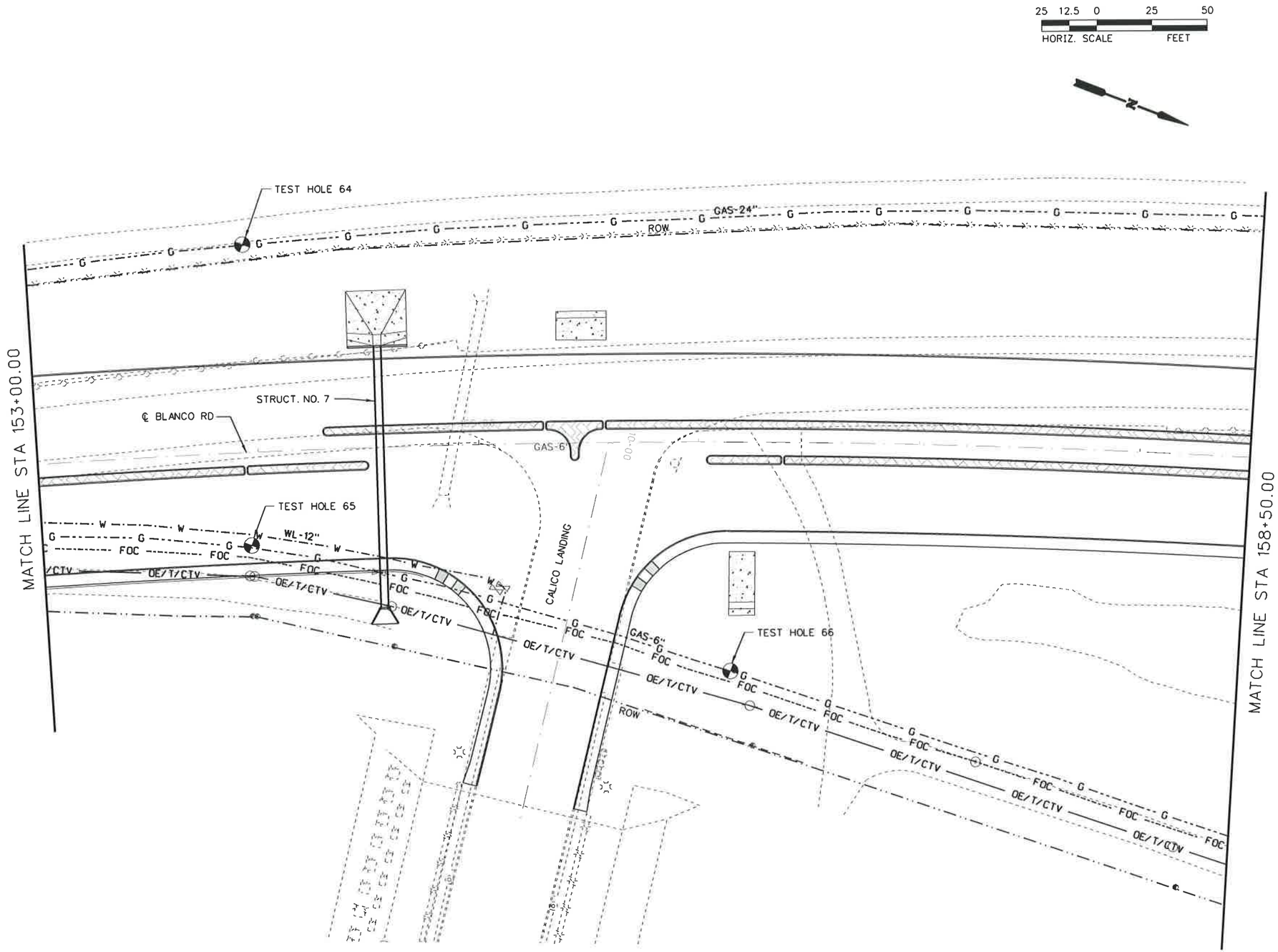

LEGEND

ELECTRIC	E	CPS
TRAFFIC SIGNAL	TS	TxDOT
GAS	G	CPS
FIBER OPTIC	FOC	AT&T
TELEPHONE	T	AT&T
WATER	W	BEXAR MET
WASTE WATER	WW	SAWS
OVERHEAD ELECTRIC TELEPHONE CABLE TV	OE/T/CTV	CPS/ AT&T/TIME WARNER
OVERHEAD ELECTRIC CABLE TV FIBER OPTIC TELEPHONE	OE/CTV/FOC/T	CPS/TIME WARNER/ AT&T/AT&T
TEL /SEWER MANHOLE		
ELECTRIC JUNCTION BOX		
LIGHT LUMINARE		
TRAFFIC CONTROL BOX		
POWER POLE		
TELEPHONE PEDESTAL		
WATER/GAS VALVE		
WATER METER		
FIRE HYDRANT		
GAS VENT		

The seal appearing on this document was authorized by Joseph A. Murphy, P.E. 89796

STATE OF TEXAS
JOSEPH A. MURPHY
89796
REGISTERED
PROFESSIONAL ENGINEER

NO.	REVISION	BY	DATE

CP&Y Chiang, Patel & Yerby, Inc.

LTRA

400 N. St. Paul
Dallas, Texas 75201
(214)979-1144
Fax (214)979-2480

BEXAR COUNTY
PUBLIC WORKS DIVISION

F.M. 2696 (BLANCO ROAD)

EXISTING UTILITY LAYOUT

STA 153+00.00 TO STA 158+50.00

SHEET 14A OF 19

Designed: MG	STATE	BEXAR COUNTY FILE NUMBER	PLAN SET NO.
Checked: JM	TEXAS		501
Drawn: JA	COUNTY		OF
Checked: AM	BEXAR		842

p:\projects\blanco_rd_sue\sheets\6102CSRDUT14A.050
12/6/2007
4:58:59 PM

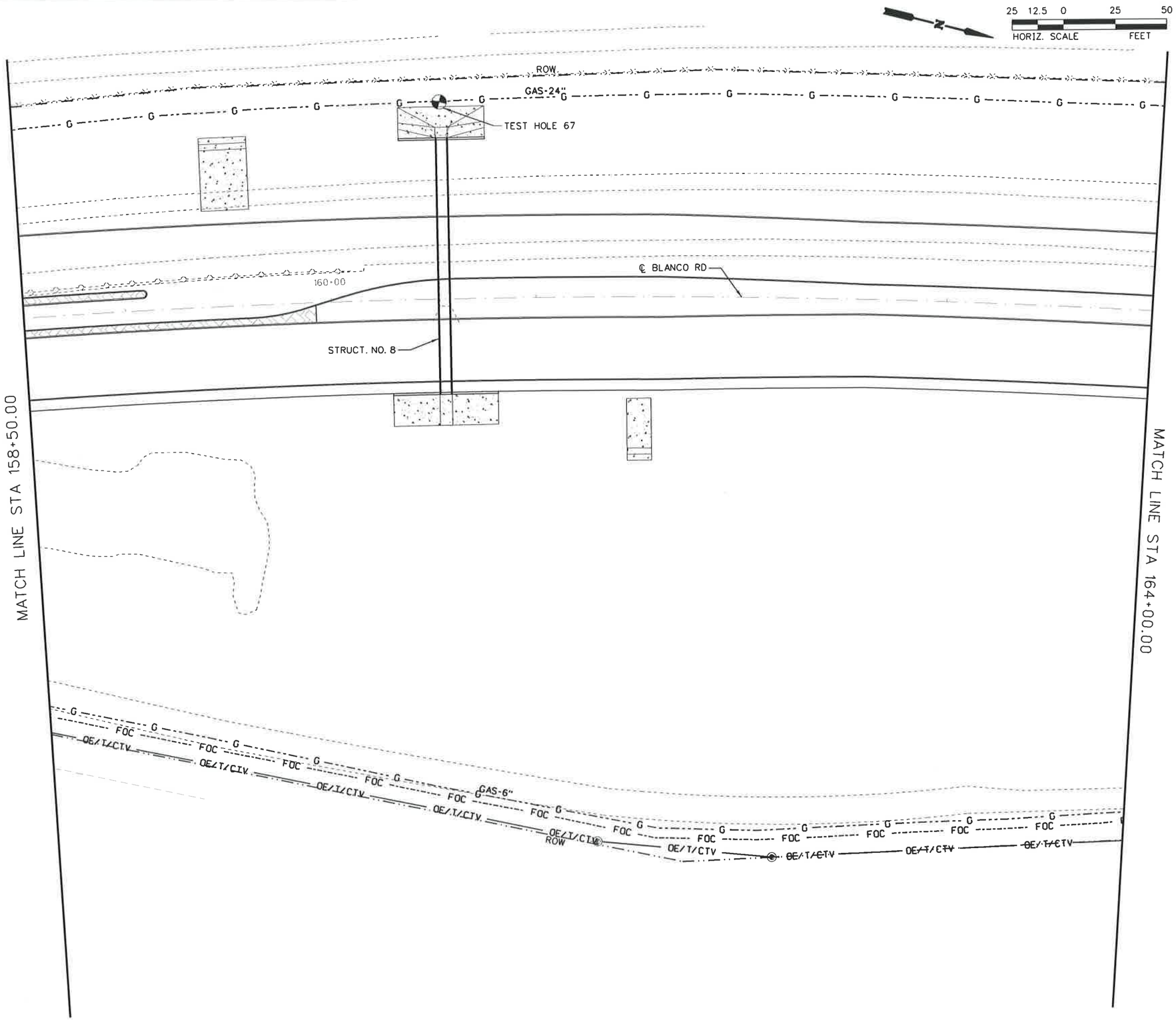

LEGEND

ELECTRIC	E	CPS
TRAFFIC SIGNAL	TS	TxDOT
GAS	G	CPS
FIBER OPTIC	FOC	AT&T
TELEPHONE	T	AT&T
WATER	W	BEXAR MET
WASTE WATER	WW	SAWS
OVERHEAD ELECTRIC TELEPHONE CABLE TV	OE/T/CTV	CPS/ AT&T/TIME WARNER
OVERHEAD ELECTRIC CABLE TV FIBER OPTIC TELEPHONE	OE/CTV/FOC/T	CPS/TIME WARNER/ AT&T/AT&T
TEL /SEWER MANHOLE		
ELECTRIC JUNCTION BOX		
LIGHT LUMINARE		
TRAFFIC CONTROL BOX		
POWER POLE		
TELEPHONE PEDESTAL		
WATER/GAS VALVE		
WATER METER		
FIRE HYDRANT		
GAS VENT		

The seal appearing on this document was authorized by Joseph A. Murphy, P.E. 89796

STATE OF TEXAS
JOSEPH A. MURPHY
89796
REGISTERED PROFESSIONAL ENGINEER

NO.	REVISION	BY	DATE

CP&Y Chiang, Patel & Yerby, Inc.

LTRA

400 N. St. Paul
Dallas, Texas 75201
(214)979-1144
Fax (214)979-2480

BEXAR COUNTY
PUBLIC WORKS DIVISION

F.M. 2696 (BLANCO ROAD)

EXISTING UTILITY LAYOUT

STA 158+50 TO STA 164+00.00

SHEET 15 OF 19

Designed: MG	STATE	BEXAR COUNTY FILE NUMBER	PLAN SET NO.
Checked: JM	TEXAS		502
Drawn: JA	COUNTY		OF
Checked: AM	BEXAR		842

p:\projects\blanco_rd_sue\sheets\6102CSRDUT15.050
12/6/2007
4:59:01 PM

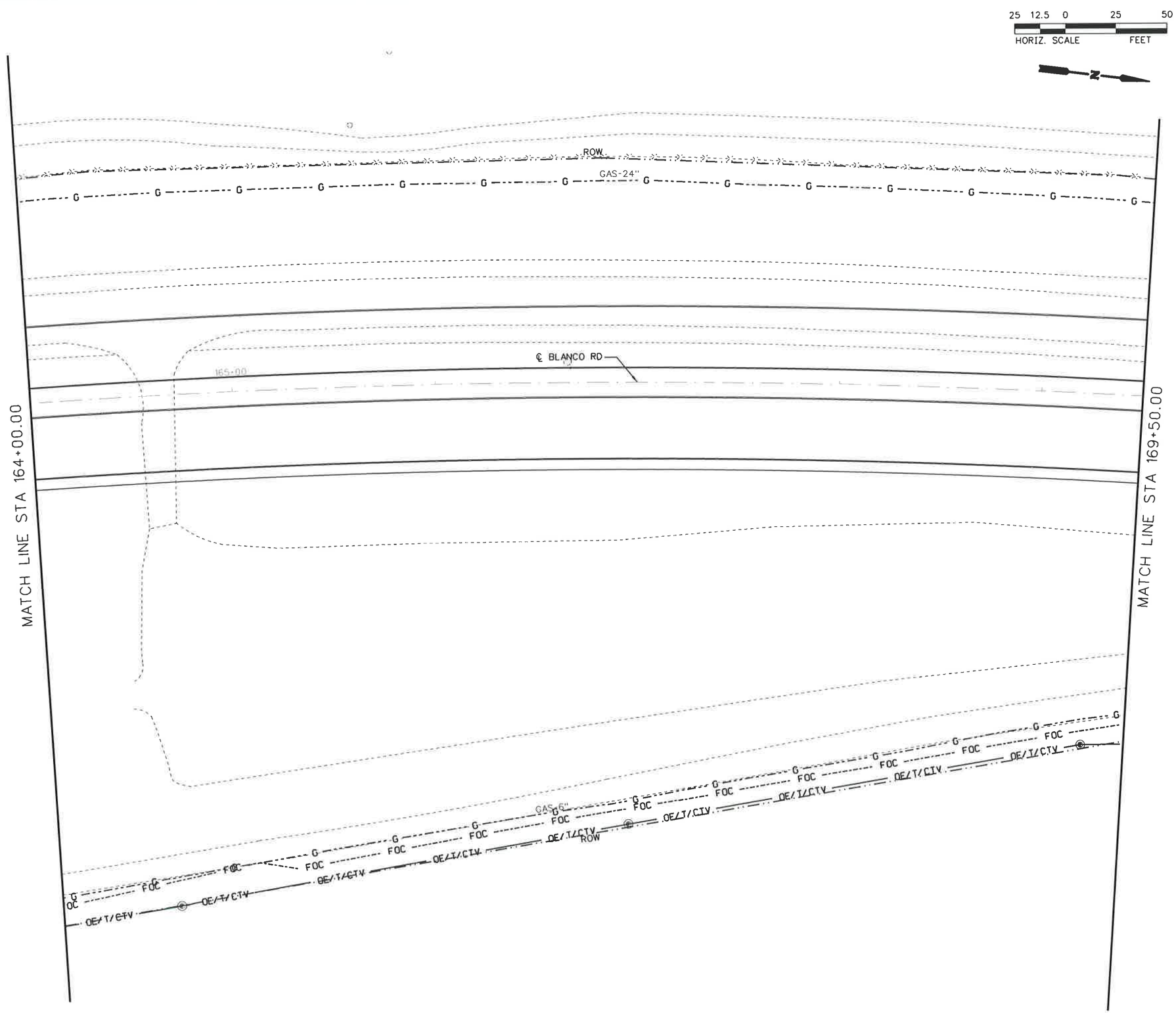

LEGEND

ELECTRIC	E	CPS
TRAFFIC SIGNAL	TS	TxDOT
GAS	G	CPS
FIBER OPTIC	FOC	AT&T
TELEPHONE	T	AT&T
WATER	W	BEXAR MET
WASTE WATER	WW	SAWS
OVERHEAD ELECTRIC TELEPHONE CABLE TV	OE/T/CTV	CPS/ AT&T/TIME WARNER
OVERHEAD ELECTRIC CABLE TV FIBER OPTIC TELEPHONE	OE/CTV/FOC/T	CPS/TIME WARNER/ AT&T/AT&T
TEL /SEWER MANHOLE		
ELECTRIC JUNCTION BOX		
LIGHT LUMINARE		
TRAFFIC CONTROL BOX		
POWER POLE		
TELEPHONE PEDESTAL		
WATER/GAS VALVE		
WATER METER		
FIRE HYDRANT		
GAS VENT		

The seal appearing on this document was authorized by Joseph A. Murphy, P.E. 89796

STATE OF TEXAS
JOSEPH A. MURPHY
89796
REGISTERED
PROFESSIONAL ENGINEER

12-6-07

NO.	REVISION	BY	DATE

CP&Y Chiang, Patel & Yerby, Inc.

LTRA

400 N. St. Paul
Dallas, Texas 75201
(214)979-1144
Fax (214)979-2480

BEXAR COUNTY
PUBLIC WORKS DIVISION

F.M. 2696 (BLANCO ROAD)

EXISTING UTILITY LAYOUT

STA 164+00 TO STA 169+50.00

SHEET 15A OF 19

Designed: GM	STATE	BEXAR COUNTY FILE NUMBER	PLAN SET NO.
Checked: JM	TEXAS		503
Drawn: JA	COUNTY		OF
Checked: AM	BEXAR		842

p:\projects\b\blanco_rd_sue\sheets\6102CSRDUT15A.050
12/6/2007 4:59:04 PM

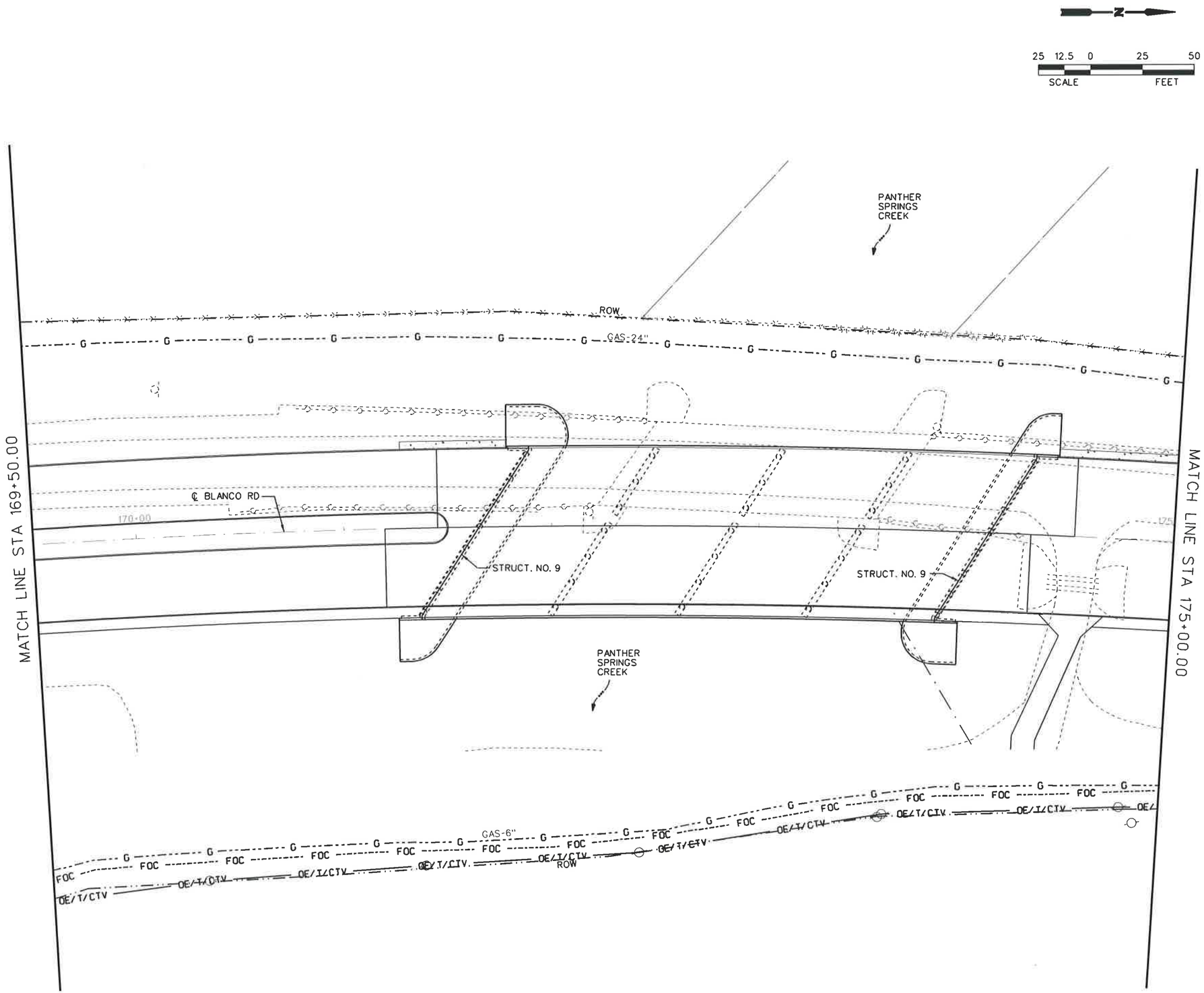

LEGEND

ELECTRIC	E	CPS
TRAFFIC SIGNAL	TS	TxDOT
GAS	G	CPS
FIBER OPTIC	FOC	AT&T
TELEPHONE	T	AT&T
WATER	W	BEXAR MET
WASTE WATER	WW	SAWS
OVERHEAD ELECTRIC TELEPHONE CABLE TV	OE/T/CTV	CPS/ AT&T/TIME WARNER
OVERHEAD ELECTRIC CABLE TV FIBER OPTIC TELEPHONE	OE/CTV/FOC/T	CPS/TIME WARNER/ AT&T/AT&T

TEL /SEWER MANHOLE
ELECTRIC JUNCTION BOX
LIGHT LUMINARE
TRAFFIC CONTROL BOX
POWER POLE
TELEPHONE PEDESTAL
WATER/GAS VALVE
WATER METER
FIRE HYDRANT
GAS VENT

The seal appearing on this document was authorized by Joseph A. Murphy, P.E. 89796

STATE OF TEXAS
JOSEPH A. MURPHY
89796
REGISTERED
PROFESSIONAL ENGINEER

NO.	REVISION	BY	DATE

CP&Y Chiang, Patel & Yerby, Inc.

LTRA 400 N. St. Paul
Dallas, Texas 75201
(214)979-1144
Fax (214)979-2480

BEXAR COUNTY
PUBLIC WORKS DIVISION

F.M. 2696 (BLANCO ROAD)

EXISTING UTILITY LAYOUT

STA 169+50.00 TO STA 175+00.00

SHEET 16 OF 19

Designed: MG	STATE	BEXAR COUNTY FILE NUMBER	PLAN SET NO. 604
Checked: JM	TEXAS		OF
Drawn: JA	COUNTY		842
Checked: AM	BEXAR		

p:\projects\b\blanco_rd_sue\sheets\6102CSROUT16.050
12/6/2007 5:03:37 PM

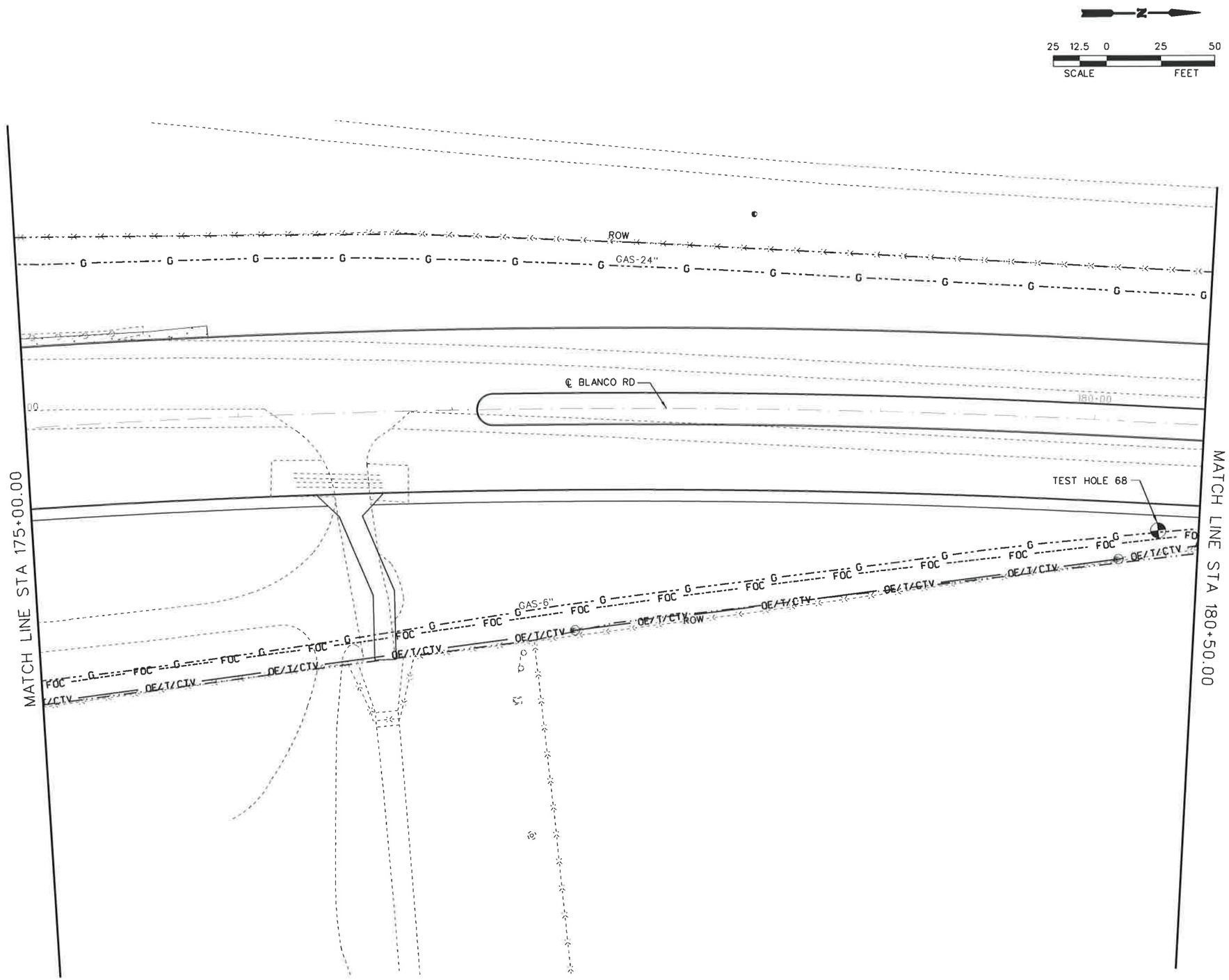

LEGEND

ELECTRIC	E	CPS
TRAFFIC SIGNAL	TS	TxDOT
GAS	G	CPS
FIBER OPTIC	FOC	AT&T
TELEPHONE	T	AT&T
WATER	W	BEXAR MET
WASTE WATER	WW	SAWS
OVERHEAD ELECTRIC TELEPHONE CABLE TV	OE/T/CTV	CPS/ AT&T/TIME WARNER
OVERHEAD ELECTRIC CABLE TV FIBER OPTIC TELEPHONE	OE/CTV/FOC/T	CPS/TIME WARNER/ AT&T/AT&T

TEL /SEWER MANHOLE
ELECTRIC JUNCTION BOX
LIGHT LUMINARE
TRAFFIC CONTROL BOX
POWER POLE
TELEPHONE PEDESTAL
WATER/GAS VALVE
WATER METER
FIRE HYDRANT
GAS VENT

The seal appearing on this document was authorized by Joseph A. Murphy, P.E. 89796

STATE OF TEXAS
JOSEPH A. MURPHY
89796
REGISTERED PROFESSIONAL ENGINEER

NO	REVISION	BY	DATE

CP&Y Chiang, Patel & Yerby, Inc.

LTRA

400 N. St. Paul
Dallas, Texas 75201
(214)979-1144
Fax (214)979-2480

BEXAR COUNTY
PUBLIC WORKS DIVISION

F.M. 2696 (BLANCO ROAD)

EXISTING UTILITY LAYOUT

STA 175+00.00 TO STA 180+50.00

SHEET 16A OF 19

Designed: MG	STATE	BEXAR COUNTY FILE NUMBER	PLAN SET NO.
Checked: JM	TEXAS		504A
Drawn: JA	COUNTY		OF
Checked: AM	BEXAR		842

p:\projects\B\blanco_rd_sue\sheets\6102CSRDUT16A.050
12/6/2007 4:59:09 PM

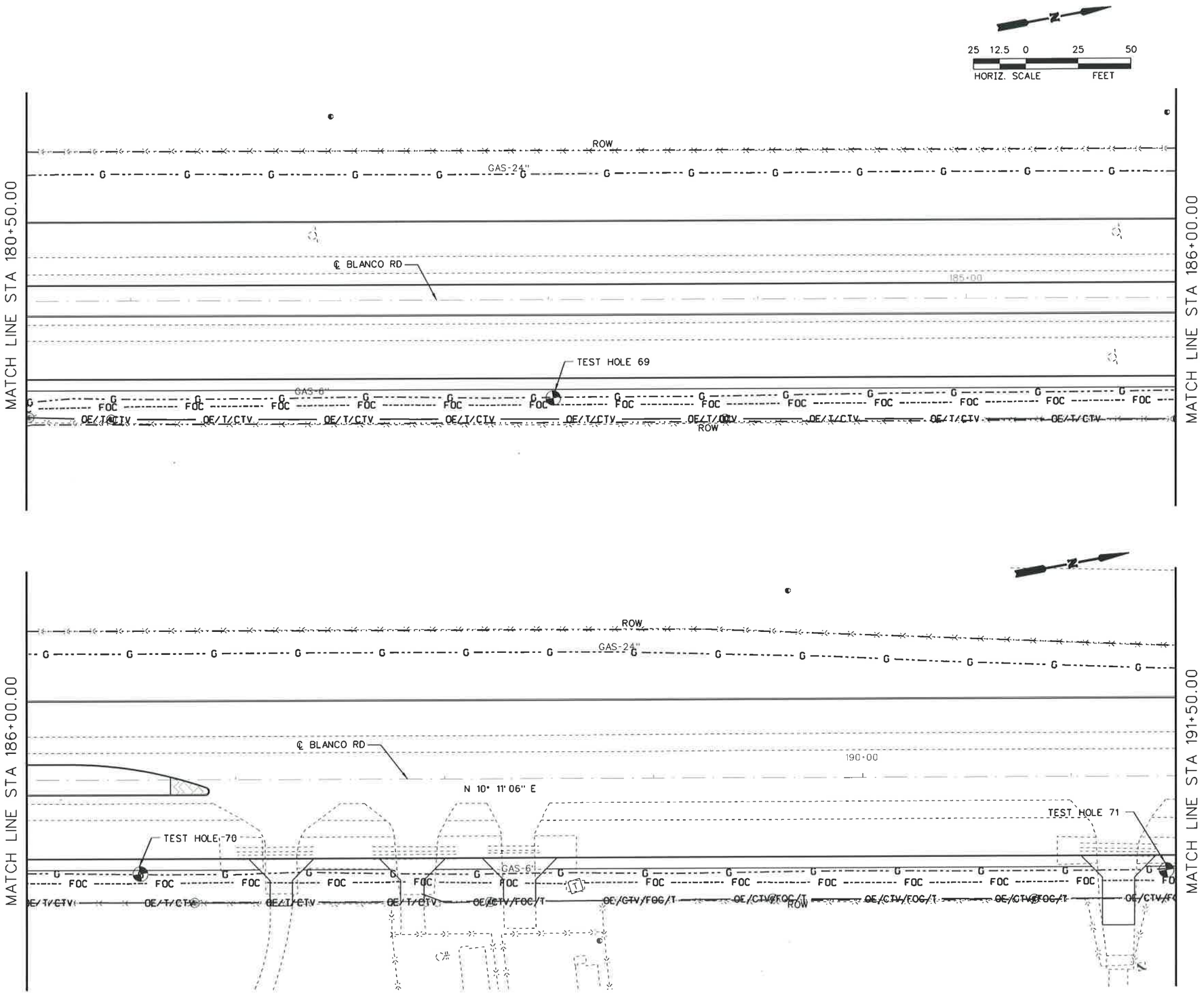

LEGEND

ELECTRIC	E	CPS
TRAFFIC SIGNAL	TS	TxDOT
GAS	G	CPS
FIBER OPTIC	FOC	AT&T
TELEPHONE	T	AT&T
WATER	W	BEXAR MET
WASTE WATER	WW	SAWS
OVERHEAD ELECTRIC TELEPHONE CABLE TV	OE/T/CTV	CPS/ AT&T/TIME WARNER
OVERHEAD ELECTRIC CABLE TV FIBER OPTIC TELEPHONE	OE/CTV/FOC/T	CPS/TIME WARNER/ AT&T/AT&T

TEL /SEWER MANHOLE
ELECTRIC JUNCTION BOX
LIGHT LUMINARE
TRAFFIC CONTROL BOX
POWER POLE
TELEPHONE PEDESTAL
WATER/GAS VALVE
WATER METER
FIRE HYDRANT
GAS VENT

The seal appearing on this document was authorized by Joseph A. Murphy, P.E. 89796

STATE OF TEXAS
JOSEPH A. MURPHY
89796
REGISTERED
PROFESSIONAL ENGINEER

12-6-07

NO.	REVISION	BY	DATE

CP&Y Chiang, Patel & Yerby, Inc.

LTRA

400 N. St. Paul
Dallas, Texas 75201
(214)979-1144
Fax (214)979-2480

BEXAR COUNTY
PUBLIC WORKS DIVISION

F.M. 2696 (BLANCO ROAD)

EXISTING UTILITY LAYOUT

STA 180+50.00 TO STA 191+50.00

SHEET 17 OF 19

Designed: MG	STATE	BEXAR COUNTY FILE NUMBER	PLAN SET NO. 504B
Checked: JM	TEXAS		
Drawn: JA	COUNTY		OF 842
Checked: AM	BEXAR		

p:\projects\8\blanco_rd_sus\sheets\6102CSRDUT17.050
12/6/2007 5:07:08 PM

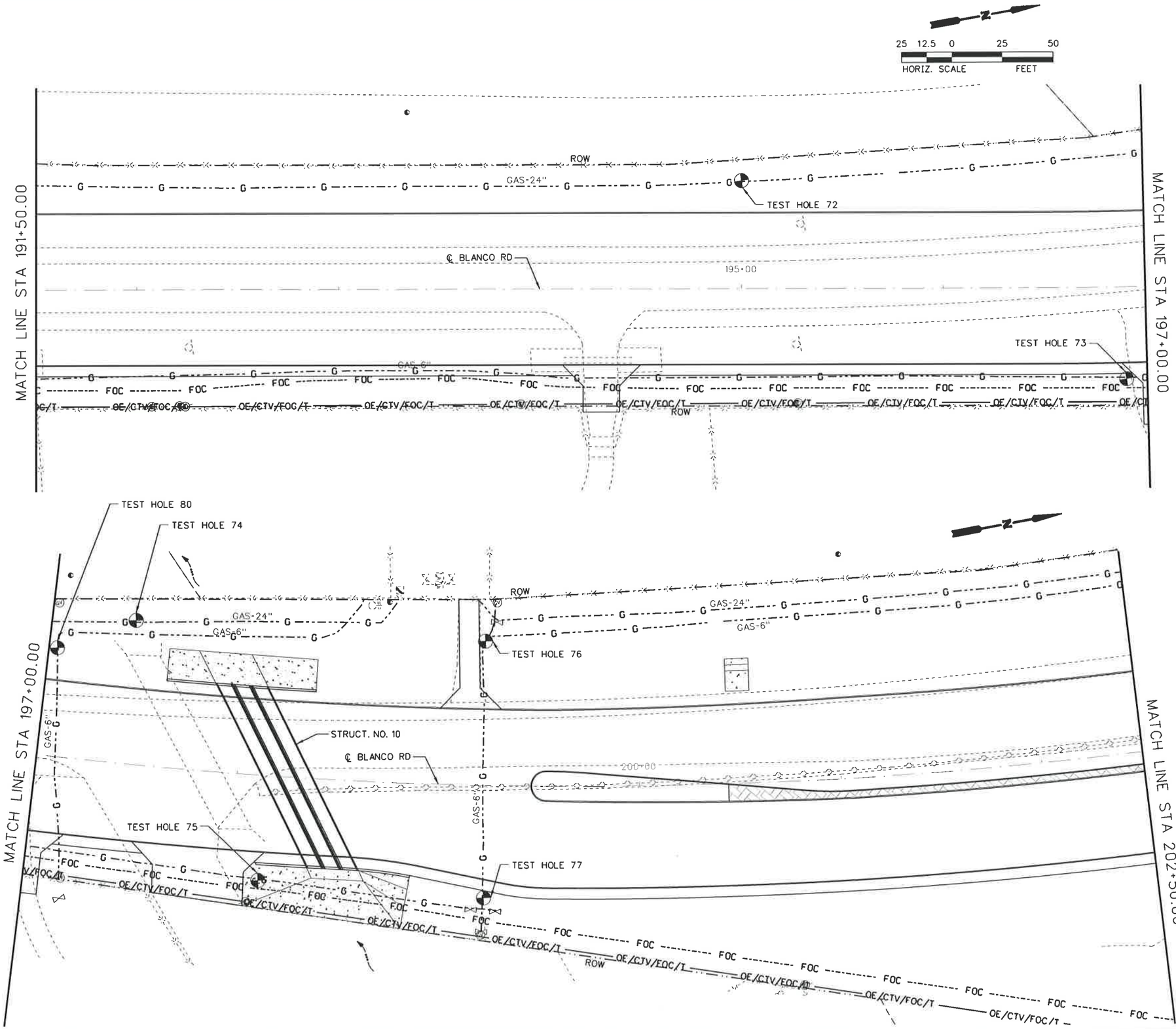

LEGEND

ELECTRIC	E	CPS
TRAFFIC SIGNAL	TS	TxDOT
GAS	G	CPS
FIBER OPTIC	FOC	AT&T
TELEPHONE	T	AT&T
WATER	W	BEXAR MET
WASTE WATER	WW	SAWS
OVERHEAD ELECTRIC TELEPHONE CABLE TV	OE/T/CTV	CPS/ AT&T/TIME WARNER
OVERHEAD ELECTRIC CABLE TV FIBER OPTIC TELEPHONE	OE/CTV/FOC/T	CPS/TIME WARNER/ AT&T/AT&T

TEL /SEWER MANHOLE
ELECTRIC JUNCTION BOX
LIGHT LUMINARE
TRAFFIC CONTROL BOX
POWER POLE
TELEPHONE PEDESTAL
WATER/GAS VALVE
WATER METER
FIRE HYDRANT
GAS VENT

The seal appearing on this document was authorized by Joseph A. Murphy, P.E. 89796

STATE OF TEXAS
JOSEPH A. MURPHY
89796
REGISTERED PROFESSIONAL ENGINEER

12-6-07

NO.	REVISION	BY	DATE

CP&Y Chiang, Patel & Yerby, Inc.

LTRA

400 N. St. Paul
Dallas, Texas 75201
(214)979-1144
Fax (214)979-2480

BEXAR COUNTY
PUBLIC WORKS DIVISION

F.M. 2696 (BLANCO ROAD)

EXISTING UTILITY LAYOUT

STA 191+50.00 TO STA 202+50.00

SHEET 18 OF 19

Designed: MG	STATE	BEXAR COUNTY FILE NUMBER	PLAN SET NO.
Checked: JM	TEXAS		504C
Drawn: JA	COUNTY		OF
Checked: AM	BEXAR		842

p:\projects\B\blanco_rd_sue\sheets\6302SRDUT18.050
12/6/2007 4:59:14 PM

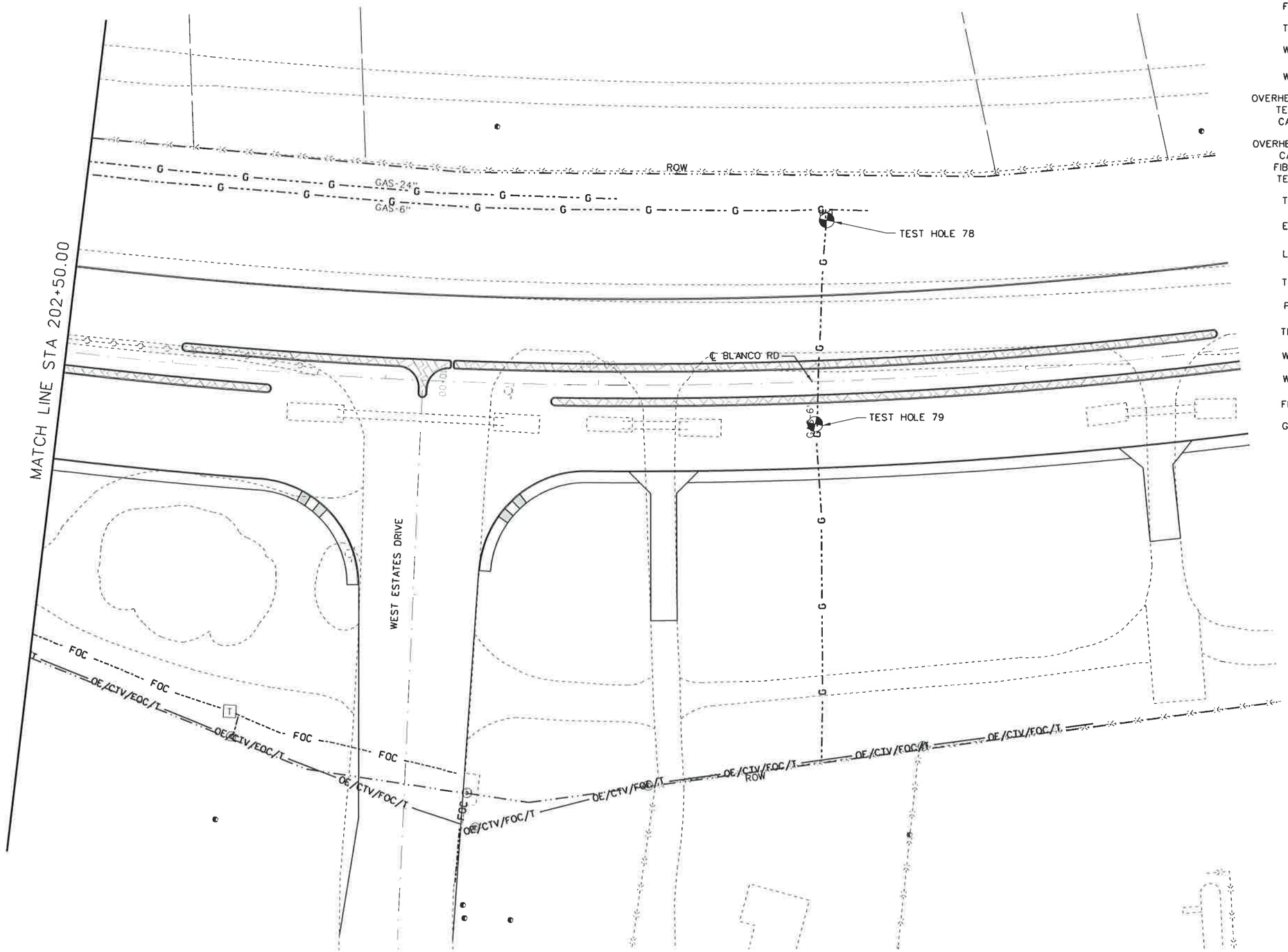

LEGEND

ELECTRIC	E	CPS
TRAFFIC SIGNAL	TS	TxDOT
GAS	G	CPS
FIBER OPTIC	FOC	AT&T
TELEPHONE	T	AT&T
WATER	W	BEXAR MET
WASTE WATER	WW	SAWS
OVERHEAD ELECTRIC TELEPHONE CABLE TV	OE/T/CTV	CPS/ AT&T/TIME WARNER
OVERHEAD ELECTRIC CABLE TV FIBER OPTIC TELEPHONE	OE/CTV/FOC/T	CPS/TIME WARNER/ AT&T/AT&T

TEL /SEWER MANHOLE
ELECTRIC JUNCTION BOX
LIGHT LUMINARE
TRAFFIC CONTROL BOX
POWER POLE
TELEPHONE PEDESTAL
WATER/GAS VALVE
WATER METER
FIRE HYDRANT
GAS VENT

The seal appearing on this document was authorized by Joseph A. Murphy, P.E. 89796

STATE OF TEXAS
JOSEPH A. MURPHY
89796
REGISTERED PROFESSIONAL ENGINEER

NO.	REVISION	BY	DATE

Chiang, Patel & Yerby, Inc.
400 N. St. Paul
Dallas, Texas 75201
(214)979-1144
Fax (214)979-2480

BEXAR COUNTY
PUBLIC WORKS DIVISION

F.M. 2696 (BLANCO ROAD)

EXISTING UTILITY LAYOUT

STA 202+50.00 TO STA 208+00.00

SHEET 19 OF 19

Designed: MG	STATE	BEXAR COUNTY FILE NUMBER	PLAN SET NO. 505
Checked: JM	TEXAS		
Drawn: JA	COUNTY		OF 842
Checked: AM	BEXAR		

p:\projects\8\blanco_rd_sue\sheets\6102CSROUT19.050
12/6/2007 5:03:40 PM

AS-BUILT/PLAN OF RECORD
SUBMITTED JULY 2011

THESE DOCUMENTS HAVE BEEN PREPARED BASED ON INFORMATION PROVIDED BY OTHERS. THOSE RELYING ON THIS RECORD DOCUMENT ARE ADVISED TO OBTAIN INDEPENDENT VERIFICATION OF ITS ACCURACY BEFORE APPLYING IT FOR ANY PURPOSE.

PLANS OF PROPOSED WATER MAIN REPLACEMENT

F.M. 2696 (BLANCO ROAD)

GLADE CROSSING TO WEST OAK ESTATES

BexarMet
WATER DISTRICT

4" D.I.R.O.	6" D.I.M.J.-T/S	8" D.I.M.J.-T/S		12" D.I.M.J.-T/S		16" D.I.M.J.-T/S			24" D.I.M.J.-T/S
XX	9	16	112	3	4	4	12	245	14.5
XX	6	81	30	19	3	14	36	5	60
XX	14	5	68	100	4	120	123	5	4
	9	8	2	16.5	13	17	62	10	14
	6	25	2	3	4	5	6	18	9
	XX	2	4	4	7	23	3	3.5	15
	XX	142	11	4.5	158	40	11.5	104	6
	XX	89	7	2	91	17	6	19	127
	5	5	2	3.5	101	6	2.5	4	8
	5	5	5	5	12	8	2.5	2.5	13
	8	2	13	6	5	4	32	4	8
	XX	88	3	113	5.5	141	2.5	32	4
		159	1.5	4	5	3	3	233	5
		2	3	4	7	111	12	23	4.5
		2	8	8	8.5	3	11	4	7
		18	14	3	4	36	101	4	9
		18	3	4	3.5	32	15	4	308
		4	1.5	270	3	15	15	62	
		20	5		XX	517	673	10	
		4	2.5	XXXX		90	5	4	
		32	4.5			3136			
		45	1.5						
		2	2.5						
		4	3						
		7.5	3						
		4	7.5						
		3							
		1112							

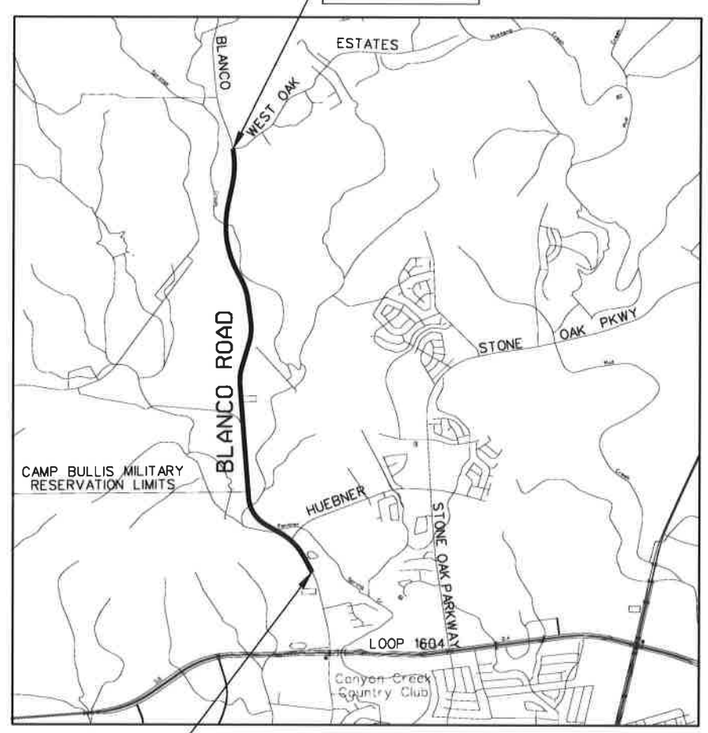

THE SEAL THAT ORIGINALLY APPEARED ON THIS DOCUMENT WAS AUTHORIZED BY: HUGO CABRERA TEXAS P. E. NO.: 98245 ON DATE 12/19/07 ALTERATION ON A SEALED DOCUMENT WITHOUT PROPER NOTIFICATION OF THE RESPONSIBLE ENGINEER IS AN OFFENSE UNDER THE TEXAS ENGINEERING PRACTICE ACT

NO.	REVISION	BY	DATE

BexarMet WATER DISTRICT

CP&Y Chiang, Patel & Yerby, Inc.

BEXAR COUNTY
PUBLIC WORKS DIVISION

F.M. 2696 (BLANCO ROAD)

TITLE SHEET

SHEET 1 OF 1

Designed:	RG	STATE	BEXAR COUNTY FILE NUMBER	PLAN SET NO.
Checked:	HC	TEXAS		UTTS01
Drawn:	RG	COUNTY		OF
Checked:	HC	BEXAR		SHEETTOTAL

pw:/Active Projects/BEX61102/8.005 Blanco Road Drawings/8.10 Cut Sheets/8.1.17 Bexar Met/61102CSUTG101.dgn

GENERAL NOTES

1. LOCATIONS OF EXISTING WATER LINES SHOWN ON THE DRAWINGS ARE APPROXIMATE ONLY. THE CONTRACTOR PRIOR TO CONSTRUCTION MUST VERIFY ACTUAL LOCATIONS AND DEPTHS AND THE CONTRACTOR SHALL BE RESPONSIBLE FOR PROTECTION OF ALL WATER LINES DURING CONSTRUCTION. LOCATIONS FOR UTILITIES OTHER THAN WATER LINES SHALL BE TAKEN FROM PUBLIC WORKS CONSTRUCTION DOCUMENTS OR OTHER UTILITY PLANS AVAILABLE.

2. BIDDERS ARE NOTIFIED TO MAKE SUBSURFACE INVESTIGATIONS WHERE THE AREA IS KNOWN TO CONTAIN POOR SOILS. ALL EXCAVATION SHALL BE UNCLASSIFIED REGARDLESS OF MATERIAL ENCOUNTERED. NO ADDITIONAL PAYMENT WILL BE MADE FOR WATER, SAND, GRAVEL, OR OTHER UNSTABLE CONDITIONS ENCOUNTERED IN THE EXCAVATION. NO ADDITIONAL PAYMENT WILL BE MADE FOR ROCK EXCAVATION.

3. THE CONTRACTOR SHALL PROTECT ALL OPEN EXCAVATIONS AND EQUIPMENT FROM THE CHILDREN, PEDESTRIANS, AND VEHICLES IN THE AREA BY PROVIDING, INSTALLING AND MAINTAINING FENCING, BARRICADES, OR OTHER PROTECTIVE SYSTEMS AS REQUIRED BY BEXAR METROPOLITAN WATER DISTRICT. NO SEPARATE PAYMENT WILL BE MADE.

4. THE CONTRACTOR SHALL BE RESPONSIBLE FOR THE RESTORATION OF ALL FENCES, CONCRETE ISLANDS, OR CONCRETE DRIVEWAYS IN THE WORK AREA TO THEIR ORIGINAL OR BETTER CONDITION PRIOR TO COMPLETION OF THE CONTRACT. THIS SHALL APPLY TO ALL OF THE MENTIONED ITEMS WHETHER THEY ARE SHOWN ON THE PLAN OR NOT (NO SEPARATE PAY ITEM).

5. THE CONTRACTOR MUST CONTACT THE CITY'S CONSTRUCTION INSPECTOR FOR THE CITY OF JURISDICTION 48 HOURS IN ADVANCE (NOT INCLUDING WEEKENDS) OF ANY MINOR STREET CLOSURE. THE ADVANCE TIME NOTICE IS NECESSARY TO INSTALL ADVISORY SIGNS AND GIVE MOTORISTS NOTICE OF THE STREET CLOSURE. THE CONSTRUCTION INSPECTOR AFTER BEING NOTIFIED WILL CONTACT THE TRAFFIC ENGINEERING OFFICE TO MAKE THE NECESSARY ARRANGEMENTS.

6. THE CONTRACTOR SHALL BE RESPONSIBLE FOR PROVIDING SAFE ACCESS ACCOMMODATIONS FOR SCHOOL CHILDREN AND PEDESTRIANS.

7. ALL CONSTRUCTION, UNLESS OTHERWISE NOTED BELOW, SHALL CONFORM TO THE BEXARMET WATER DISTRICT (BMWD), SAN ANTONIO, TEXAS STANDARD SPECIFICATIONS FOR WATER WORKS CONSTRUCTION AND IS SUBJECT TO INSPECTIONS AND APPROVAL BY BEXARMET WATER DISTRICT (BMWD).

8. THE CONTRACTOR SHALL NOT PLACE ANY WASTE MATERIALS IN THE 100-YEAR FLOODPLAIN WITHOUT FIRST OBTAINING AN APPROVED FLOODPLAIN DEVELOPMENT PERMIT AS REQUIRED FROM THE U.S. CORP OF ENGINEERS.

9. DETOUR ROUTING AROUND WORK ACTIVITIES, MAINTENANCE OF DETOUR SIGNS, AND FLAGMEN ARE THE CONTRACTOR'S RESPONSIBILITY. NO SEPARATE PAYMENT WILL BE MADE.

10. THE CONTRACTOR SHALL PROVIDE AND MAINTAIN SAFE ACCESS FOR THE DELIVERY OF MAIL BY THE U.S. POSTAL SERVICE.

11. THE CONTRACTOR SHALL PROVIDE AND MAINTAIN SAFE ACCESS TO RESIDENCES AND BUSINESSES AS REQUIRED BY BEXAR MET.

12. ALL TEMPORARY TRAFFIC CONTROL DEVICES, ETC. SHALL BE PROVIDED BY THE CONTRACTOR WITHOUT DIRECT PAYMENT, UNLESS OTHERWISE NOTED OR STATED.

13. THE CONTRACTOR SHALL CALL BEXARMET WATER DISTRICT INSPECTION DEPARTMENT 48 HOURS PRIOR TO EXCAVATION AT 354-6537.

14. THE CONTRACTOR IS TO CONTACT THE UTILITY COMPANY LOCATOR 48 HOURS PRIOR TO EXCAVATION. THE CONTRACTOR HAS THE RESPONSIBILITY TO PROTECT AND SUPPORT ALL UTILITY LINES DURING CONSTRUCTION. CONTRACTOR ASSUMES ALL LIABILITY IF HE FAILS TO CARRY OUT THIS RESPONSIBILITY.

15. THE CONTRACTOR SHALL VERIFY THE EXACT LOCATION OF UNDERGROUND UTILITIES AND DRAINAGE STRUCTURES WHETHER SHOWN ON PLANS OR NOT.

A. SANITARY SEWER	704-7160	(SAN ANTONIO WATER SYSTEM)
B. STORM DRAIN	207-8048	(CITY OF SAN ANTONIO)
C. TELEPHONE	1-800-545-6005	(SOUTHWESTERN BELL)
D. GAS	1-800-545-6005	(CITY PUBLIC SERVICE)
E. ELECTRIC	1-800-545-6005	(CITY PUBLIC SERVICE)
F. CABLE TV	1-800-545-6005	(TIME WARNER CABLE)
G. TRAFFIC SIGNAL CABLE	207-7765	(CITY OF SAN ANTONIO TRAFFIC SIGNAL CABLE)
H. WATER	354-6500	(BEXARMET WATER DISTRICT)

16. THE CONTRACTOR SHALL CALL BEXAR COUNTY DEPT. OF PUBLIC WORKS 48 HOURS PRIOR TO EXCAVATION AT 335-6700 FOR PROJECTS WITHIN BEXAR COUNTY JURISDICTION.

17. THE CONTRACTOR SHALL CALL CITY SIDEWALK AND TRENCHING DIVISION 48 HOURS PRIOR TO EXCAVATION AT 207-2800 FOR PROJECTS WITHIN CITY OF SAN ANTONIO JURISDICTION.

18. DUE TO FEDERAL REGULATION TITLE 49, PART 192.181, CPS MUST MAINTAIN ACCESS TO GAS VALVES AT ALL TIMES. THE CONTRACTOR MUST PROTECT AND WORK AROUND ANY GAS VALVES THAT ARE IN THE PROJECT AREA.

19. WHENEVER POWER POLES ARE ADJACENT TO THE PROPOSED WATER LINE, THE CONTRACTOR SHALL PROVIDE PROPER SHORING OR OTHER SUITABLE SUPPORT DURING CONSTRUCTION OF THE WATER LINE. THE UTILITY COMPANY MAINTENANCE DEPARTMENT MUST APPROVE SHORING PLAN.

20. WATER MAINS SHALL BE INSTALLED WITH A MINIMUM OF 4-FT. COVER AND IT IS THE RESPONSIBILITY OF THE CONTRACTOR TO PREVENT CONFLICTS WITH PUBLIC WORKS CONSTRUCTION.

21. FIRE HYDRANTS SHALL BE 5 FT. BURY UNLESS OTHERWISE SPECIFIED AND LIMITED TO THOSE MANUFACTURED BY THE MUELLER COMPANY (CENTURION) OR CLOW (MEDALLION). FIRE HYDRANTS SHALL BE PAINTED AND COLOR-CODED IN ACCORDANCE TO AWWA STANDARD UNDER APPENDIX B "UNIFORM COLOR SCHEME FOR FIRE HYDRANTS" SECTIONS B1 AND B2. (NO SEPARATE PAY ITEM) OPEN RIGHT.

22. VALVES THROUGH 12 INCH SHALL BE LIMITED TO MUELLER OR CLOW GATE VALVES LARGER THAN 12 INCH SHALL BE HAND OPERATED, BUTTERFLY VALVES MEETING BMWD SPECIFICATIONS AND A.W.W.A. STANDARDS MANUFACTURED BY THE PREVIOUSLY MENTIONED COMPANY. ALL WATER VALVES ARE TO BE "OPEN LEFT" WITH VALVE COVERS SO INDICATING.

23. ALL SERVICE LINES SHALL BE TYPE K COPPER AND ARE TO BE INSTALLED IN CONTINUOUS RUNS. SERVICE LINES SHOULD HAVE A MINIMUM OF 36 INCHES OF COVER. SERVICE LINES THAT TIE INTO WATER MAINS WITH DISSIMILAR METALS SHALL BE WRAPPED WITH A SUITABLE TAPE, WITH 6" OVERLAP, FOR A MINIMUM CLEAR DISTANCE OF 36 INCHES FROM THE MAIN AS PER AWWA 600. TAPPING SLEEVES SHALL BE M.J. TYPE. ALL LONG SERVICES SHALL BE ENCLOSED IN A 4" PVC SLEEVE PER BEXARMET WATER DISTRICT REQUIREMENTS. PAYMENT INCLUDED IN COST OF LONG SERVICE. METER BOXES SHALL CONFORM TO BMWD SPECIFICATIONS (2 PIECE).

24. TWO INCH VALVES USED FOR BLOW-OFF ASSEMBLIES SHALL BE LIMITED TO RESILIENT WEDGE GATE, EPOXY COATED (INSIDE AND OUT), CAST IRON BODY VALVES WITH STAINLESS STEEL BOLTS MEETING A.W.W.A. STANDARD C509.80. TWO-INCH BLOW-OFFS SHALL BE BLACK IRON PIPE WRAPPED WITH BLACK PVC TAPE THROUGH BLOW-OFF. VALVES SHALL BE FEMALE THREADED CONNECTIONS, STANDARD 2 INCH OPERATING NUT, OPEN LEFT. VALVES SHALL BE MUELLER C-509 RESILIENT WEDGE GATE VALVES. CONTRACTORS ARE TO FURNISH AND INSTALL PERMANENT AND TEMPORARY BLOW-OFFS WITH BMWD STD. DRAWINGS DD-844-01 AND DD-844-02, RESPECTIVELY.

25. SIX, EIGHT, AND TWELVE-INCH DUCTILE IRON PIPE SHALL BE CLASS 52 AND SIXTEEN-INCH AND LARGER SHALL BE CLASS 51. PIPE COUPLING AND JOINTING MATERIALS SHALL BE LIMITED TO THOSE MANUFACTURED BY CERTAINTEED PRODUCTS COMPANY AND JOHNS-MANVILLE SALES CORPORATION. SIX THROUGH TWELVE INCH PVC PIPE SHALL BE AWWA C900 (DR-14) AND SIXTEEN INCH SHALL BE AWWA C905 (DR-18). PRE-WRAPPING AND/OR STACKING OF DUCTILE PIPE WILL NOT BE ALLOWED UNDER ANY CIRCUMSTANCE, UNLESS SPECIFIED BY BEXARMET WATER DISTRICT INSPECTOR. (NO SEPARATE PAY ITEM)

26. WHEN CUT PIPE NIPPLES ARE USED WITH DUCTILE IRON FITTINGS OR VALVES, THE LENGTH SHALL BE AT LEAST THREE TIMES THE DIAMETER OF THE PIPE.

27. FITTING WEIGHT IS BASED ON MJ, DUCTILE IRON FITTINGS (FULL BODY). ALL IRON FITTINGS SHALL BE OF DOMESTIC MANUFACTURE AND DESIGN.

28. GRAVEL BEDDING SHALL BE PLACED 6 INCHES OVER, UNDER AND AROUND ALL WATER MAINS AND SERVICE LINES. THE GRAVEL SHALL BE CLEAN, WELL-GRADED AND CRUSHED SCREENINGS WITH 100% PASSING A1/2" SIEVE, AND 95% PASSING A1/4" SIEVE. THE PLASTICITY INDEX SHALL NOT BE MORE THAN 12 WHEN TESTED I.A.W. TEXAS DEPARTMENT OF TRANSPORTATION TEST METHOD TEX-106-E.

29. WATER MAINS AND SERVICES SHALL BE HYDROSTATICALLY FIELD TESTED ACCORDING TO AWWA C600 LATEST REVISION THERE OF, AND AT A MINIMUM PRESSURE OF 150 PSIBEFORE ACCEPTANCE OR AS SPECIFIED BY BMWD INSPECTOR. SPECIAL ATTENTION SHOULD BE PAID TO BMWD'S HIGH-PRESSURE AREAS. THE CONTRACTOR SHOULD BE AWARE THAT PRESSURE IN THESE HIGH-PRESSURE AREAS RANGES FROM 56 TO 200 PSI. THE HYDROSTATIC TEST FOR THESE AREAS SHOULD BE PERFORMED AT A MINIMUM PRESSURE OF 200 PSI. IT IS THE CONTRACTOR'S RESPONSIBILITY TO VERIFY WHETHER OR NOT HE IS OPERATING IN A HIGH-PRESSURE AREA.

30. THE CONTRACTOR SHALL ARRANGE FOR APPOINTMENTS WITH BEXARMET WATER DISTRICT 24 HOURS PRIOR TO TESTING AND/ OR INSPECTION. TELEPHONE 354-6537.

31. THE FINAL 10 INCHES OF BACKFILL ACROSS DRIVEWAYS AND OTHER TRAFFIC AREAS SHALL BE BACKFILLED WITH BLACK BASE IN ORDER TO INSURE ADEQUATE ACCESS UNTIL FINAL CONSTRUCTION OF DRIVES AND STREETS IS COMPLETED.

32. PAYMENT OF REPLACEMENT OF DRIVES, SIDEWALKS, AND STREETS WILL BE INCLUDED AS PART OF THE WATER LINE CONSTRUCTION.

33. EXISTING FIRE HYDRANTS SHALL BE REMOVED BY THE CONTRACTOR AND SHALL REMAIN THE PROPERTY OF BEXARMET WATER DISTRICT. CONTRACTOR SHALL DELIVER REMOVED FIRE HYDRANTS TO A LOCATION DETERMINED BY BEXARMET WATER DISTRICT (NO SEPARATE ITEM).

34. JUMPER CONNECTIONS TO EXISTING WATER SOURCE SHALL BE PROVIDED BY CONTRACTOR AS REQUIRED OR DIRECTED BY THE BMWD INSPECTOR.
THE CONTRACTOR SHALL DISINFECT ALL MAINS WITH MACHINE CHLORINATION. REQUIRED 2" TAPS AND FITTINGS SHALL BE THE RESPONSIBILITY OF THE CONTRACTOR.

35. ALL VALVES SHALL REMAIN CLOSED UNTIL MAINS HAVE BEEN DISINFECTED, FLUSHED AND RELEASED FOR PUBLIC USE BY THE BMWD. AFTER RELEASE CONTRACTOR SHALL TIE IN EXISTING MAIN TO THE NEW MAIN.

36. AFTER THE NEW MAINS HAVE BEEN RELEASED FOR SERVICE AND SERVICE LINES HAVE BEEN TRANSFERRED TO THE NEW MAINS, ABANDON EXISTING MAINS WHERE SHOWN ON THE PLANS.

37. FIRE HYDRANT SPACING REQUIREMENTS PER BEXARMET BOARD POLICY ARE 500 FEET IN RESIDENTIAL AREAS AND 300 FEET IN COMMERCIAL AND INDUSTRIAL AREAS.

38. CONTRACTOR AND/OR CONTRACTOR'S INDEPENDENTLY RETAINED EMPLOYEE OR STRUCTURAL DESIGN/ GEOTECHNICAL/ SAFETY/ EQUIPMENT CONSULTANT, IF ANY, SHALL REVIEW THESE PLANS AND AVAILABLE GEOTECHNICAL INFORMATION AND THE ANTICIPATED INSTALLATION SITES(S) WITHIN THE PROJECT WORK AREA IN ORDER TO IMPLEMENT CONTRACTOR'S TRENCH EXCAVATION SAFETY PROTECTION SYSTEMS, PROGRAMS AND/OR PROCEDURES FOR THE PROJECT DESCRIBED IN THE CONTRACT DOCUMENTS. THE CONTRACTOR'S IMPLEMENTATION OF THESE SYSTEMS, PROGRAMS AND/OR PROCEDURES SHALL PROVIDE FOR ADEQUATE TRENCH EXCAVATION SAFETY PROTECTION THAT COMPLY WITH AS A MINIMUM, OSHA STANDARDS FOR TRENCH EXCAVATIONS, SPECIFICALLY, CONTRACTOR AND/OR CONTRACTOR'S INDEPENDENTLY RETAINED EMPLOYEE OR SAFETY CONSULTANT SHALL IMPLEMENT A TRENCH SAFETY PROGRAM IN ACCORDANCE WITH OSHA STANDARD GOVERNING THE PRESENCE AND ACTIVITIES OF INDIVIDUAL WORKING IN AND AROUND TRENCH EXCAVATION.

39. THE CONTRACTOR WILL NOTE THAT ALL WORK SHALL BE SCHEDULED TO TAKE PLACE ON MONDAY THROUGH FRIDAY BETWEEN THE HOURS OF 8 AM AND 5 PM. BEXARMET WATER DISTRICT WILL NOT PROVIDE INSPECTORS ON SATURDAY, SUNDAY OR HOLIDAYS UNLESS SPECIAL COMPENSATION ARRANGEMENTS ARE MADE WITH BEXARMET WATER DISTRICT.

40. UPON COMPLETION OF CONSTRUCTION, THE CONTRACTOR SHALL FURNISH THE ENGINEER WITH A SIGNED SET OF PLANS WITH ALL THE FINAL MEASUREMENTS AND AS BUILT INFORMATION FOR PREPARATION OF AS BUILT PLANS. CONTRACTOR SHALL COORDINATE HIS AS BUILT PLANS WITH BEXARMET WATER DISTRICT INSPECTORS PRIOR TO SUBMITTAL TO ENGINEER.

41. AIR RELEASE VALVES SHALL BE INSTALLED AT ALL HIGH POINTS OR AS SPECIFIED BY BMWD ENGINEER AND SHOULD COMPLY WITH THE FOLLOWING SCHEDULE: 6" PIPE (3/4" ARV); 8" PIPE (1" ARV); 12" - 16" PIPE (2" ARV); & 20" - 24" PIPE (3" ARV).

42. CONTRACTOR MUST INSTALL PROPER JOINT RESTRAINTS AS DETERMINED BY BEXAR MET IN ACCORDANCE WITH EBAA IRON INC., PIPE SIZE, LENGTH, SOIL TYPE REQUIREMENTS, IN CONJUNCTION WITH PROPER THRUST BLOCKING. CONTRACTOR MUST INSTALL JOINT RESTRAINTS PER MANUFACTURER'S SPECIFICATIONS.
- DOUBLE NUT ALL RESTRAINING BOLTS
- ANY TYPE OF JOINT RESTRAINT MUST BE BI-DIRECTIONAL
- WITH FIRE HYDRANT INSTALLATION, CUT TO FIT NIPPLES MUST BE RESTRAINED
- RESTRAINT RINGS OF PIPE BELLS SHALL BE MADE OF DUCTILE IRON COMPONENTS.

ALL DUCTILE IRON SHALL CONFORM TO ASTM A536. THE RESTRAINT MECHANISM SHALL CONSIST OF A PLURALITY OF INDIVIDUALLY ACTIVATED GRIPPING SURFACES TO MAXIMIZE RESTRAINT CAPABILITY.

43. REQUEST FOR CLARIFICATION, ADDITIONAL INFORMATION, OR INTERPRETATION OF EITHER DRAWINGS OR SPECIFICATIONS SHALL BE SUBMITTED IN WRITING ON APPROVED BEXARMET REQUEST FOR INFORMATION (RFI) FORMS TO THE BEXARMET ENGINEERING DEPARTMENT. ONLY WRITTEN RFIFORMS WILL BE ANSWERED; REQUEST NOT SUBMITTED IN WRITING WILL NOT BE CONSIDERED.

44. DISPOSAL AREAS, STOCKPILES, AND HAUL ROADS SHALL BE CONSTRUCTED IN A MANNER THAT WILL MINIMIZE AND CONTROL THE AMOUNT OF SEDIMENT WHICH MAY ENTER RECEIVING WATERS. DISPOSAL AREAS SHALL NOT BE LOCATED ON ANY WETLANDS, WATER BODY, OR STREAM BED. THE CONTRACTOR SHALL LOCATE AND CONSTRUCT CONSTRUCTION STAGING AREAS AND VEHICLE MAINTENANCE AND PARKING AREAS IN A MANNER TO MINIMIZE POLLUTANT RUNOFF AND IN ACCORDANCE WITH BEXARMET REQUIREMENTS.

45. THE CONTRACTOR SHALL CLEAR ALL WATERWAYS AS SOON AS PRACTICABLE OF ALL TEMPORARY EMBANKMENT, TEMPORARY BRIDGES, MATTING, FALSEWORK, PILING, DEBRIS, OR OBSTRUCTIONS PLACED DURING CONSTRUCTION OPERATIONS WHICH ARE NOT PART OF THE FINISHED WORK.

46. THE CONTRACTOR SHALL MAINTAIN ALL EROSION AND SEDIMENT CONTROLS IN GOOD WORKING ORDER AND IN ACCORDANCE WITH THE REQUIREMENTS OF BEXARMET. IF REPAIRS ARE NECESSARY, THEY SHALL BE DONE AT THE EARLIEST DATE POSSIBLE, BUT NO LATE THAN 7 CALENDAR DAYS AFTER THE SURROUNDING EXPOSED GROUND HAS DRIED SUFFICIENTLY TO PREVENT FURTHER DAMAGE FROM CONTRACTORS EQUIPMENT. THE AREAS ADJACENT TO CREEKS AND DRAINAGE WAYS SHALL BE GIVEN FIRST PRIORITY, FOLLOWED BY DEVICES AND SYSTEMS PROTECTING STORM SEWER INLETS.

THE SEAL THAT ORIGINALLY APPEARED ON THIS DOCUMENT WAS AUTHORIZED BY: HUGO CABRERA TEXAS P. E. NO.: 98245 ON DATE 2/10/07 ALTERATION ON A SEALED DOCUMENT WITHOUT PROPER NOTIFICATION OF THE RESPONSIBLE ENGINEER IS AN OFFENSE UNDER THE TEXAS ENGINEERING PRACTICE ACT

AS-BUILT/PLAN OF RECORD
SUBMITTED JULY 2011

THESE DOCUMENTS HAVE BEEN PREPARED BASED ON INFORMATION PROVIDED BY OTHERS. THOSE RELYING ON THIS RECORD DOCUMENT ARE ADVISED TO OBTAIN INDEPENDENT VERIFICATION OF ITS ACCURACY BEFORE APPLYING IT FOR ANY PURPOSE.

NO.	REVISION	BY	DATE

BexarMet WATER DISTRICT

CP&Y Chiang, Patel & Yerby, Inc.

BEXAR COUNTY
PUBLIC WORKS DIVISION

F.M. 2696 (BLANCO ROAD)

GENERAL NOTES

SHEET 1 OF 1

				BEXAR COUNTY FILE NUMBER	PLAN SET NO.
Designed:	RG	STATE			
Checked:	HC	TEXAS			UTTS02
Drawn:	RG	COUNTY			OF
Checked:	HC	BEXAR			SHEETTOTAL

pw:/Active Projects/BEX6102/8.0000Sanitary Drawings/8.10 Cut Sheets/8.1.17 Bexar Met/6102CSUTGY02.dgn

SHEET NOTES

1. CONTRACTOR SHALL MACHINE CHLORINATE LINE "A", LINE "A-1" AND LINE "A-2".
2. EXISTING MAINS TO BE CUT AND CAPPED SHALL BE ABANDONED IN PLACE.
3. UTILITIES ARE BASED ON ABOVE GROUND EVIDENCE AND EXISTING UTILITY MAPS. UNDER GROUND LOCATIONS ARE APPROXIMATE. IT IS THE CONTRACTOR'S RESPONSIBILTY TO IDENTIFY, LOCATE AND EXPOSE (IF NECESSARY) ALL UTILITIES WITHIN THE PROJECT AREA.
4. THE ENTIRE LINE A-1 AND LINE A-2 SHALL BE MECHANICALLY RESTRAINED.
5. WATER PIPE TO BE MECHANICALLY RESTRAINED. REFER TO WATER FACILITY DETAILS.
6. ROUTE TEMP. BLOW-OFF DISCHARGE PIPING OUT OF THE ROADWAY.
7. SECONDARY BACKFILL FOR WATER MAIN TRENCHES UNDER PROPOSED ROADWAY PAVEMENT SHALL CONSIST OF FLOWABLE FILL (BID ITEM "FLOWABLE FILL").
8. EXISTING PAVEMENT THAT IS CUT FOR WATER MAIN INSTALLATION SHALL BE REPAIRED BY THE CONTRACTOR AS PROVIDED UNDER THE BID ITEM "CUT AND REPLACE ASPH PVMT W/8 IN ATB"
9. FOR LINE "A-1" AND "A-2" PROFILE, SEE SHEET 1 OF 3.

AS-BUILT/PLAN OF RECORD
SUBMITTED JULY 2011

THESE DOCUMENTS HAVE BEEN PREPARED BASED ON INFORMATION PROVIDED BY OTHERS. THOSE RELYING ON THIS RECORD DOCUMENT ARE ADVISED TO OBTAIN INDEPENDENT VERIFICATION OF ITS ACCURACY BEFORE APPLYING IT FOR ANY PURPOSE.

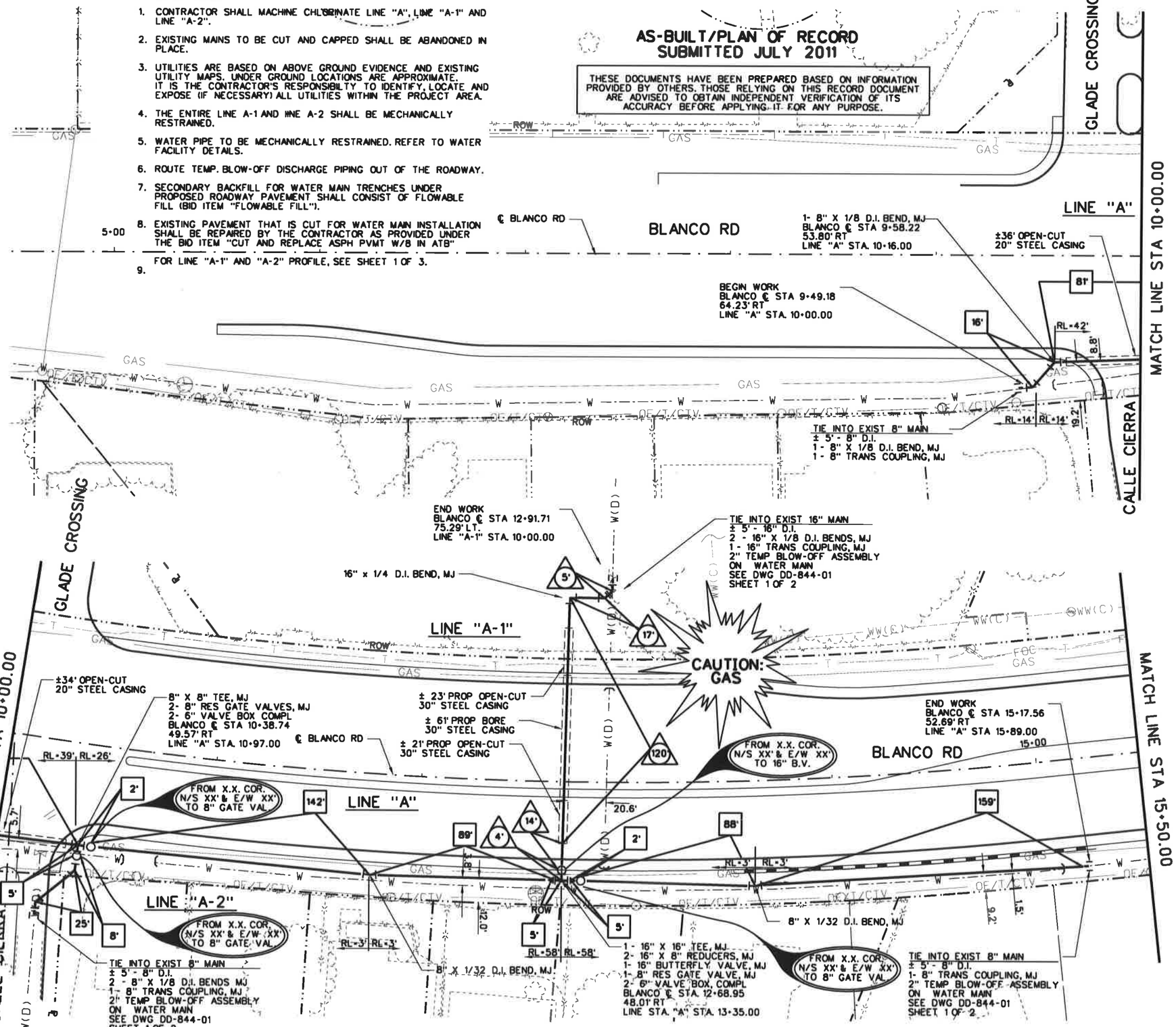

25 12.5 0 25 50
HORIZ. SCALE FEET

LEGEND

- MSE RETAINING WALL
- CAST-IN-PLACE RETAINING WALL
- SMALL METER
- LARGE METER
- REDUCER
- PROPOSED VALVE
- 2" AIR RELEASE VALVE
- FIRE HYDRANT
- LAND HOOK (COMMON OWNER)
- ORIGINAL PROPERTY LINE
- EASEMENT LINE
- EXISTING VALVE
- EXISTING METER

THE SEAL THAT ORIGINALLY APPEARED ON THIS DOCUMENT WAS AUTHORIZED BY: HUGO CABRERA TEXAS P. E. NO.: 98245 ON DATE 2/11/08 ALTERATION ON A SEALED DOCUMENT WITHOUT PROPER NOTIFICATION OF THE RESPONSIBLE ENGINEER IS AN OFFENSE UNDER THE TEXAS ENGINEERING PRACTICE ACT

NO.	REVISION	BY	DATE

BexarMet WATER DISTRICT

CP&Y Chiang, Patel & Yerby, Inc.

BEXAR COUNTY
PUBLIC WORKS DIVISION

F.M. 2696 (BLANCO ROAD)

WATER LINE
STA 4+50.00 TO STA 15+50.00

SHEET 1 OF 15

Designed: RG	STATE	BEXAR COUNTY FILE NUMBER	PLAN SET NO.
Checked: JA	TEXAS		UTIL01
Drawn: RG	COUNTY		OF
Checked: JA	BEXAR		SHEET TOTAL

pw:/Active Projects/BEX6102.
Drawings/B.10 Cut Sheets/B.1.17 Bexar Met/6102CSRDUT01.DSO

SHEET NOTES

1. CONTRACTOR SHALL MACHINE CHLORINATE LINE "B".
2. EXISTING MAINS TO BE CUT AND CAPPED SHALL BE ABANDONED IN PLACE.
3. UTILITIES ARE BASED ON ABOVE GROUND EVIDENCE AND EXISTING UTILITY MAPS. UNDER GROUND LOCATIONS ARE APPROXIMATE. IT IS THE CONTRACTOR'S RESPONSIBILTY TO IDENTIFY, LOCATE AND EXPOSE (IF NECESSARY) ALL UTILITIES WITHIN THE PROJECT AREA.
4. WATER PIPE TO BE MECHANICALLY RESTRAINED. REFER TO WATER FACILITY DETAILS.
5. ROUTE TEMP. BLOW-OFF DISCHARGE PIPING OUT OF THE ROADWAY.
6. CONTRACTOR SHALL CUT-IN VALVE IF VALVE CAN NOT BE LOCATED AT FIRE HYDRANT. COORDINATE WITH BMWD INSPECTOR
7. SECONDARY BACKFILL FOR WATER MAIN TRENCHES UNDER PROPOSED ROADWAY PAVEMENT SHALL CONSIST OF FLOWABLE FILL (BID ITEM "FLOWABLE FILL")
8. EXISTING PAVEMENT THAT IS CUT FOR WATER MAIN INSTALLATION SHALL BE REPAIRED BY THE CONTRACTOR AS PROVIDED UNDER THE BID ITEM "CUT AND REPLACE ASPH PVMT W/8 IN ATB"

AS-BUILT/PLAN OF RECORD SUBMITTED JULY 2011

THESE DOCUMENTS HAVE BEEN PREPARED BASED ON INFORMATION PROVIDED BY OTHERS. THOSE RELYING ON THIS RECORD DOCUMENT ARE ADVISED TO OBTAIN INDEPENDENT VERIFICATION OF ITS ACCURACY BEFORE APPLYING IT FOR ANY PURPOSE.

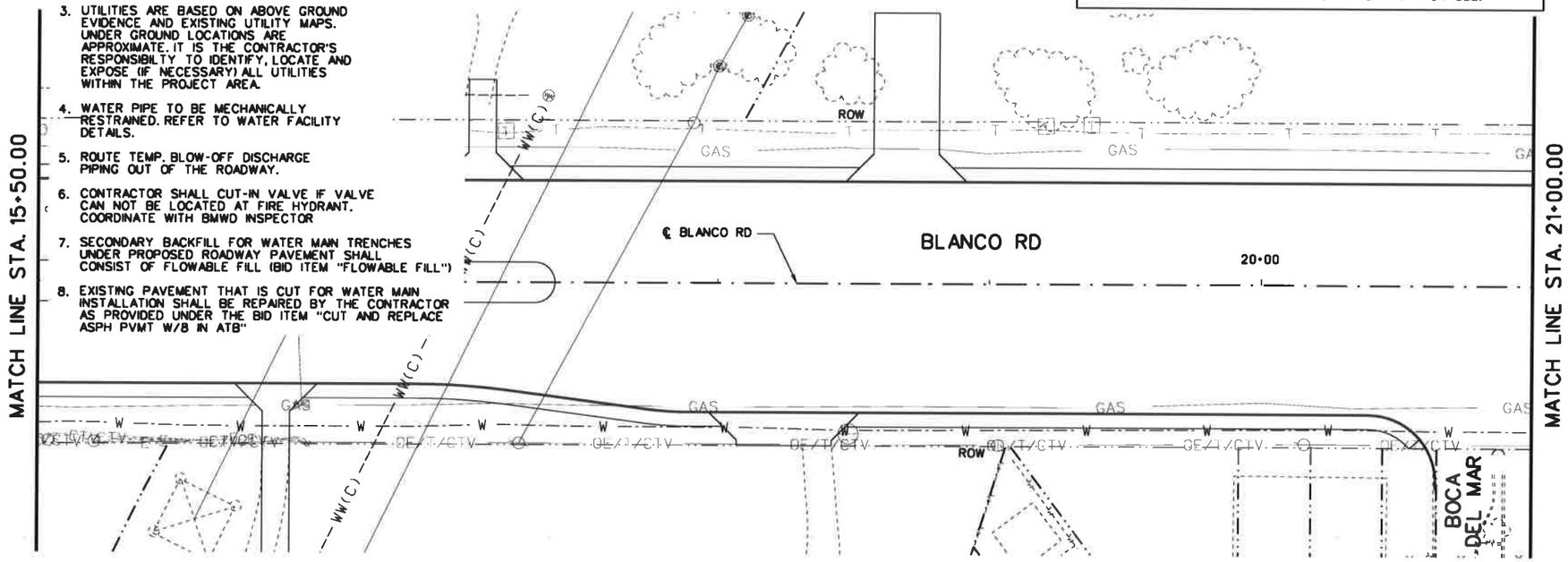

25 12.5 0 25 50
HORIZ. SCALE FEET

LEGEND

- MSE RETAINING WALL
- CAST-IN-PLACE RETAINING WALL
- SMALL METER
- LARGE METER
- REDUCER
- PROPOSED VALVE
- 2" AIR RELEASE VALVE
- FIRE HYDRANT
- LAND HOOK (COMMON OWNER)
- ORIGINAL PROPERTY LINE
- EASEMENT LINE
- EXISTING VALVE
- EXISTING METER

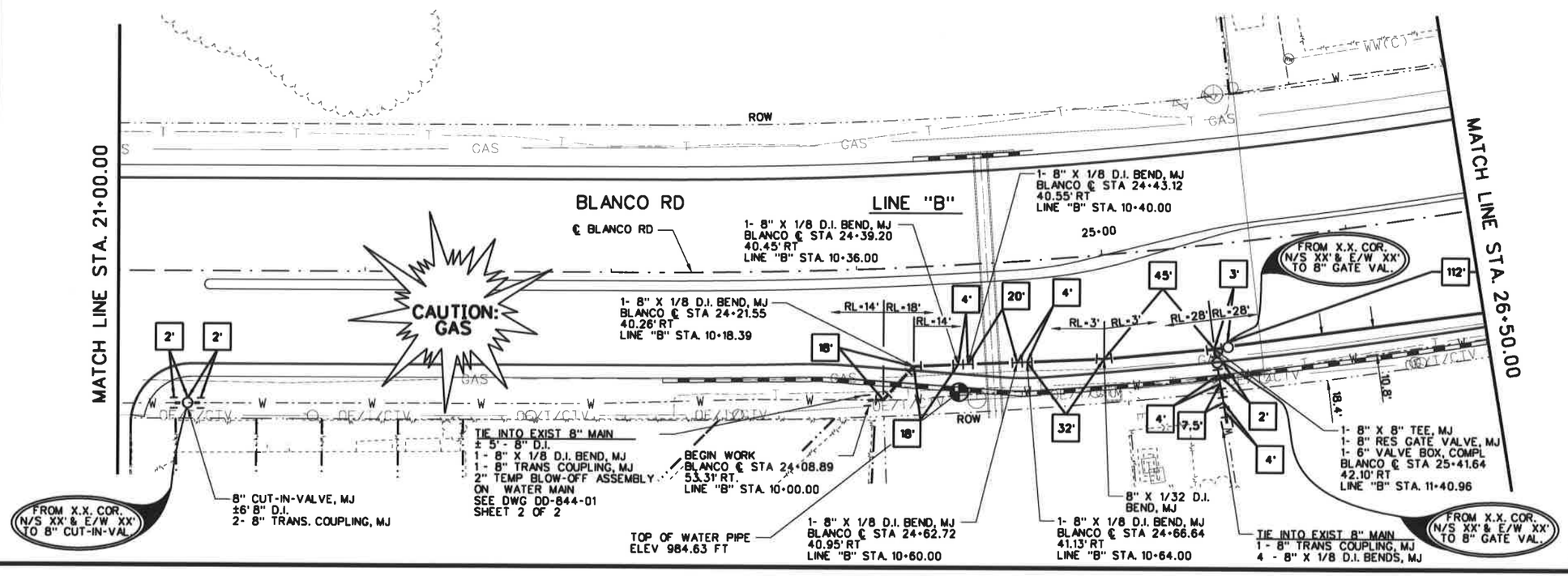

THE SEAL THAT ORIGINALLY APPEARED ON THIS DOCUMENT WAS AUTHORIZED BY: HUGO CABRERA TEXAS P. E. NO.: 98245 ON DATE 2/11/08 ALTERATION ON A SEALED DOCUMENT WITHOUT PROPER NOTIFICATION OF THE RESPONSIBLE ENGINEER IS AN OFFENSE UNDER THE TEXAS ENGINEERING PRACTICE ACT

NO.	REVISION	BY	DATE

BexarMet WATER DISTRICT

CP&Y Chiang, Patel & Yerby, Inc.

BEXAR COUNTY PUBLIC WORKS DIVISION

F.M. 2696 (BLANCO ROAD)

WATER LINE

STA 15+50.00 TO STA 26+50.00

SHEET 2 OF 15

Designed: RG	STATE	BEXAR COUNTY FILE NUMBER	PLAN SET NO.
Checked: JA	TEXAS		UTIL02
Drawn: RG	COUNTY		OF
Checked: JA	BEXAR		SHEET TOTAL

pw:/Active Projects/BEX6102/8.001HUGO/JM Drawings/8.10 Cut Sheets/8.1.17 Bexar Met/6102CSRDUT02.050

AS-BUILT/PLAN OF RECORD
SUBMITTED JULY 2011

THESE DOCUMENTS HAVE BEEN PREPARED BASED ON INFORMATION PROVIDED BY OTHERS. THOSE RELYING ON THIS RECORD DOCUMENT ARE ADVISED TO OBTAIN INDEPENDENT VERIFICATION OF ITS ACCURACY BEFORE APPLYING IT FOR ANY PURPOSE.

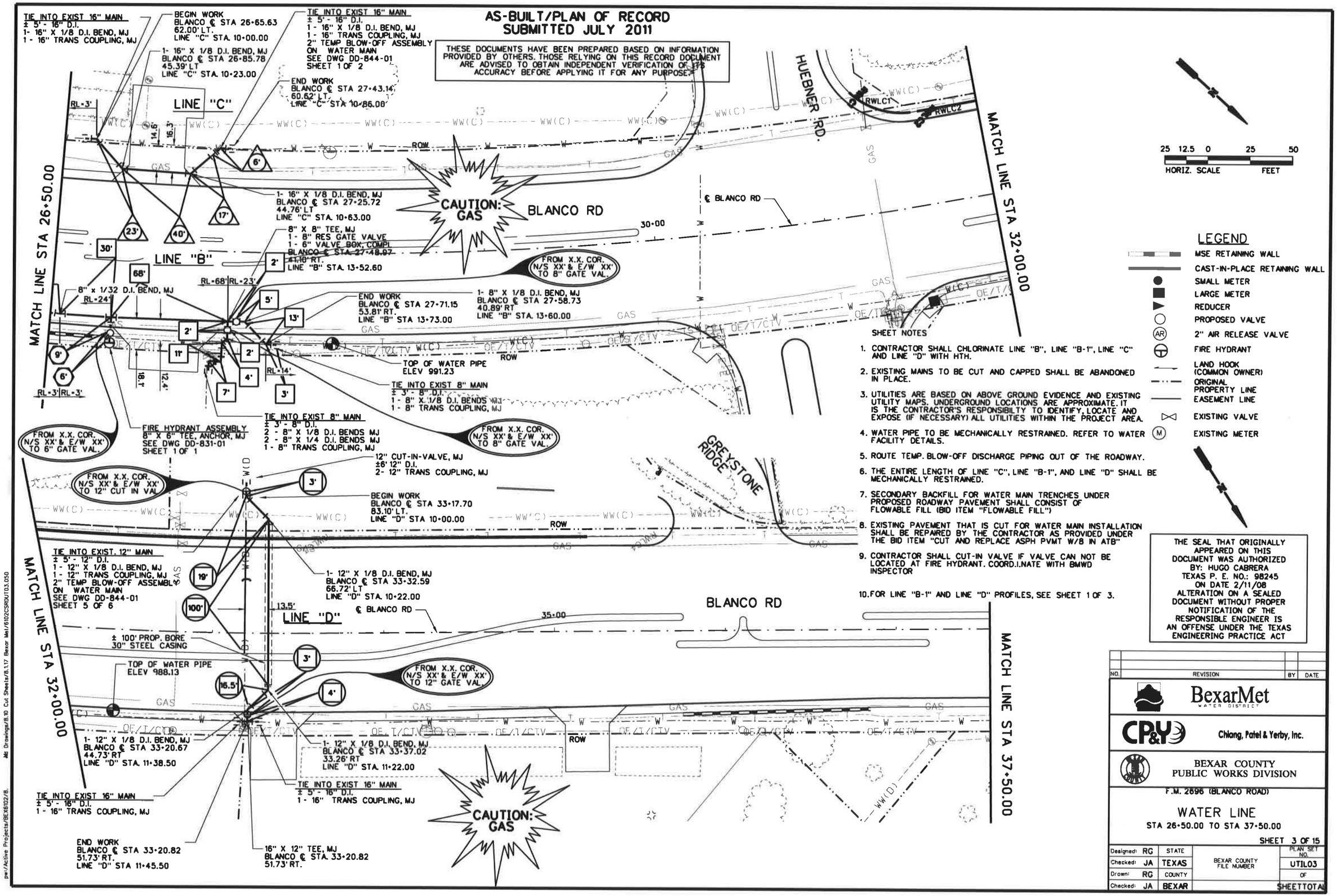

LEGEND

- MSE RETAINING WALL
- CAST-IN-PLACE RETAINING WALL
- SMALL METER
- LARGE METER
- REDUCER
- PROPOSED VALVE
- (AR) 2" AIR RELEASE VALVE
- FIRE HYDRANT
- LAND HOOK (COMMON OWNER)
- ORIGINAL PROPERTY LINE
- EASEMENT LINE
- EXISTING VALVE
- (M) EXISTING METER

SHEET NOTES

1. CONTRACTOR SHALL CHLORINATE LINE "B", LINE "B-1", LINE "C" AND LINE "D" WITH HTH.
2. EXISTING MAINS TO BE CUT AND CAPPED SHALL BE ABANDONED IN PLACE.
3. UTILITIES ARE BASED ON ABOVE GROUND EVIDENCE AND EXISTING UTILITY MAPS. UNDERGROUND LOCATIONS ARE APPROXIMATE. IT IS THE CONTRACTOR'S RESPONSIBILTY TO IDENTIFY, LOCATE AND EXPOSE (IF NECESSARY) ALL UTILITIES WITHIN THE PROJECT AREA.
4. WATER PIPE TO BE MECHANICALLY RESTRAINED. REFER TO WATER FACILITY DETAILS.
5. ROUTE TEMP. BLOW-OFF DISCHARGE PIPING OUT OF THE ROADWAY.
6. THE ENTIRE LENGTH OF LINE "C", LINE "B-1", AND LINE "D" SHALL BE MECHANICALLY RESTRAINED.
7. SECONDARY BACKFILL FOR WATER MAIN TRENCHES UNDER PROPOSED ROADWAY PAVEMENT SHALL CONSIST OF FLOWABLE FILL (BID ITEM "FLOWABLE FILL")
8. EXISTING PAVEMENT THAT IS CUT FOR WATER MAIN INSTALLATION SHALL BE REPAIRED BY THE CONTRACTOR AS PROVIDED UNDER THE BID ITEM "CUT AND REPLACE ASPH PVMT W/8 IN ATB"
9. CONTRACTOR SHALL CUT-IN VALVE IF VALVE CAN NOT BE LOCATED AT FIRE HYDRANT. COORD.I.NATE WITH BMWD INSPECTOR
10. FOR LINE "B-1" AND LINE "D" PROFILES, SEE SHEET 1 OF 3.

THE SEAL THAT ORIGINALLY APPEARED ON THIS DOCUMENT WAS AUTHORIZED BY: HUGO CABRERA TEXAS P. E. NO.: 98245 ON DATE 2/11/08 ALTERATION ON A SEALED DOCUMENT WITHOUT PROPER NOTIFICATION OF THE RESPONSIBLE ENGINEER IS AN OFFENSE UNDER THE TEXAS ENGINEERING PRACTICE ACT

NO.	REVISION	BY	DATE

BexarMet WATER DISTRICT

CP&Y Chiang, Patel & Yerby, Inc.

BEXAR COUNTY PUBLIC WORKS DIVISION

F.M. 2696 (BLANCO ROAD)

WATER LINE

STA 26+50.00 TO STA 37+50.00

SHEET 3 OF 15

Designed: RG	STATE	BEXAR COUNTY FILE NUMBER	PLAN SET NO.
Checked: JA	TEXAS		UTIL03
Drawn: RG	COUNTY		OF
Checked: JA	BEXAR		SHEETTOTAL

pw:/Active Projects/BE\61022\8. Mid Drawings\8.10 Cut Sheets\8.1.17 Bexar Met\6102CSR0UT03.DGN

AS-BUILT/PLAN OF RECORD
SUBMITTED JULY 2011

THESE DOCUMENTS HAVE BEEN PREPARED BASED ON INFORMATION PROVIDED BY OTHERS. THOSE RELYING ON THIS RECORD DOCUMENT ARE ADVISED TO OBTAIN INDEPENDENT VERIFICATION OF ITS ACCURACY BEFORE APPLYING IT FOR ANY PURPOSE.

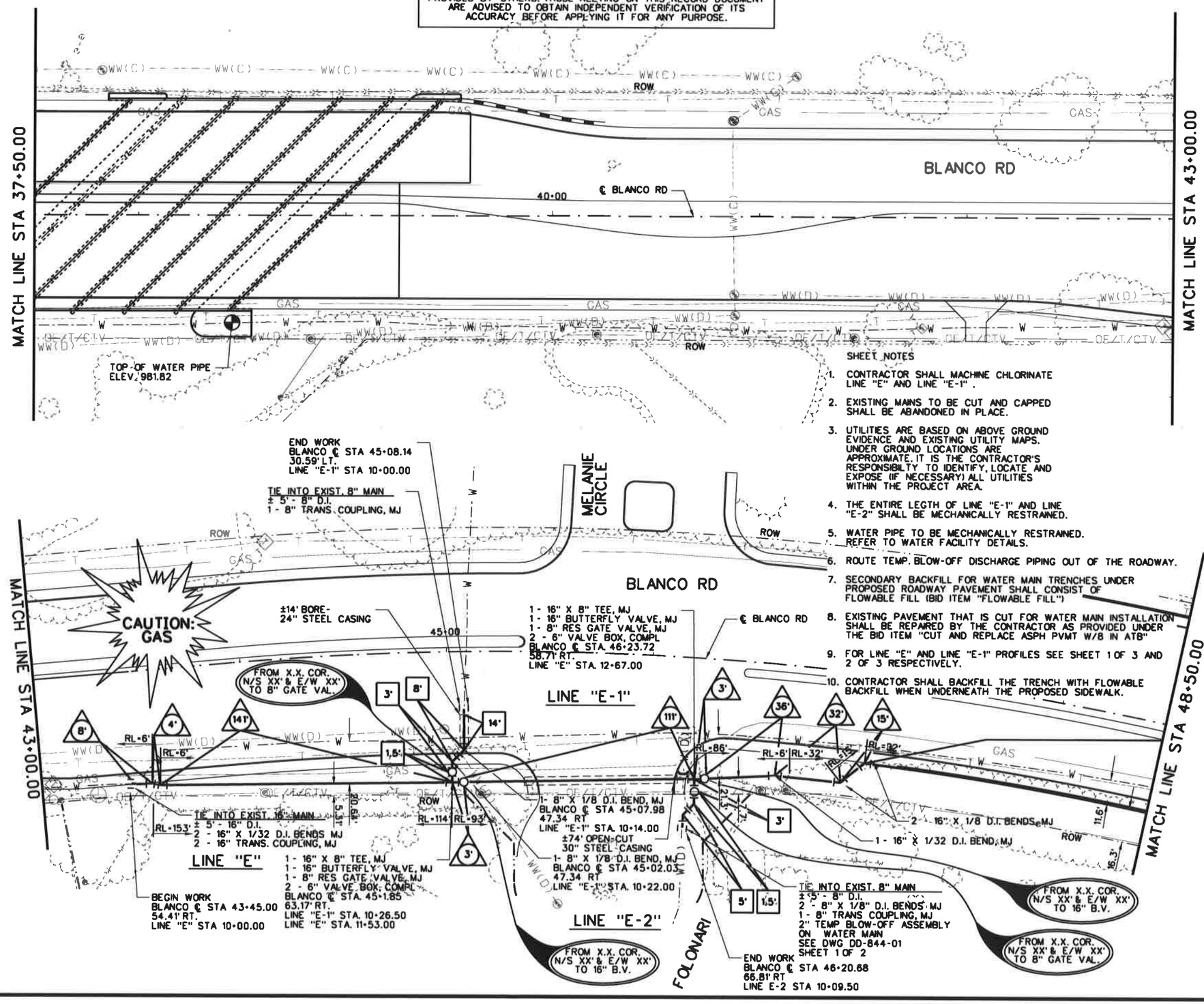

SHEET NOTES

1. CONTRACTOR SHALL MACHINE CHLORINATE LINE "E" AND LINE "E-1".
2. EXISTING MAINS TO BE CUT AND CAPPED SHALL BE ABANDONED IN PLACE.
3. UTILITIES ARE BASED ON ABOVE GROUND EVIDENCE AND EXISTING UTILITY MAPS. UNDER GROUND LOCATIONS ARE APPROXIMATE. IT IS THE CONTRACTOR'S RESPONSIBILTY TO IDENTIFY, LOCATE AND EXPOSE (IF NECESSARY) ALL UTILITIES WITHIN THE PROJECT AREA.
4. THE ENTIRE LEGTH OF LINE "E-1" AND LINE "E-2" SHALL BE MECHANICALLY RESTRAINED.
5. WATER PIPE TO BE MECHANICALLY RESTRAINED. REFER TO WATER FACILITY DETAILS.
6. ROUTE TEMP. BLOW-OFF DISCHARGE PIPING OUT OF THE ROADWAY.
7. SECONDARY BACKFILL FOR WATER MAIN TRENCHES UNDER PROPOSED ROADWAY PAVEMENT SHALL CONSIST OF FLOWABLE FILL (BID ITEM "FLOWABLE FILL")
8. EXISTING PAVEMENT THAT IS CUT FOR WATER MAIN INSTALLATION SHALL BE REPAIRED BY THE CONTRACTOR AS PROVIDED UNDER THE BID ITEM "CUT AND REPLACE ASPH PVMT W/8 IN ATB"
9. FOR LINE "E" AND LINE "E-1" PROFILES SEE SHEET 1 OF 3 AND 2 OF 3 RESPECTIVELY.
10. CONTRACTOR SHALL BACKFILL THE TRENCH WITH FLOWABLE BACKFILL WHEN UNDERNEATH THE PROPOSED SIDEWALK.

25 12.5 0 25 50
HORIZ. SCALE FEET

LEGEND

- MSE RETAINING WALL
- CAST-IN-PLACE RETAINING WALL
- SMALL METER
- LARGE METER
- REDUCER
- PROPOSED VALVE
- 2" AIR RELEASE VALVE
- FIRE HYDRANT
- LAND HOOK (COMMON OWNER)
- ORIGINAL PROPERTY LINE
- EASEMENT LINE
- EXISTING VALVE
- EXISTING METER

THE SEAL THAT ORIGINALLY APPEARED ON THIS DOCUMENT WAS AUTHORIZED BY: HUGO CABRERA TEXAS P. E. NO.: 98245 ON DATE 2/11/08 ALTERATION ON A SEALED DOCUMENT WITHOUT PROPER NOTIFICATION OF THE RESPONSIBLE ENGINEER IS AN OFFENSE UNDER THE TEXAS ENGINEERING PRACTICE ACT

NO.	REVISION	BY	DATE

BexarMet WATER DISTRICT

CP&Y Chiang, Patel & Yerby, Inc.

BEXAR COUNTY PUBLIC WORKS DIVISION

F.M. 2696 (BLANCO ROAD)

WATER LINE

STA 37+50.00 TO STA 48+50.00

SHEET 4 OF 15

Designed: RG	STATE	BEXAR COUNTY FILE NUMBER	PLAN SET NO.	
Checked: JA	TEXAS		UTIL04	
Drawn: RG	COUNTY		OF	
Checked: JA	BEXAR		SHEET TOTAL	

pw:/Active Projects/BEX6102/8.0022/5.0 Final Drawings/8.10 Cut Sheets/8.1.17 Bexar Met/6102CSROUT04.050

AS-BUILT/PLAN OF RECORD
SUBMITTED JULY 2011

THESE DOCUMENTS HAVE BEEN PREPARED BASED ON INFORMATION PROVIDED BY OTHERS. THOSE RELYING ON THIS RECORD DOCUMENT ARE ADVISED TO OBTAIN INDEPENDENT VERIFICATION OF ITS ACCURACY BEFORE APPLYING IT FOR ANY PURPOSE.

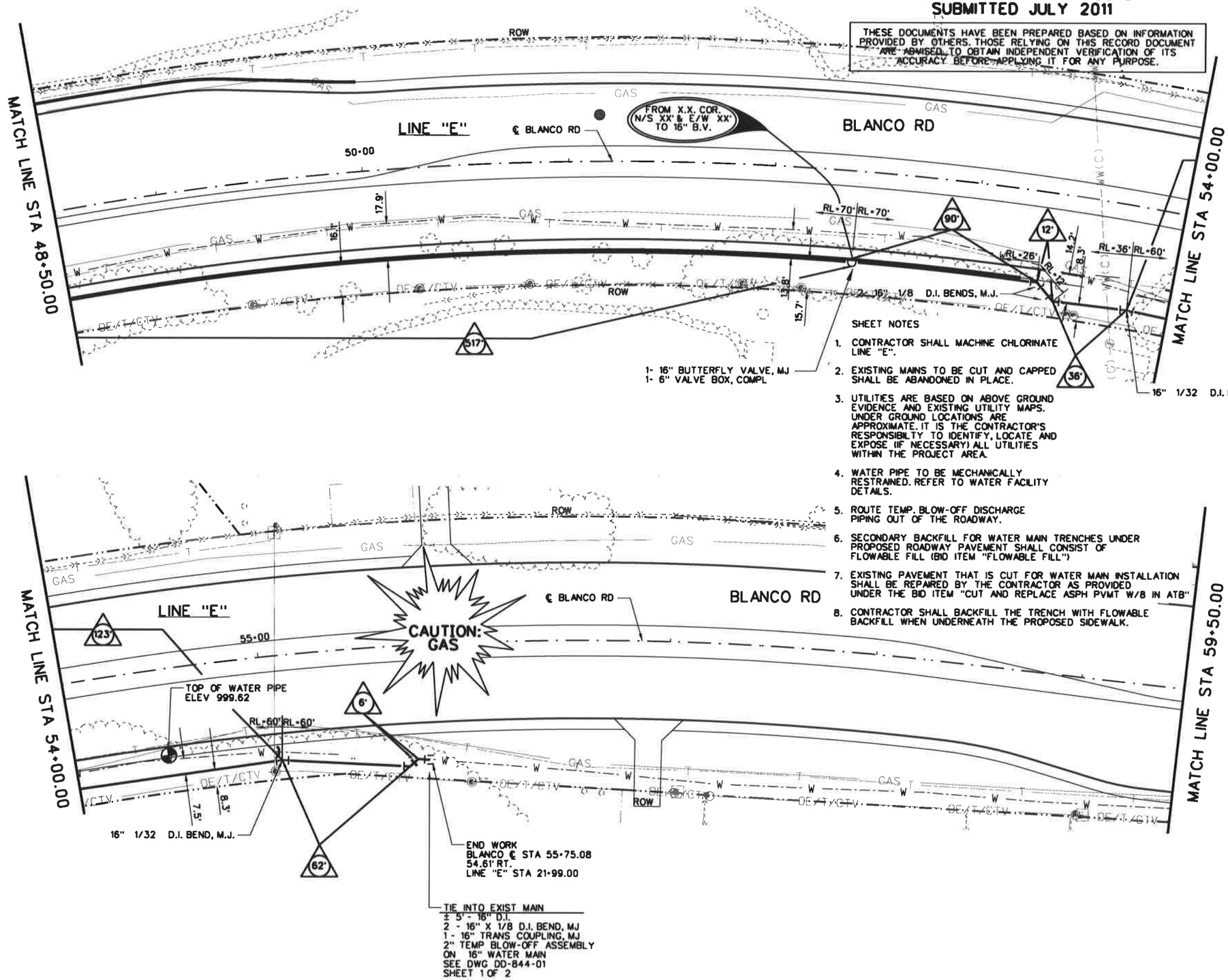

SHEET NOTES

1. CONTRACTOR SHALL MACHINE CHLORINATE LINE "E".
2. EXISTING MAINS TO BE CUT AND CAPPED SHALL BE ABANDONED IN PLACE.
3. UTILITIES ARE BASED ON ABOVE GROUND EVIDENCE AND EXISTING UTILITY MAPS. UNDER GROUND LOCATIONS ARE APPROXIMATE. IT IS THE CONTRACTOR'S RESPONSIBILTY TO IDENTIFY, LOCATE AND EXPOSE (IF NECESSARY) ALL UTILITIES WITHIN THE PROJECT AREA.
4. WATER PIPE TO BE MECHANICALLY RESTRAINED. REFER TO WATER FACILITY DETAILS.
5. ROUTE TEMP. BLOW-OFF DISCHARGE PIPING OUT OF THE ROADWAY.
6. SECONDARY BACKFILL FOR WATER MAIN TRENCHES UNDER PROPOSED ROADWAY PAVEMENT SHALL CONSIST OF FLOWABLE FILL (BID ITEM "FLOWABLE FILL")
7. EXISTING PAVEMENT THAT IS CUT FOR WATER MAIN INSTALLATION SHALL BE REPAIRED BY THE CONTRACTOR AS PROVIDED UNDER THE BID ITEM "CUT AND REPLACE ASPH PVMT W/8 IN ATB"
8. CONTRACTOR SHALL BACKFILL THE TRENCH WITH FLOWABLE BACKFILL WHEN UNDERNEATH THE PROPOSED SIDEWALK.

25 12.5 0 25 50
HORIZ. SCALE FEET

LEGEND

- MSE RETAINING WALL
- CAST-IN-PLACE RETAINING WALL
- SMALL METER
- LARGE METER
- REDUCER
- PROPOSED VALVE
- AR 2" AIR RELEASE VALVE
- FIRE HYDRANT
- LAND HOOK (COMMON OWNER)
- ORIGINAL PROPERTY LINE
- EASEMENT LINE
- EXISTING VALVE
- M EXISTING METER

THE SEAL THAT ORIGINALLY APPEARED ON THIS DOCUMENT WAS AUTHORIZED BY: HUGO CABRERA TEXAS P. E. NO.: 98245 ON DATE 2/11/08 ALTERATION ON A SEALED DOCUMENT WITHOUT PROPER NOTIFICATION OF THE RESPONSIBLE ENGINEER IS AN OFFENSE UNDER THE TEXAS ENGINEERING PRACTICE ACT

NO.	REVISION	BY	DATE

BexarMet WATER DISTRICT

CP&Y Chiang, Patel & Yerby, Inc.

BEXAR COUNTY PUBLIC WORKS DIVISION

F.M. 2696 (BLANCO ROAD)

WATER LINE
STA 48+50.00 TO STA 59+50.00

SHEET 5 OF 15

Designed: RG	STATE	BEXAR COUNTY FILE NUMBER	PLAN SET NO.
Checked: JA	TEXAS		UTIL05
Drawn: RG	COUNTY		OF
Checked: JA	BEXAR		SHEETTOTAL

pw:/Active Projects/BEX6102/8.0 Drawings/8.10 Cut Sheets/8.1.17 Bexar Met/6102CSROUT05.050

AS-BUILT/PLAN OF RECORD
SUBMITTED JULY 2011

THESE DOCUMENTS HAVE BEEN PREPARED BASED ON INFORMATION PROVIDED BY OTHERS. THOSE RELYING ON THIS RECORD DOCUMENT ARE ADVISED TO OBTAIN INDEPENDENT VERIFICATION OF ITS ACCURACY BEFORE APPLYING IT FOR ANY PURPOSE.

SHEET NOTES

1. THE CONTRACTOR SHALL CHLORINATE LINE "F" AND LINE "G" WITH HTH.
2. EXISTING MAINS TO BE CUT AND CAPPED SHALL BE ABANDONED IN PLACE.
3. UTILITIES ARE BASED ON ABOVE GROUND EVIDENCE AND EXISTING UTILITY MAPS. UNDER GROUND LOCATIONS ARE APPROXIMATE. IT IS THE CONTRACTOR'S RESPONSIBILITY TO IDENTIFY, LOCATE AND EXPOSE (IF NECESSARY) ALL UTILITIES WITHIN THE PROJECT AREA.
4. WATER PIPE TO BE MECHANICALLY RESTRAINED. REFER TO WATER FACILITY DETAILS.
5. ROUTE TEMP. BLOW-OFF DISCHARGE PIPING OUT OF THE ROADWAY.
6. THE ENTIRE LENGTH OF LINE "F" SHALL BE MECHANICALLY RESTRAINED.
7. SECONDARY BACKFILL FOR WATER MAIN TRENCHES UNDER PROPOSED ROADWAY PAVEMENT SHALL CONSIST OF FLOWABLE FILL (BID ITEM "FLOWABLE FILL")
8. EXISTING PAVEMENT THAT IS CUT FOR WATER MAIN INSTALLATION SHALL BE REPAIRED BY THE CONTRACTOR AS PROVIDED UNDER THE BID ITEM "CUT AND REPLACE ASPH PVMT W/8 IN ATB"
9. CONTRACTOR SHALL CUT-IN VALVE IF VALVE CAN NOT BE LOCATED AT FIRE HYDRANT. COORDINATE WITH BMWD INSPECTOR.
10. FOR LINE "F" PROFILE, SEE SHEET 2 OF 3.

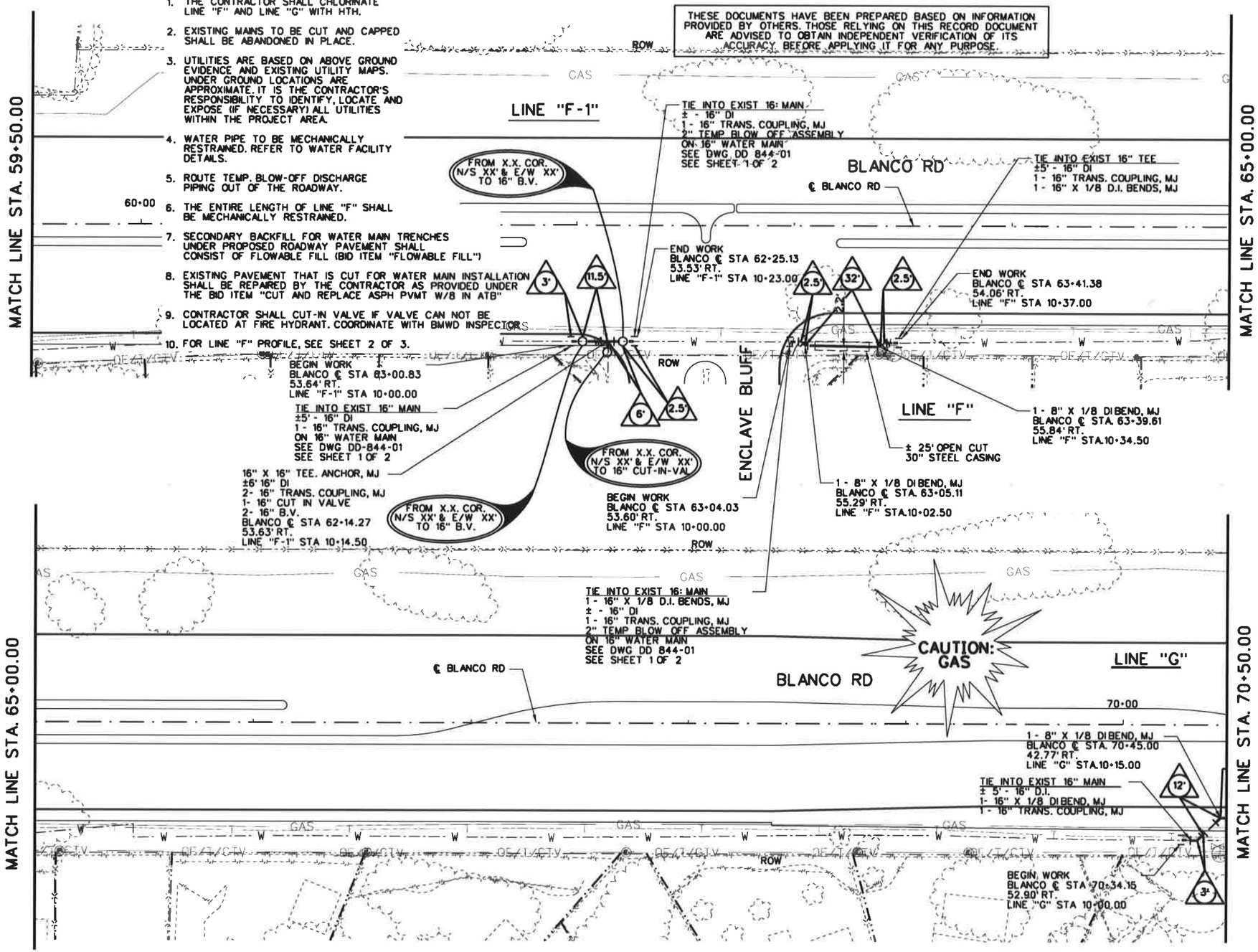

25 12.5 0 25 50
HORIZ. SCALE FEET

LEGEND

- MSE RETAINING WALL
- CAST-IN-PLACE RETAINING WALL
- SMALL METER
- LARGE METER
- REDUCER
- PROPOSED VALVE
- 2" AIR RELEASE VALVE
- FIRE HYDRANT
- LAND HOOK (COMMON OWNER)
- ORIGINAL PROPERTY LINE
- EASEMENT LINE
- EXISTING VALVE
- EXISTING METER

THE SEAL THAT ORIGINALLY APPEARED ON THIS DOCUMENT WAS AUTHORIZED BY: HUGO CABRERA TEXAS P. E. NO.: 98245 ON DATE 2/11/08 ALTERATION ON A SEALED DOCUMENT WITHOUT PROPER NOTIFICATION OF THE RESPONSIBLE ENGINEER IS AN OFFENSE UNDER THE TEXAS ENGINEERING PRACTICE ACT

NO.	REVISION	BY	DATE

BexarMet WATER DISTRICT

CP&Y Chiang, Patel & Yerby, Inc.

BEXAR COUNTY PUBLIC WORKS DIVISION

F.M. 2696 (BLANCO ROAD)

WATER LINE

STA 59+50.00 TO STA 70+50.00

SHEET 6 OF 15

Designed: RG	STATE	BEXAR COUNTY FILE NUMBER	PLAN SET NO.	
Checked: JA	TEXAS		UTIL06	
Drawn: RG	COUNTY		OF	
Checked: JA	BEXAR		SHEET TOTAL	

pw:/Active Projects/BEX6102/8.00 Plans and Drawings/8.10 Cut Sheets/8.1.17 Bexar Met/6102CSROUT06.050

AS-BUILT/PLAN OF RECORD
SUBMITTED JULY 2011

THESE DOCUMENTS HAVE BEEN PREPARED BASED ON INFORMATION PROVIDED BY OTHERS. THOSE RELYING ON THIS RECORD DOCUMENT ARE ADVISED TO OBTAIN INDEPENDENT VERIFICATION OF ITS ACCURACY BEFORE APPLYING IT FOR ANY PURPOSE.

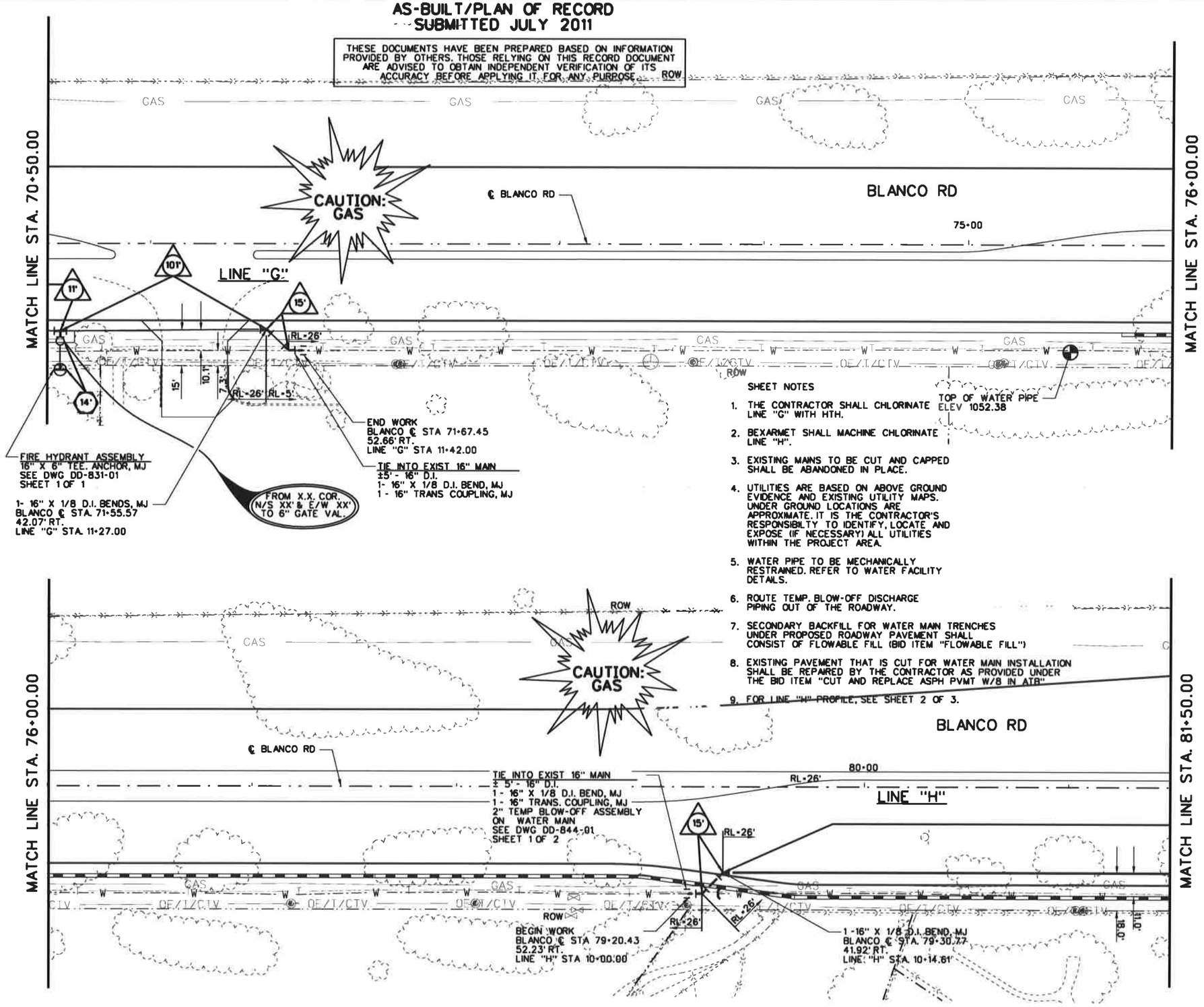

SHEET NOTES

1. THE CONTRACTOR SHALL CHLORINATE LINE "G" WITH HTH.
2. BEXARMET SHALL MACHINE CHLORINATE LINE "H".
3. EXISTING MAINS TO BE CUT AND CAPPED SHALL BE ABANDONED IN PLACE.
4. UTILITIES ARE BASED ON ABOVE GROUND EVIDENCE AND EXISTING UTILITY MAPS. UNDER GROUND LOCATIONS ARE APPROXIMATE. IT IS THE CONTRACTOR'S RESPONSIBILTY TO IDENTIFY, LOCATE AND EXPOSE (IF NECESSARY) ALL UTILITIES WITHIN THE PROJECT AREA.
5. WATER PIPE TO BE MECHANICALLY RESTRAINED. REFER TO WATER FACILITY DETAILS.
6. ROUTE TEMP. BLOW-OFF DISCHARGE PIPING OUT OF THE ROADWAY.
7. SECONDARY BACKFILL FOR WATER MAIN TRENCHES UNDER PROPOSED ROADWAY PAVEMENT SHALL CONSIST OF FLOWABLE FILL (BID ITEM "FLOWABLE FILL")
8. EXISTING PAVEMENT THAT IS CUT FOR WATER MAIN INSTALLATION SHALL BE REPAIRED BY THE CONTRACTOR AS PROVIDED UNDER THE BID ITEM "CUT AND REPLACE ASPH PVMT W/8 IN ATB"
9. FOR LINE "H" PROFILE, SEE SHEET 2 OF 3.

25 12.5 0 25 50
HORIZ. SCALE FEET

LEGEND

- MSE RETAINING WALL
- CAST-IN-PLACE RETAINING WALL
- SMALL METER
- LARGE METER
- REDUCER
- PROPOSED VALVE
- 2" AIR RELEASE VALVE
- FIRE HYDRANT
- LAND HOOK (COMMON OWNER)
- ORIGINAL PROPERTY LINE
- EASEMENT LINE
- EXISTING VALVE
- EXISTING METER

THE SEAL THAT ORIGINALLY APPEARED ON THIS DOCUMENT WAS AUTHORIZED BY: HUGO CABRERA TEXAS P. E. NO.: 98245 ON DATE 2/11/08 ALTERATION ON A SEALED DOCUMENT WITHOUT PROPER NOTIFICATION OF THE RESPONSIBLE ENGINEER IS AN OFFENSE UNDER THE TEXAS ENGINEERING PRACTICE ACT

NO.	REVISION	BY	DATE

BexarMet WATER DISTRICT

CP&Y Chiang, Patel & Yerby, Inc.

BEXAR COUNTY
PUBLIC WORKS DIVISION

F.M. 2696 (BLANCO ROAD)

WATER LINE
STA 70+50.00 TO STA 81+50.00

SHEET 7 OF 15

Designed: RG	STATE	BEXAR COUNTY FILE NUMBER	PLAN SET NO.
Checked: JA	TEXAS		UTIL07
Drawn: RG	COUNTY		OF
Checked: JA	BEXAR		SHEETTOTAL

pw:/Active Projects/BEX6102/8.02 Plans Drawings/8.10 Cut Sheets/8.1.17 Bexar Met/6102CSROUT07.dwg

AS-BUILT/PLAN OF RECORD
SUBMITTED JULY 2011

THESE DOCUMENTS HAVE BEEN PREPARED BASED ON INFORMATION PROVIDED BY OTHERS. THOSE RELYING ON THIS RECORD DOCUMENT ARE ADVISED TO OBTAIN INDEPENDENT VERIFICATION OF ITS ACCURACY BEFORE APPLYING IT FOR ANY PURPOSE.

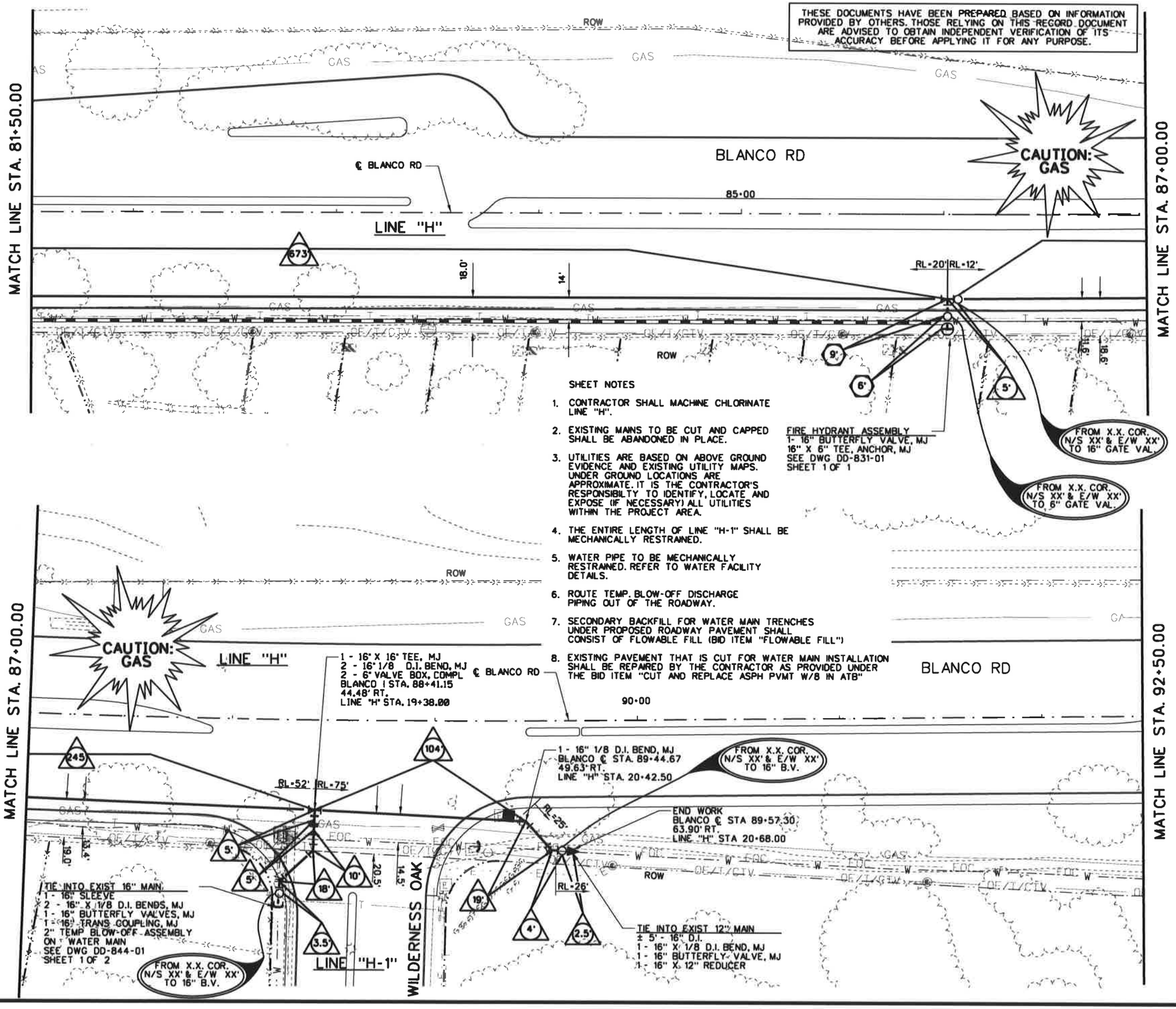

SHEET NOTES

1. CONTRACTOR SHALL MACHINE CHLORINATE LINE "H".
2. EXISTING MAINS TO BE CUT AND CAPPED SHALL BE ABANDONED IN PLACE.
3. UTILITIES ARE BASED ON ABOVE GROUND EVIDENCE AND EXISTING UTILITY MAPS. UNDER GROUND LOCATIONS ARE APPROXIMATE. IT IS THE CONTRACTOR'S RESPONSIBILTY TO IDENTIFY, LOCATE AND EXPOSE (IF NECESSARY) ALL UTILITIES WITHIN THE PROJECT AREA.
4. THE ENTIRE LENGTH OF LINE "H-1" SHALL BE MECHANICALLY RESTRAINED.
5. WATER PIPE TO BE MECHANICALLY RESTRAINED. REFER TO WATER FACILITY DETAILS.
6. ROUTE TEMP. BLOW-OFF DISCHARGE PIPING OUT OF THE ROADWAY.
7. SECONDARY BACKFILL FOR WATER MAIN TRENCHES UNDER PROPOSED ROADWAY PAVEMENT SHALL CONSIST OF FLOWABLE FILL (BID ITEM "FLOWABLE FILL")
8. EXISTING PAVEMENT THAT IS CUT FOR WATER MAIN INSTALLATION SHALL BE REPAIRED BY THE CONTRACTOR AS PROVIDED UNDER THE BID ITEM "CUT AND REPLACE ASPH PVMT W/8 IN ATB"

25 12.5 0 25 50
HORIZ. SCALE FEET

LEGEND

- MSE RETAINING WALL
- CAST-IN-PLACE RETAINING WALL
- SMALL METER
- LARGE METER
- REDUCER
- PROPOSED VALVE
- 2" AIR RELEASE VALVE
- FIRE HYDRANT
- LAND HOOK (COMMON OWNER)
- ORIGINAL PROPERTY LINE
- EASEMENT LINE
- EXISTING VALVE
- EXISTING METER

THE SEAL THAT ORIGINALLY APPEARED ON THIS DOCUMENT WAS AUTHORIZED BY: HUGO CABRERA TEXAS P. E. NO.: 98245 ON DATE 2/11/08 ALTERATION ON A SEALED DOCUMENT WITHOUT PROPER NOTIFICATION OF THE RESPONSIBLE ENGINEER IS AN OFFENSE UNDER THE TEXAS ENGINEERING PRACTICE ACT

NO.	REVISION	BY	DATE

BexarMet WATER DISTRICT

CP&Y Chiang, Patel & Yerby, Inc.

BEXAR COUNTY PUBLIC WORKS DIVISION

F.M. 2696 (BLANCO ROAD)

WATER LINE

STA 81+50.00 TO STA 92+50.00

SHEET 8 OF 15

Designed: RG	STATE	BEXAR COUNTY FILE NUMBER	PLAN SET NO.
Checked: JA	TEXAS		UTIL08
Drawn: RG	COUNTY		OF
Checked: JA	BEXAR		SHEET TOTAL

pw:/Active Projects/BEX6102/8.05-Plans and Drawings/8.10 Cut Sheets/8.117 Bexar Met/6102CSROUT08.050

SHEET NOTES

1. CONTRACTOR SHALL CHLORINATE LINE "I" WITH HTH.
2. EXISTING MAINS TO BE CUT AND CAPPED SHALL BE ABANDONED IN PLACE.
3. UTILITIES ARE BASED ON ABOVE GROUND EVIDENCE AND EXISTING UTILITY MAPS. UNDER GROUND LOCATIONS ARE APPROXIMATE. IT IS THE CONTRACTOR'S RESPONSIBILTY TO IDENTIFY, LOCATE AND EXPOSE (IF NECESSARY) ALL UTILITIES WITHIN THE PROJECT AREA.
4. WATER PIPE TO BE MECHANICALLY RESTRAINED. REFER TO WATER FACILITY DETAILS.
5. ROUTE TEMP. BLOW-OFF DISCHARGE PIPING OUT OF THE ROADWAY.
6. SECONDARY BACKFILL FOR WATER MAIN TRENCHES UNDER PROPOSED ROADWAY PAVEMENT SHALL CONSIST OF FLOWABLE FILL (BID ITEM "FLOWABLE FILL")
7. EXISTING PAVEMENT THAT IS CUT FOR WATER MAIN INSTALLATION SHALL BE REPAIRED BY THE CONTRACTOR AS PROVIDED UNDER THE BID ITEM "CUT AND REPLACE ASPH PVMT W/8 IN ATB"
8. FOR LINE "I" PROFILE SEE SHEET 2 OF 3.

AS-BUILT/PLAN OF RECORD
SUBMITTED JULY 2011

THESE DOCUMENTS HAVE BEEN PREPARED BASED ON INFORMATION PROVIDED BY OTHERS. THOSE RELYING ON THIS RECORD DOCUMENT ARE ADVISED TO OBTAIN INDEPENDENT VERIFICATION OF ITS ACCURACY BEFORE APPLYING IT FOR ANY PURPOSE.

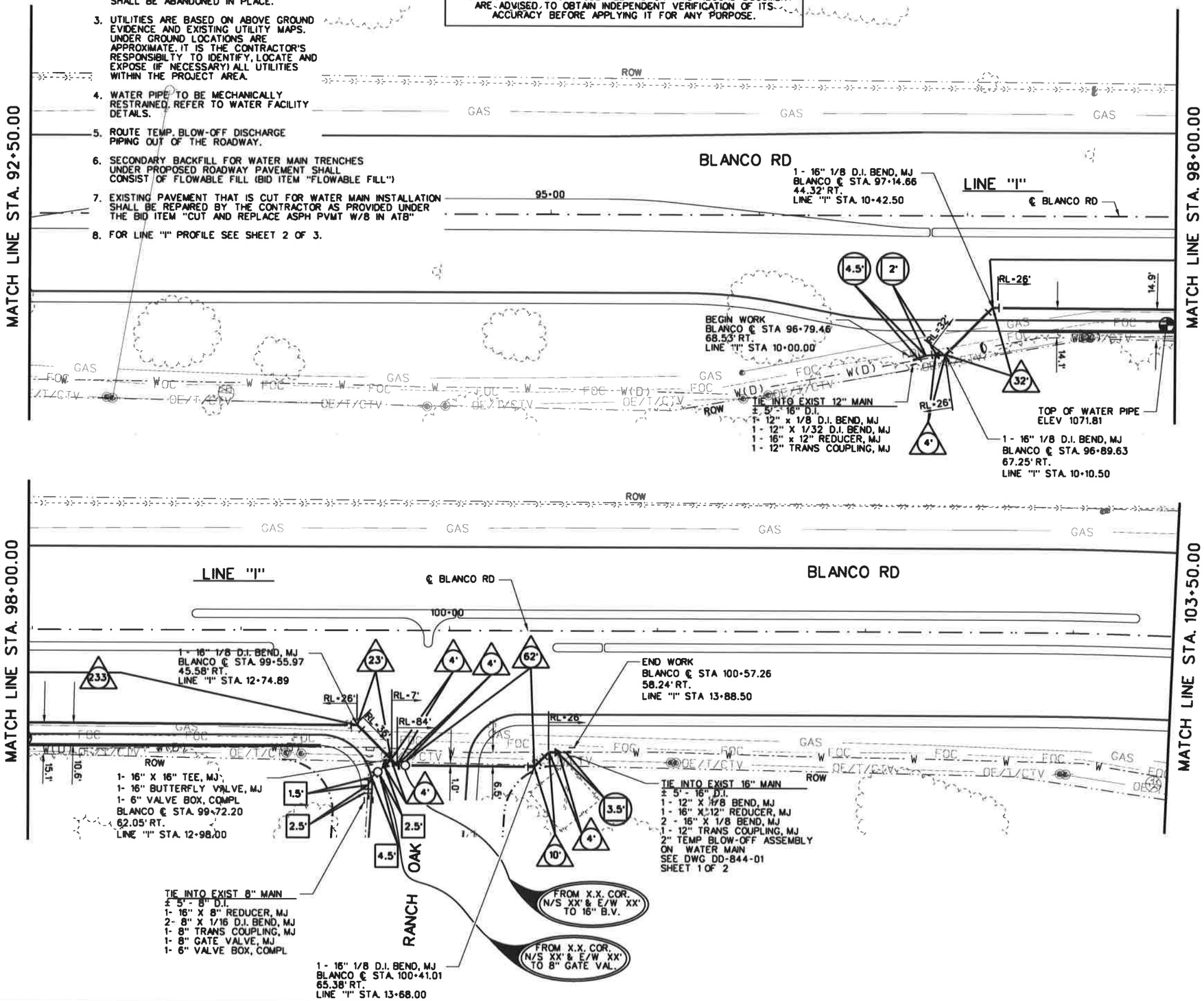

25 12.5 0 25 50
HORIZ. SCALE FEET

LEGEND

- MSE RETAINING WALL
- CAST-IN-PLACE RETAINING WALL
- SMALL METER
- LARGE METER
- REDUCER
- PROPOSED VALVE
- 2" AIR RELEASE VALVE
- FIRE HYDRANT
- LAND HOOK (COMMON OWNER)
- ORIGINAL PROPERTY LINE
- EASEMENT LINE
- EXISTING VALVE
- EXISTING METER

THE SEAL THAT ORIGINALLY APPEARED ON THIS DOCUMENT WAS AUTHORIZED BY: HUGO CABRERA TEXAS P. E. NO.: 98245 ON DATE 2/11/08 ALTERATION ON A SEALED DOCUMENT WITHOUT PROPER NOTIFICATION OF THE RESPONSIBLE ENGINEER IS AN OFFENSE UNDER THE TEXAS ENGINEERING PRACTICE ACT

NO.	REVISION	BY	DATE

BexarMet WATER DISTRICT

CP&Y Chiang, Patel & Yerby, Inc.

BEXAR COUNTY PUBLIC WORKS DIVISION

F.M. 2696 (BLANCO ROAD)

WATER LINE

STA 92+50.00 TO STA 103+50.00

SHEET 9 OF 15

Designed: RG	STATE	BEXAR COUNTY FILE NUMBER	PLAN SET NO.	
Checked: JA	TEXAS		UTIL09	
Drawn: RG	COUNTY		OF	
Checked: JA	BEXAR		SHEET TOTAL	

pw:/Active Projects/BEX6102/6.00-Design/Drawings/6.10 Cut Sheets/6.1.17 Bexar Met/6102CSRDUT09.dgn

NO WATERLINE
RELOCATION ON THIS SHEET

AS-BUILT/PLAN OF RECORD
SUBMITTED JULY 2011

THESE DOCUMENTS HAVE BEEN PREPARED BASED ON INFORMATION PROVIDED BY OTHERS. THOSE RELYING ON THIS RECORD DOCUMENT ARE ADVISED TO OBTAIN INDEPENDENT VERIFICATION OF ITS ACCURACY BEFORE APPLYING IT FOR ANY PURPOSE.

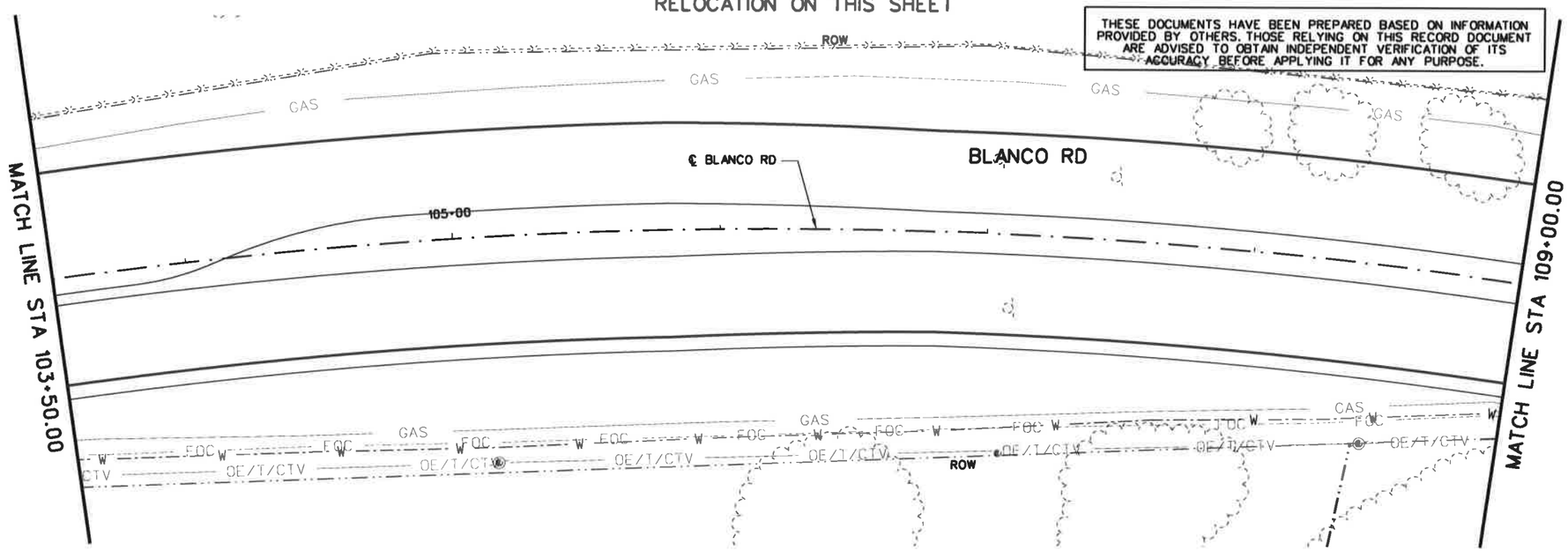

NO WATERLINE
RELOCATION ON THIS SHEET

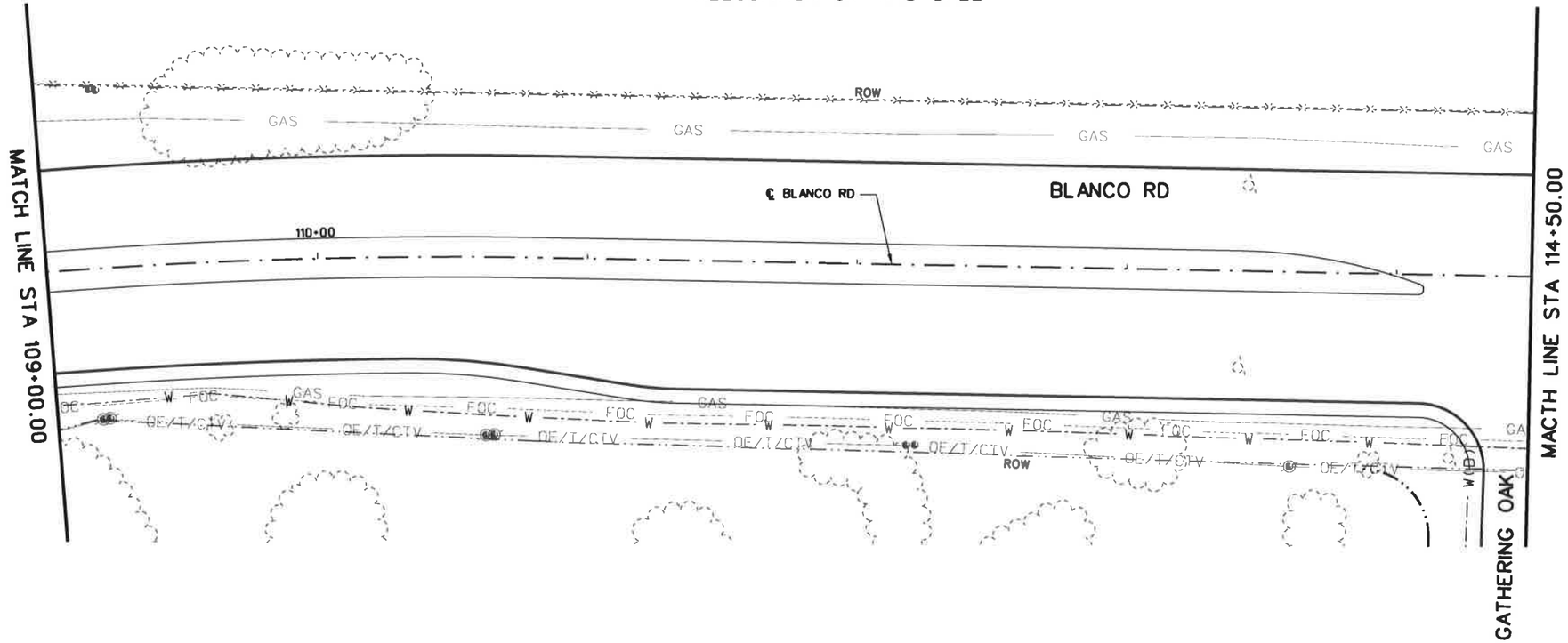

25 12.5 0 25 50
HORIZ. SCALE FEET

LEGEND

- MSE RETAINING WALL
- CAST-IN-PLACE RETAINING WALL
- SMALL METER
- LARGE METER
- REDUCER
- PROPOSED VALVE
- 2" AIR RELEASE VALVE
- FIRE HYDRANT
- LAND HOOK (COMMON OWNER)
- ORIGINAL PROPERTY LINE
- EASEMENT LINE
- EXISTING VALVE
- EXISTING METER

THE SEAL THAT ORIGINALLY APPEARED ON THIS DOCUMENT WAS AUTHORIZED BY: HUGO CABRERA TEXAS P. E. NO.: 98245 ON DATE 2/11/08 ALTERATION ON A SEALED DOCUMENT WITHOUT PROPER NOTIFICATION OF THE RESPONSIBLE ENGINEER IS AN OFFENSE UNDER THE TEXAS ENGINEERING PRACTICE ACT

NO.	REVISION	BY	DATE

BexarMet WATER DISTRICT

CP&Y Chiang, Patel & Yerby, Inc.

BEXAR COUNTY
PUBLIC WORKS DIVISION

F.M. 2696 (BLANCO ROAD)

WATER LINE
STA 103+50.00 TO STA 114+50.00

SHEET 10 OF 15

Designed: RG	STATE	BEXAR COUNTY FILE NUMBER	PLAN SET NO.
Checked: JA	TEXAS		UTIL10
Drawn: RG	COUNTY		OF
Checked: JA	BEXAR		SHEET TOTAL

pw:/Active Projects/BEX6102/8.03-Blanco Drawings/8.10 Cut Sheets/8.1.17 Bexar Met/6102CSROUT10.dwg

AS-BUILT/PLAN OF RECORD
SUBMITTED JULY 2011

THESE DOCUMENTS HAVE BEEN PREPARED BASED ON INFORMATION PROVIDED BY OTHERS. THOSE RELYING ON THIS RECORD DOCUMENT ARE ADVISED TO OBTAIN INDEPENDENT VERIFICATION OF ITS ACCURACY BEFORE APPLYING IT FOR ANY PURPOSE.

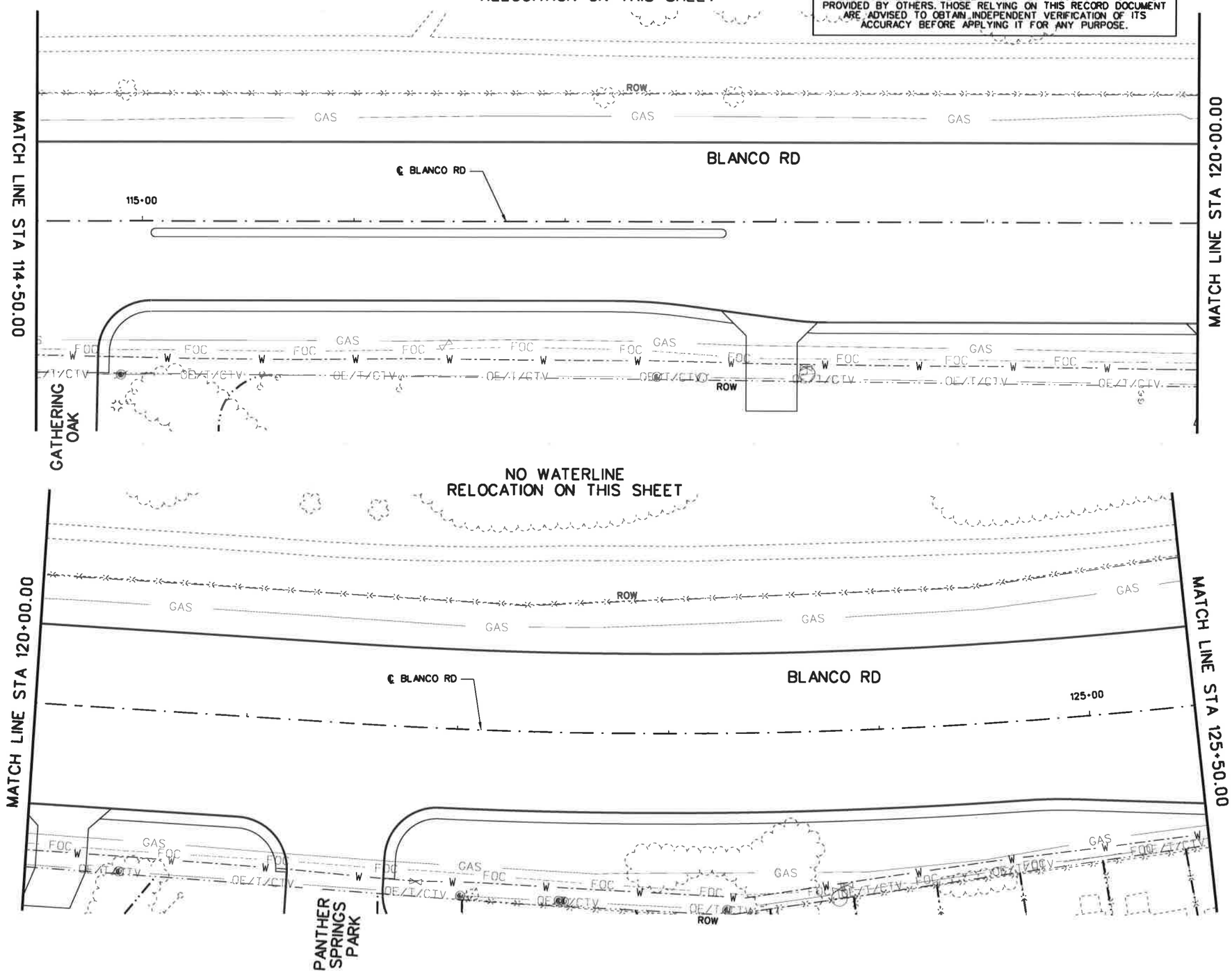

25 12.5 0 25 50
HORIZ. SCALE FEET

LEGEND

- MSE RETAINING WALL
- CAST-IN-PLACE RETAINING WALL
- SMALL METER
- LARGE METER
- REDUCER
- PROPOSED VALVE
- AR 2" AIR RELEASE VALVE
- FIRE HYDRANT
- LAND HOOK (COMMON OWNER)
- ORIGINAL PROPERTY LINE
- EASEMENT LINE
- EXISTING VALVE
- M EXISTING METER

THE SEAL THAT ORIGINALLY APPEARED ON THIS DOCUMENT WAS AUTHORIZED BY: HUGO CABRERA TEXAS P. E. NO.: 98245 ON DATE 2/11/08 ALTERATION ON A SEALED DOCUMENT WITHOUT PROPER NOTIFICATION OF THE RESPONSIBLE ENGINEER IS AN OFFENSE UNDER THE TEXAS ENGINEERING PRACTICE ACT

NO.	REVISION	BY	DATE

BexarMet WATER DISTRICT

CP&Y Chiang, Patel & Yerby, Inc.

BEXAR COUNTY PUBLIC WORKS DIVISION

F.M. 2696 (BLANCO ROAD)

WATER LINE

STA 114+50.00 TO STA 125+50.00

SHEET 11 OF 15

Designed: RG	STATE	BEXAR COUNTY FILE NUMBER	PLAN SET NO.
Checked: JA	TEXAS		UTIL11
Drawn: RG	COUNTY		OF
Checked: JA	BEXAR		SHEETTOTAL

pw:/Active Projects/BEX6102/8.02 Drawings/8.10 Cut Sheets/8.1.17 Bexar Met/6102CSROUT11.050

SHEET NOTES

1. CONTRACTOR SHALL CHLORINATE LINE "J" WITH HTH.
2. EXISTING MAINS TO BE CUT AND CAPPED SHALL BE ABANDONED IN PLACE.
3. UTILITIES ARE BASED ON ABOVE GROUND EVIDENCE AND EXISTING UTILITY MAPS. UNDER GROUND LOCATIONS ARE APPROXIMATE. IT IS THE CONTRACTOR'S RESPONSIBILTY TO IDENTIFY, LOCATE AND EXPOSE (IF NECESSARY) ALL UTILITIES WITHIN THE PROJECT AREA.
4. THE ENTIRE LENGTH OF LINE "J" SHALL BE RESTRAINED.
5. ROUTE TEMP. BLOW-OFF DISCHARGE PIPING OUT OF THE ROADWAY.
6. SECONDARY BACKFILL FOR WATER MAIN TRENCHES UNDER PROPOSED ROADWAY PAVEMENT SHALL CONSIST OF FLOWABLE FILL (BID ITEM "FLOWABLE FILL")
7. EXISTING PAVEMENT THAT IS CUT FOR WATER MAIN INSTALLATION SHALL BE REPAIRED BY THE CONTRACTOR AS PROVIDED UNDER THE BID ITEM "CUT AND REPLACE ASPH PVMT W/8 IN ATB"

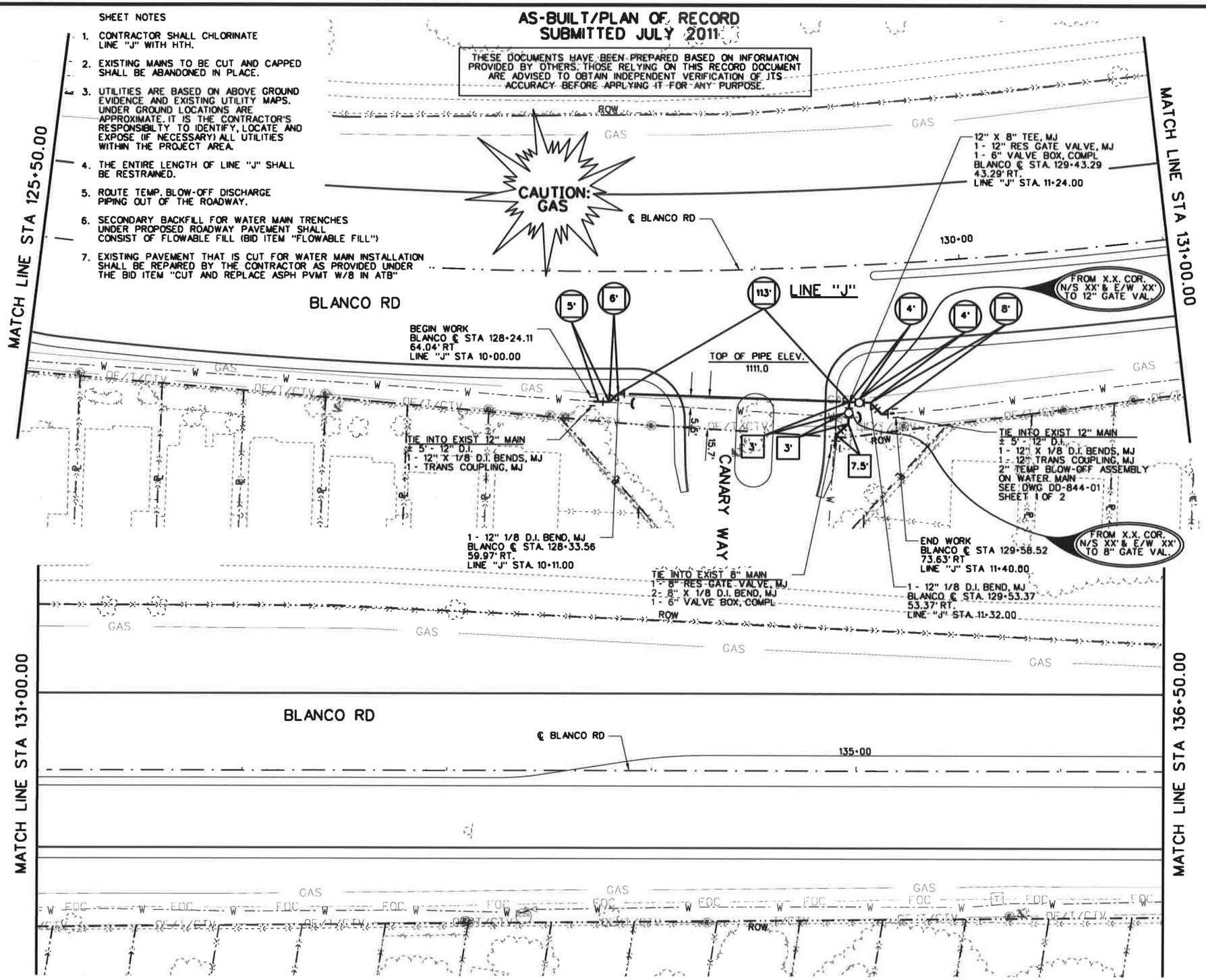

25 12.5 0 25 50
HORIZ. SCALE FEET

LEGEND

- MSE RETAINING WALL
- CAST-IN-PLACE RETAINING WALL
- SMALL METER
- LARGE METER
- REDUCER
- PROPOSED VALVE
- 2" AIR RELEASE VALVE
- FIRE HYDRANT
- LAND HOOK (COMMON OWNER)
- ORIGINAL PROPERTY LINE
- EASEMENT LINE
- EXISTING VALVE
- EXISTING METER

THE SEAL THAT ORIGINALLY APPEARED ON THIS DOCUMENT WAS AUTHORIZED BY: HUGO CABRERA TEXAS P. E. NO.: 98245 ON DATE 2/11/08 ALTERATION ON A SEALED DOCUMENT WITHOUT PROPER NOTIFICATION OF THE RESPONSIBLE ENGINEER IS AN OFFENSE UNDER THE TEXAS ENGINEERING PRACTICE ACT

NO.	REVISION	BY	DATE

BexarMet WATER DISTRICT

CP&Y Chiang, Patel & Yerby, Inc.

BEXAR COUNTY PUBLIC WORKS DIVISION

F.M. 2696 (BLANCO ROAD)

WATER LINE

STA 125+50.00 TO STA 136+50.00

SHEET 12 OF 15

Designed: RG	STATE	BEXAR COUNTY FILE NUMBER	PLAN SET NO.
Checked: JA	TEXAS		521-A1
Drawn: RG	COUNTY		OF
Checked: JA	BEXAR		SHEETTOTAL

pw:/Active Projects/BEX6102/8.002-Plans and Drawings/8.10 Cut Sheets/8.1.17 Bexar Met/6102CSRDUT12.050

SHEET NOTES

1. CONTRACTOR SHALL CHLORINATE LINE "K" WITH HTH.
2. EXISTING MAINS TO BE CUT AND CAPPED SHALL BE ABANDONED IN PLACE.
3. UTILITIES ARE BASED ON ABOVE GROUND EVIDENCE AND EXISTING UTILITY MAPS. UNDER GROUND LOCATIONS ARE APPROXIMATE. IT IS THE CONTRACTOR'S RESPONSIBILTY TO IDENTIFY, LOCATE AND EXPOSE (IF NECESSARY) ALL UTILITIES WITHIN THE PROJECT AREA.
4. WATER PIPE TO BE MECHANICALLY RESTRAINED. REFER TO WATER FACILITY DETAILS.
5. ROUTE TEMP. BLOW-OFF DISCHARGE PIPING OUT OF THE ROADWAY.
6. SECONDARY BACKFILL FOR WATER MAIN TRENCHES UNDER PROPOSED ROADWAY PAVEMENT SHALL CONSIST OF FLOWABLE FILL (BID ITEM "FLOWABLE FILL")
7. EXISTING PAVEMENT THAT IS CUT FOR WATER MAIN INSTALLATION SHALL BE REPAIRED BY THE CONTRACTOR AS PROVIDED UNDER THE BID ITEM "CUT AND REPLACE ASPH PVMT W/8 IN ATB"

AS-BUILT/PLAN OF RECORD
SUBMITTED JULY 2011

THESE DOCUMENTS HAVE BEEN PREPARED BASED ON INFORMATION PROVIDED BY OTHERS. THOSE RELYING ON THIS RECORD DOCUMENT ARE ADVISED TO OBTAIN INDEPENDENT VERIFICATION OF ITS ACCURACY BEFORE APPLYING IT FOR ANY PURPOSE.

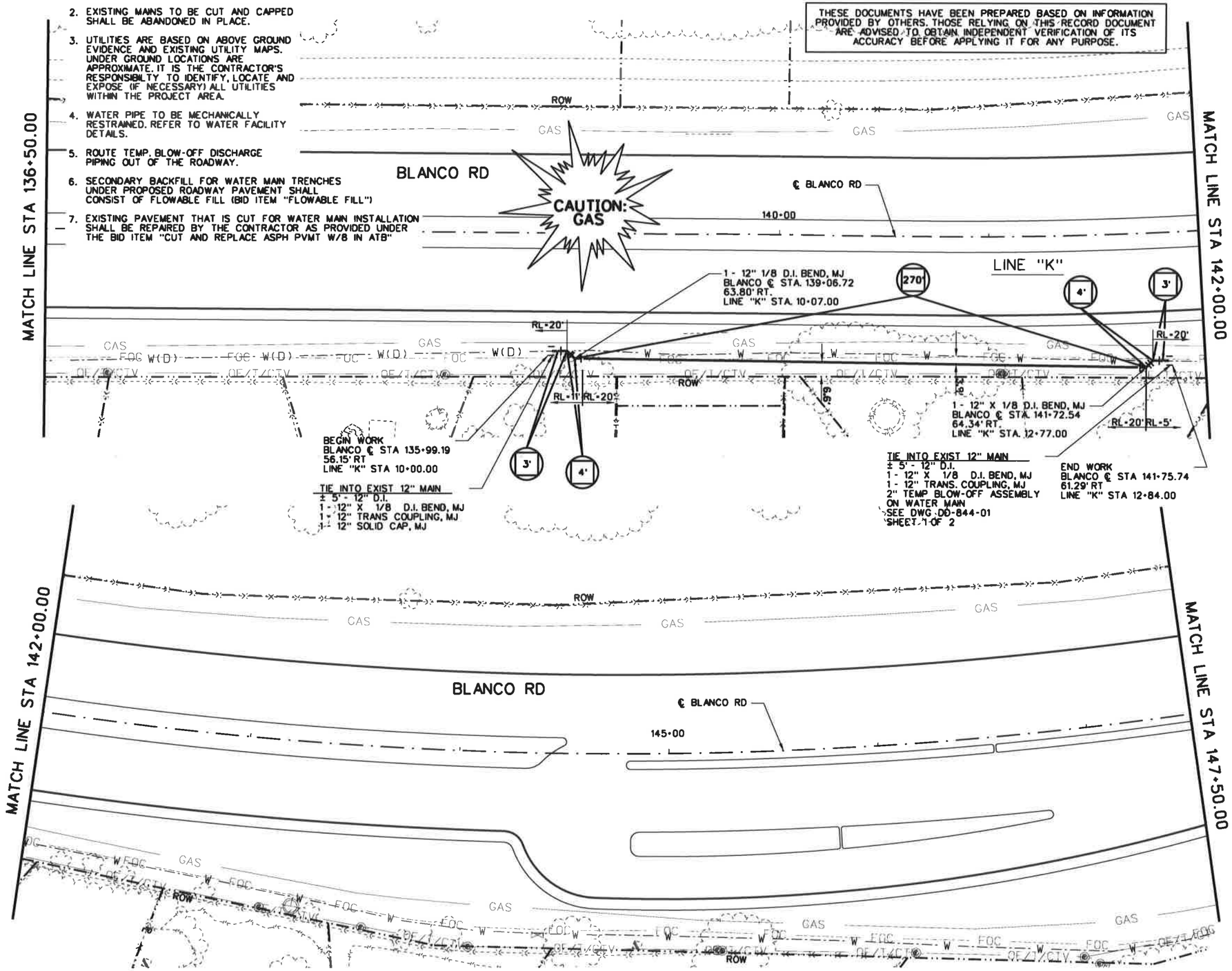

LEGEND

- MSE RETAINING WALL
- CAST-IN-PLACE RETAINING WALL
- SMALL METER
- LARGE METER
- REDUCER
- PROPOSED VALVE
- 2" AIR RELEASE VALVE
- FIRE HYDRANT
- LAND HOOK (COMMON OWNER)
- ORIGINAL PROPERTY LINE
- EASEMENT LINE
- EXISTING VALVE
- EXISTING METER

THE SEAL THAT ORIGINALLY APPEARED ON THIS DOCUMENT WAS AUTHORIZED BY: HUGO CABRERA TEXAS P. E. NO.: 98245 ON DATE 2/11/08 ALTERATION ON A SEALED DOCUMENT WITHOUT PROPER NOTIFICATION OF THE RESPONSIBLE ENGINEER IS AN OFFENSE UNDER THE TEXAS ENGINEERING PRACTICE ACT

NO.	REVISION	BY	DATE

BexarMet WATER DISTRICT

CP&Y Chiang, Patel & Yerby, Inc.

BEXAR COUNTY PUBLIC WORKS DIVISION

F.M. 2696 (BLANCO ROAD)

WATER LINE

STA 136+50.00 TO STA 147+50.00

SHEET 13 OF 15

Designed: RG	STATE	BEXAR COUNTY FILE NUMBER	PLAN SET NO.	
Checked: JA	TEXAS		UTIL13	
Drawn: RG	COUNTY		OF	
Checked: JA	BEXAR	2708-01-022, ETC.	SHEET	TOTAL

pw:/Active Projects/BEX6102/8.02-Plans and Drawings/8.10 Cut Sheets/8.1.17 Bexar Met/6102CSROUT13.dgn

AS-BUILT/PLAN OF RECORD
SUBMITTED JULY 2011

THESE DOCUMENTS HAVE BEEN PREPARED BASED ON INFORMATION PROVIDED BY OTHERS. THOSE RELYING ON THIS RECORD DOCUMENT ARE ADVISED TO OBTAIN INDEPENDENT VERIFICATION OF ITS ACCURACY BEFORE APPLYING IT FOR ANY PURPOSE.

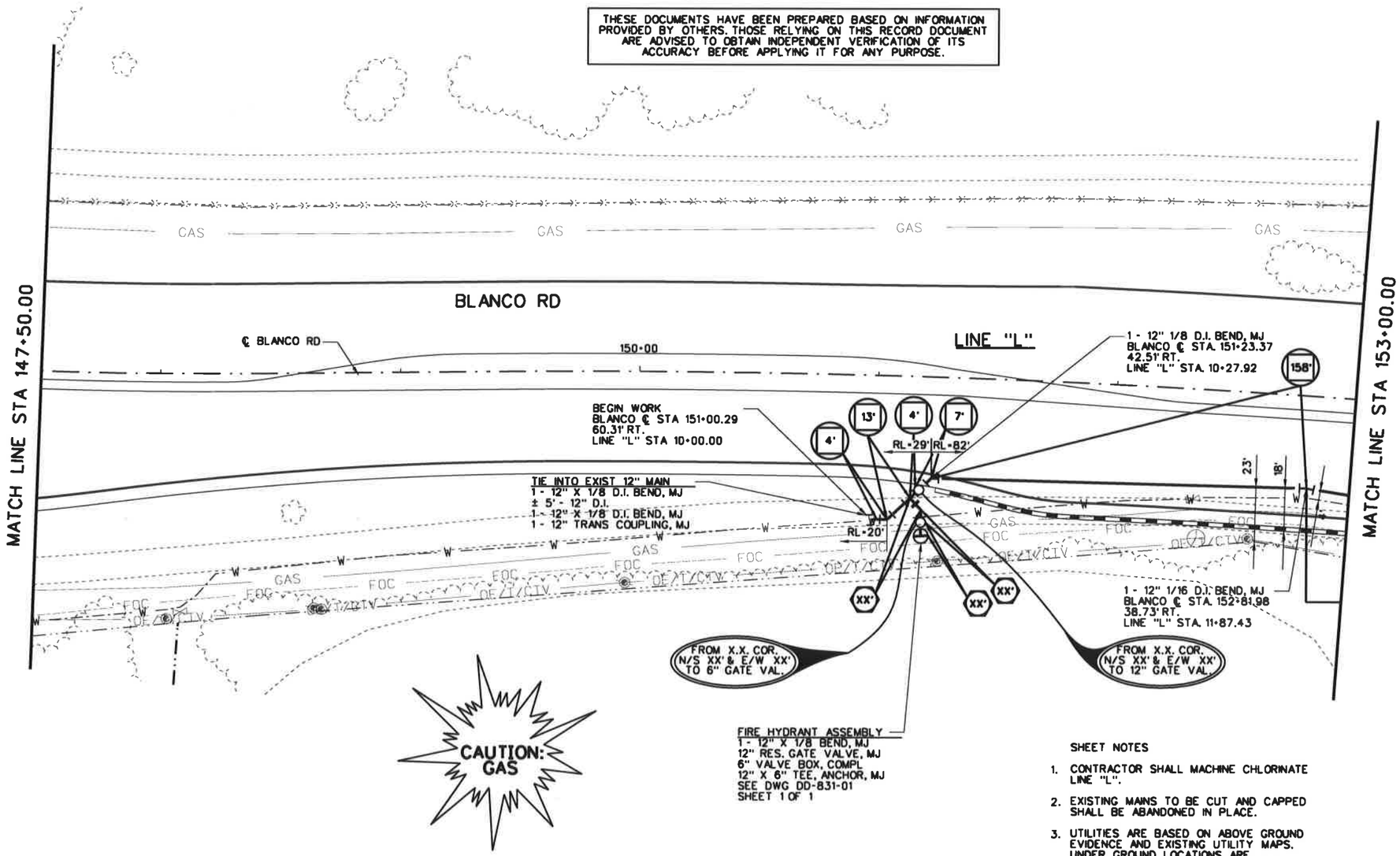

25 12.5 0 25 50
HORIZ. SCALE FEET

LEGEND

- MSE RETAINING WALL
- CAST-IN-PLACE RETAINING WALL
- SMALL METER
- LARGE METER
- REDUCER
- PROPOSED VALVE
- 2" AIR RELEASE VALVE
- FIRE HYDRANT
- LAND HOOK (COMMON OWNER)
- ORIGINAL PROPERTY LINE
- EASEMENT LINE
- EXISTING VALVE
- EXISTING METER

SHEET NOTES

1. CONTRACTOR SHALL MACHINE CHLORINATE LINE "L".
2. EXISTING MAINS TO BE CUT AND CAPPED SHALL BE ABANDONED IN PLACE.
3. UTILITIES ARE BASED ON ABOVE GROUND EVIDENCE AND EXISTING UTILITY MAPS. UNDER GROUND LOCATIONS ARE APPROXIMATE. IT IS THE CONTRACTOR'S RESPONSIBILTY TO IDENTIFY, LOCATE AND EXPOSE (IF NECESSARY) ALL UTILITIES WITHIN THE PROJECT AREA.
4. WATER PIPE TO BE MECHANICALLY RESTRAINED. REFER TO WATER FACILITY DETAILS.
5. ROUTE TEMP. BLOW-OFF DISCHARGE PIPING OUT OF THE ROADWAY.
6. SECONDARY BACKFILL FOR WATER MAIN TRENCHES UNDER PROPOSED ROADWAY PAVEMENT SHALL CONSIST OF FLOWABLE FILL (BID ITEM "FLOWABLE FILL")
7. EXISTING PAVEMENT THAT IS CUT FOR WATER MAIN INSTALLATION SHALL BE REPAIRED BY THE CONTRACTOR AS PROVIDED UNDER THE BID ITEM "CUT AND REPLACE ASPH PVMT W/8 IN ATB"
8. FOR LINE "L" PROFILE, SEE SHEET 3 OF 3.

THE SEAL THAT ORIGINALLY APPEARED ON THIS DOCUMENT WAS AUTHORIZED BY: HUGO CABRERA TEXAS P. E. NO.: 98245 ON DATE 2/11/08 ALTERATION ON A SEALED DOCUMENT WITHOUT PROPER NOTIFICATION OF THE RESPONSIBLE ENGINEER IS AN OFFENSE UNDER THE TEXAS ENGINEERING PRACTICE ACT

NO.	REVISION	BY	DATE

BexarMet WATER DISTRICT

CP&Y Chiang, Patel & Yerby, Inc.

BEXAR COUNTY PUBLIC WORKS DIVISION

F.M. 2696 (BLANCO ROAD)

WATER LINE

STA 147+50.00 TO STA 153+00.00

SHEET 14 OF 15

Designed: RG	STATE	BEXAR COUNTY FILE NUMBER	PLAN SET NO.
Checked: JA	TEXAS		UTIL14
Drawn: RG	COUNTY		OF
Checked: JA	BEXAR		SHEETTOTAL

pw:/Active Projects/BEX6102/8.00 Plans/Drawings/8.10 Cut Sheets/8.1.17 Bexar Met/6102CSROUT14.050

AS-BUILT/PLAN OF RECORD
SUBMITTED JULY 2011

THESE DOCUMENTS HAVE BEEN PREPARED BASED ON INFORMATION PROVIDED BY OTHERS. THOSE RELYING ON THIS RECORD DOCUMENT ARE ADVISED TO OBTAIN INDEPENDENT VERIFICATION OF ITS ACCURACY BEFORE APPLYING IT FOR ANY PURPOSE.

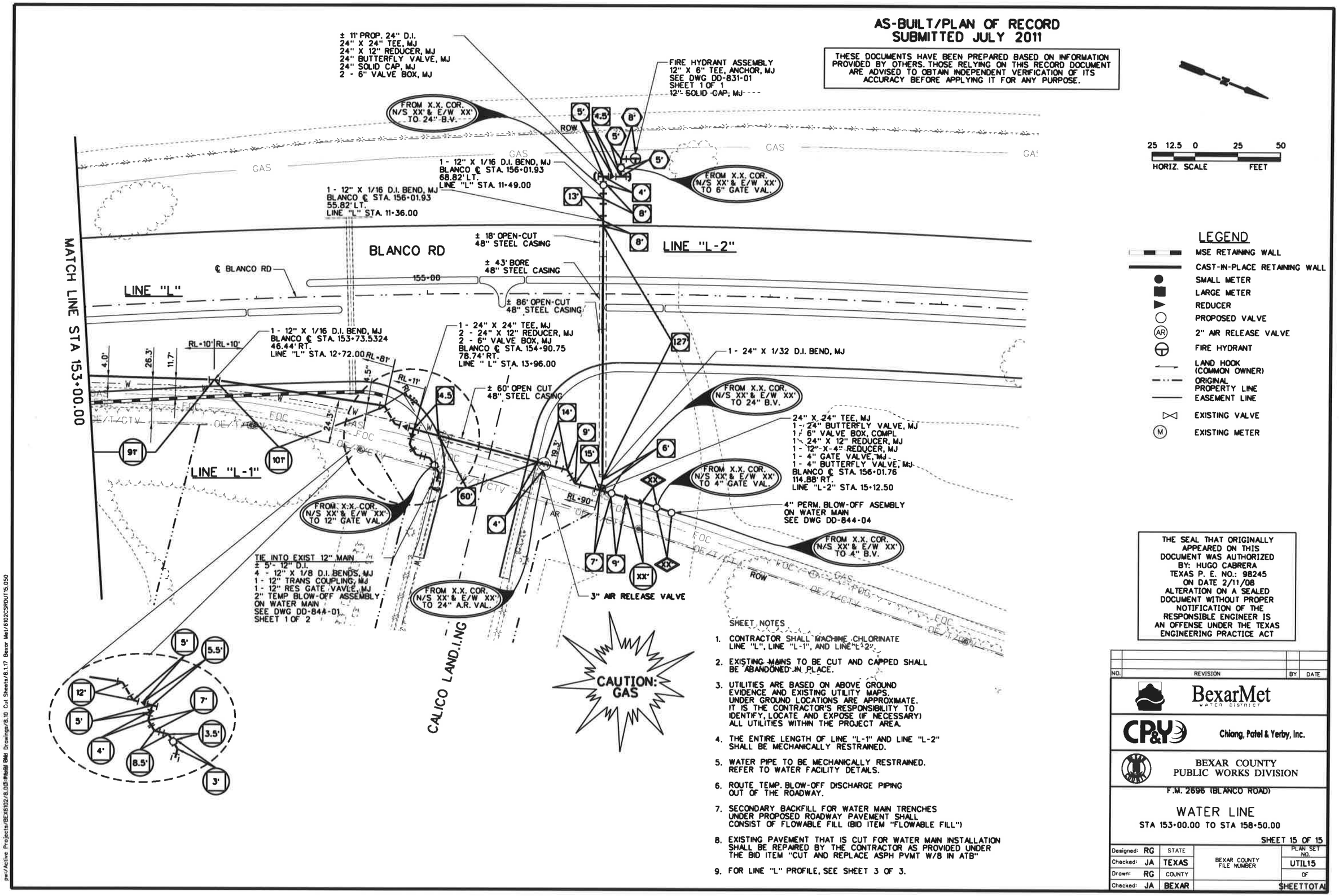

LEGEND

- MSE RETAINING WALL
- CAST-IN-PLACE RETAINING WALL
- SMALL METER
- LARGE METER
- REDUCER
- PROPOSED VALVE
- 2" AIR RELEASE VALVE
- FIRE HYDRANT
- LAND HOOK (COMMON OWNER)
- ORIGINAL PROPERTY LINE
- EASEMENT LINE
- EXISTING VALVE
- EXISTING METER

SHEET NOTES

1. CONTRACTOR SHALL MACHINE CHLORINATE LINE "L", LINE "L-1", AND LINE "L-2".
2. EXISTING MAINS TO BE CUT AND CAPPED SHALL BE ABANDONED IN PLACE.
3. UTILITIES ARE BASED ON ABOVE GROUND EVIDENCE AND EXISTING UTILITY MAPS. UNDER GROUND LOCATIONS ARE APPROXIMATE. IT IS THE CONTRACTOR'S RESPONSIBILITY TO IDENTIFY, LOCATE AND EXPOSE (IF NECESSARY) ALL UTILITIES WITHIN THE PROJECT AREA.
4. THE ENTIRE LENGTH OF LINE "L-1" AND LINE "L-2" SHALL BE MECHANICALLY RESTRAINED.
5. WATER PIPE TO BE MECHANICALLY RESTRAINED. REFER TO WATER FACILITY DETAILS.
6. ROUTE TEMP. BLOW-OFF DISCHARGE PIPING OUT OF THE ROADWAY.
7. SECONDARY BACKFILL FOR WATER MAIN TRENCHES UNDER PROPOSED ROADWAY PAVEMENT SHALL CONSIST OF FLOWABLE FILL (BID ITEM "FLOWABLE FILL")
8. EXISTING PAVEMENT THAT IS CUT FOR WATER MAIN INSTALLATION SHALL BE REPAIRED BY THE CONTRACTOR AS PROVIDED UNDER THE BID ITEM "CUT AND REPLACE ASPH PVMT W/8 IN ATB"
9. FOR LINE "L" PROFILE, SEE SHEET 3 OF 3.

THE SEAL THAT ORIGINALLY APPEARED ON THIS DOCUMENT WAS AUTHORIZED BY: HUGO CABRERA TEXAS P. E. NO.: 98245 ON DATE 2/11/08 ALTERATION ON A SEALED DOCUMENT WITHOUT PROPER NOTIFICATION OF THE RESPONSIBLE ENGINEER IS AN OFFENSE UNDER THE TEXAS ENGINEERING PRACTICE ACT

NO.	REVISION	BY	DATE

BexarMet WATER DISTRICT

CP&Y Chiang, Patel & Yerby, Inc.

BEXAR COUNTY PUBLIC WORKS DIVISION

F.M. 2696 (BLANCO ROAD)

WATER LINE

STA 153+00.00 TO STA 158+50.00

SHEET 15 OF 15

Designed: RG	STATE	BEXAR COUNTY FILE NUMBER	PLAN SET NO.
Checked: JA	TEXAS		UTIL15
Drawn: RG	COUNTY		OF
Checked: JA	BEXAR		SHEETTOTAL

pw:/Active Projects/BEX6102/8.05-Final Bid Drawings/8.10 Cut Sheets/8.1.17 Bexar Met/6102CSRDUT15.050

AS-BUILT/PLAN OF RECORD
SUBMITTED JULY 2011

THESE DOCUMENTS HAVE BEEN PREPARED BASED ON INFORMATION PROVIDED BY OTHERS. THOSE RELYING ON THIS RECORD DOCUMENT ARE ADVISED TO OBTAIN INDEPENDENT VERIFICATION OF ITS ACCURACY BEFORE APPLYING IT FOR ANY PURPOSE.

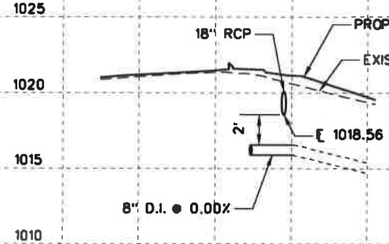

LINE "A-2"
SHOWN ON SHEET 1 OF 15

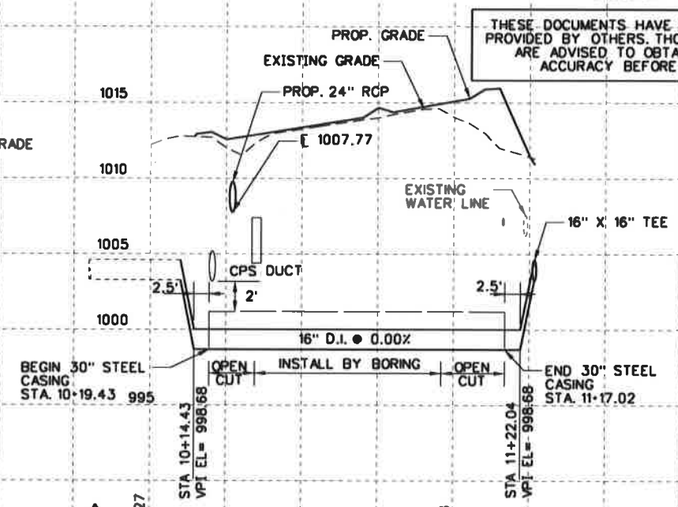

LINE "A-1"
SHOWN ON SHEET 1 OF 15

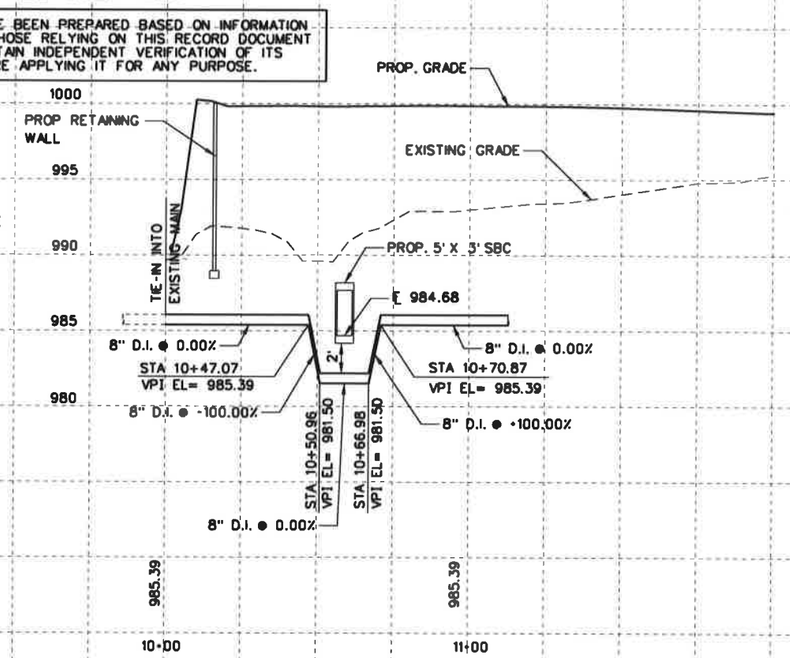

LINE "B"
SHOWN ON SHEET 2 OF 15

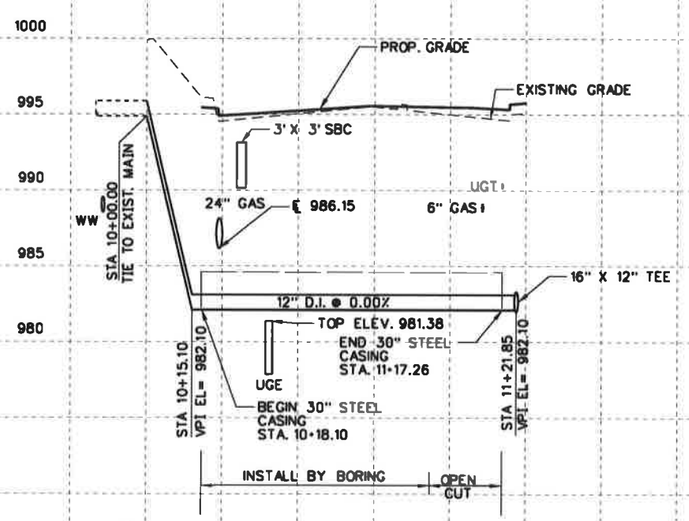

LINE "D"
SHOWN ON SHEET 3 OF 15

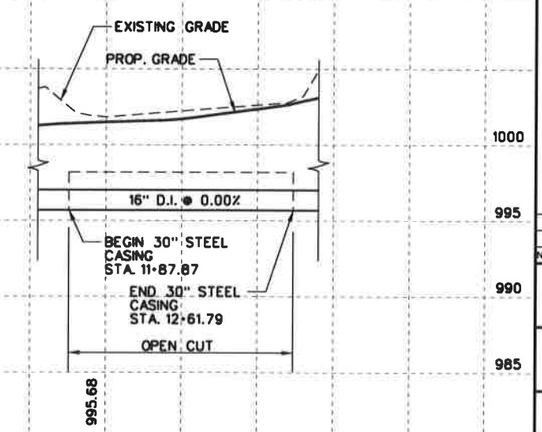

LINE "E"
SHOWN ON SHEET 4 OF 15

25 12.5 0 25 50
SCALE FEET
HORIZ. SCALE

5 2.5 0 5 10
SCALE FEET
VERT. SCALE

NO.	REVISION	BY	DATE

BexarMet WATER DISTRICT

CP&Y Chiang, Patel & Yerby, Inc.

BEXAR COUNTY PUBLIC WORKS DIVISION

F.M. 2696 (BLANCO ROAD)

WATER LINE PROFILES

SHEET 1 OF 3

Designed: RG	STATE	BEXAR COUNTY FILE NUMBER	PLAN SET NO.
Checked: HC	TEXAS		UTTP06
Drawn: RG	COUNTY		OF
Checked: HC	BEXAR	2708-01-022, ETC.	SHEETTOTAL

pw:/Active Projects/BEX6102/8.02-Blanco Drawings/8.10 Cut Sheets/8.1.17 Bexar Met/6102CSUTPRODET01.DGN

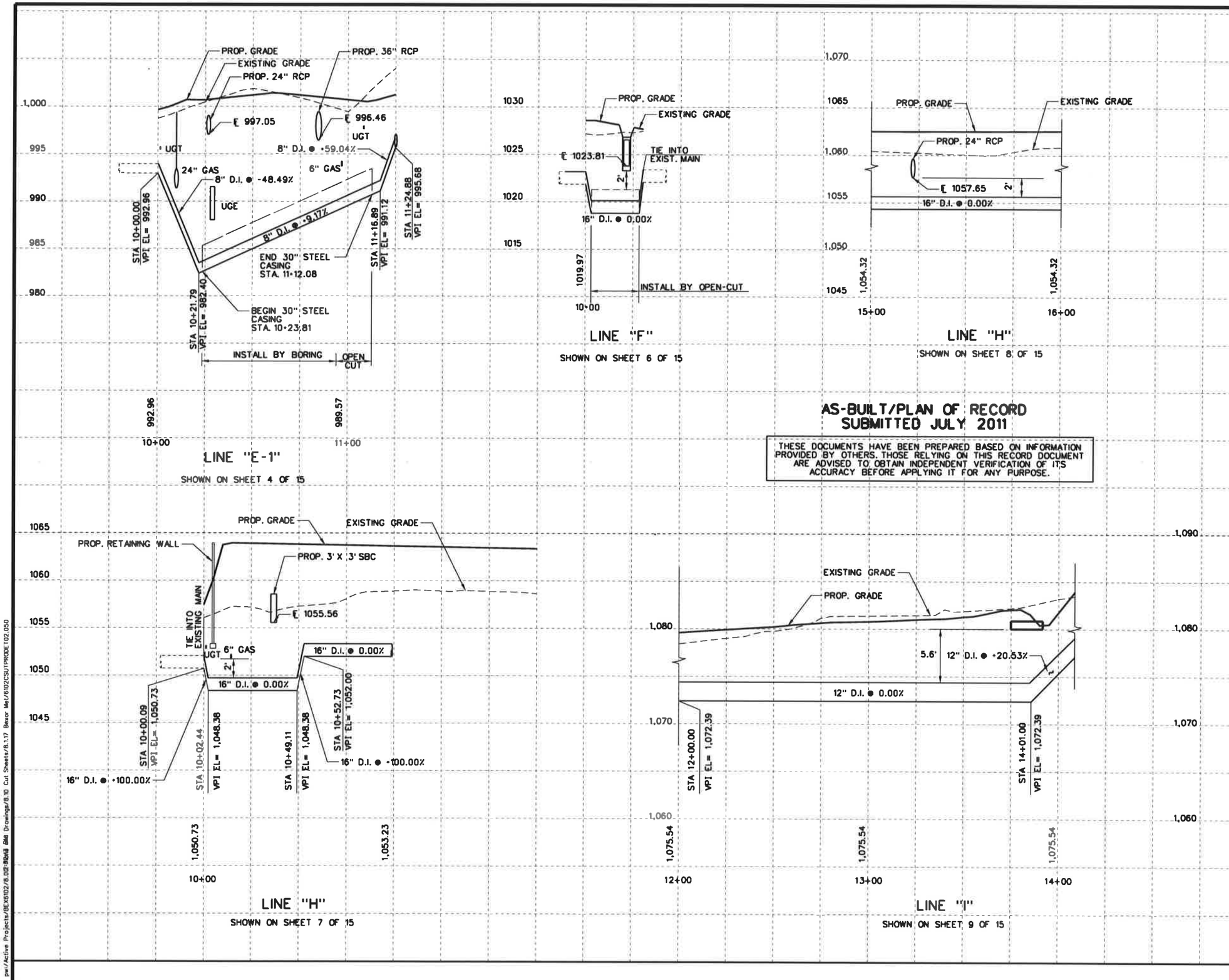

AS-BUILT/PLAN OF RECORD
SUBMITTED JULY 2011

THESE DOCUMENTS HAVE BEEN PREPARED BASED ON INFORMATION PROVIDED BY OTHERS. THOSE RELYING ON THIS RECORD DOCUMENT ARE ADVISED TO OBTAIN INDEPENDENT VERIFICATION OF ITS ACCURACY BEFORE APPLYING IT FOR ANY PURPOSE.

25 12.5 0 25 50
SCALE FEET
HORIZ. SCALE

5 2.5 0 5 10
SCALE FEET
VERT. SCALE

NO.	REVISION	BY	DATE

BexarMet WATER DISTRICT

CP&Y Chiang, Patel & Yerby, Inc.

BEXAR COUNTY
PUBLIC WORKS DIVISION

F.M. 2696 (BLANCO ROAD)

WATER LINE PROFILES

SHEET 2 OF 3

Designed: RG	STATE	BEXAR COUNTY FILE NUMBER	PLAN SET NO.
Checked: HC	TEXAS		UTTP07
Drawn: RG	COUNTY		OF
Checked: HC	BEXAR	2708-01-022, ETC.	SHEETTOTAL

pw:/Active Projects/BEX6102/6.02-8.0 BMI Drawings/8.10 Cut Sheets/8.1.17 Bexar Met/6102CSUTPRODET02.050

AS-BUILT/PLAN OF RECORD
SUBMITTED JULY 2011

THESE DOCUMENTS HAVE BEEN PREPARED BASED ON INFORMATION PROVIDED BY OTHERS. THOSE RELYING ON THIS RECORD DOCUMENT ARE ADVISED TO OBTAIN INDEPENDENT VERIFICATION OF ITS ACCURACY BEFORE APPLYING IT FOR ANY PURPOSE.

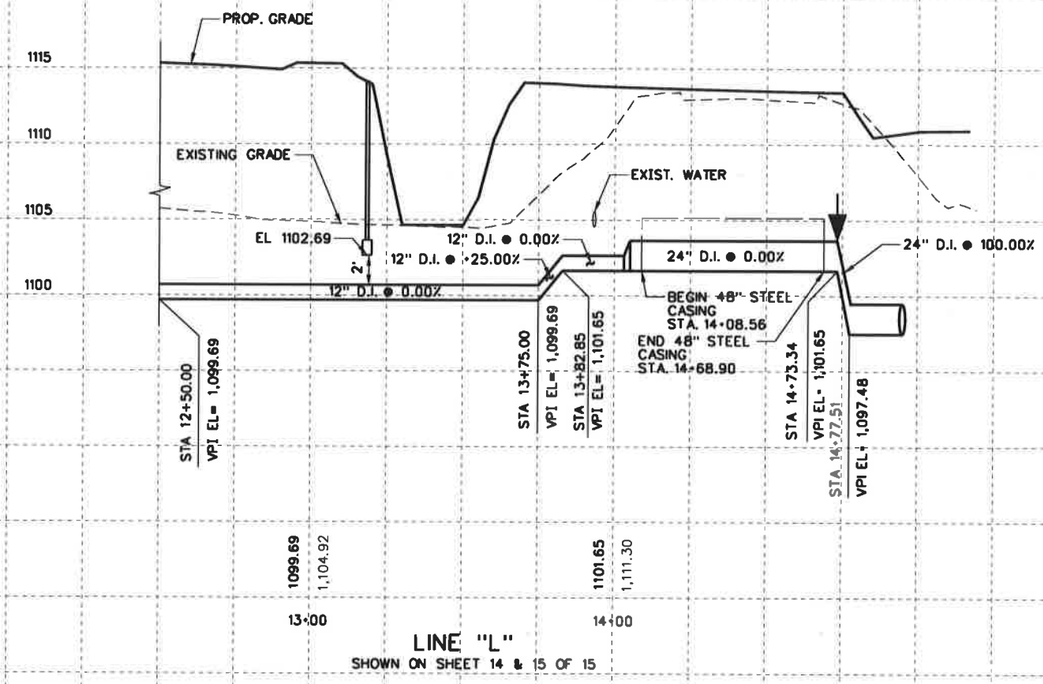

LINE "L"
SHOWN ON SHEET 14 & 15 OF 15

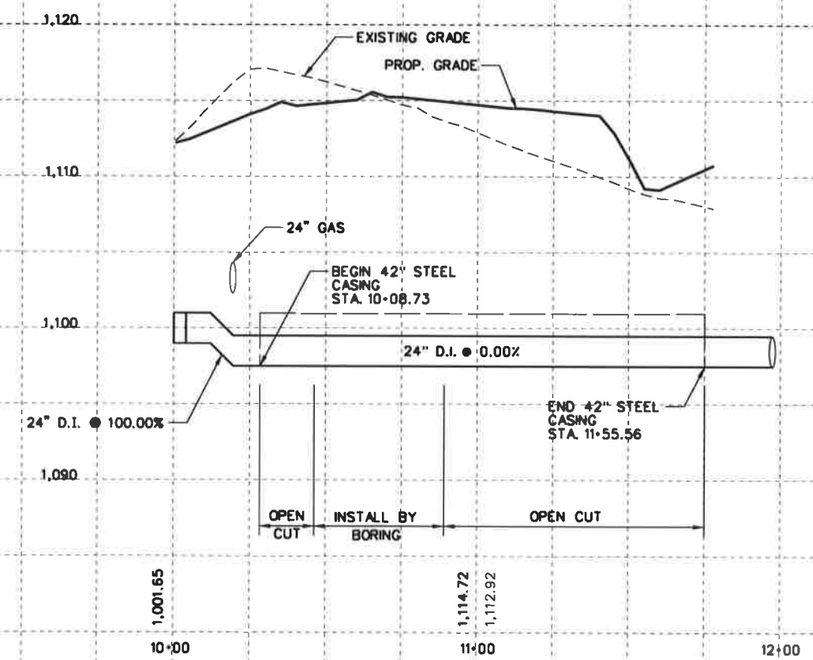

LINE "L-2"
SHOWN ON SHEET 15 OF 15

25 12.5 0 25 50
SCALE FEET
HORIZ. SCALE

5 2.5 0 5 10
SCALE FEET
VERT. SCALE

NO.	REVISION	BY	DATE

BexarMet WATER DISTRICT

CP&Y Chiang, Patel & Yerby, Inc.

BEXAR COUNTY PUBLIC WORKS DIVISION

F.M. 2696 (BLANCO ROAD)

WATER LINE PROFILES

SHEET 3 OF 3

Designed: RG	STATE	BEXAR COUNTY FILE NUMBER	PLAN SET NO.
Checked: HC	TEXAS		UTTP08
Drawn: RG	COUNTY		OF
Checked: HC	BEXAR	2708-01-022, ETC.	SHEETTOTAL

pw:/Active Projects/BEX6102/8.02-8.02 dRM Drawings/8.10 Cut Sheets/8.1.17 Bexar Met/6102CSUTPRODET03.050

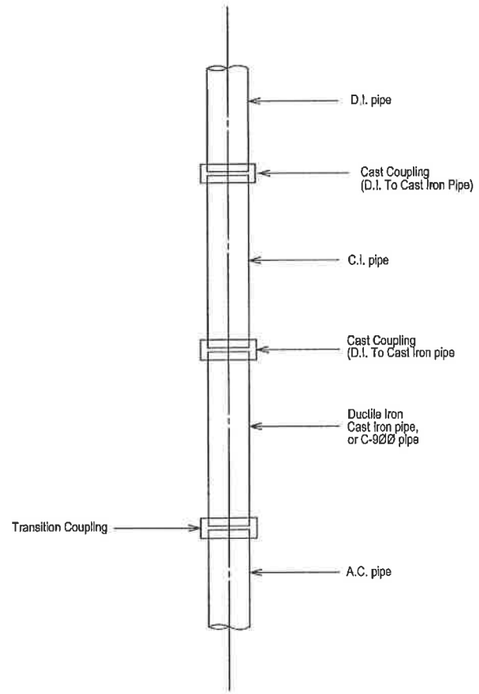

BexarMet WATER DISTRICT	BEXAR METROPOLITAN WATER DISTRICT	ISSUE DATE: OCTOBER 1999	NOT TO SCALE
		DATE / REVISIONS	BY
	PIPE COUPLINGS	DD-812-ØØ	SHEET 1 OF 1

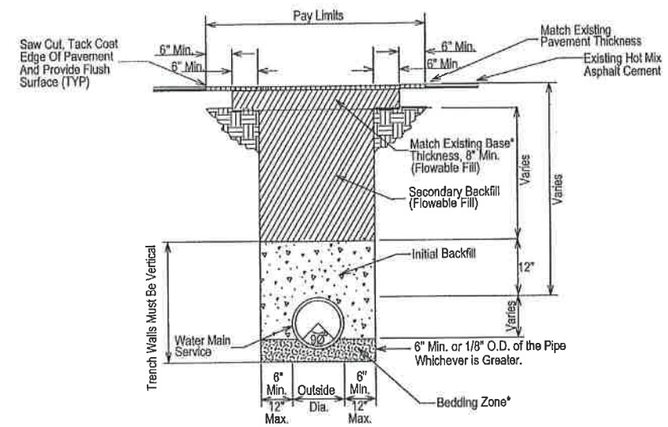

INSIDE PAVEMENT

* ALL WORK SHALL MEET THE REQUIREMENTS OF THE PERMIT (IF REQUIRED) ISSUED BY THE CITY, COUNTY OR STATE.

BexarMet WATER DISTRICT	BEXAR METROPOLITAN WATER DISTRICT	ISSUE DATE: MAY 2001	NOT TO SCALE
		DATE / REVISIONS	BY
	WATER MAIN LAID IN PAVEMENT		SHEET 2 OF 2

Hugo Cabrera P.E. 2-11-08

STATE OF TEXAS
HUGO CABRERA
98245
LICENSED
PROFESSIONAL ENGINEER

NO.	REVISION	BY	DATE

BexarMet WATER DISTRICT

CP&Y Chiang, Patel & Yerby, Inc.

BEXAR COUNTY
PUBLIC WORKS DIVISION

F.M. 2696 (BLANCO ROAD)

WATER DETAIL I

SHEET 1 OF 13

Designed:	STATE	BEXAR COUNTY FILE NUMBER	PLAN SET NO.
Checked:	TEXAS		540
Drawn:	COUNTY		OF
Checked:	BEXAR		842

pw:/Active Projects/BEX6102/8.00 Plans and Drawings/8.10 Cut Sheets/8.1.17 Bexar Met/6102CSUTDET01.999
2/11/2008 2:25:12 PM

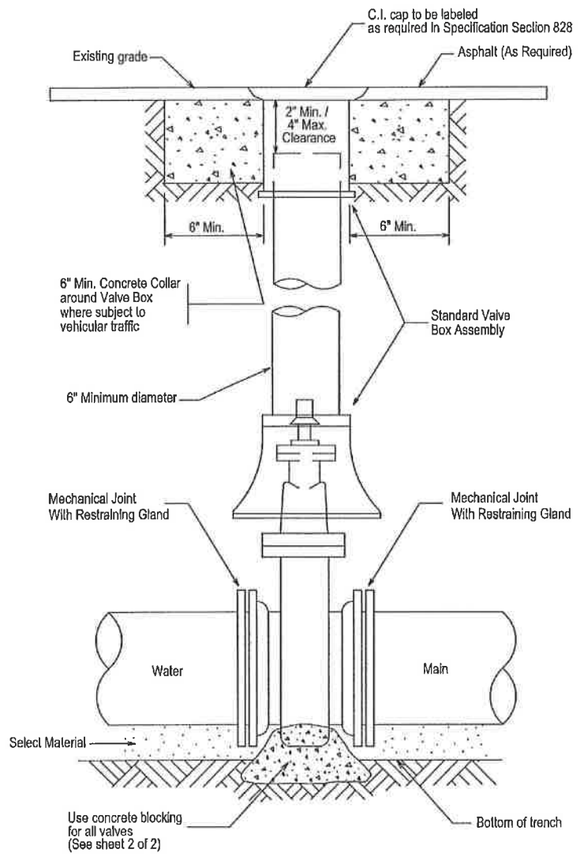

BexarMet WATER DISTRICT

BEXAR METROPOLITAN WATER DISTRICT

INSTALLATION OF NON-GEARED GATE VALVE WITH VALVE BOX AND EXTENSION

ISSUE DATE: OCTOBER 1999	NOT TO SCALE	
DATE	REVISIONS	BY
DD-828-Ø1		SHEET 1 OF 2

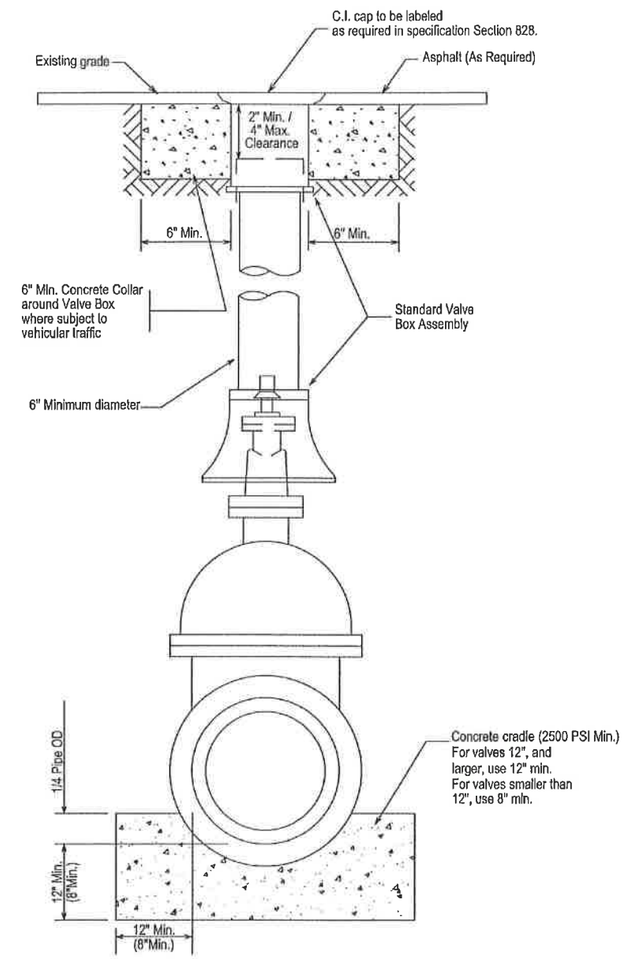

BexarMet WATER DISTRICT

BEXAR METROPOLITAN WATER DISTRICT

INSTALLATION OF NON-GEARED GATE VALVE WITH VALVE BOX AND EXTENSION

ISSUE DATE: OCTOBER 1999	NOT TO SCALE	
DATE	REVISIONS	BY
DD-828-Ø1		SHEET 2 OF 2

Hugo Cabrera P.E. 2-11-08

STATE OF TEXAS
HUGO CABRERA
98245
LICENSED
PROFESSIONAL ENGINEER

NO.	REVISION	BY	DATE

BexarMet WATER DISTRICT

CP&Y Chiang, Patel & Yerby, Inc.

BEXAR COUNTY
PUBLIC WORKS DIVISION

F.M. 2696 (BLANCO ROAD)

WATER DETAIL II

SHEET 2 OF 13

Designed:	STATE	BEXAR COUNTY FILE NUMBER	PLAN SET NO.
Checked:	TEXAS		541
Drawn:	COUNTY		OF
Checked:	BEXAR		842

pw:/Active Projects/BEX6102/8.00 Plans and Drawings/8.10 Cut Sheets/8.1.17 Bexar Met/6102CSU1DET02.999
2/11/2008 2:10:33 PM

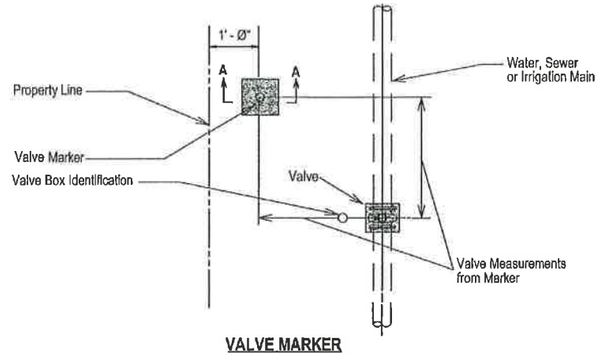

VALVE MARKER

Notes:
1. Valve Marker Is 3" Steel pipe painted as shown
2. Valve Measurements shall be referenced to Marker

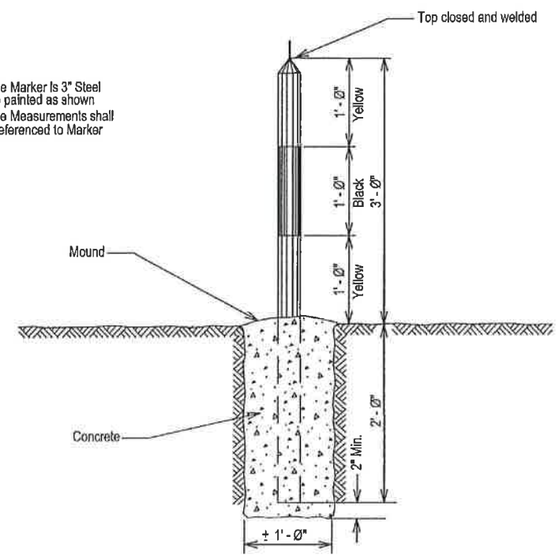

SECTION A-A

BexarMet WATER DISTRICT	BEXAR METROPOLITAN WATER DISTRICT	ISSUE DATE: OCTOBER 1999	NOT TO SCALE
		DATE / REVISIONS	BY
	VALVE MARKER	DD-828-Ø4	SHEET 1 OF 3

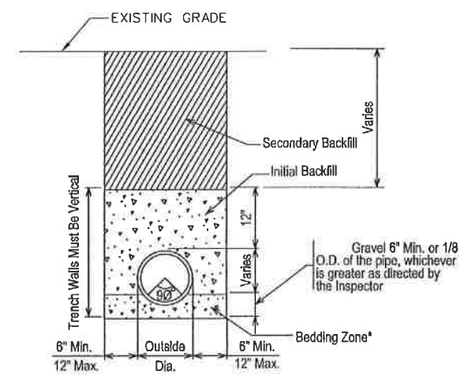

BexarMet WATER DISTRICT	BEXAR METROPOLITAN WATER DISTRICT	ISSUE DATE: OCTOBER 1999	NOT TO SCALE
		DATE / REVISIONS	BY
	WATER MAIN LAID OUT OF PAVEMENT		SHEET 1 OF 3

Hugo Cabrera P.E. 2-11-08

STATE OF TEXAS
HUGO CABRERA
98245
LICENSED
PROFESSIONAL ENGINEER

NO.	REVISION	BY	DATE

BexarMet WATER DISTRICT

CP&Y Chiang, Patel & Yerby, Inc.

BEXAR COUNTY
PUBLIC WORKS DIVISION

F.M. 2696 (BLANCO ROAD)

WATER DETAIL III

SHEET 3 OF 13

Designed:	STATE	BEXAR COUNTY FILE NUMBER	PLAN SET NO.
Checked:	TEXAS		542
Drawn:	COUNTY		OF
Checked:	BEXAR		842

pw:/Active Projects/BEX6102/8.00 Plans and Drawings/8.10 Cut Sheets/8.1.17 Bexar Met/6102CSUTDETD3.999
2/11/2008 2:25:47 PM

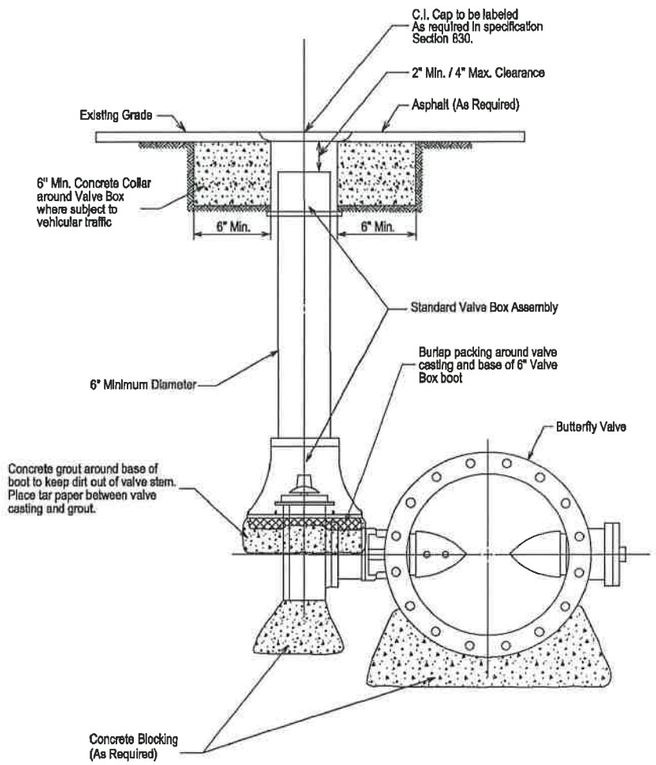

INSTALLATION OF BURIED BUTTERFLY VALVE WITH VALVE BOX COMPLETE

BexarMet WATER DISTRICT	BEXAR METROPOLITAN WATER DISTRICT	ISSUE DATE: OCTOBER 1999	NOT TO SCALE
	INSTALLATION OF BURIED BUTTERFLY VALVE WITH VALVE BOX COMPLETE	DATE / REVISIONS / BY	
		DD-83Ø-Ø1	SHEET 1 OF 4

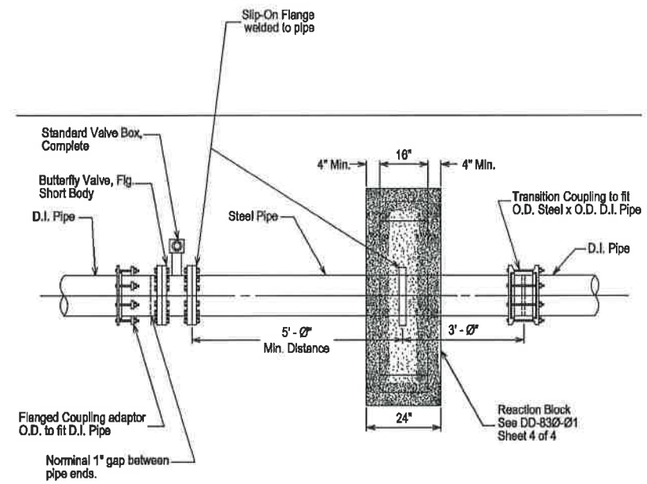

TYPICAL BUTTERFLY VALVE ARRANGEMENT FOR 2Ø" AND LARGER D.I. MAIN

BexarMet WATER DISTRICT	BEXAR METROPOLITAN WATER DISTRICT	ISSUE DATE: OCTOBER 1999	NOT TO SCALE
	TYPICAL BUTTERFLY VALVE ARRANGEMENT FOR 2Ø" AND LARGER D.I. MAIN	DATE / REVISIONS / BY	
		DD-83Ø-Ø1	SHEET 2 OF 4

Hugo Cabrera P.E. 7-1-08

STATE OF TEXAS
HUGO CABRERA
98245
LICENSED
PROFESSIONAL ENGINEER

NO.	REVISION	BY	DATE

BexarMet WATER DISTRICT

CP&Y Chiang, Patel & Yerby, Inc.

BEXAR COUNTY
PUBLIC WORKS DIVISION

F.M. 2696 (BLANCO ROAD)

WATER DETAIL IV

SHEET 4 OF 13

Designed:	STATE	BEXAR COUNTY FILE NUMBER	PLAN SET NO.
Checked:	TEXAS		543
Drawn:	COUNTY		OF
Checked:	BEXAR		842

pw:/Active Projects/BEX6102/8.00 Plans and Drawings/8.10 Cut Sheets/8.1.17 Bexar Met/6102CSUTDET04.999
2/11/2008 2:11:14 PM

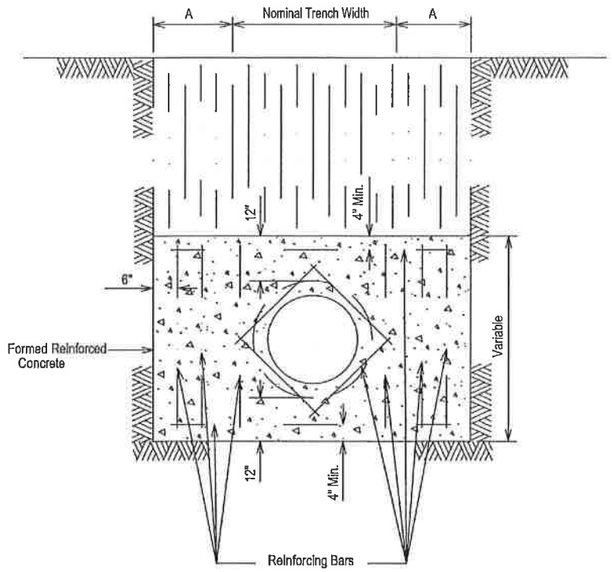

END VIEW OF REACTION BLOCK

Main Size	A (Min.)	Reinforcing Bar Size	Bearing Surface Required (in Sq. Ft.)
6"	12"	#4	3
8"	12"	#4	5
12"	18"	#4	8
16"	18"	#4	12
20"	28"	#5	16
24"	28"	#5	23
30"	36"	#5	35
36"	36"	#5	50
42"	36"	#5	70

BexarMet WATER DISTRICT

BEXAR METROPOLITAN WATER DISTRICT

CONCRETE REACTION BLOCK FOR BUTTERFLY VALVES & BLOW-OFF ASSEMBLIES ON D.I. & C.S.C. MAINS

ISSUE DATE: OCTOBER 1999 | NOT TO SCALE

DATE	REVISIONS	BY

DD-830-01

SHEET 4 OF 4

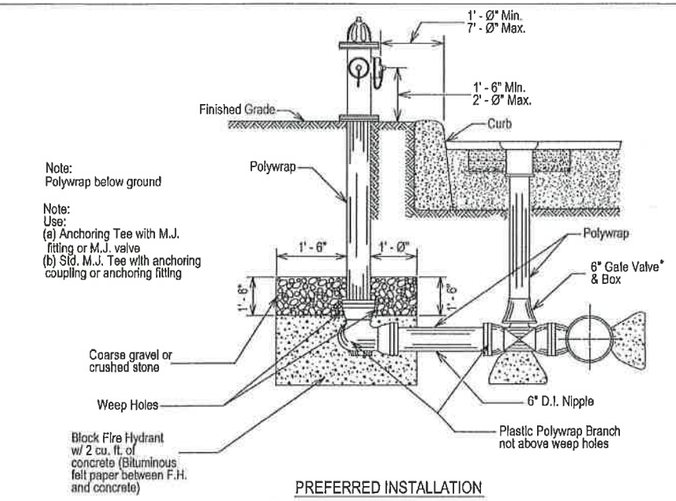

PREFERRED INSTALLATION
Profile shown, without Horizontal Bend

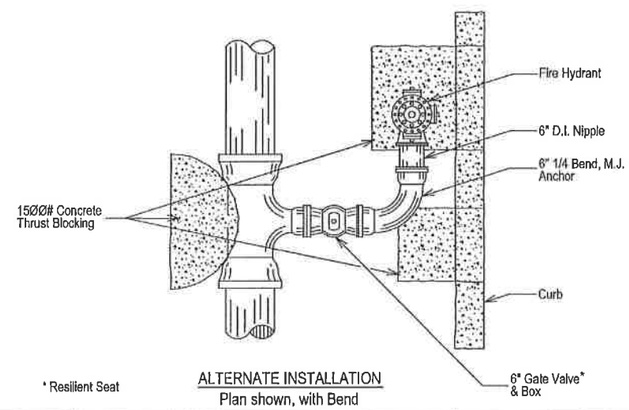

* Resilient Seat

ALTERNATE INSTALLATION
Plan shown, with Bend

BexarMet WATER DISTRICT

BEXAR METROPOLITAN WATER DISTRICT

FIRE HYDRANT INSTALLATION

ISSUE DATE: OCTOBER 1999 | NOT TO SCALE

DATE	REVISIONS	BY

DD-834-01

SHEET 1 OF 1

Hugo Cabrera P.E. 2/11/08

STATE OF TEXAS
HUGO CABRERA
98245
LICENSED
PROFESSIONAL ENGINEER

NO.	REVISION	BY	DATE

BexarMet WATER DISTRICT

CP&Y Chiang, Patel & Yerby, Inc.

BEXAR COUNTY PUBLIC WORKS DIVISION

F.M. 2696 (BLANCO ROAD)

WATER DETAIL V

SHEET 5 OF 13

Designed:	STATE	BEXAR COUNTY FILE NUMBER	PLAN SET NO.
Checked:	TEXAS		544
Drawn:	COUNTY		OF
Checked:	BEXAR		842

pw:/Active Projects/BEX6102/8.00 Plans and Drawings/8.10 Cut Sheets/8.1.17 Bexar Met/6102CSUTDET05.999
2/11/2008 2:11:27 PM

Notes:
1. Embed all exterior metal surfaces in silica sand
2. All reinforcing bars in the concrete reaction block shall be #5

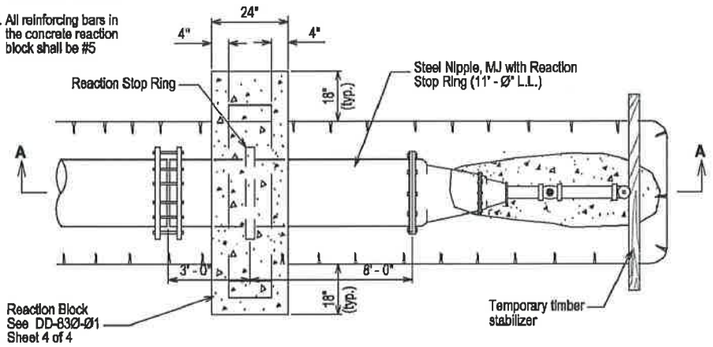

PLAN

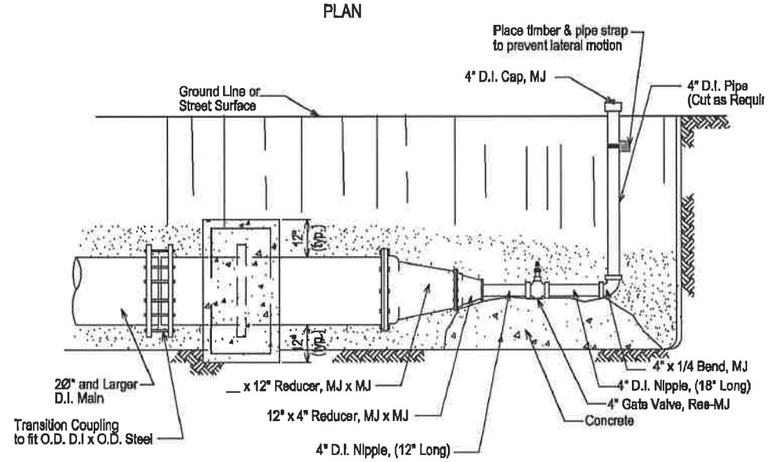

BexarMet	BEXAR METROPOLITAN WATER DISTRICT	ISSUE DATE: OCTOBER 1999	NOT TO SCALE
	4" TEMPORARY BLOW-OFF ASSEMBLY 2Ø" AND LARGER D.I. MAIN	DATE / REVISIONS	BY
		DD-844-Ø4	SHEET

End Cap — BMWD Decal

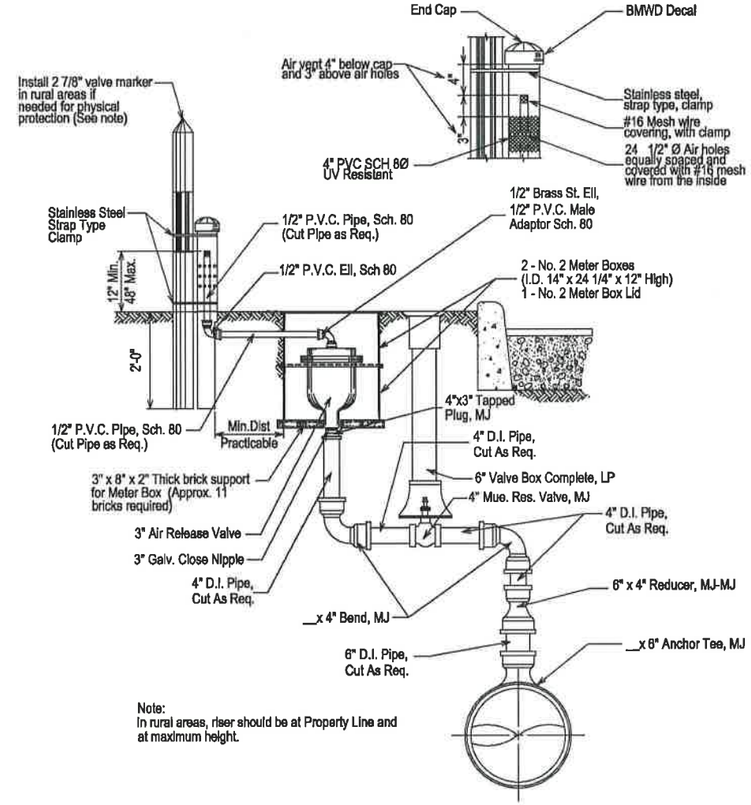

Note:
In rural areas, riser should be at Property Line and at maximum height.

BexarMet	BEXAR METROPOLITAN WATER DISTRICT	ISSUE DATE: JUNE 2002	NOT TO SCALE
	INSTALLATION OF 3" AIR RELEASE VALVE	DATE / REVISIONS	BY
		DD-846-Ø3	SHEET 1 OF 1

Hugo Cabrera P.E. 2-11-08

STATE OF TEXAS
HUGO CABRERA
98245
LICENSED
PROFESSIONAL ENGINEER

NO.	REVISION	BY	DATE

BexarMet WATER DISTRICT

CP&Y Chiang, Patel & Yerby, Inc.

BEXAR COUNTY PUBLIC WORKS DIVISION

F.M. 2696 (BLANCO ROAD)

WATER DETAIL VI

SHEET 6 OF 13

Designed:	STATE	BEXAR COUNTY FILE NUMBER	PLAN SET NO.
Checked:	TEXAS		545
Drawn:	COUNTY		OF
Checked:	BEXAR		842

pw:/Active Projects/BEX6102/8.00 Plans and Drawings/8.10 Cut Sheets/8.1.17 Bexar Met/6102CSUTDET07.999
2/11/2008 3:54:52 PM

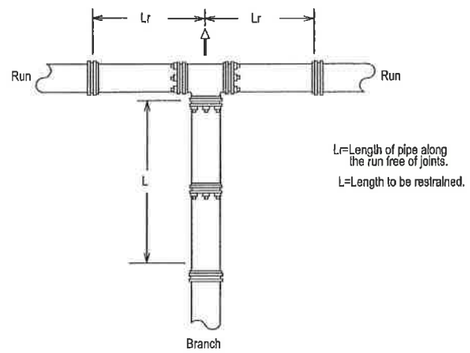

RESTRAINED LENGTH FOR TEES

PIPE SIZE (Inch)	BRANCH SIZE (Inch)	LENGTH OF RUN (ft.)	RESTRAINED LENGTH IN FEET, WHEN TEST PRESSURE = 2ØØ psi	RESTRAINED LENGTH IN FEET, WHEN TEST PRESSURE = 15Ø psi
6	4	Ø	42	31
6	4	5	7	1
6	4	1Ø	1	1
6	6	Ø	59	44
6	6	5	35	2Ø
6	6	1Ø	11	1
8	4	Ø	42	31
8	4	5	1	1
8	6	Ø	59	44
8	6	5	28	13
8	6	1Ø	1	1
8	8	Ø	77	58
8	8	5	53	34
8	8	1Ø	3Ø	11
8	8	15	6	1

RESTRAINED LENGTHS FOR TEES

BexarMet WATER DISTRICT

BEXAR METROPOLITAN WATER DISTRICT

RESTRAINED LENGTHS FOR TEES

ISSUE DATE: OCTOBER 1999 | NOT TO SCALE

DATE	REVISIONS	BY

DD-839-Ø4

SHEET 1 OF 2

RESTRAINED LENGTH FOR TEES (Cont'd)

PIPE SIZE (Inch)	BRANCH SIZE (Inch)	LENGTH OF RUN (ft.)	RESTRAINED LENGTH IN FEET, WHEN TEST PRESSURE = 2ØØ psi	RESTRAINED LENGTH IN FEET, WHEN TEST PRESSURE = 15Ø psi
12	4	Ø	42	31
12	4	5	1	1
12	6	Ø	59	44
12	6	5	13	1
12	6	1Ø	1	1
12	8	Ø	77	58
12	8	5	42	23
12	8	1Ø	7	1
12	8	15	1	1
12	12	Ø	1Ø9	82
12	12	5	86	59
12	12	1Ø	63	35
12	12	15	39	12

RESTRAINED LENGTH DESIGN

Restrained length calculations are for P.V.C pipe bedded in compacted granular material extending to the top of the pipe. The native soil material is assumed to be inorganic clay of high plasticity. Depth of bury is assumed to be 4 feet.

Note:
These calculations are provided for reference. The restrained length shall be designed based upon the conditions encountered during the installation.

BexarMet WATER DISTRICT

BEXAR METROPOLITAN WATER DISTRICT

RESTRAINED LENGTHS FOR TEES

ISSUE DATE: OCTOBER 1999 | NOT TO SCALE

DATE	REVISIONS	BY

DD-839-Ø4

SHEET 2 OF 2

Hugo Cabrera P.E. 2/11/08

STATE OF TEXAS
HUGO CABRERA
98245
LICENSED
PROFESSIONAL ENGINEER

NO.	REVISION	BY	DATE

BexarMet WATER DISTRICT

CP&Y Chiang, Patel & Yerby, Inc.

BEXAR COUNTY PUBLIC WORKS DIVISION

F.M. 2696 (BLANCO ROAD)

WATER DETAIL VII

SHEET 7 OF 13

Designed:	STATE	BEXAR COUNTY FILE NUMBER	PLAN SET NO.
Checked:	TEXAS		546
Drawn:	COUNTY		OF
Checked:	BEXAR		842

pw:/Active Projects/BEX6102/8.00 Plans and Drawings/8.10 Cut Sheets/8.1.17 Bexar Met/6102CSUTDETDB.999
2/11/2008 2:12:07 PM

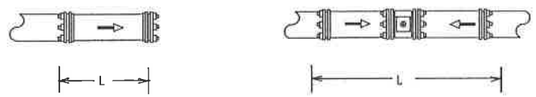

L=LENGTH TO BE RESTRAINED

PIPE SIZE (inch)	RESTRAINED LENGTH IN FEET, WHEN TEST PRESSURE = 200 psi	RESTRAINED LENGTH IN FEET, WHEN TEST PRESSURE = 150 psi
6	59	44
8	77	58
10	93	69
12	109	82

RESTRAINED LENGTH DESIGN

Restrained length calculations are for P.V.C pipe bedded in compacted granular material extending to the top of the pipe. The native soil material is assumed to be inorganic clay of high plasticity. Depth of bury is assumed to be 4 feet.

Note:
These calculations are provided for reference. The restrained length shall be designed based upon the conditions encountered during the installation.

BexarMet WATER DISTRICT	BEXAR METROPOLITAN WATER DISTRICT	ISSUE DATE: OCTOBER 1999	NOT TO SCALE
		DATE / REVISIONS	BY
	RESTRAINED LENGTHS FOR DEAD ENDS / INLINE VALVE	DD-839-05	SHEET 1 OF 1

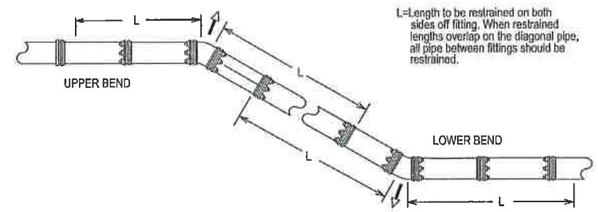

L=Length to be restrained on both sides off fitting. When restrained lengths overlap on the diagonal pipe, all pipe between fittings should be restrained.

PIPE SIZE (inch)	BEND ANGLE (deg.)	LOW SIDE DEPTH	UPPER BEND RESTRAINED LENGTH IN FEET TEST PRESSURE = 200 psi	LOWER BEND RESTRAINED LENGTH IN FEET TEST PRESSURE = 200 psi	UPPER BEND RESTRAINED LENGTH IN FEET TEST PRESSURE = 150 psi	LOWER BEND RESTRAINED LENGTH IN FEET TEST PRESSURE = 150 psi
6	45	5	24	8	18	6
6	22.5	5	12	4	9	3
6	11.25	5	6	2	4	1
6	45	10	24	5	18	4
6	22.5	10	12	2	9	2
6	11.25	10	6	1	4	1
8	45	5	32	11	24	8
8	22.5	5	15	5	11	4
8	11.25	5	8	3	6	2
8	45	10	32	7	24	5
8	22.5	10	15	3	11	2
8	11.25	10	8	2	6	1
12	45	5	45	16	34	12
12	22.5	5	22	7	16	6
12	11.25	5	11	4	8	3
12	45	10	45	10	34	7
12	22.5	10	22	5	16	3
12	11.25	10	11	2	8	2

RESTRAINED LENGTH DESIGN

Restrained length calculations are for P.V.C pipe bedded in compacted granular material extending to the top of the pipe. The native soil material is assumed to be inorganic clay of high plasticity. Depth of bury is assumed to be 4 feet.

Note:
These calculations are provided for reference. The restrained length shall be designed based upon the conditions encountered during the installation.

BexarMet WATER DISTRICT	BEXAR METROPOLITAN WATER DISTRICT	ISSUE DATE: OCTOBER 1999	NOT TO SCALE
		DATE / REVISIONS	BY
	RESTRAINED LENGTHS FOR VERTICAL OFFSETS	DD-839-06	SHEET 1 OF 1

Hugo Cabrera P.E. 2-11-08

STATE OF TEXAS
HUGO CABRERA
98245
LICENSED
PROFESSIONAL ENGINEER

NO.	REVISION	BY	DATE

BexarMet WATER DISTRICT

CP&Y Chiang, Patel & Yerby, Inc.

BEXAR COUNTY
PUBLIC WORKS DIVISION

F.M. 2696 (BLANCO ROAD)

WATER DETAIL VIII

SHEET 8 OF 13

Designed:	STATE	BEXAR COUNTY FILE NUMBER	PLAN SET NO.
Checked:	TEXAS		547
Drawn:	COUNTY		OF
Checked:	BEXAR		842

pw:/Active Projects/BEX6102/8.00 Plans and Drawings/8.10 Cut Sheets/8.1.17 Bexar Met/6102CSUTDET09.dwg
2/11/2008 2:12:19 PM

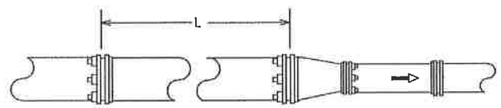

L=Length to be restrained

PIPE SIZE (Inch)	SMALL SIZE (Inch)	RESTRAINED LENGTH IN FEET, WHEN TEST PRESSURE = 200 psi	RESTRAINED LENGTH IN FEET, WHEN TEST PRESSURE = 150 psi
6	4	30	23
8	4	55	42
8	6	32	24
12	4	95	71
12	6	80	60
12	8	58	43

RESTRAINED LENGTH DESIGN

Restrained length calculations are for P.V.C pipe bedded in compacted granular material extending to the top of the pipe. The native soil material is assumed to be inorganic clay of high plasticity. Depth of bury is assumed to be 4 feet.

Note:
These calculations are provided for reference. The restrained length shall be designed based upon the conditions encountered during the installation.

BexarMet WATER DISTRICT

BEXAR METROPOLITAN WATER DISTRICT

RESTRAINED LENGTHS FOR REDUCERS

ISSUE DATE: OCTOBER 1999 | NOT TO SCALE

DATE	REVISIONS	BY

DD-839-07

SHEET 1 OF 1

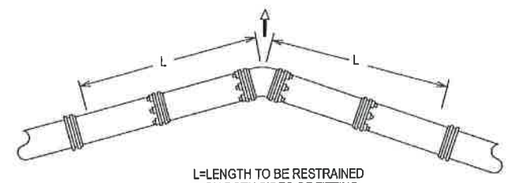

L=LENGTH TO BE RESTRAINED ON BOTH SIDES OF FITTING

PIPE SIZE (Inch)	BEND ANGLE (deg)	RESTRAINED LENGTH IN FEET, WHEN TEST PRESSURE = 200 psi	RESTRAINED LENGTH IN FEET, WHEN TEST PRESSURE = 150 psi
6	90	23	17
6	45	9	7
6	22.5	5	3
6	11.25	2	2
8	90	30	22
8	45	12	9
8	22.5	6	4
8	11.25	3	2
12	90	43	32
12	45	18	13
12	22.5	8	6
12	11.25	4	3

RESTRAINED LENGTH DESIGN

Restrained length calculations are for P.V.C pipe bedded in compacted granular material extending to the top of the pipe. The native soil material is assumed to be inorganic clay of high plasticity. Depth of bury is assumed to be 4 feet.

Note:
These calculations are provided for reference. The restrained length shall be designed based upon the conditions encountered during the installation.

BexarMet WATER DISTRICT

BEXAR METROPOLITAN WATER DISTRICT

RESTRAINED LENGTHS FOR HORIZONTAL BENDS

ISSUE DATE: OCTOBER 1999 | NOT TO SCALE

DATE	REVISIONS	BY

DD-839-08

SHEET 1 OF 1

Hugo Cabrera P.E. 2-11-08

STATE OF TEXAS
HUGO CABRERA
98245
LICENSED
PROFESSIONAL ENGINEER

NO.	REVISION	BY	DATE

BexarMet WATER DISTRICT

CP&Y Chiang, Patel & Yerby, Inc.

BEXAR COUNTY PUBLIC WORKS DIVISION

F.M. 2696 (BLANCO ROAD)

WATER DETAIL IX

SHEET 9 OF 13

Designed:	STATE	BEXAR COUNTY FILE NUMBER	PLAN SET NO.
Checked:	TEXAS		548
Drawn:	COUNTY		OF
Checked:	BEXAR		842

per/Active Projects/BEX6102/8.00 Plans and Drawings/8.10 Cut Sheets/8.1.17 Bexar Met/6102CSUTDET010.999
2/11/2008 2:09:19 PM

Notes:
1. Embed all exterior metal surfaces in silica sand

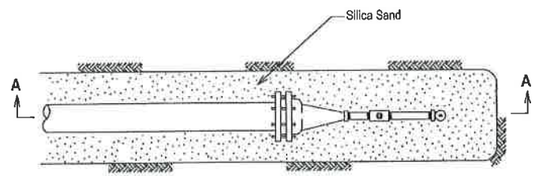

PLAN

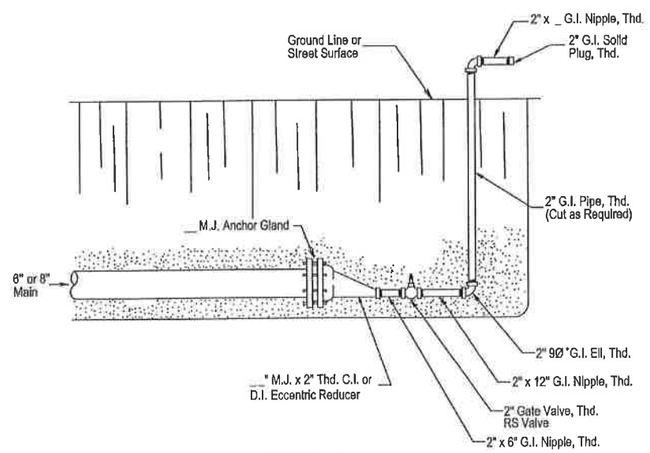

SECTION A-A

BexarMet WATER DISTRICT	BEXAR METROPOLITAN WATER DISTRICT	ISSUE DATE: OCTOBER 1999	NOT TO SCALE
	2" TEMPORARY BLOW-OFF ASSEMBLY FOR CHLORINATION ON 6" & 8" D.I. MAINS	DATE / REVISIONS / BY	
		DD-844-Ø1	SHEET 2 OF 6

Notes:
1. Embed all exterior metal surfaces in silica sand

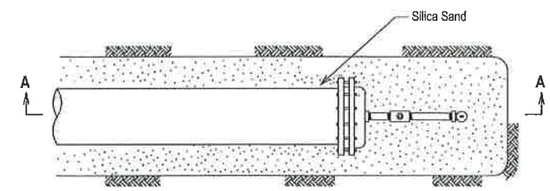

PLAN

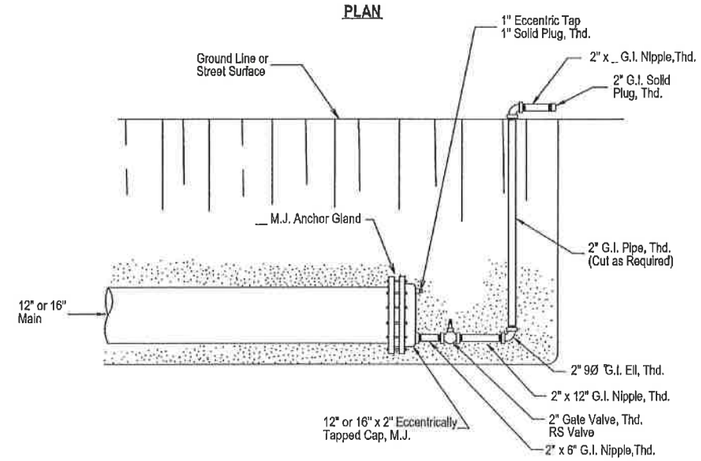

SECTION A-A

BexarMet WATER DISTRICT	BEXAR METROPOLITAN WATER DISTRICT	ISSUE DATE: OCTOBER 1999	NOT TO SCALE
	2" TEMPORARY BLOW-OFF ASSEMBLY ON 12" & 16" D.I. MAINS	DATE / REVISIONS / BY	
		DD-844-Ø1	SHEET 5 OF 6

Hugo Cabrera P.E. 2-11-08

STATE OF TEXAS
HUGO CABRERA
98245
LICENSED
PROFESSIONAL ENGINEER

NO.	REVISION	BY	DATE

BexarMet WATER DISTRICT

CP&Y Chiang, Patel & Yerby, Inc.

BEXAR COUNTY PUBLIC WORKS DIVISION

F.M. 2696 (BLANCO ROAD)

WATER DETAIL X

SHEET 10 OF 13

Designed:	STATE	BEXAR COUNTY FILE NUMBER	PLAN SET NO.
Checked:	TEXAS		549
Drawn:	COUNTY		OF
Checked:	BEXAR		842

pw:/Active Projects/BEX6102/8.00 Plans and Drawings/8.10 Cut Sheets/8.1.17 Bexar Met/6102CSUTDETD11999
2/11/2008 2:09:37 PM

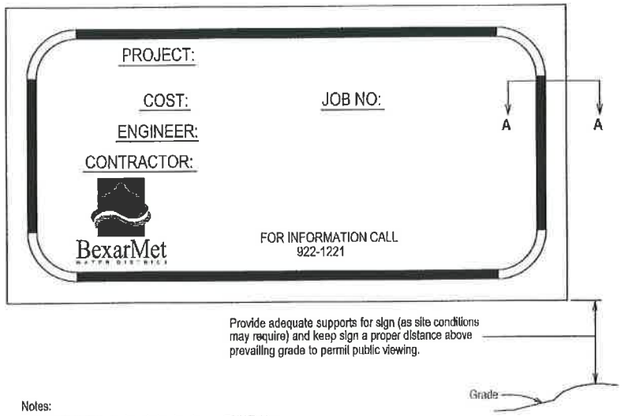

Notes:
- Logo (with lettering) and sign border are BMWD blue
- All other lettering is black (sized to fit space)
- 4' x 8' sheet of 3/4" plywood, Grade A-C
- Signs to be placed in prominent location along a major thoroughfare within the project limits

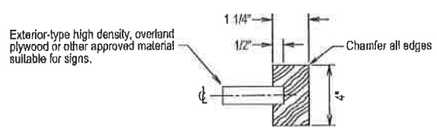

SECTION A-A

BEXAR METROPOLITAN WATER DISTRICT	ISSUE DATE: OCTOBER 1999	NOT TO SCALE
	DATE / REVISIONS	BY
PROJECT SIGN FOR BMWD CONSTRUCTION	DD-845-Ø2	SHEET 1 OF 1

Notes:
1. Embed all exterior metal surfaces in silica sand
2. All reinforcing bars in the concrete reaction block shall be #5

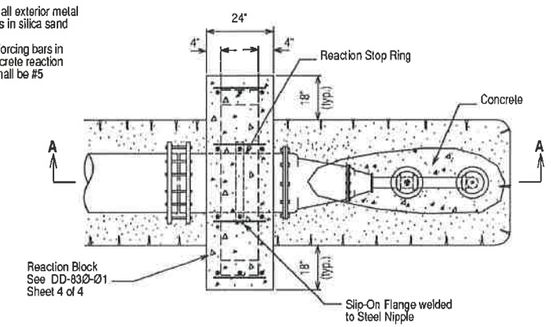

PLAN

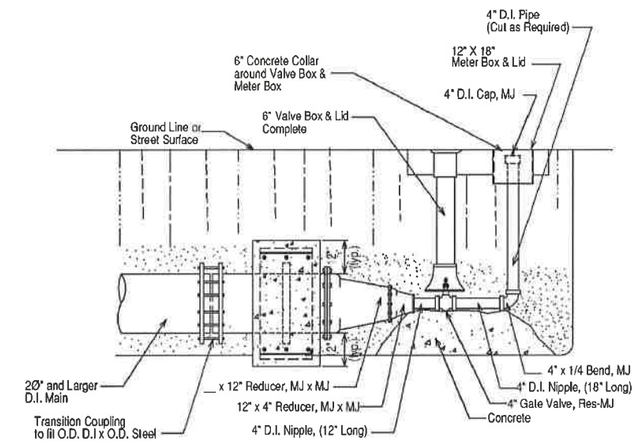

SECTION A-A

BEXAR METROPOLITAN WATER DISTRICT	ISSUE DATE: OCTOBER 1999	NOT TO SCALE
	DATE / REVISIONS	BY
4" PERMANENT BLOW-OFF ASSEMBLY 20" AND LARGER D.I. MAIN	6/6/02	N.M.
	DD-844-Ø5	SHEET

Hugo Cabrera PE 2/11-08

STATE OF TEXAS
HUGO CABRERA
98245
LICENSED
PROFESSIONAL ENGINEER

NO.	REVISION	BY	DATE

BexarMet WATER DISTRICT

CP&Y Chiang, Patel & Yerby, Inc.

BEXAR COUNTY
PUBLIC WORKS DIVISION

F.M. 2696 (BLANCO ROAD)

WATER DETAIL XI

SHEET 11 OF 13

Designed:	STATE	BEXAR COUNTY FILE NUMBER	PLAN SET NO.
Checked:	TEXAS		550
Drawn:	COUNTY		OF
Checked:	BEXAR		842

pw:/Active Projects/BEX6102/8.00 Plans and Drawings/8.10 Cut Sheets/8.1.17 Bexar Met/6102CSUTDET012.pwg
2/11/2008 4:01:10 PM

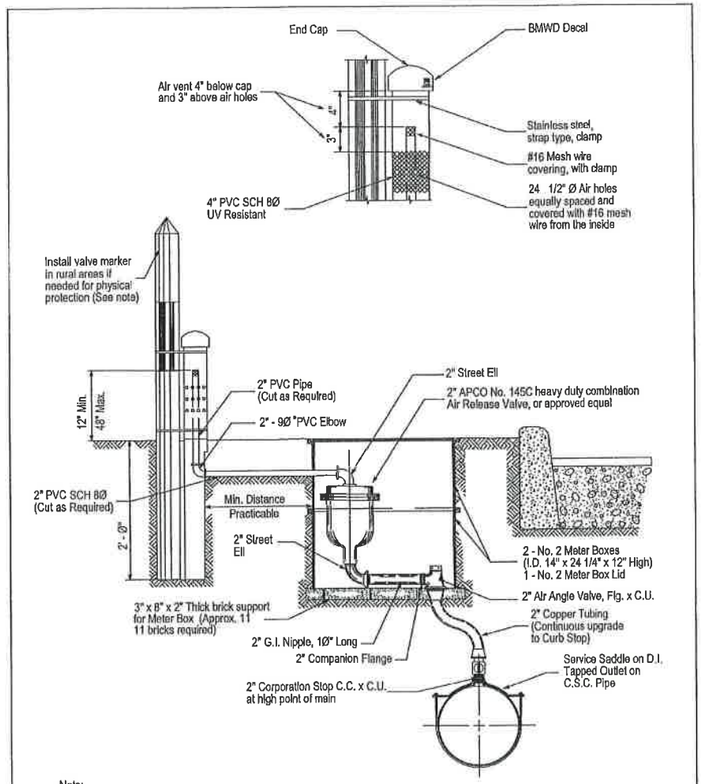

Note:
In rural areas, riser should be at Property Line and at maximum height.

BexarMet	BEXAR METROPOLITAN WATER DISTRICT	ISSUE DATE: OCTOBER 1999	NOT TO SCALE
		DATE / REVISIONS	BY
	INSTALLATION OF 2" AIR RELEASE VALVE	DD-846-Ø2	SHEET 1 OF 1

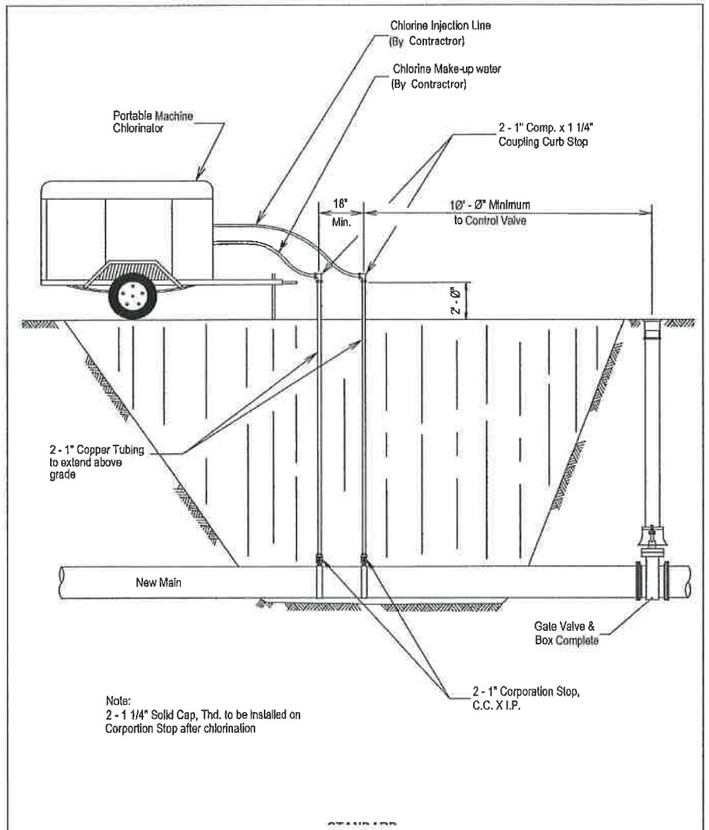

Note:
2 - 1 1/4" Solid Cap, Thd. to be installed on Corportion Stop after chlorination

BexarMet	BEXAR METROPOLITAN WATER DISTRICT	ISSUE DATE: OCTOBER 1999	NOT TO SCALE
		DATE / REVISIONS	BY
	STANDARD CHLORINATION INSTALLATION	DD-847-Ø1	SHEET 1 OF 1

Hugo Cabrera P.E. 2-11-08

STATE OF TEXAS
HUGO CABRERA
98245
LICENSED
PROFESSIONAL ENGINEER

NO.	REVISION	BY	DATE

BexarMet WATER DISTRICT

CP&Y Chiang, Patel & Yerby, Inc.

BEXAR COUNTY PUBLIC WORKS DIVISION

F.M. 2696 (BLANCO ROAD)

WATER DETAIL XII

SHEET 12 OF 13

Designed:	STATE	BEXAR COUNTY FILE NUMBER	PLAN SET NO.
Checked:	TEXAS		551
Drawn:	COUNTY		OF
Checked:	BEXAR		842

pw:/Active Projects/BEX6102/8.00 Plans and Drawings/8.10 Cut Sheets/8.1.17 Bexar Met/6102CSUTDET013.999
2/11/2008 2:10:04 PM

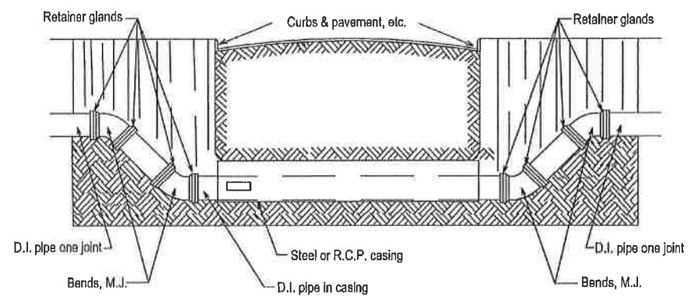

Notes:
Retainer glands for fittings shall be paid for by separate Item
Joint restraints shall be approved as specified in Material Specification Item 95-10

BexarMet	BEXAR METROPOLITAN WATER DISTRICT	ISSUE DATE: OCTOBER 1999	NOT TO SCALE
		DATE / REVISIONS	BY
	INSTALLATION OF PIPE IN BORE	DD-856-Ø2	SHEET 4 OF 4

Hugo Cabrera P.E. 2/11/08

STATE OF TEXAS
HUGO CABRERA
98245
LICENSED
PROFESSIONAL ENGINEER

NO.	REVISION	BY	DATE

BexarMet WATER DISTRICT

CP&Y Chiang, Patel & Yerby, Inc.

BEXAR COUNTY
PUBLIC WORKS DIVISION

F.M. 2696 (BLANCO ROAD)

WATER DETAIL XIII

SHEET 13 OF 13

Designed:	STATE	BEXAR COUNTY FILE NUMBER	PLAN SET NO.
Checked:	TEXAS		552
Drawn:	COUNTY		OF
Checked:	BEXAR		842

pw:/Active Projects/BEX6102/8.00 Plans and Drawings/8.10 Cut Sheets/8.1.17 Bexar Met/6102CSUTDET014.999
2/11/2008 2:10:16 PM

DUCTBANK ALIGNMENT 1

```
**        1   DESCRIBE CHAIN CECDUCT_C008
Chain CECDUCT_C008 contains:
5077 5078 5079 CUR CECDUCT_C008-1 CUR CECDUCT_C008-2 5080
5081 5082 5083 5084 5085 5086 5087 5088 5089 5090
 CUR CECDUCT_C008-3 5091

Beginning chain CECDUCT_C008 description
================================================================================

Point 5077              N  13,774,168.2740 E   2,124,562.1002 Sta      99+91.76

Course from 5077 to 5078 N 13* 08' 00.92" W Dist 10.0000

Point 5078              N  13,774,178.0124 E   2,124,559.8279 Sta     100+01.76

Course from 5078 to 5079 N 31* 51' 52.58" E Dist 15.5205

Point 5079              N  13,774,191.1939 E   2,124,568.0214 Sta     100+17.28

Course from 5079 to PC CECDUCT_C008-1 N 13* 08' 00.92" W Dist 123.0253

                                   Curve Data
                                  *----------*
Curve CECDUCT_C008-1
P.I.  Station          103+88.51  N     13,774,552.7132  E      2,124,483.6698
Delta        =      15* 04' 00.00" (LT)
Degree       =       3* 03' 09.89"
Tangent      =             248.2042
Length       =             493.5446
Radius       =           1,876.8600
External     =              16.3407
Long Chord   =             492.1238
Mid. Ord.    =              16.1996
P.C.  Station          101+40.31  N     13,774,311.0013  E      2,124,540.0673
P.T.  Station          106+33.85  N     13,774,771.4559  E      2,124,366.3797
C.C.                              N     13,773,884.5369  E      2,122,712.3005
Back         = N  13* 08' 00.92" W
Ahead        = N  28* 12' 00.92" W
Chord Bear   = N  20* 40' 00.92" W

Course from PT CECDUCT_C008-1 to PC CECDUCT_C008-2 N 28* 12' 00.92" W Dist 818.9200

                                   Curve Data
                                  *----------*
Curve CECDUCT_C008-2
P.I.  Station          119+17.39  N     13,775,902.6447  E      2,123,759.8352
Delta        =      26* 17' 38.77" (LT)
Degree       =       2* 52' 49.23"
Tangent      =             464.6237
Length       =             912.8810
Radius       =           1,989.2000
External     =              53.5412
Long Chord   =             904.8913
Mid. Ord.    =              52.1379
P.C.  Station          114+52.77  N     13,775,493.1712  E      2,123,979.3953
P.T.  Station          123+65.65  N     13,776,172.4903  E      2,123,381.6044
C.C.                              N     13,774,553.1654  E      2,122,226.3106
Back         = N  28* 12' 00.92" W
Ahead        = N  54* 29' 39.69" W
Chord Bear   = N  41* 20' 50.30" W

Course from PT CECDUCT_C008-2 to 5080 N 58* 39' 01.73" W Dist 50.0509

Point 5080              N  13,776,198.5296 E   2,123,338.8604 Sta     124+15.70

Course from 5080 to 5081 N 57* 58' 48.44" W Dist 384.2619

Point 5081              N  13,776,402.2705 E   2,123,013.0585 Sta     127+99.96

Course from 5081 to 5082 N 57* 35' 00.92" W Dist 89.5948

Point 5082              N  13,776,450.2994 E   2,122,937.4249 Sta     128+89.56

Course from 5082 to 5083 N 52* 32' 14.42" W Dist 50.3615

Point 5083              N  13,776,480.9315 E   2,122,897.4505 Sta     129+39.92

Course from 5083 to 5084 N 57* 35' 00.92" W Dist 49.9999

Point 5084              N  13,776,507.7349 E   2,122,855.2418 Sta     129+89.92

Course from 5084 to 5085 N 52* 07' 27.92" W Dist 50.0606

Point 5085              N  13,776,538.4695 E   2,122,815.7267 Sta     130+39.98

Course from 5085 to 5086 N 57* 35' 00.92" W Dist 50.0000

Point 5086              N  13,776,565.2729 E   2,122,773.5180 Sta     130+89.98

Course from 5086 to 5087 N 60* 41' 27.52" W Dist 50.0000

Point 5087              N  13,776,589.7489 E   2,122,729.9184 Sta     131+39.98

Course from 5087 to 5088 N 57* 35' 00.92" W Dist 264.9794

Point 5088              N  13,776,731.7961 E   2,122,506.2296 Sta     134+04.96

Course from 5088 to 5089 N 70* 52' 52.11" W Dist 49.9988

Point 5089              N  13,776,748.1721 E   2,122,458.9886 Sta     134+54.96

Course from 5089 to 5090 N 44* 17' 09.71" W Dist 49.9988

Point 5090              N  13,776,783.9644 E   2,122,424.0774 Sta     135+04.96

Course from 5090 to PC CECDUCT_C008-3 N 57* 35' 00.92" W Dist 9.5883
```

DUCTBANK ALIGNMENT 1 CONTINUED

```
                                   Curve Data
                                  *----------*
Curve CECDUCT_C008-3
P.I.  Station          139+87.42  N     13,777,042.5953  E      2,122,016.7982
Delta        =      34* 07' 21.44" (RT)
Degree       =       3* 43' 06.95"
Tangent      =             472.8702
Length       =             917.6207
Radius       =           1,540.7900
External     =              70.9296
Long Chord   =             904.1197
Mid. Ord.    =              67.8081
P.C.  Station          135+14.55  N     13,776,789.1044  E      2,122,415.9832
P.T.  Station          144+32.17  N     13,777,476.3741  E      2,121,828.5371
C.C.                              N     13,778,089.7999  E      2,123,241.9524
Back         = N  57* 35' 00.92" W
Ahead        = N  23* 27' 39.48" W
Chord Bear   = N  40* 31' 20.20" W

Course from PT CECDUCT_C008-3 to 5091 N 57* 29' 21.70" W Dist 22.4245

Point 5091              N  13,777,488.4263 E   2,121,809.6268 Sta     144+54.59

================================================================================
Ending chain CECDUCT_C008 description
```

DUCTBANK ALIGNMENT 2

```
**        1   DESCRIBE CHAIN CECDCT2_C008

Chain CECDCT2_C008 contains:
                    5094 5095 5096

Beginning chain CECDCT2_C008 description
================================================================================

Point 5094              N  13,775,676.5800 E   2,123,831.7600 Sta     100+00.00

Course from 5094 to 5095 N 55* 10' 16.98" E Dist 62.7288

Point 5095              N  13,775,712.4059 E   2,123,883.2518 Sta     100+62.73

Course from 5095 to 5096 N 55* 10' 16.98" E Dist 57.2727

Point 5096              N  13,775,745.1157 E   2,123,930.2649 Sta     101+20.00

================================================================================
Ending chain CECDCT2_C008 description
```

DUCTBANK ALIGNMENT 3

```
**        1   DESCRIBE CHAIN CECDCT3_C008

Chain CECDCT3_C008 contains:
                    5092 CUR CECDCT3_C008-1 CUR CECDCT3_C008-2 CUR CECDCT3_C008-3 5093

Beginning chain CECDCT3_C008 description
================================================================================

Point 5092              N  13,776,736.9323 E   2,122,435.3067 Sta     100+00.00

Course from 5092 to PC CECDCT3_C008-1 N 84* 53' 03.01" E Dist 10.7774

                                   Curve Data
                                  *----------*
Curve CECDCT3_C008-1
P.I.  Station          100+17.78  N     13,776,738.5175  E      2,122,453.0132
Delta        =      53* 07' 48.37" (LT)
Degree       =     409* 15' 20.04"
Tangent      =               7.0000
Length       =              12.9821
Radius       =              14.0000
External     =               1.6525
Long Chord   =              12.5220
Mid. Ord.    =               1.4780
P.C.  Station          100+10.78  N     13,776,737.8934  E      2,122,446.0411
P.T.  Station          100+23.76  N     13,776,744.4697  E      2,122,456.6971
C.C.                              N     13,776,751.8376  E      2,122,444.7927
Back         = N  84* 53' 03.00" E
Ahead        = N  31* 45' 14.63" E
Chord Bear   = N  58* 19' 08.82" E

Course from PT CECDCT3_C008-1 to PC CECDCT3_C008-2 N 31* 45' 14.63" E Dist 103.3274
```

DUCTBANK ALIGNMENT 3 CONTINUED

```
                                   Curve Data
                                  *----------*
Curve CECDCT3_C008-2
P.I.  Station          101+30.09  N     13,776,834.8815  E      2,122,512.6545
Delta        =      90* 00' 00.02" (RT)
Degree       =    1909* 51' 33.54"
Tangent      =               3.0000
Length       =               4.7124
Radius       =               3.0000
External     =               1.2426
Long Chord   =               4.2426
Mid. Ord.    =               0.8787
P.C.  Station          101+27.09  N     13,776,832.3306  E      2,122,511.0757
P.T.  Station          101+31.80  N     13,776,833.3027  E      2,122,515.2055
C.C.                              N     13,776,830.7518  E      2,122,513.6266
Back         = N  31* 45' 14.63" E
Ahead        = S  58* 14' 45.34" E
Chord Bear   = N  76* 45' 14.65" E

Course from PT CECDCT3_C008-2 to PC CECDCT3_C008-3 S 58* 14' 45.34" E Dist 17.0446

                                   Curve Data
                                  *----------*
Curve CECDCT3_C008-3
P.I.  Station          101+51.81  N     13,776,822.7719  E      2,122,532.2204
Delta        =      89* 20' 15.58" (LT)
Degree       =    1909* 51' 33.54"
Tangent      =               2.9655
Length       =               4.6777
Radius       =               3.0000
External     =               1.2183
Long Chord   =               4.2180
Mid. Ord.    =               0.8665
P.C.  Station          101+48.84  N     13,776,824.3326  E      2,122,529.6987
P.T.  Station          101+53.52  N     13,776,825.2753  E      2,122,533.8101
C.C.                              N     13,776,826.8835  E      2,122,531.2776
Back         = S  58* 14' 45.34" E
Ahead        = N  32* 24' 59.08" E
Chord Bear   = N  77* 05' 06.87" E

Course from PT CECDCT3_C008-3 to 5093 N 32* 24' 59.08" E Dist 38.8008

Point 5093              N  13,776,858.0300 E   2,122,554.6100 Sta     101+92.32

================================================================================
Ending chain CECDCT3_C008 description
```

CHANGE ORDER #_____
REVISED DUCTBANK ALIGNMENT 2
FROM STA 100+00 TO STA 101+20.00
CROSSES MAIN DUCTBANK ALIGNMENT
AT ℄ STA 116+88.16

STATE OF TEXAS
Garland C. Galm
66781
REGISTERED PROFESSIONAL ENGINEER

GARLAND C. GALM, P.E.
12/10/2008

NO.	REVISION	BY	DATE

WORK REQUEST NO.	WORK REQUEST TITLE / ADDRESS
3835821	BLANCO RD. CONVERSION

CPS ENERGY
P.O. BOX 1771
SAN ANTONIO, TX 78296

CEC CIVIL ENGINEERING CONSULTANTS SAN ANTONIO, TEXAS

BEXAR COUNTY
PUBLIC WORKS DIVISION

F.M. 2696 (BLANCO ROAD)
CPS ENERGY DUCTBANK
HORIZONTAL
ALIGNMENT DATA

Planned: H.Snaga	Phone: 210-353-3764	SHEET 1 OF 1	
Designed: JR	STATE	BEXAR COUNTY FILE NUMBER	PLAN SET NO. 552A
Checked: GG	TEXAS		
Drawn: PW	COUNTY		OF 842
Checked: JR	BEXAR		

x:\data\txdot\projects\CPS_Blanco\UTILITY\change order dec 08\CEC_CPS_HRZ_CO_12_08.dgn
12/10/2008 1:42:51 PM

DUCTBANK ALIGNMENT 1

```
**        1   DESCRIBE CHAIN CECDUCT_C008
Chain CECDUCT_C008 contains:
5077 5078 5079 CUR CECDUCT_C008-1 CUR CECDUCT_C008-2 5080
5081 5082 5083 5084 5085 5086 5087 5088 5089 5090
 CUR CECDUCT_C008-3 5091

Beginning chain CECDUCT_C008 description
================================================================================

Point 5077              N  13,774,168.2740 E   2,124,562.1002 Sta      99+91.76

Course from 5077 to 5078 N 13° 08' 00.92" W Dist 10.0000

Point 5078              N  13,774,178.0124 E   2,124,559.8279 Sta     100+01.76

Course from 5078 to 5079 N 31° 51' 52.58" E Dist 15.5205

Point 5079              N  13,774,191.1939 E   2,124,568.0214 Sta     100+17.28

Course from 5079 to PC CECDUCT_C008-1 N 13° 08' 00.92" W Dist 123.0253

                                        Curve Data
                                       *----------*
Curve CECDUCT_C008-1
P.I.  Station          103+88.51  N     13,774,552.7132  E      2,124,483.6698
Delta        =      15° 04' 00.00" (LT)
Degree       =       3° 03' 09.89"
Tangent      =            248.2042
Length       =            493.5446
Radius       =          1,876.8600
External     =             16.3407
Long Chord   =            492.1238
Mid. Ord.    =             16.1996
P.C.  Station          101+40.31  N     13,774,311.0013  E      2,124,540.0673
P.T.  Station          106+33.85  N     13,774,771.4559  E      2,124,366.3797
C.C.                              N     13,773,884.5369  E      2,122,712.3005
Back         = N  13° 08' 00.92" W
Ahead        = N  28° 12' 00.92" W
Chord Bear   = N  20° 40' 00.92" W

Course from PT CECDUCT_C008-1 to PC CECDUCT_C008-2 N 28° 12' 00.92" W Dist 818.9200

                                        Curve Data
                                       *----------*
Curve CECDUCT_C008-2
P.I.  Station          119+17.39  N     13,775,902.6447  E      2,123,759.8352
Delta        =      26° 17' 38.77" (LT)
Degree       =       2° 52' 49.23"
Tangent      =            464.6237
Length       =            912.8810
Radius       =          1,989.2000
External     =             53.5412
Long Chord   =            904.8913
Mid. Ord.    =             52.1379
P.C.  Station          114+52.77  N     13,775,493.1712  E      2,123,979.3953
P.T.  Station          123+65.65  N     13,776,172.4903  E      2,123,381.6044
C.C.                              N     13,774,553.1654  E      2,122,226.3106
Back         = N  28° 12' 00.92" W
Ahead        = N  54° 29' 39.69" W
Chord Bear   = N  41° 20' 50.30" W

Course from PT CECDUCT_C008-2 to 5080 N 58° 39' 01.73" W Dist 50.0509

Point 5080              N  13,776,198.5296 E   2,123,338.8604 Sta     124+15.70

Course from 5080 to 5081 N 57° 58' 48.44" W Dist 384.2619

Point 5081              N  13,776,402.2705 E   2,123,013.0585 Sta     127+99.96

Course from 5081 to 5082 N 57° 35' 00.92" W Dist 89.5948

Point 5082              N  13,776,450.2994 E   2,122,937.4249 Sta     128+89.56

Course from 5082 to 5083 N 52° 32' 14.42" W Dist 50.3615

Point 5083              N  13,776,480.9315 E   2,122,897.4505 Sta     129+39.92

Course from 5083 to 5084 N 57° 35' 00.92" W Dist 49.9999

Point 5084              N  13,776,507.7349 E   2,122,855.2418 Sta     129+89.92

Course from 5084 to 5085 N 52° 07' 27.92" W Dist 50.0606

Point 5085              N  13,776,538.4695 E   2,122,815.7267 Sta     130+39.98

Course from 5085 to 5086 N 57° 35' 00.92" W Dist 50.0000

Point 5086              N  13,776,565.2729 E   2,122,773.5180 Sta     130+89.98

Course from 5086 to 5087 N 60° 41' 27.52" W Dist 50.0000

Point 5087              N  13,776,589.7489 E   2,122,729.9184 Sta     131+39.98

Course from 5087 to 5088 N 57° 35' 00.92" W Dist 264.9794

Point 5088              N  13,776,731.7961 E   2,122,506.2296 Sta     134+04.96

Course from 5088 to 5089 N 70° 52' 52.11" W Dist 49.9988

Point 5089              N  13,776,748.1721 E   2,122,458.9886 Sta     134+54.96

Course from 5089 to 5090 N 44° 17' 09.71" W Dist 49.9988

Point 5090              N  13,776,783.9644 E   2,122,424.0774 Sta     135+04.96

Course from 5090 to PC CECDUCT_C008-3 N 57° 35' 00.92" W Dist 9.5883

                                        Curve Data
                                       *----------*
Curve CECDUCT_C008-3
P.I.  Station          139+87.42  N     13,777,042.5953  E      2,122,016.7982
Delta        =      34° 07' 21.44" (RT)
Degree       =       3° 43' 06.95"
Tangent      =            472.8702
Length       =            917.6207
Radius       =          1,540.7900
External     =             70.9296
Long Chord   =            904.1197
Mid. Ord.    =             67.8081
P.C.  Station          135+14.55  N     13,776,789.1044  E      2,122,415.9832
P.T.  Station          144+32.17  N     13,777,476.3741  E      2,121,828.5371
C.C.                              N     13,778,089.7999  E      2,123,241.9524
Back         = N  57° 35' 00.92" W
Ahead        = N  23° 27' 39.48" W
Chord Bear   = N  40° 31' 20.20" W

Course from PT CECDUCT_C008-3 to 5091 N 57° 29' 21.70" W Dist 22.4245

Point 5091              N  13,777,488.4263 E   2,121,809.6268 Sta     144+54.59

================================================================================
Ending chain CECDUCT_C008 description
```

DUCTBANK ALIGNMENT 2

```
**        1   DESCRIBE CHAIN CECDCT2

Chain CECDCT2 contains:
 CECDUCT13 CECDUCT14 CECDUCT15

Beginning chain CECDCT2 description
================================================================================

Point CECDUCT13         N  13,775,649.9313 E   2,123,853.3734 Sta     100+00.00

Course from CECDUCT13 to CECDUCT14 N 56° 43' 55.57" E Dist 60.0044

Point CECDUCT14         N  13,775,682.8470 E   2,123,903.5440 Sta     100+60.00

Course from CECDUCT14 to CECDUCT15 N 56° 43' 55.57" E Dist 60.0044

Point CECDUCT15         N  13,775,715.7627 E   2,123,953.7146 Sta     101+20.01

================================================================================
Ending chain CECDCT2 description
```

DUCTBANK ALIGNMENT 3

```
**        1   DESCRIBE CHAIN CECDCT3

Chain CECDCT3 contains:
 CECDUCT16 CUR CECDCT3-1 CUR CECDCT3-2 CECDUCT17

Beginning chain CECDCT3 description
================================================================================

Point CECDUCT16         N  13,776,731.1647 E   2,122,448.4624 Sta     100+00.00

Course from CECDUCT16 to PC CECDCT3-1 N 31° 45' 14.63" E Dist 118.9746

                                        Curve Data
                                       *----------*
Curve CECDCT3-1
P.I.  Station          101+21.97  N     13,776,834.8815  E      2,122,512.6545
Delta        =      90° 00' 00.02" (RT)
Degree       =    1909° 51' 33.54"
Tangent      =              3.0000
Length       =              4.7124
Radius       =              3.0000
External     =              1.2426
Long Chord   =              4.2426
Mid. Ord.    =              0.8787
P.C.  Station          101+18.97  N     13,776,832.3306  E      2,122,511.0757
P.T.  Station          101+23.69  N     13,776,833.3027  E      2,122,515.2055
C.C.                              N     13,776,830.7518  E      2,122,513.6266
Back         = N  31° 45' 14.63" E
Ahead        = S  58° 14' 45.35" E
Chord Bear   = N  76° 45' 14.64" E

Course from PT CECDCT3-1 to PC CECDCT3-2 S 58° 14' 45.34" E Dist 17.0446

                                        Curve Data
                                       *----------*
Curve CECDCT3-2
P.I.  Station          101+43.70  N     13,776,822.7719  E      2,122,532.2204
Delta        =      89° 20' 15.57" (LT)
Degree       =    1909° 51' 33.54"
Tangent      =              2.9655
Length       =              4.6777
Radius       =              3.0000
External     =              1.2183
Long Chord   =              4.2180
Mid. Ord.    =              0.8665
P.C.  Station          101+40.73  N     13,776,824.3326  E      2,122,529.6987
P.T.  Station          101+45.41  N     13,776,825.2753  E      2,122,533.8101
C.C.                              N     13,776,826.8835  E      2,122,531.2776
Back         = S  58° 14' 45.35" E
Ahead        = N  32° 24' 59.08" E
Chord Bear   = N  77° 05' 06.87" E

Course from PT CECDCT3-2 to CECDUCT17 N 32° 24' 59.08" E Dist 38.8008

Point CECDUCT17         N  13,776,858.0300 E   2,122,554.6100 Sta     101+84.21

================================================================================
Ending chain CECDCT3 description
```

STATE OF TEXAS
Garland C. Galm
66781
REGISTERED PROFESSIONAL ENGINEER

GARLAND C. GALM, P.E.
11/4/2008

CHANGE ORDER #
REVISED DUCTBANK CENTERLINE
FROM STA 99+91.76 TO STA 100+17.28

NO.	REVISION	BY	DATE

WORK REQUEST NO.	WORK REQUEST TITLE / ADDRESS
3835821	BLANCO RD. CONVERSION

CPS ENERGY
P.O. BOX 1771
SAN ANTONIO, TX 78296

CEC CIVIL ENGINEERING CONSULTANTS SAN ANTONIO, TEXAS

BEXAR COUNTY
PUBLIC WORKS DIVISION

F.M. 2696 (BLANCO ROAD)
CPS ENERGY DUCTBANK
HORIZONTAL
ALIGNMENT DATA

Planned: H.Snogo	Phone: 210-353-3764	SHEET 1 OF 1	
Designed: JR	STATE	BEXAR COUNTY FILE NUMBER	PLAN SET NO.
Checked: GG	TEXAS		552A
Drawn: PW	COUNTY		OF
Checked: JR	BEXAR		842

x:\data\txdot\projects\CPS_Blanco\UTILITY\change order ocl e8\CEC_CPS_HRZ_CO_10_08.dgn
11/4/2008 10:36:30 AM

DUCTBANK ALIGNMENT 1

```
1    DESCRIBE CHAIN CECDUCT

Chain CECDUCT contains:
CECDUCT25 CECDUCT26 CECDUCT27 CUR CECDUCT-1 CUR CECDUCT-2
CECDUCT28 CECDUCT29 CECDUCT30 CECDUCT31 CECDUCT32 CECDUCT33
CECDUCT34 CECDUCT35 CECDUCT36 CECDUCT37- CECDUCT38
CUR CECDUCT-3 CECDUCT39


Beginning chain CECDUCT description
===================================================================================

Point CECDUCT25        N  13,774,167.7342 E   2,124,559.7866 Sta      99+90.00

Course from CECDUCT25 to CECDUCT26 N 13 33/64  08' 00.92" W Dist 10.0000

Point CECDUCT26        N  13,774,177.4726 E   2,124,557.5144 Sta     100+00.00

Course from CECDUCT26 to CECDUCT27 N 37 33/64  26' 34.37" E Dist 17.2822

Point CECDUCT27        N  13,774,191.1939 E   2,124,568.0214 Sta     100+17.28

Course from CECDUCT27 to PC CECDUCT-1 N 13 33/64  08' 00.92" W Dist 123.0253

                                        Curve Data
                                      *----------*
Curve CECDUCT-1
P.I.  Station                103+88.51  N      13,774,552.7132  E      2,124,483.6698
Delta        =        15 33/64  04' 00.00" (LT)
Degree       =         3 33/64  03' 09.89"
Tangent      =                 248.2042
Length       =                 493.5446
Radius       =               1,876.8600
External     =                  16.3407
Long Chord   =                 492.1238
Mid. Ord.    =                  16.1996
P.C.  Station                101+40.31  N      13,774,311.0013  E      2,124,540.0673
P.T.  Station                106+33.85  N      13,774,771.4559  E      2,124,366.3797
C.C.                                    N      13,773,884.5369  E      2,122,712.3005
Back         = N  13 33/64  08' 00.92" W
Ahead        = N  28 33/64  12' 00.92" W
Chord Bear   = N  20 33/64  40' 00.92" W

Course from PT CECDUCT-1 to PC CECDUCT-2 N 28 33/64  12' 00.92" W Dist 818.9200

                                        Curve Data
                                      *----------*
Curve CECDUCT-2
P.I.  Station                119+17.40  N      13,775,902.6447  E      2,123,759.8352
Delta        =        26 33/64  17' 38.77" (LT)
Degree       =         2 33/64  52' 49.23"
Tangent      =                 464.6237
Length       =                 912.8810
Radius       =               1,989.2000
External     =                  53.5412
Long Chord   =                 904.8913
Mid. Ord.    =                  52.1379
P.C.  Station                114+52.77  N      13,775,493.1712  E      2,123,979.3953
P.T.  Station                123+65.65  N      13,776,172.4903  E      2,123,381.6044
C.C.                                    N      13,774,553.1654  E      2,122,226.3106
Back         = N  28 33/64  12' 00.92" W
Ahead        = N  54 33/64  29' 39.69" W
Chord Bear   = N  41 33/64  20' 50.30" W

Course from PT CECDUCT-2 to CECDUCT28 N 58 33/64  39' 01.73" W Dist 50.0509

Point CECDUCT28        N  13,776,198.5296 E   2,123,338.8604 Sta     124+15.70

Course from CECDUCT28 to CECDUCT29 N 57 33/64  58' 48.44" W Dist 384.2619

Point CECDUCT29        N  13,776,402.2705 E   2,123,013.0585 Sta     127+99.97

Course from CECDUCT29 to CECDUCT30 N 57 33/64  35' 00.92" W Dist 89.5948

Point CECDUCT30        N  13,776,450.2994 E   2,122,937.4249 Sta     128+89.56

Course from CECDUCT30 to CECDUCT31 N 52 33/64  32' 14.42" W Dist 50.3615

Point CECDUCT31        N  13,776,480.9315 E   2,122,897.4505 Sta     129+39.92

Course from CECDUCT31 to CECDUCT32 N 57 33/64  35' 00.92" W Dist 49.9999

Point CECDUCT32        N  13,776,507.7349 E   2,122,855.2418 Sta     129+89.92

Course from CECDUCT32 to CECDUCT33 N 52 33/64  07' 27.92" W Dist 50.0606

Point CECDUCT33        N  13,776,538.4695 E   2,122,815.7267 Sta     130+39.98

Course from CECDUCT33 to CECDUCT34 N 57 33/64  35' 00.92" W Dist 50.0000

Point CECDUCT34        N  13,776,565.2729 E   2,122,773.5180 Sta     130+89.98

Course from CECDUCT34 to CECDUCT35 N 60 33/64  41' 27.52" W Dist 50.0000

Point CECDUCT35        N  13,776,589.7489 E   2,122,729.9184 Sta     131+39.98

Course from CECDUCT35 to CECDUCT36 N 57 33/64  35' 00.92" W Dist 264.9794

Point CECDUCT36        N  13,776,731.7961 E   2,122,506.2296 Sta     134+04.96

Course from CECDUCT36 to CECDUCT37 N 70 33/64  52' 52.11" W Dist 49.9988

Point CECDUCT37        N  13,776,748.1721 E   2,122,458.9886 Sta     134+54.96

Course from CECDUCT37 to CECDUCT38 N 44 33/64  17' 09.71" W Dist 49.9988

Point CECDUCT38        N  13,776,783.9644 E   2,122,424.0774 Sta     135+04.96

Course from CECDUCT38 to PC CECDUCT-3 N 57 33/64  35' 00.92" W Dist 9.5883

                                        Curve Data
                                      *----------*
Curve CECDUCT-3
P.I.  Station                139+87.42  N      13,777,042.5953  E      2,122,016.7982
Delta        =        34 33/64  07' 21.44" (RT)
Degree       =         3 33/64  43' 06.95"
Tangent      =                 472.8702
Length       =                 917.6207
Radius       =               1,540.7900
External     =                  70.9296
Long Chord   =                 904.1197
Mid. Ord.    =                  67.8081
P.C.  Station                135+14.55  N      13,776,789.1044  E      2,122,415.9832
P.T.  Station                144+32.17  N      13,777,476.3741  E      2,121,828.5371
C.C.                                    N      13,778,089.7999  E      2,123,241.9524
Back         = N  57 33/64  35' 00.92" W
Ahead        = N  23 33/64  27' 39.48" W
Chord Bear   = N  40 33/64  31' 20.20" W

Course from PT CECDUCT-3 to CECDUCT39 N 57 33/64  29' 21.70" W Dist 22.4245

Point CECDUCT39        N  13,777,488.4263 E   2,121,809.6268 Sta     144+54.59

===================================================================================
                    Ending chain CECDUCT description
```

DUCTBANK ALIGNMENT 1 CONTINUED

```
                                        Curve Data
                                      *----------*
Curve CECDUCT-3
P.I.  Station                139+97.42  N      13,777,042.5953  E      2,122,016.7982
Delta        =        34° 07' 21.44" (RT)
Degree       =         3° 43' 06.95"
Tangent      =                 472.8702
Length       =                 917.6207
Radius       =               1,540.7900
External     =                  70.9296
Long Chord   =                 904.1197
Mid. Ord.    =                  67.8081
P.C.  Station                135+24.55  N      13,776,789.1044  E      2,122,415.9832
P.T.  Station                144+42.17  N      13,777,476.3741  E      2,121,828.5371
C.C.                                    N      13,778,089.7999  E      2,123,241.9524
Back         = N  57° 35' 00.92" W
Ahead        = N  23° 27' 39.48" W
Chord Bear   = N  40° 31' 20.20" W

Course from PT CECDUCT-3 to CECDUCT39 N 57° 29' 21.70" W Dist 22.4245

Point CECDUCT39        N  13,777,488.4263 E   2,121,809.6268 Sta     144+64.59

===================================================================================
                    Ending chain CECDUCT description
```

DUCTBANK ALIGNMENT 2

```
**     1    DESCRIBE CHAIN CECDCT2

Chain CECDCT2 contains:
 CECDUCT13 CECDUCT14 CECDUCT15

Beginning chain CECDCT2 description
===================================================================================

Point CECDUCT13        N  13,775,649.9313 E   2,123,853.3734 Sta     100+00.00

Course from CECDUCT13 to CECDUCT14 N 56° 43' 55.57" E Dist 60.0044

Point CECDUCT14        N  13,775,682.8470 E   2,123,903.5440 Sta     100+60.00

Course from CECDUCT14 to CECDUCT15 N 56° 43' 55.57" E Dist 60.0044

Point CECDUCT15        N  13,775,715.7627 E   2,123,953.7146 Sta     101+20.01

===================================================================================
Ending chain CECDCT2 description
```

DUCTBANK ALIGNMENT 3

```
**     1    DESCRIBE CHAIN CECDCT3

Chain CECDCT3 contains:
 CECDUCT16 CUR CECDCT3-1 CUR CECDCT3-2 CECDUCT17

Beginning chain CECDCT3 description
===================================================================================

Point CECDUCT16        N  13,776,731.1647 E   2,122,448.4624 Sta     100+00.00

Course from CECDUCT16 to PC CECDCT3-1 N 31° 45' 14.63" E Dist 118.9746

                                        Curve Data
                                      *----------*
Curve CECDCT3-1
P.I.  Station                101+21.97  N      13,776,834.8815  E      2,122,512.6545
Delta        =         90° 00' 00.02" (RT)
Degree       =      1909° 51' 33.54"
Tangent      =                   3.0000
Length       =                   4.7124
Radius       =                   3.0000
External     =                   1.2426
Long Chord   =                   4.2426
Mid. Ord.    =                   0.8787
P.C.  Station                101+18.97  N      13,776,832.3306  E      2,122,511.0757
P.T.  Station                101+23.69  N      13,776,833.3027  E      2,122,515.2055
C.C.                                    N      13,776,830.7518  E      2,122,513.6266
Back         = N  31° 45' 14.63" E
Ahead        = S  58° 14' 45.35" E
Chord Bear   = N  76° 45' 14.64" E

Course from PT CECDCT3-1 to PC CECDCT3-2 S 58° 14' 45.34" E Dist 17.0446

                                        Curve Data
                                      *----------*
Curve CECDCT3-2
P.I.  Station                101+43.70  N      13,776,822.7719  E      2,122,532.2204
Delta        =         89° 20' 15.57" (LT)
Degree       =      1909° 51' 33.54"
Tangent      =                   2.9655
Length       =                   4.6777
Radius       =                   3.0000
External     =                   1.2183
Long Chord   =                   4.2180
Mid. Ord.    =                   0.8665
P.C.  Station                101+40.73  N      13,776,824.3326  E      2,122,529.6987
P.T.  Station                101+45.41  N      13,776,825.2753  E      2,122,533.8101
C.C.                                    N      13,776,826.8835  E      2,122,531.2776
Back         = S  58° 14' 45.35" E
Ahead        = N  32° 24' 59.08" E
Chord Bear   = N  77° 05' 06.87" E

Course from PT CECDCT3-2 to CECDUCT17 N 32° 24' 59.08" E Dist 38.8008

Point CECDUCT17        N  13,776,858.0300 E   2,122,554.6100 Sta     101+84.21

===================================================================================
Ending chain CECDCT3 description
```

STATE OF TEXAS
Garland C. Galm
66781
REGISTERED PROFESSIONAL ENGINEER

GARLAND C. GALM, P.E.
8/29/2008

NO.	REVISION	BY	DATE

WORK REQUEST NO.	WORK REQUEST TITLE / ADDRESS
3835821	BLANCO RD. CONVERSION

CPS ENERGY
P.O. BOX 1771
SAN ANTONIO, TX 78296

CEC — CIVIL ENGINEERING CONSULTANTS, SAN ANTONIO, TEXAS

BEXAR COUNTY
PUBLIC WORKS DIVISION

F.M. 2696 (BLANCO ROAD)
CPS ENERGY DUCTBANK
HORIZONTAL
ALIGNMENT DATA

Planned: H.Snogo	Phone: 210-353-3764		SHEET 1 OF 1
Designed: JR	STATE	BEXAR COUNTY FILE NUMBER	PLAN SET NO.
Checked: GG	TEXAS		552A
Drawn: PW	COUNTY		OF
Checked: JR	BEXAR		042

x:\data\texas\projects\CPS_Blanco\UTILITY\CEC_CPS_HRZ.DGN dgn
8/29/2008 9:04:00 AM

DUCTBANK ALIGNMENT 1

** 1 DESCRIBE CHAIN CECDUCT

Chain CECDUCT contains:
CECDUCT25 CECDUCT26 CECDUCT27 CUR CECDUCT-1 CUR CECDUCT-2 CECDUCT28 CECDUCT29 - CECDUCT30 CECDUCT31 CECDUCT32 CECDUCT33 CECDUCT34 CECDUCT35 CECDUCT36 CECDUCT37- CECDUCT38 CUR CECDUCT-3 CECDUCT39

Beginning chain CECDUCT description

==========

Point CECDUCT25 N 13,774,167.7342 E 2,124,559.7866 Sta 100+00.00

Course from CECDUCT25 to CECDUCT26 N 13° 08' 00.92" W Dist 10.0000

Point CECDUCT26 N 13,774,177.4726 E 2,124,557.5144 Sta 100+10.00

Course from CECDUCT26 to CECDUCT27 N 37° 26' 34.37" E Dist 17.2822

Point CECDUCT27 N 13,774,191.1939 E 2,124,568.0214 Sta 100+27.28

Course from CECDUCT27 to PC CECDUCT-1 N 13° 08' 00.92" W Dist 123.0253

Curve Data

```
Curve CECDUCT-1
P.I.  Station          103+98.51  N     13,774,552.7132  E     2,124,483.6698
Delta        =      15° 04' 00.00" (LT)
Degree       =       3° 03' 09.89"
Tangent      =            248.2042
Length       =            493.5446
Radius       =          1,876.8600
External     =             16.3407
Long Chord   =            492.1238
Mid. Ord.    =             16.1996
P.C.  Station          101+50.31  N     13,774,311.0013  E     2,124,540.0673
P.T.  Station          106+43.85  N     13,774,771.4559  E     2,124,366.3797
C.C.                              N     13,773,884.5369  E     2,122,712.3005
Back         = N  13° 08' 00.92" W
Ahead        = N  28° 12' 00.92" W
Chord Bear   = N  20° 40' 00.92" W
```

Course from PT CECDUCT-1 to PC CECDUCT-2 N 28° 12' 00.92" W Dist 818.9200

Curve Data

```
Curve CECDUCT-2
P.I.  Station          119+27.40  N     13,775,902.6447  E     2,123,759.8352
Delta        =      26° 17' 38.77" (LT)
Degree       =       2° 52' 49.23"
Tangent      =            464.6237
Length       =            912.8810
Radius       =          1,989.2000
External     =             53.5412
Long Chord   =            904.8913
Mid. Ord.    =             52.1379
P.C.  Station          114+62.77  N     13,775,493.1712  E     2,123,979.3953
P.T.  Station          123+75.65  N     13,776,172.4903  E     2,123,381.6044
C.C.                              N     13,774,553.1654  E     2,122,226.3106
Back         = N  28° 12' 00.92" W
Ahead        = N  54° 29' 39.69" W
Chord Bear   = N  41° 20' 50.30" W
```

Course from PT CECDUCT-2 to CECDUCT28 N 58° 39' 01.73" W Dist 50.0509

Point CECDUCT28 N 13,776,198.5296 E 2,123,338.8604 Sta 124+25.70

Course from CECDUCT28 to CECDUCT29 N 57° 58' 48.44" W Dist 384.2619

Point CECDUCT29 N 13,776,402.2705 E 2,123,013.0585 Sta 128+09.97

Course from CECDUCT29 to CECDUCT30 N 57° 35' 00.92" W Dist 89.5948

Point CECDUCT30 N 13,776,450.2994 E 2,122,937.4249 Sta 128+99.56

Course from CECDUCT30 to CECDUCT31 N 52° 32' 14.42" W Dist 50.3615

Point CECDUCT31 N 13,776,480.9315 E 2,122,897.4505 Sta 129+49.92

Course from CECDUCT31 to CECDUCT32 N 57° 35' 00.92" W Dist 49.9999

Point CECDUCT32 N 13,776,507.7349 E 2,122,855.2418 Sta 129+99.92

Course from CECDUCT32 to CECDUCT33 N 52° 07' 27.92" W Dist 50.0606

Point CECDUCT33 N 13,776,538.4695 E 2,122,815.7267 Sta 130+49.98

Course from CECDUCT33 to CECDUCT34 N 57° 35' 00.92" W Dist 50.0000

Point CECDUCT34 N 13,776,565.2729 E 2,122,773.5180 Sta 130+99.98

Course from CECDUCT34 to CECDUCT35 N 60° 41' 27.52" W Dist 50.0000

Point CECDUCT35 N 13,776,589.7489 E 2,122,729.9184 Sta 131+49.98

Course from CECDUCT35 to CECDUCT36 N 57° 35' 00.92" W Dist 264.9794

Point CECDUCT36 N 13,776,731.7961 E 2,122,506.2296 Sta 134+14.96

Course from CECDUCT36 to CECDUCT37 N 70° 52' 52.11" W Dist 49.9988

Point CECDUCT37 N 13,776,748.1721 E 2,122,458.9886 Sta 134+64.96

Course from CECDUCT37 to CECDUCT38 N 44° 17' 09.71" W Dist 49.9988

Point CECDUCT38 N 13,776,783.9644 E 2,122,424.0774 Sta 135+14.96

Course from CECDUCT38 to PC CECDUCT-3 N 57° 35' 00.92" W Dist 9.5883

DUCTBANK ALIGNMENT 1 CONTINUED

Curve Data

```
Curve CECDUCT-3
P.I.  Station          139+97.42  N     13,777,042.5953  E     2,122,016.7982
Delta        =      34° 07' 21.44" (RT)
Degree       =       3° 43' 06.95"
Tangent      =            472.8702
Length       =            917.6207
Radius       =          1,540.7900
External     =             70.9296
Long Chord   =            904.1197
Mid. Ord.    =             67.8081
P.C.  Station          135+24.55  N     13,776,789.1044  E     2,122,415.9832
P.T.  Station          144+42.17  N     13,777,476.3741  E     2,121,828.5371
C.C.                              N     13,778,089.7999  E     2,123,241.9524
Back         = N  57° 35' 00.92" W
Ahead        = N  23° 27' 39.48" W
Chord Bear   = N  40° 31' 20.20" W
```

Course from PT CECDUCT-3 to CECDUCT39 N 57° 29' 21.70" W Dist 22.4245

Point CECDUCT39 N 13,777,488.4263 E 2,121,809.6268 Sta 144+64.59

==========

Ending chain CECDUCT description

DUCTBANK ALIGNMENT 2

** 1 DESCRIBE CHAIN CECDCT2

Chain CECDCT2 contains:
CECDUCT13 CECDUCT14 CECDUCT15

Beginning chain CECDCT2 description

==========

Point CECDUCT13 N 13,775,649.9313 E 2,123,853.3734 Sta 100+00.00

Course from CECDUCT13 to CECDUCT14 N 56° 43' 55.57" E Dist 60.0044

Point CECDUCT14 N 13,775,682.8470 E 2,123,903.5440 Sta 100+60.00

Course from CECDUCT14 to CECDUCT15 N 56° 43' 55.57" E Dist 60.0044

Point CECDUCT15 N 13,775,715.7627 E 2,123,953.7146 Sta 101+20.01

==========

Ending chain CECDCT2 description

DUCTBANK ALIGNMENT 3

** 1 DESCRIBE CHAIN CECDCT3

Chain CECDCT3 contains:
CECDUCT16 CUR CECDCT3-1 CUR CECDCT3-2 CECDUCT17

Beginning chain CECDCT3 description

==========

Point CECDUCT16 N 13,776,731.1647 E 2,122,448.4624 Sta 100+00.00

Course from CECDUCT16 to PC CECDCT3-1 N 31° 45' 14.63" E Dist 118.9746

Curve Data

```
Curve CECDCT3-1
P.I.  Station          101+21.97  N     13,776,834.8815  E     2,122,512.6545
Delta        =      90° 00' 00.02" (RT)
Degree       =    1909° 51' 33.54"
Tangent      =              3.0000
Length       =              4.7124
Radius       =              3.0000
External     =              1.2426
Long Chord   =              4.2426
Mid. Ord.    =              0.8787
P.C.  Station          101+18.97  N     13,776,832.3306  E     2,122,511.0757
P.T.  Station          101+23.69  N     13,776,833.3027  E     2,122,515.2055
C.C.                              N     13,776,830.7518  E     2,122,513.6266
Back         = N  31° 45' 14.63" E
Ahead        = S  58° 14' 45.35" E
Chord Bear   = N  76° 45' 14.64" E
```

Course from PT CECDCT3-1 to PC CECDCT3-2 S 58° 14' 45.34" E Dist 17.0446

Curve Data

```
Curve CECDCT3-2
P.I.  Station          101+43.70  N     13,776,822.7719  E     2,122,532.2204
Delta        =      89° 20' 15.57" (LT)
Degree       =    1909° 51' 33.54"
Tangent      =              2.9655
Length       =              4.6777
Radius       =              3.0000
External     =              1.2183
Long Chord   =              4.2180
Mid. Ord.    =              0.8665
P.C.  Station          101+40.73  N     13,776,824.3326  E     2,122,529.6987
P.T.  Station          101+45.41  N     13,776,825.2753  E     2,122,533.8101
C.C.                              N     13,776,826.8835  E     2,122,531.2776
Back         = S  58° 14' 45.35" E
Ahead        = N  32° 24' 59.08" E
Chord Bear   = N  77° 05' 06.87" E
```

Course from PT CECDCT3-2 to CECDUCT17 N 32° 24' 59.08" E Dist 38.8008

Point CECDUCT17 N 13,776,858.0300 E 2,122,554.6100 Sta 101+84.21

==========

Ending chain CECDCT3 description

STATE OF TEXAS
Garland C. Galm
66781
REGISTERED PROFESSIONAL ENGINEER

GARLAND C. GALM, P.E.
12/7/2007

NO.	REVISION	BY	DATE

WORK REQUEST NO.	WORK REQUEST TITLE / ADDRESS
3835821	BLANCO RD. CONVERSION

CPS ENERGY
P.O. BOX 1771
SAN ANTONIO, TX 78296

CEC CIVIL ENGINEERING CONSULTANTS SAN ANTONIO, TEXAS

BEXAR COUNTY
PUBLIC WORKS DIVISION

F.M. 2696 (BLANCO ROAD)
CPS ENERGY DUCTBANK
HORIZONTAL
ALIGNMENT DATA

Planned: H.Snogo	Phone: 210-353-3764	SHEET 1 OF 1	
Designed: JR	STATE	BEXAR COUNTY FILE NUMBER	PLAN SET NO. 552A
Checked: GG	TEXAS		
Drawn: PW	COUNTY		OF 842
Checked: JR	BEXAR		

x:\data\txdot\projects\CPS_Blanco\UTILITY\CEC_CPS_HR2.DGN.dgn
12/7/2007 9:56:44 AM

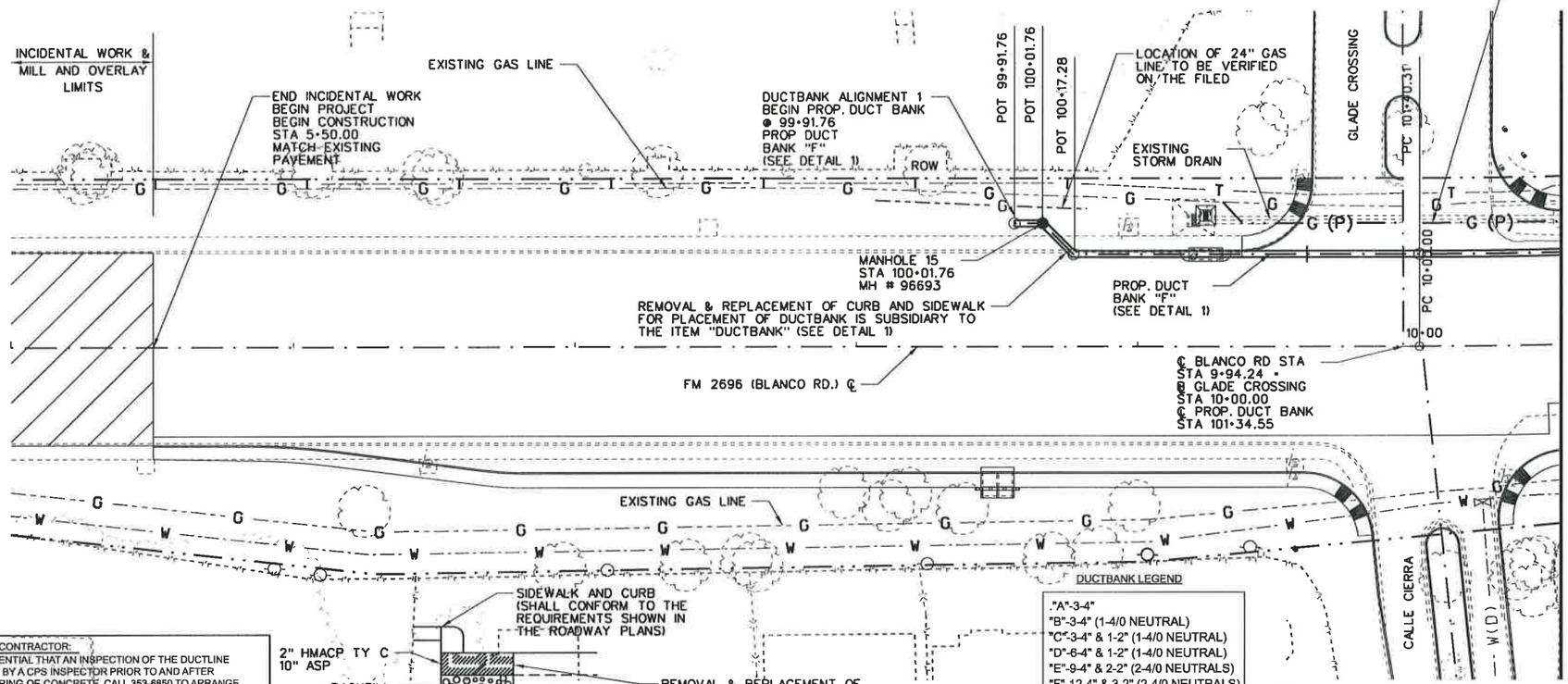

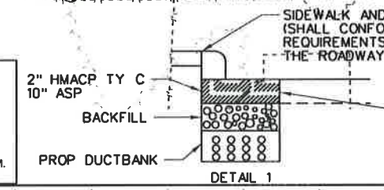

DETAIL 1

NOTE TO CONTRACTOR:
IT IS ESSENTIAL THAT AN INSPECTION OF THE DUCTLINE BE MADE BY A CPS INSPECTOR PRIOR TO AND AFTER THE POURING OF CONCRETE. CALL 353-6850 TO ARRANGE FOR THE INSPECTION. TWENTY-FOUR HOURS ADVANCE NOTICE IS REQUIRED. WHEN CALLING FOR AN INSPECTION BE PREPARED TO REFERENCE JOB NUMBER AND ADDRESS SHOWN ON THIS COPY. CALL BETWEEN 8:00 A.M. AND 4:00 P.M. MONDAY - FRIDAY.

DUCTBANK LEGEND

"A"-3-4"
"B"-3-4" (1-4/0 NEUTRAL)
"C"-3-4" & 1-2" (1-4/0 NEUTRAL)
"D"-6-4" & 1-2" (1-4/0 NEUTRAL)
"E"-9-4" & 2-2" (2-4/0 NEUTRALS)
"F"-12-4" & 3-2" (2-4/0 NEUTRALS)
"G"-12-4" & 1-2"(3-4/0 NEUTRALS)

SEE TYPICAL DUCTLINE DETAILS ON SHT. 2 OF 2

NOTES:
1. THE CONTRACTOR SHALL BE RESPONSIBLE FOR COORDINATING LOCATIONS OF ALL EXISTING AND PROPOSED UTILITIES PRIOR TO EXCAVATING. ALL SUBSURFACE UTILITIES AND DRAINAGE FEATURES SHOWN ARE BASED ON INFORMATION PROVIDED ON CROSS SECTIONS DEVELOPED FOR THE ROADWAY PLANS.

25 12.5 0 25 50
HORIZ. SCALE FEET

5 2.5 0 5 10
VERT. SCALE FEET

LEGEND

—— OE ——	OVERHEAD ELECTRIC LINE
—— CVT ——	CABLE TV LINE
— W —	WATER LINE
— — E — —	UNDERGROUND ELECTRIC LINE
— — T — —	UNDERGROUND TELEPHONE LINE
— — G — —	EXISTING GAS LINE
— — G (P) — —	PROPOSED GAS LINE
— — S.S — —	SANITARY SEWER LINE
— — WW(C) — —	WASTE WATER CLAY PIPE
— — FOC — —	FIBER OPTIC CABLE
— — TS — —	TRAFFIC SIGNALS
●	PROP. MANHOLE
═══	PROP. DUCT BANK

IMPORTANT
EXCAVATION SAFETY PLAN AND PROCEDURES

CITY PUBLIC SERVICE (CPS) CONSTRUCTION PERSONNEL OR CPS' CONTRACTOR (IN THE CASE OF CONTRACTED PROJECTS) SHALL REVIEW THESE PLANS, SKETCHES, SPECIFICATIONS AND ANTICIPATED EXCAVATION SITES WITHIN THE PROJECT WORK AREA IN ORDER TO IDENTIFY EXCAVATIONS THAT WILL REQUIRE AN EXCAVATION SAFETY PLAN AND PROCEDURE. THE EXCAVATION SAFETY PLAN AND PROCEDURES SHALL MEET OR EXCEED ALL REQUIREMENTS AS IDENTIFIED IN THE OCCUPATIONAL SAFETY AND HEALTH ADMINISTRATION'S (OSHA) STANDARD 29 CFR PART 1926 SUBPART P-EXCAVATIONS (7-1-94 EDITION). SPECIFICALLY, THE RESPONSIBLE PARTY SHALL DEVELOP AND IMPLEMENT AN EXCAVATION SAFETY PROGRAM IN ACCORDANCE WITH OSHA'S STANDARDS GOVERNING THE PRESENCE AND ACTIVITES OF INDIVIDUALS WORKING IN AND AROUND ANY EXCAVATION.

CONSTRUCTION NOTES
ALL FIELD CHANGES MUST BE APPROVED BY ENGINEERING. PLEASE CALL PLANNER IF ANY CHANGES ARE NECESSARY. CONSTRUCTION TO LOCATE AND VERIFY ALL UTILITIES PRIOR TO CONSTRUCTION.

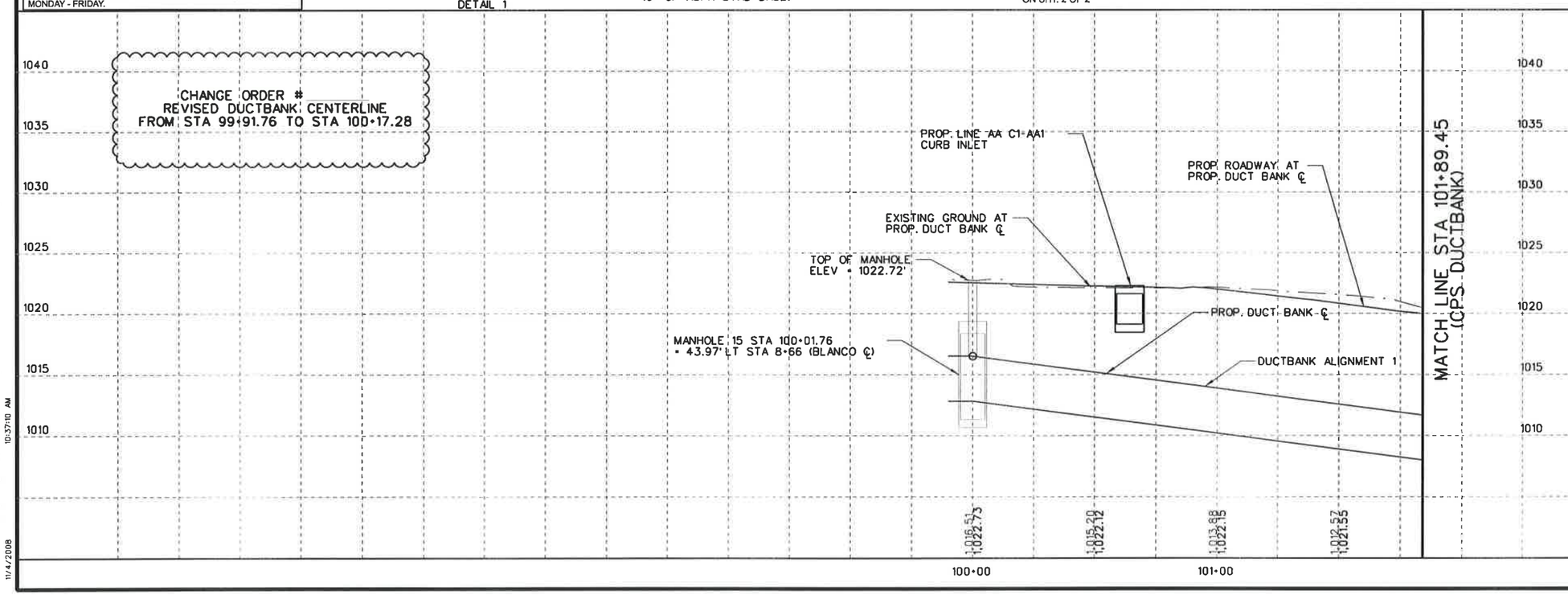

STATE OF TEXAS
Garland C. Galm
66781
REGISTERED PROFESSIONAL ENGINEER

GARLAND C. GALM, P.E.
11/4/2008

NO.	REVISION	BY	DATE

WORK REQUEST NO.	WORK REQUEST TITLE / ADDRESS
3835821	BLANCO RD. CONVERSION

CPS ENERGY
P.O. BOX 1771
SAN ANTONIO, TX 78296

CEC
CIVIL ENGINEERING CONSULTANTS
SAN ANTONIO, TEXAS

BEXAR COUNTY
PUBLIC WORKS DIVISION

F.M. 2696 (BLANCO ROAD)
DUCTBANK
PLAN AND PROFILE
STA 5+00.00 TO STA 101+90.31

H.Snoga 210-353-3764 SHEET 1 OF 9

Designed: JR	STATE	BEXAR COUNTY FILE NUMBER	PLAN SET NO.
Checked: GG	TEXAS		553
Drawn: PW	COUNTY		OF
Checked: JR	BEXAR		842

x:\data\txdot\projects\CPS_Blanco\UTILITY\change order oct 08\DuctbankPP01_C010_08.dgn
10:37:10 AM
11/4/2008

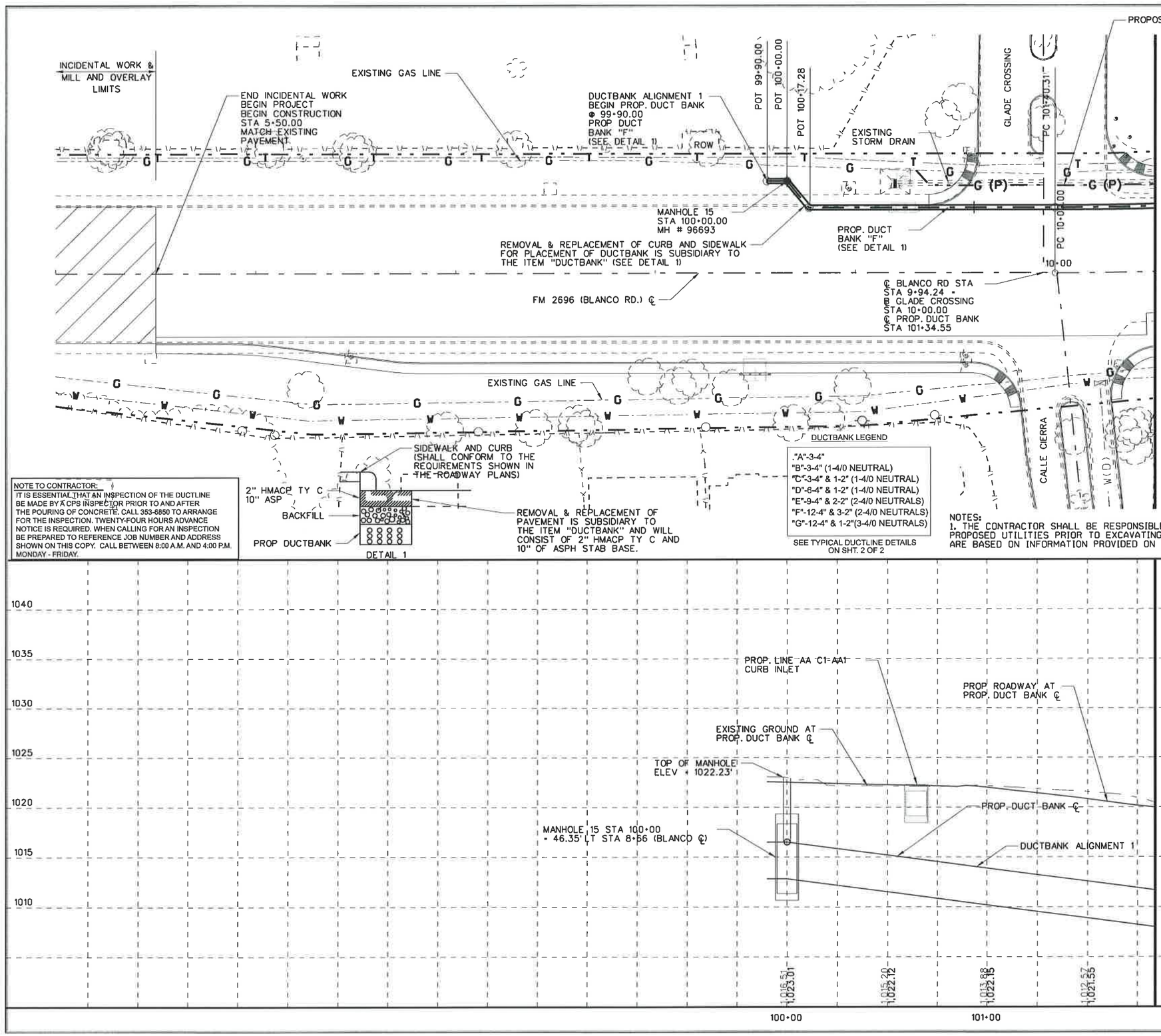

NOTE TO CONTRACTOR:
IT IS ESSENTIAL THAT AN INSPECTION OF THE DUCTLINE BE MADE BY A CPS INSPECTOR PRIOR TO AND AFTER THE POURING OF CONCRETE. CALL 353-6850 TO ARRANGE FOR THE INSPECTION. TWENTY-FOUR HOURS ADVANCE NOTICE IS REQUIRED. WHEN CALLING FOR AN INSPECTION BE PREPARED TO REFERENCE JOB NUMBER AND ADDRESS SHOWN ON THIS COPY. CALL BETWEEN 8:00 A.M. AND 4:00 P.M. MONDAY - FRIDAY.

NOTES:
1. THE CONTRACTOR SHALL BE RESPONSIBLE FOR COORDINATING LOCATIONS OF ALL EXISTING AND PROPOSED UTILITIES PRIOR TO EXCAVATING. ALL SUBSURFACE UTILITIES AND DRAINAGE FEATURES SHOWN ARE BASED ON INFORMATION PROVIDED ON CROSS SECTIONS DEVELOPED FOR THE ROADWAY PLANS.

IMPORTANT
EXCAVATION SAFETY PLAN AND PROCEDURES

CITY PUBLIC SERVICE (CPS) CONSTRUCTION PERSONNEL OR CPS' CONTRACTOR (IN THE CASE OF CONTRACTED PROJECTS) SHALL REVIEW THESE PLANS, SKETCHES, SPECIFICATIONS AND ANTICIPATED EXCAVATION SITES WITHIN THE PROJECT WORK AREA IN ORDER TO IDENTIFY EXCAVATIONS THAT WILL REQUIRE AN EXCAVATION SAFETY PLAN AND PROCEDURE. THE EXCAVATION SAFETY PLAN AND PROCEDURES SHALL MEET OR EXCEED ALL REQUIREMENTS AS IDENTIFIED IN THE OCCUPATIONAL SAFETY AND HEALTH ADMINISTRATION'S (OSHA) STANDARD 29 CFR PART 1926 SUBPART P-EXCAVATIONS (7-1-94 EDITION). SPECIFICALLY, THE RESPONSIBLE PARTY SHALL DEVELOP AND IMPLEMENT AN EXCAVATION SAFETY PROGRAM IN ACCORDANCE WITH OSHA'S STANDARDS GOVERNING THE PRESENCE AND ACTIVITES OF INDIVIDUALS WORKING IN AND AROUND ANY EXCAVATION.

CONSTRUCTION NOTES
ALL FIELD CHANGES MUST BE APPROVED BY ENGINEERING. PLEASE CALL PLANNER IF ANY CHANGES ARE NECESSARY. CONSTRUCTION TO LOCATE AND VERIFY ALL UTILITIES PRIOR TO CONSTRUCTION.

STATE OF TEXAS
Garland C. Galm
66781
REGISTERED PROFESSIONAL ENGINEER

GARLAND C. GALM, P.E.
11/30/2007

NO.	REVISION	BY	DATE

WORK REQUEST NO.	WORK REQUEST TITLE / ADDRESS
3835821	BLANCO RD. CONVERSION

CPS ENERGY
P.O. BOX 1771
SAN ANTONIO, TX 78296

CEC
CIVIL ENGINEERING CONSULTANTS
SAN ANTONIO, TEXAS

BEXAR COUNTY
PUBLIC WORKS DIVISION

F.M. 2696 (BLANCO ROAD)
DUCTBANK PLAN AND PROFILE
STA 5+00.00 TO STA 101+90.31

H.Snoga 210-353-3764 SHEET 1 OF 9

Designed: JR	STATE	BEXAR COUNTY FILE NUMBER	PLAN SET NO.
Checked: GG	TEXAS		553
Drawn: PW	COUNTY		OF
Checked: JR	BEXAR		842

.../UTILITY/DuctbankPP01.dgn 11/30/2007 3:57:20 PM

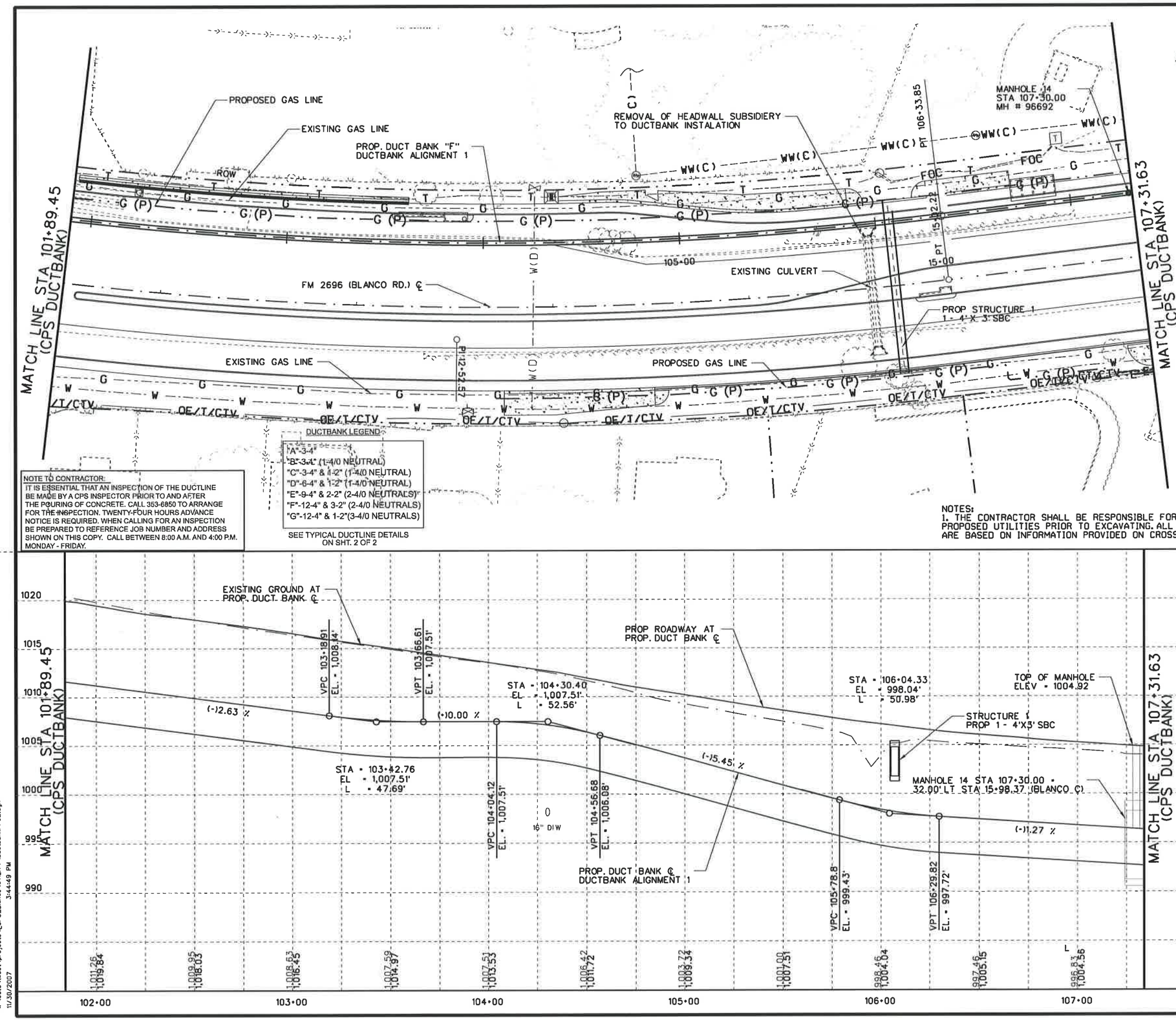

25 12.5 0 25 50
HORIZ. SCALE FEET

5 2.5 0 5 10
VERT. SCALE FEET

LEGEND

OE	OVERHEAD ELECTRIC LINE
CVT	CABLE TV LINE
W	WATER LINE
E	UNDERGROUND ELECTRIC LINE
T	UNDERGROUND TELEPHONE LINE
G	EXISTING GAS LINE
G (P)	PROPOSED GAS LINE
S.S	SANITARY SEWER LINE
WW(C)	WASTE WATER CLAY PIPE
FOC	FIBER OPTIC CABLE
TS	TRAFFIC SIGNALS
●	PROP. MANHOLE
	PROP. DUCT BANK

IMPORTANT
EXCAVATION SAFETY PLAN AND PROCEDURES

CITY PUBLIC SERVICE (CPS) CONSTRUCTION PERSONNEL OR CPS' CONTRACTOR (IN THE CASE OF CONTRACTED PROJECTS) SHALL REVIEW THESE PLANS, SKETCHES, SPECIFICATIONS AND ANTICIPATED EXCAVATION SITES WITHIN THE PROJECT WORK AREA IN ORDER TO IDENTIFY EXCAVATIONS THAT WILL REQUIRE AN EXCAVATION SAFETY PLAN AND PROCEDURE. THE EXCAVATION SAFETY PLAN AND PROCEDURES SHALL MEET OR EXCEED ALL REQUIREMENTS AS IDENTIFIED IN THE OCCUPATIONAL SAFETY AND HEALTH ADMINISTRATION'S (OSHA) STANDARD 29 CFR PART 1926 SUBPART P-EXCAVATIONS (7-1-94 EDITION). SPECIFICALLY, THE RESPONSIBLE PARTY SHALL DEVELOP AND IMPLEMENT AN EXCAVATION SAFETY PROGRAM IN ACCORDANCE WITH OSHA'S STANDARDS GOVERNING THE PRESENCE AND ACTIVITES OF INDIVIDUALS WORKING IN AND AROUND ANY EXCAVATION.

CONSTRUCTION NOTES

ALL FIELD CHANGES MUST BE APPROVED BY ENGINEERING. PLEASE CALL PLANNER IF ANY CHANGES ARE NECESSARY. CONSTRUCTION TO LOCATE AND VERIFY ALL UTILITIES PRIOR TO CONSTRUCTION.

NOTE TO CONTRACTOR:
IT IS ESSENTIAL THAT AN INSPECTION OF THE DUCTLINE BE MADE BY A CPS INSPECTOR PRIOR TO AND AFTER THE POURING OF CONCRETE. CALL 353-6850 TO ARRANGE FOR THE INSPECTION. TWENTY-FOUR HOURS ADVANCE NOTICE IS REQUIRED. WHEN CALLING FOR AN INSPECTION BE PREPARED TO REFERENCE JOB NUMBER AND ADDRESS SHOWN ON THIS COPY. CALL BETWEEN 8:00 A.M. AND 4:00 P.M. MONDAY - FRIDAY.

DUCTBANK LEGEND
"A"-3-4"
"B"-3-4" (1-4/0 NEUTRAL)
"C"-3-4" & 1-2" (1-4/0 NEUTRAL)
"D"-6-4" & 1-2" (1-4/0 NEUTRAL)
"E"-9-4" & 2-2" (2-4/0 NEUTRALS)
"F"-12-4" & 3-2" (2-4/0 NEUTRALS)
"G"-12-4" & 1-2"(3-4/0 NEUTRALS)

SEE TYPICAL DUCTLINE DETAILS ON SHT. 2 OF 2

NOTES:
1. THE CONTRACTOR SHALL BE RESPONSIBLE FOR COORDINATING LOCATIONS OF ALL EXISTING AND PROPOSED UTILITIES PRIOR TO EXCAVATING. ALL SUBSURFACE UTILITIES AND DRAINAGE FEATURES SHOWN ARE BASED ON INFORMATION PROVIDED ON CROSS SECTIONS DEVELOPED FOR THE ROADWAY PLANS.

STATE OF TEXAS
Garland C. Galm
66781
REGISTERED PROFESSIONAL ENGINEER

GARLAND C. GALM, P.E.
11/30/2007

NO.	REVISION	BY	DATE

WORK REQUEST NO.	WORK REQUEST TITLE / ADDRESS
3835821	BLANCO RD. CONVERSION

CPS ENERGY
P.O. BOX 1771
SAN ANTONIO, TX 78296

CEC
CIVIL ENGINEERING CONSULTANTS
SAN ANTONIO, TEXAS

BEXAR COUNTY
PUBLIC WORKS DIVISION

F.M. 2696 (BLANCO ROAD)
DUCTBANK
PLAN AND PROFILE
STA 101+89.44 TO STA 107+31.63

Planned: H.Snoga	Phone: 210-353-3764		SHEET 2 OF 9
Designed: JR	STATE	BEXAR COUNTY FILE NUMBER	PLAN SET NO. 554
Checked: GG	TEXAS		
Drawn: PW	COUNTY		OF 872
Checked: JR	BEXAR		

x:\data\cdot\projects\CPS_Blanco\UTILITY\Ductbank\PP02.dgn
3:44:49 PM
11/30/2007

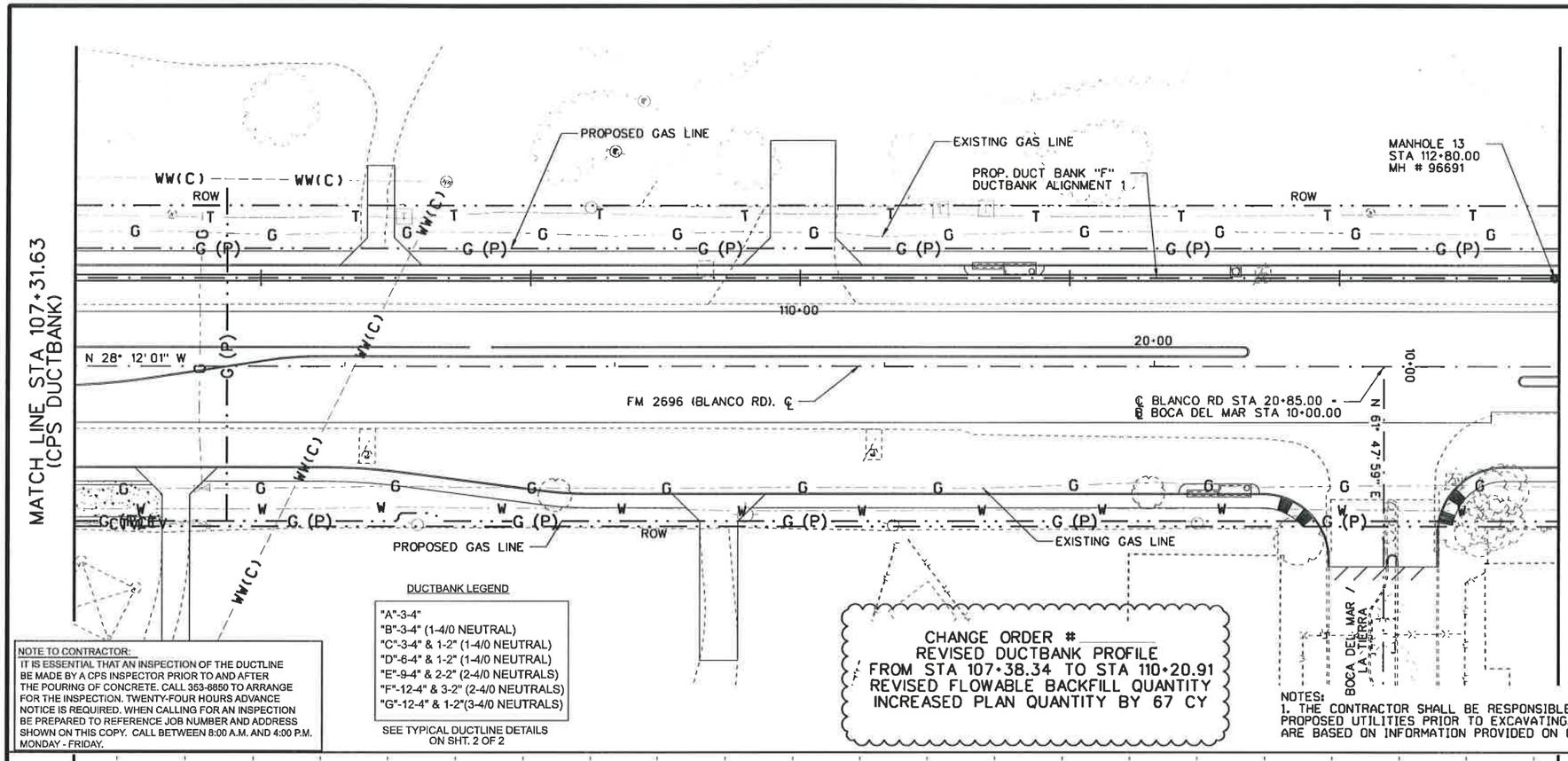

25 12.5 0 25 50
HORIZ. SCALE FEET

5 2.5 0 5 10
VERT. SCALE FEET

LEGEND

OE	OVERHEAD ELECTRIC LINE
CVT	CABLE TV LINE
W	WATER LINE
E	UNDERGROUND ELECTRIC LINE
T	UNDERGROUND TELEPHONE LINE
G	EXISTING GAS LINE
G (P)	PROPOSED GAS LINE
S.S	SANITARY SEWER LINE
WW(C)	WASTE WATER CLAY PIPE
FOC	FIBER OPTIC CABLE
TS	TRAFFIC SIGNALS
●	PROP. MANHOLE
	PROP. DUCT BANK

IMPORTANT
EXCAVATION SAFETY PLAN AND PROCEDURES

CITY PUBLIC SERVICE (CPS) CONSTRUCTION PERSONNEL OR CPS' CONTRACTOR (IN THE CASE OF CONTRACTED PROJECTS) SHALL REVIEW THESE PLANS, SKETCHES, SPECIFICATIONS AND ANTICIPATED EXCAVATION SITES WITHIN THE PROJECT WORK AREA IN ORDER TO IDENTIFY EXCAVATIONS THAT WILL REQUIRE AN EXCAVATION SAFETY PLAN AND PROCEDURE. THE EXCAVATION SAFETY PLAN AND PROCEDURES SHALL MEET OR EXCEED ALL REQUIREMENTS AS IDENTIFIED IN THE OCCUPATIONAL SAFETY AND HEALTH ADMINISTRATION'S (OSHA) STANDARD 29 CFR PART 1926 SUBPART P-EXCAVATIONS (7-1-94 EDITION). SPECIFICALLY, THE RESPONSIBLE PARTY SHALL DEVELOP AND IMPLEMENT AN EXCAVATION SAFETY PROGRAM IN ACCORDANCE WITH OSHA'S STANDARDS GOVERNING THE PRESENCE AND ACTIVITES OF INDIVIDUALS WORKING IN AND AROUND ANY EXCAVATION.

CONSTRUCTION NOTES

ALL FIELD CHANGES MUST BE APPROVED BY ENGINEERING. PLEASE CALL PLANNER IF ANY CHANGES ARE NECESSARY. CONSTRUCTION TO LOCATE AND VERIFY ALL UTILITIES PRIOR TO CONSTRUCTION.

NOTE TO CONTRACTOR:

IT IS ESSENTIAL THAT AN INSPECTION OF THE DUCTLINE BE MADE BY A CPS INSPECTOR PRIOR TO AND AFTER THE POURING OF CONCRETE. CALL 353-6850 TO ARRANGE FOR THE INSPECTION. TWENTY-FOUR HOURS ADVANCE NOTICE IS REQUIRED. WHEN CALLING FOR AN INSPECTION BE PREPARED TO REFERENCE JOB NUMBER AND ADDRESS SHOWN ON THIS COPY. CALL BETWEEN 8:00 A.M. AND 4:00 P.M. MONDAY - FRIDAY.

DUCTBANK LEGEND

"A"-3-4"
"B"-3-4" (1-4/0 NEUTRAL)
"C"-3-4" & 1-2" (1-4/0 NEUTRAL)
"D"-6-4" & 1-2" (1-4/0 NEUTRAL)
"E"-9-4" & 2-2" (2-4/0 NEUTRALS)
"F"-12-4" & 3-2" (2-4/0 NEUTRALS)
"G"-12-4" & 1-2"(3-4/0 NEUTRALS)

SEE TYPICAL DUCTLINE DETAILS ON SHT. 2 OF 2

CHANGE ORDER #_____
REVISED DUCTBANK PROFILE
FROM STA 107+38.34 TO STA 110+20.91
REVISED FLOWABLE BACKFILL QUANTITY
INCREASED PLAN QUANTITY BY 67 CY

NOTES:
1. THE CONTRACTOR SHALL BE RESPONSIBLE FOR COORDINATING LOCATIONS OF ALL EXISTING AND PROPOSED UTILITIES PRIOR TO EXCAVATING. ALL SUBSURFACE UTILITIES AND DRAINAGE FEATURES SHOWN ARE BASED ON INFORMATION PROVIDED ON CROSS SECTIONS DEVELOPED FOR THE ROADWAY PLANS.

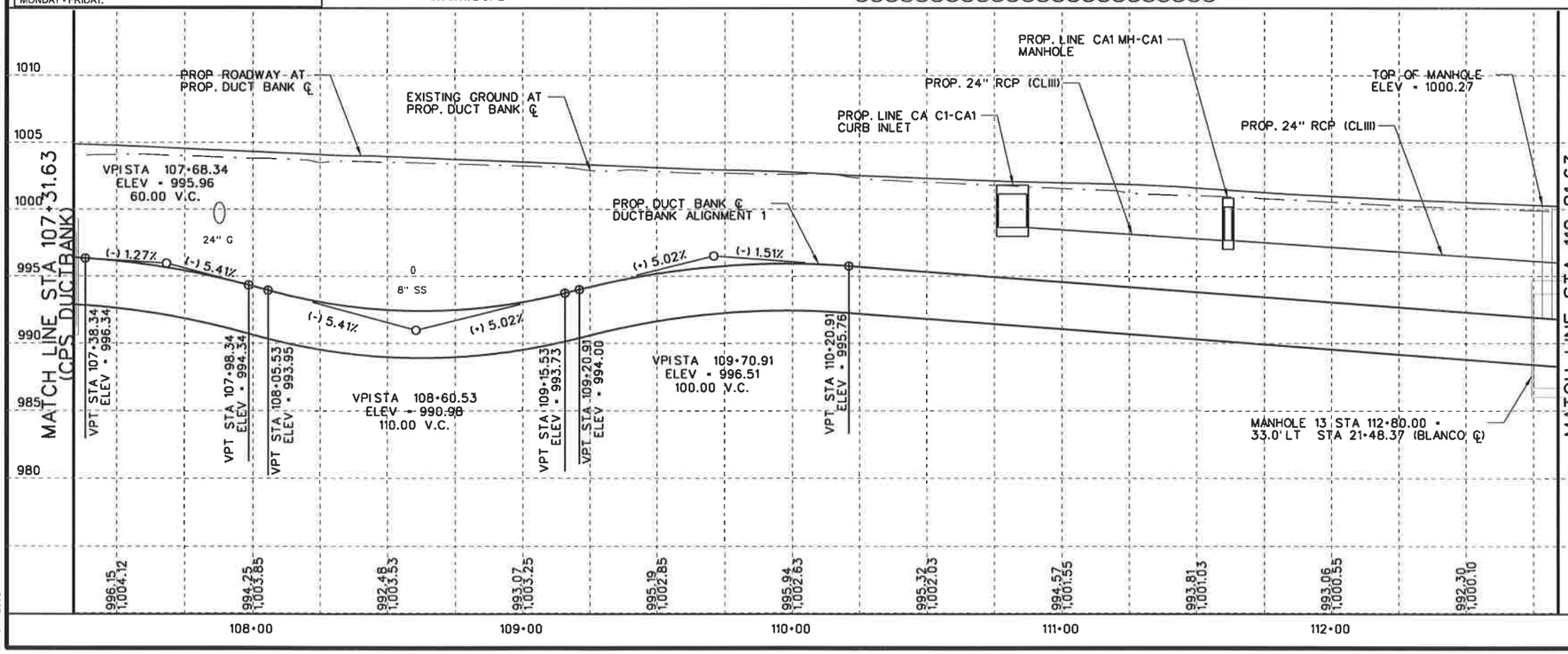

STATE OF TEXAS
Garland C. Galm
66781
REGISTERED PROFESSIONAL ENGINEER

GARLAND C. GALM, P.E.
10/1/2008

NO.	REVISION	BY	DATE

WORK REQUEST NO.	WORK REQUEST TITLE / ADDRESS
3835821	BLANCO RD. CONVERSION

CPS ENERGY
P.O. BOX 1771
SAN ANTONIO, TX 78296

CEC
CIVIL ENGINEERING CONSULTANTS
SAN ANTONIO, TEXAS

BEXAR COUNTY
PUBLIC WORKS DIVISION

F.M. 2696 (BLANCO ROAD)
DUCTBANK PLAN AND PROFILE
STA 107+31.63 TO STA 112+81.63

Planned: H.Snoga	Phone: 210-353-3764		SHEET 3 OF 9
Designed: JR	STATE	BEXAR COUNTY FILE NUMBER	PLAN SET NO.
Checked: GG	TEXAS		555
Drawn: PW	COUNTY		OF
Checked: JR	BEXAR		842

X:\data\txdot\projects\CPS_Blanco\UTILITY\change order sept 08\Ductbank\P03_COsept08.dgn
10:35:57 AM
10/1/2008

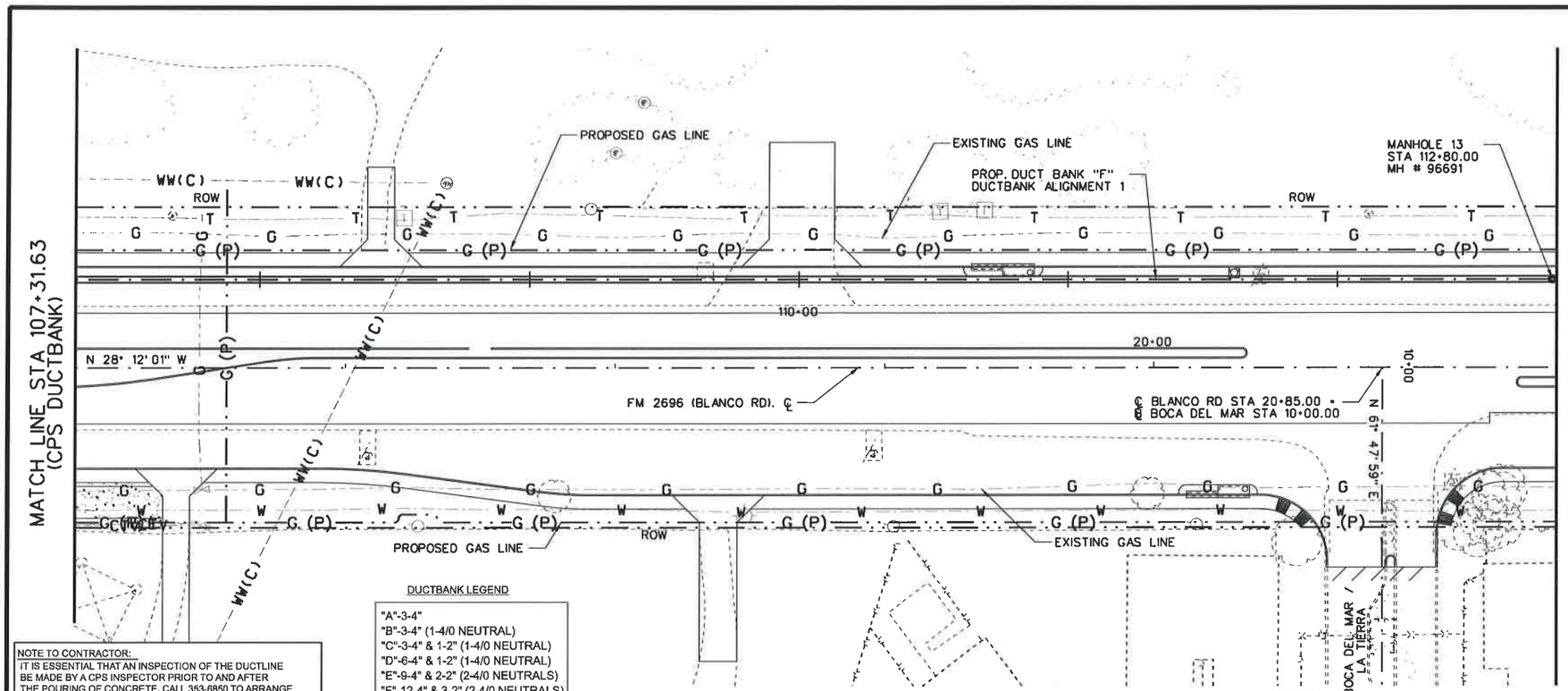

25 12.5 0 25 50
HORIZ. SCALE FEET

5 2.5 0 5 10
VERT. SCALE FEET

LEGEND

OE	OVERHEAD ELECTRIC LINE
CVT	CABLE TV LINE
W	WATER LINE
E	UNDERGROUND ELECTRIC LINE
T	UNDERGROUND TELEPHONE LINE
G	EXISTING GAS LINE
G (P)	PROPOSED GAS LINE
S.S	SANITARY SEWER LINE
WW(C)	WASTE WATER CLAY PIPE
FOC	FIBER OPTIC CABLE
TS	TRAFFIC SIGNALS
●	PROP. MANHOLE
	PROP. DUCT BANK

IMPORTANT
EXCAVATION SAFETY PLAN AND PROCEDURES

CITY PUBLIC SERVICE (CPS) CONSTRUCTION PERSONNEL OR CPS' CONTRACTOR (IN THE CASE OF CONTRACTED PROJECTS) SHALL REVIEW THESE PLANS, SKETCHES, SPECIFICATIONS AND ANTICIPATED EXCAVATION SITES WITHIN THE PROJECT WORK AREA IN ORDER TO IDENTIFY EXCAVATIONS THAT WILL REQUIRE AN EXCAVATION SAFETY PLAN AND PROCEDURE. THE EXCAVATION SAFETY PLAN AND PROCEDURES SHALL MEET OR EXCEED ALL REQUIREMENTS AS IDENTIFIED IN THE OCCUPATIONAL SAFETY AND HEALTH ADMINISTRATION'S (OSHA) STANDARD 29 CFR PART 1926 SUBPART P-EXCAVATIONS (7-1-94 EDITION). SPECIFICALLY, THE RESPONSIBLE PARTY SHALL DEVELOP AND IMPLEMENT AN EXCAVATION SAFETY PROGRAM IN ACCORDANCE WITH OSHA'S STANDARDS GOVERNING THE PRESENCE AND ACTIVITES OF INDIVIDUALS WORKING IN AND AROUND ANY EXCAVATION.

CONSTRUCTION NOTES

ALL FIELD CHANGES MUST BE APPROVED BY ENGINEERING. PLEASE CALL PLANNER IF ANY CHANGES ARE NECESSARY. CONSTRUCTION TO LOCATE AND VERIFY ALL UTILITIES PRIOR TO CONSTRUCTION.

NOTE TO CONTRACTOR:
IT IS ESSENTIAL THAT AN INSPECTION OF THE DUCTLINE BE MADE BY A CPS INSPECTOR PRIOR TO AND AFTER THE POURING OF CONCRETE. CALL 353-6850 TO ARRANGE FOR THE INSPECTION. TWENTY-FOUR HOURS ADVANCE NOTICE IS REQUIRED. WHEN CALLING FOR AN INSPECTION BE PREPARED TO REFERENCE JOB NUMBER AND ADDRESS SHOWN ON THIS COPY. CALL BETWEEN 8:00 A.M. AND 4:00 P.M. MONDAY - FRIDAY.

DUCTBANK LEGEND

"A"-3-4"
"B"-3-4" (1-4/0 NEUTRAL)
"C"-3-4" & 1-2" (1-4/0 NEUTRAL)
"D"-6-4" & 1-2" (1-4/0 NEUTRAL)
"E"-9-4" & 2-2" (2-4/0 NEUTRALS)
"F"-12-4" & 3-2" (2-4/0 NEUTRALS)
"G"-12-4" & 1-2"(3-4/0 NEUTRALS)

SEE TYPICAL DUCTLINE DETAILS ON SHT. 2 OF 2

NOTES:
1. THE CONTRACTOR SHALL BE RESPONSIBLE FOR COORDINATING LOCATIONS OF ALL EXISTING AND PROPOSED UTILITIES PRIOR TO EXCAVATING. ALL SUBSURFACE UTILITIES AND DRAINAGE FEATURES SHOWN ARE BASED ON INFORMATION PROVIDED ON CROSS SECTIONS DEVELOPED FOR THE ROADWAY PLANS.

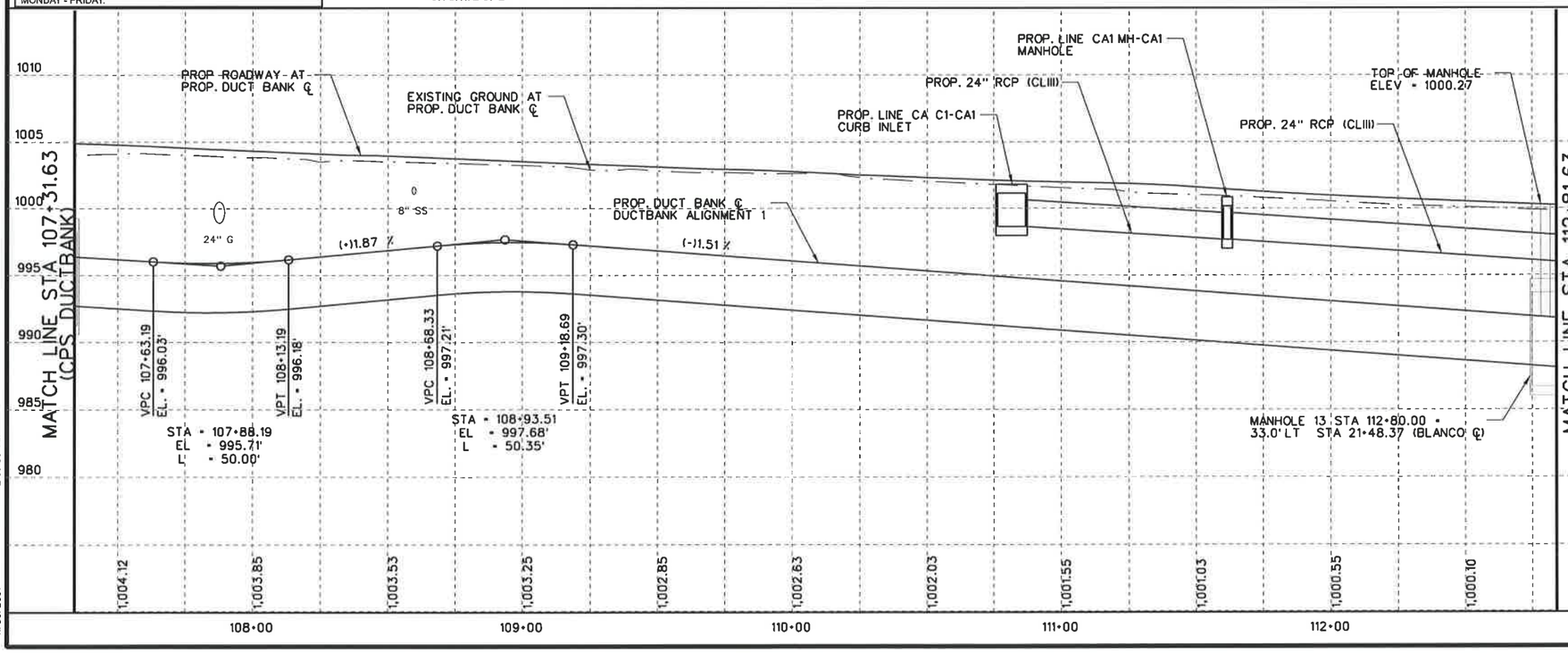

STATE OF TEXAS
Garland C. Galm
66781
REGISTERED PROFESSIONAL ENGINEER

GARLAND C. GALM, P.E.
11/30/2007

NO.	REVISION	BY	DATE

WORK REQUEST NO.	WORK REQUEST TITLE / ADDRESS
3835821	BLANCO RD. CONVERSION

CPS ENERGY
P.O. BOX 1771
SAN ANTONIO, TX 78296

CEC
CIVIL ENGINEERING CONSULTANTS
SAN ANTONIO, TEXAS

BEXAR COUNTY
PUBLIC WORKS DIVISION

F.M. 2696 (BLANCO ROAD)
DUCTBANK PLAN AND PROFILE
STA 107+31.63 TO STA 112+81.63

Planned: H.Snogo	Phone: 210-353-3764		SHEET 3 OF 9
Designed: JR	STATE	BEXAR COUNTY FILE NUMBER	PLAN SET NO.
Checked: GG	TEXAS		555
Drawn: PW	COUNTY		OF
Checked: JR	BEXAR		842

x:\data\txdot\projects\Ecps_blanco\UTILITY\Ductbank\PP03.dgn
11/30/2007 2:39:36 PM

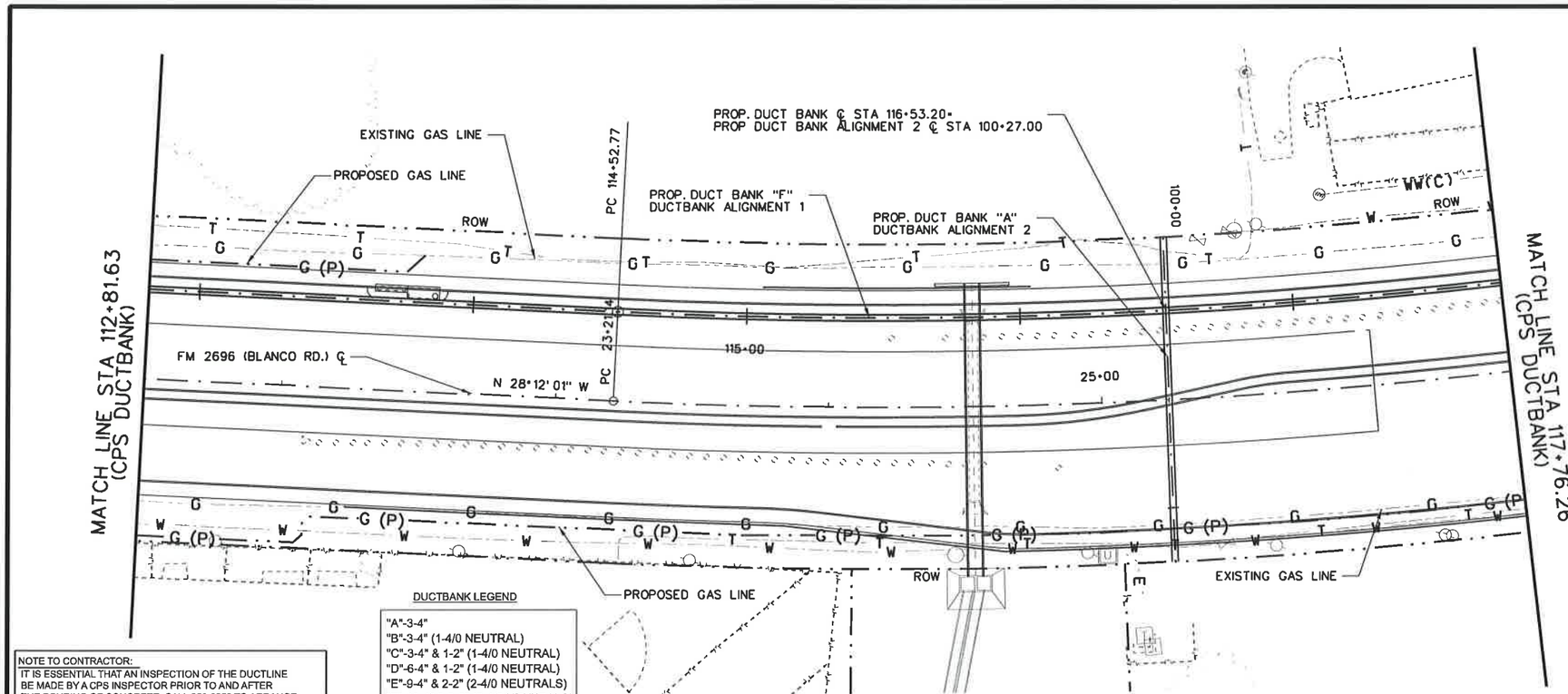

25 12.5 0 25 50
HORIZ. SCALE FEET

5 2.5 0 5 10
VERT. SCALE FEET

LEGEND

—— OE ——	OVERHEAD ELECTRIC LINE
—— CVT ——	CABLE TV LINE
—— W ——	WATER LINE
— — E — —	UNDERGROUND ELECTRIC LINE
— — T — —	UNDERGROUND TELEPHONE LINE
— — G — —	EXISTING GAS LINE
— — G (P) — —	PROPOSED GAS LINE
— — S.S — —	SANITARY SEWER LINE
— — WW(C) — —	WASTE WATER CLAY PIPE
— — FOC — —	FIBER OPTIC CABLE
— — TS — —	TRAFFIC SIGNALS
●	PROP. MANHOLE
═══	PROP. DUCT BANK

IMPORTANT
EXCAVATION SAFETY PLAN AND PROCEDURES

CITY PUBLIC SERVICE (CPS) CONSTRUCTION PERSONNEL OR CPS' CONTRACTOR (IN THE CASE OF CONTRACTED PROJECTS) SHALL REVIEW THESE PLANS, SKETCHES, SPECIFICATIONS AND ANTICIPATED EXCAVATION SITES WITHIN THE PROJECT WORK AREA IN ORDER TO IDENTIFY EXCAVATIONS THAT WILL REQUIRE AN EXCAVATION SAFETY PLAN AND PROCEDURE. THE EXCAVATION SAFETY PLAN AND PROCEDURES SHALL MEET OR EXCEED ALL REQUIREMENTS AS IDENTIFIED IN THE OCCUPATIONAL SAFETY AND HEALTH ADMINISTRATION'S (OSHA) STANDARD 29 CFR PART 1926 SUBPART P-EXCAVATIONS (7-1-94 EDITION). SPECIFICALLY, THE RESPONSIBLE PARTY SHALL DEVELOP AND IMPLEMENT AN EXCAVATION SAFETY PROGRAM IN ACCORDANCE WITH OSHA'S STANDARDS GOVERNING THE PRESENCE AND ACTIVITES OF INDIVIDUALS WORKING IN AND AROUND ANY EXCAVATION.

CONSTRUCTION NOTES
ALL FIELD CHANGES MUST BE APPROVED BY ENGINEERING. PLEASE CALL PLANNER IF ANY CHANGES ARE NECESSARY. CONSTRUCTION TO LOCATE AND VERIFY ALL UTILITIES PRIOR TO CONSTRUCTION.

NOTE TO CONTRACTOR:
IT IS ESSENTIAL THAT AN INSPECTION OF THE DUCTLINE BE MADE BY A CPS INSPECTOR PRIOR TO AND AFTER THE POURING OF CONCRETE. CALL 353-6850 TO ARRANGE FOR THE INSPECTION. TWENTY-FOUR HOURS ADVANCE NOTICE IS REQUIRED. WHEN CALLING FOR AN INSPECTION BE PREPARED TO REFERENCE JOB NUMBER AND ADDRESS SHOWN ON THIS COPY. CALL BETWEEN 8:00 A.M. AND 4:00 P.M. MONDAY - FRIDAY.

DUCTBANK LEGEND
"A"-3-4"
"B"-3-4" (1-4/0 NEUTRAL)
"C"-3-4" & 1-2" (1-4/0 NEUTRAL)
"D"-6-4" & 1-2" (1-4/0 NEUTRAL)
"E"-9-4" & 2-2" (2-4/0 NEUTRALS)
"F"-12-4" & 3-2" (2-4/0 NEUTRALS)
"G"-12-4" & 1-2"(3-4/0 NEUTRALS)

SEE TYPICAL DUCTLINE DETAILS ON SHT. 2 OF 2

NOTES:
1. THE CONTRACTOR SHALL BE RESPONSIBLE FOR COORDINATING LOCATIONS OF ALL EXISTING AND PROPOSED UTILITIES PRIOR TO EXCAVATING. ALL SUBSURFACE UTILITIES AND DRAINAGE FEATURES SHOWN ARE BASED ON INFORMATION PROVIDED ON CROSS SECTIONS DEVELOPED FOR THE ROADWAY PLANS.

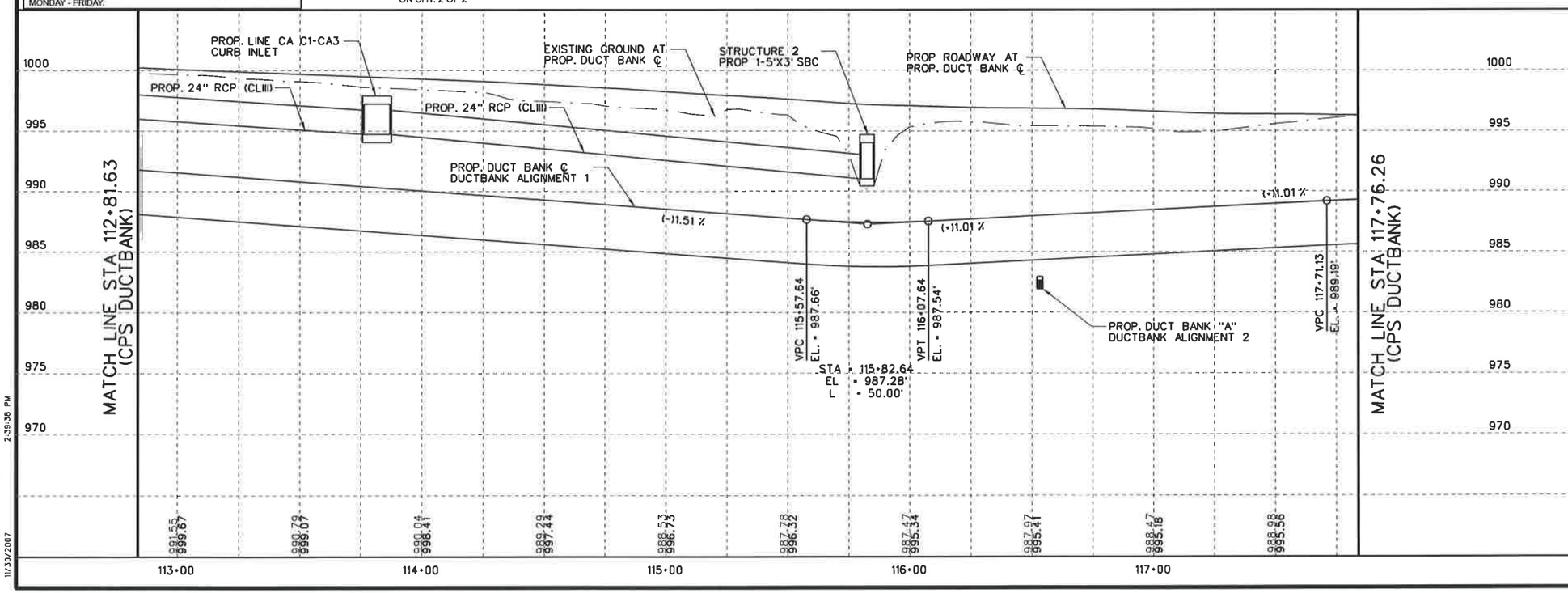

STATE OF TEXAS
Garland C. Galm
66781
REGISTERED PROFESSIONAL ENGINEER

GARLAND C. GALM, P.E.
11/30/2007

NO.	REVISION	BY	DATE

WORK REQUEST NO.	WORK REQUEST TITLE / ADDRESS
3835821	BLANCO RD. CONVERSION

CPS ENERGY
P.O. BOX 1771
SAN ANTONIO, TX 78296

CEC
CIVIL ENGINEERING CONSULTANTS
SAN ANTONIO, TEXAS

BEXAR COUNTY
PUBLIC WORKS DIVISION

F.M. 2696 (BLANCO ROAD)
DUCTBANK PLAN AND PROFILE
STA 112+81.63 TO STA 117+76.26

Planned: H.Snoga	Phone: 210-353-3764		SHEET 4 OF 9
Designed: JR	STATE	BEXAR COUNTY FILE NUMBER	PLAN SET NO.
Checked: GG	TEXAS		556
Drawn: PW	COUNTY		OF
Checked: JR	BEXAR		842

x:\data\txdot\projects\Ecps_blanco\UTILITY\DuctbankPP04.dgn
11/30/2007 2:39:38 PM

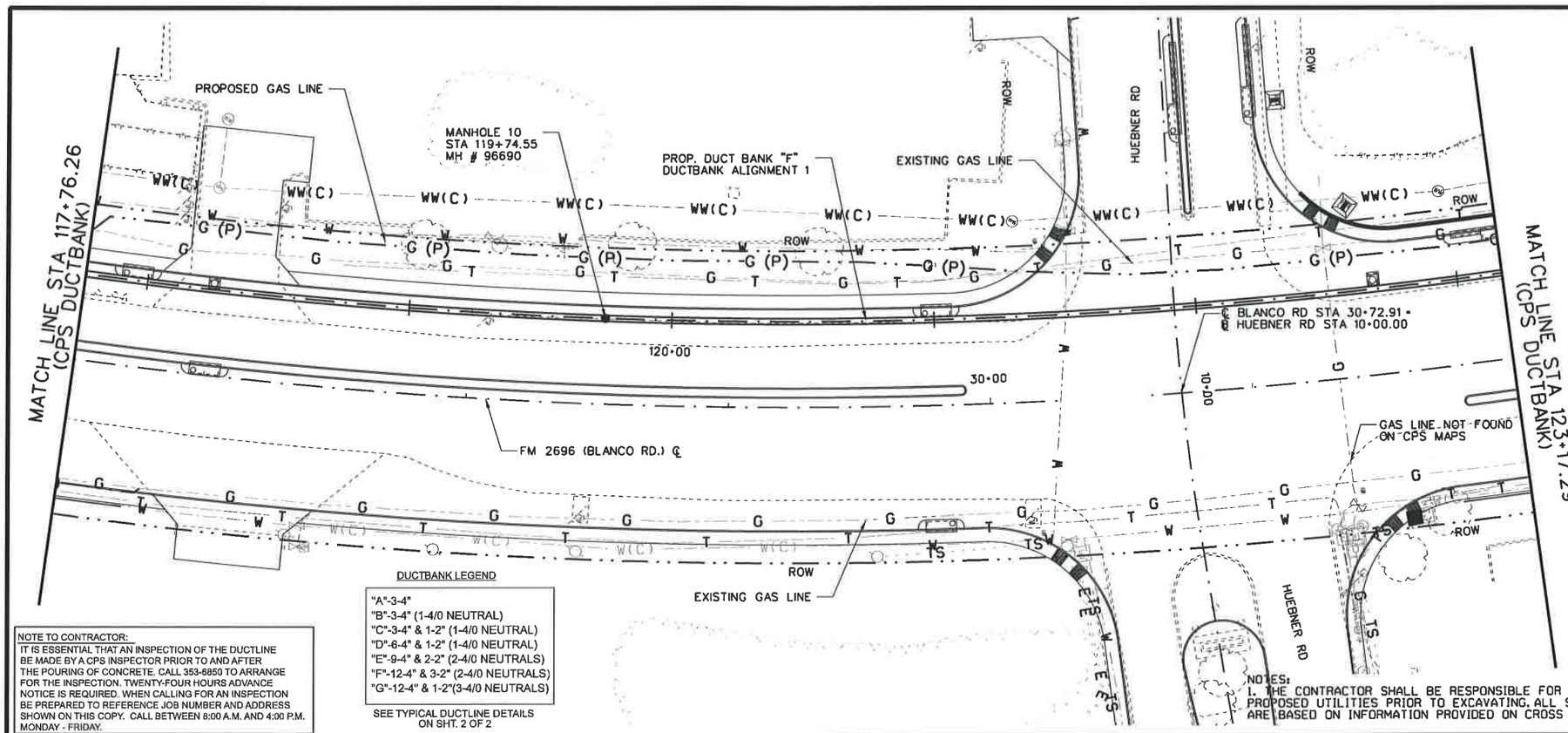

25 12.5 0 25 50
HORIZ. SCALE FEET

5 2.5 0 5 10
VERT. SCALE FEET

LEGEND

OE	OVERHEAD ELECTRIC LINE
CVT	CABLE TV LINE
W	WATER LINE
E	UNDERGROUND ELECTRIC LINE
T	UNDERGROUND TELEPHONE LINE
G	EXISTING GAS LINE
G (P)	PROPOSED GAS LINE
S.S	SANITARY SEWER LINE
WW(C)	WASTE WATER CLAY PIPE
FOC	FIBER OPTIC CABLE
TS	TRAFFIC SIGNALS
●	PROP. MANHOLE
	PROP. DUCT BANK

IMPORTANT
EXCAVATION SAFETY PLAN AND PROCEDURES

CITY PUBLIC SERVICE (CPS) CONSTRUCTION PERSONNEL OR CPS' CONTRACTOR (IN THE CASE OF CONTRACTED PROJECTS) SHALL REVIEW THESE PLANS, SKETCHES, SPECIFICATIONS AND ANTICIPATED EXCAVATION SITES WITHIN THE PROJECT WORK AREA IN ORDER TO IDENTIFY EXCAVATIONS THAT WILL REQUIRE AN EXCAVATION SAFETY PLAN AND PROCEDURE. THE EXCAVATION SAFETY PLAN AND PROCEDURES SHALL MEET OR EXCEED ALL REQUIREMENTS AS IDENTIFIED IN THE OCCUPATIONAL SAFETY AND HEALTH ADMINISTRATION'S (OSHA) STANDARD 29 CFR PART 1926 SUBPART P-EXCAVATIONS (7-1-94 EDITION). SPECIFICALLY, THE RESPONSIBLE PARTY SHALL DEVELOP AND IMPLEMENT AN EXCAVATION SAFETY PROGRAM IN ACCORDANCE WITH OSHA'S STANDARDS GOVERNING THE PRESENCE AND ACTIVITES OF INDIVIDUALS WORKING IN AND AROUND ANY EXCAVATION.

CONSTRUCTION NOTES

ALL FIELD CHANGES MUST BE APPROVED BY ENGINEERING. PLEASE CALL PLANNER IF ANY CHANGES ARE NECESSARY. CONSTRUCTION TO LOCATE AND VERIFY ALL UTILITIES PRIOR TO CONSTRUCTION.

NOTE TO CONTRACTOR:
IT IS ESSENTIAL THAT AN INSPECTION OF THE DUCTLINE BE MADE BY A CPS INSPECTOR PRIOR TO AND AFTER THE POURING OF CONCRETE. CALL 353-6850 TO ARRANGE FOR THE INSPECTION. TWENTY-FOUR HOURS ADVANCE NOTICE IS REQUIRED. WHEN CALLING FOR AN INSPECTION BE PREPARED TO REFERENCE JOB NUMBER AND ADDRESS SHOWN ON THIS COPY. CALL BETWEEN 8:00 A.M. AND 4:00 P.M. MONDAY - FRIDAY.

DUCTBANK LEGEND

"A"-3-4"
"B"-3-4" (1-4/0 NEUTRAL)
"C"-3-4" & 1-2" (1-4/0 NEUTRAL)
"D"-6-4" & 1-2" (1-4/0 NEUTRAL)
"E"-9-4" & 2-2" (2-4/0 NEUTRALS)
"F"-12-4" & 3-2" (2-4/0 NEUTRALS)
"G"-12-4" & 1-2"(3-4/0 NEUTRALS)

SEE TYPICAL DUCTLINE DETAILS ON SHT. 2 OF 2

NOTES:
1. THE CONTRACTOR SHALL BE RESPONSIBLE FOR COORDINATING LOCATIONS OF ALL EXISTING AND PROPOSED UTILITIES PRIOR TO EXCAVATING. ALL SUBSURFACE UTILITIES AND DRAINAGE FEATURES SHOWN ARE BASED ON INFORMATION PROVIDED ON CROSS SECTIONS DEVELOPED FOR THE ROADWAY PLANS.

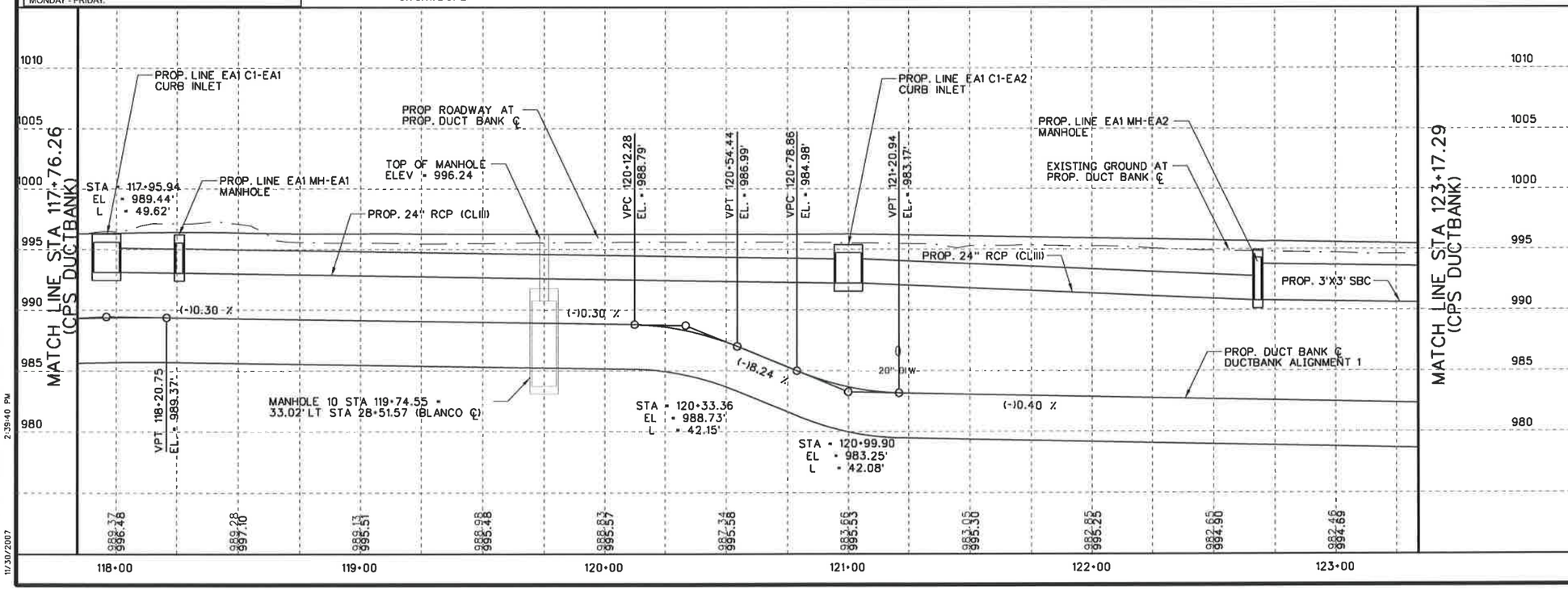

STATE OF TEXAS
Garland C. Galm
66781
REGISTERED PROFESSIONAL ENGINEER

GARLAND C. GALM, P.E.
11/30/2007

NO.	REVISION	BY	DATE

WORK REQUEST NO.	WORK REQUEST TITLE / ADDRESS
3835821	BLANCO RD. CONVERSION

CPS ENERGY
P.O. BOX 1771
SAN ANTONIO, TX 78296

CEC
CIVIL ENGINEERING CONSULTANTS
SAN ANTONIO, TEXAS

BEXAR COUNTY
PUBLIC WORKS DIVISION

F.M. 2696 (BLANCO ROAD)
DUCTBANK
PLAN AND PROFILE
STA 117+76.26 TO STA 123+17.29

Planned: H.Snoga	Phone: 210-353-3764	SHEET 5 OF 9	
Designed: JR	STATE	BEXAR COUNTY FILE NUMBER	PLAN SET NO.
Checked: GG	TEXAS		557
Drawn: PW	COUNTY		OF
Checked: JR	BEXAR		842

x:\data\txdot\projects\Cps_blanco\UTILITY\Ductbank\PP05.dgn
11/30/2007 2:39:40 PM

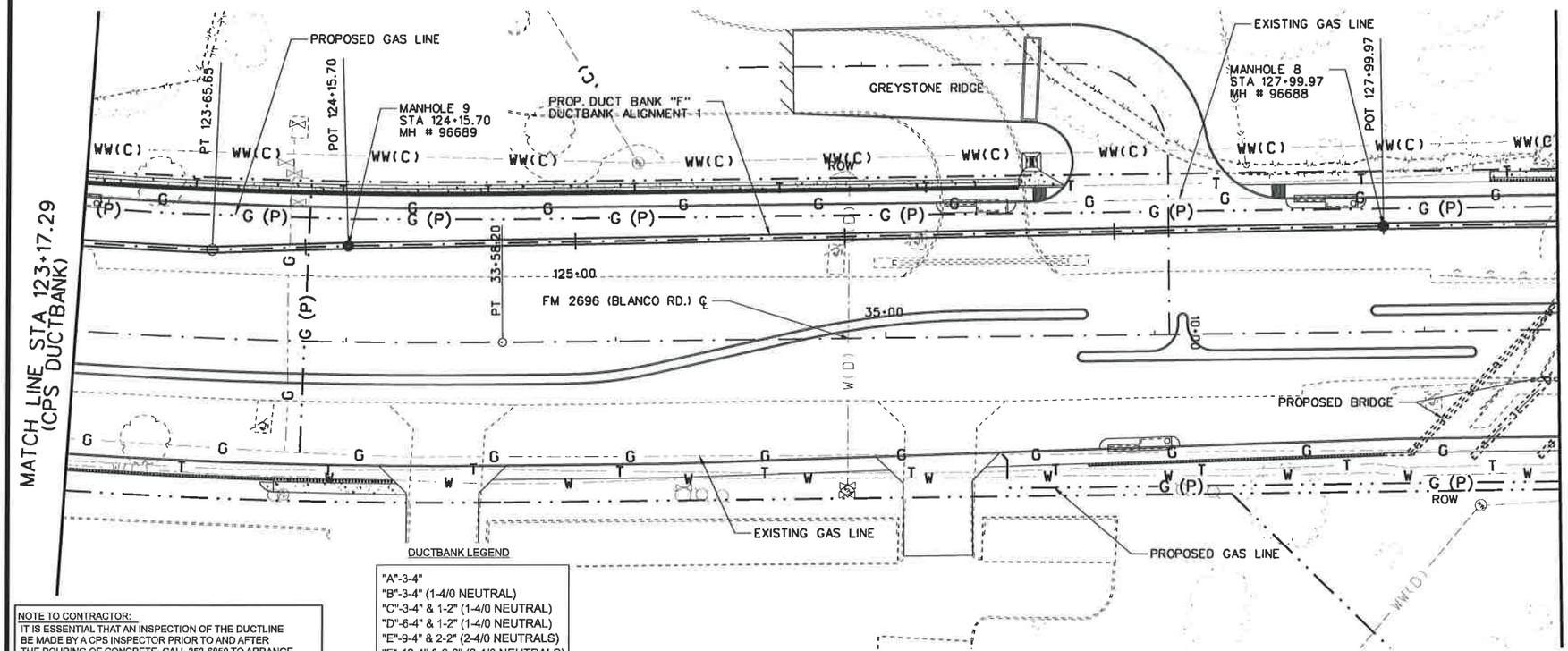

DUCTBANK LEGEND

"A"-3-4"
"B"-3-4" (1-4/0 NEUTRAL)
"C"-3-4" & 1-2" (1-4/0 NEUTRAL)
"D"-6-4" & 1-2" (1-4/0 NEUTRAL)
"E"-9-4" & 2-2" (2-4/0 NEUTRALS)
"F"-12-4" & 3-2" (2-4/0 NEUTRALS)
"G"-12-4" & 1-2"(3-4/0 NEUTRALS)

SEE TYPICAL DUCTLINE DETAILS ON SHT. 2 OF 2

NOTE TO CONTRACTOR:
IT IS ESSENTIAL THAT AN INSPECTION OF THE DUCTLINE BE MADE BY A CPS INSPECTOR PRIOR TO AND AFTER THE POURING OF CONCRETE. CALL 353-6850 TO ARRANGE FOR THE INSPECTION. TWENTY-FOUR HOURS ADVANCE NOTICE IS REQUIRED. WHEN CALLING FOR AN INSPECTION BE PREPARED TO REFERENCE JOB NUMBER AND ADDRESS SHOWN ON THIS COPY. CALL BETWEEN 8:00 A.M. AND 4:00 P.M. MONDAY - FRIDAY.

25 12.5 0 25 50
HORIZ. SCALE FEET

5 2.5 0 5 10
VERT. SCALE FEET

LEGEND

OE	OVERHEAD ELECTRIC LINE
CVT	CABLE TV LINE
W	WATER LINE
E	UNDERGROUND ELECTRIC LINE
T	UNDERGROUND TELEPHONE LINE
G	EXISTING GAS LINE
G (P)	PROPOSED GAS LINE
S.S	SANITARY SEWER LINE
WW(C)	WASTE WATER CLAY PIPE
FOC	FIBER OPTIC CABLE
TS	TRAFFIC SIGNALS
●	PROP. MANHOLE
	PROP. DUCT BANK

IMPORTANT
EXCAVATION SAFETY PLAN AND PROCEDURES

CITY PUBLIC SERVICE (CPS) CONSTRUCTION PERSONNEL OR CPS' CONTRACTOR (IN THE CASE OF CONTRACTED PROJECTS) SHALL REVIEW THESE PLANS, SKETCHES, SPECIFICATIONS AND ANTICIPATED EXCAVATION SITES WITHIN THE PROJECT WORK AREA IN ORDER TO IDENTIFY EXCAVATIONS THAT WILL REQUIRE AN EXCAVATION SAFETY PLAN AND PROCEDURE. THE EXCAVATION SAFETY PLAN AND PROCEDURES SHALL MEET OR EXCEED ALL REQUIREMENTS AS IDENTIFIED IN THE OCCUPATIONAL SAFETY AND HEALTH ADMINISTRATION'S (OSHA) STANDARD 29 CFR PART 1926 SUBPART P-EXCAVATIONS (7-1-94 EDITION). SPECIFICALLY, THE RESPONSIBLE PARTY SHALL DEVELOP AND IMPLEMENT AN EXCAVATION SAFETY PROGRAM IN ACCORDANCE WITH OSHA'S STANDARDS GOVERNING THE PRESENCE AND ACTIVITES OF INDIVIDUALS WORKING IN AND AROUND ANY EXCAVATION.

CONSTRUCTION NOTES
ALL FIELD CHANGES MUST BE APPROVED BY ENGINEERING. PLEASE CALL PLANNER IF ANY CHANGES ARE NECESSARY. CONSTRUCTION TO LOCATE AND VERIFY ALL UTILITIES PRIOR TO CONSTRUCTION.

NOTES:
1. THE CONTRACTOR SHALL BE RESPONSIBLE FOR COORDINATING LOCATIONS OF ALL EXISTING AND PROPOSED UTILITIES PRIOR TO EXCAVATING. ALL SUBSURFACE UTILITIES AND DRAINAGE FEATURES SHOWN ARE BASED ON INFORMATION PROVIDED ON CROSS SECTIONS DEVELOPED FOR THE ROADWAY PLANS.

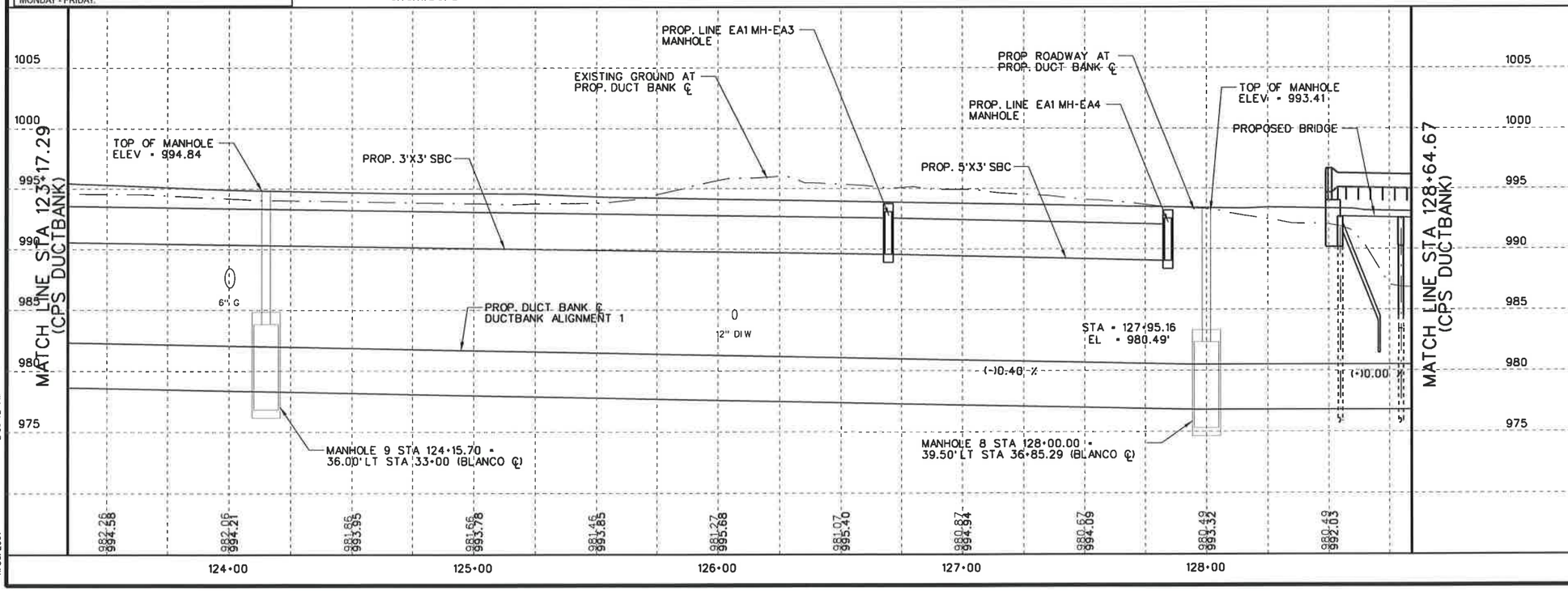

STATE OF TEXAS
Garland C. Galm
66761
REGISTERED PROFESSIONAL ENGINEER

GARLAND C. GALM, P.E.
11/30/2007

NO.	REVISION	BY	DATE

WORK REQUEST NO.	WORK REQUEST TITLE / ADDRESS
3835821	BLANCO RD. CONVERSION

CPS ENERGY
P.O. BOX 1771
SAN ANTONIO, TX 78296

CEC
CIVIL ENGINEERING CONSULTANTS
SAN ANTONIO, TEXAS

BEXAR COUNTY
PUBLIC WORKS DIVISION

F.M. 2696 (BLANCO ROAD)
DUCTBANK
PLAN AND PROFILE
STA 123+17.29 TO STA 128+64.71

Planned: H.Snoga	Phone: 210-353-3764		SHEET 6 OF 9
Designed: JR	STATE	BEXAR COUNTY FILE NUMBER	PLAN SET NO.
Checked: GG	TEXAS		558
Drawn: PW	COUNTY		OF
Checked: JR	BEXAR		842

x:\data\txdot\projects\Eps_blanco\UTILITY\DuctbankPP06.dgn
11/30/2007 2:39:42 PM

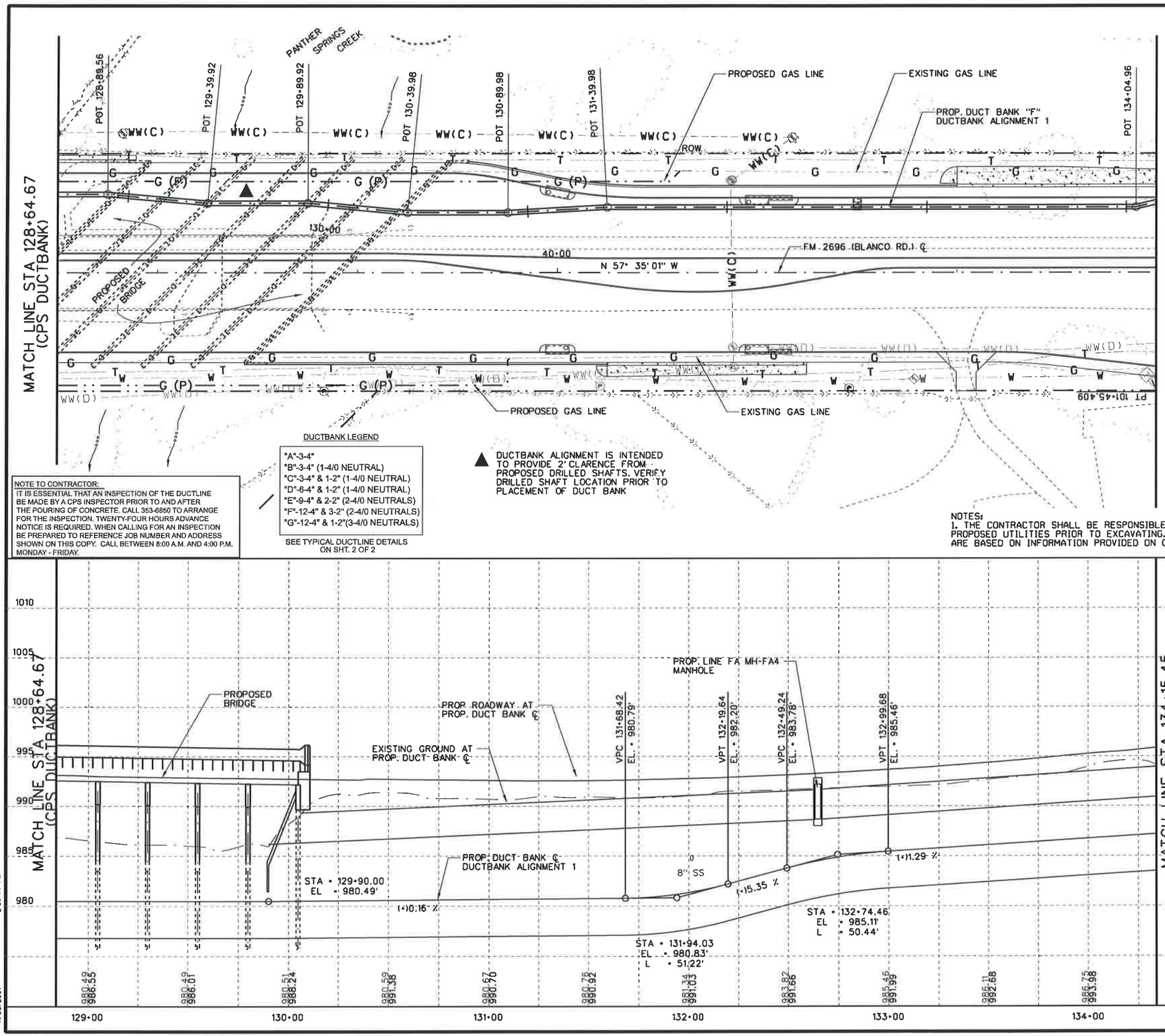

25 12.5 0 25 50
HORIZ. SCALE FEET

5 2.5 0 5 10
VERT. SCALE FEET

LEGEND

- OE — OVERHEAD ELECTRIC LINE
- CVT — CABLE TV LINE
- W — WATER LINE
- E — UNDERGROUND ELECTRIC LINE
- T — UNDERGROUND TELEPHONE LINE
- G — EXISTING GAS LINE
- G (P) — PROPOSED GAS LINE
- S.S — SANITARY SEWER LINE
- WW(C) — WASTE WATER CLAY PIPE
- FOC — FIBER OPTIC CABLE
- TS — TRAFFIC SIGNALS
- ● PROP. MANHOLE
- PROP. DUCT BANK

IMPORTANT
EXCAVATION SAFETY PLAN AND PROCEDURES

CITY PUBLIC SERVICE (CPS) CONSTRUCTION PERSONNEL OR CPS' CONTRACTOR (IN THE CASE OF CONTRACTED PROJECTS) SHALL REVIEW THESE PLANS, SKETCHES, SPECIFICATIONS AND ANTICIPATED EXCAVATION SITES WITHIN THE PROJECT WORK AREA IN ORDER TO IDENTIFY EXCAVATIONS THAT WILL REQUIRE AN EXCAVATION SAFETY PLAN AND PROCEDURE. THE EXCAVATION SAFETY PLAN AND PROCEDURES SHALL MEET OR EXCEED ALL REQUIREMENTS AS IDENTIFIED IN THE OCCUPATIONAL SAFETY AND HEALTH ADMINISTRATION'S (OSHA) STANDARD 29 CFR PART 1926 SUBPART P-EXCAVATIONS (7-1-94 EDITION). SPECIFICALLY, THE RESPONSIBLE PARTY SHALL DEVELOP AND IMPLEMENT AN EXCAVATION SAFETY PROGRAM IN ACCORDANCE WITH OSHA'S STANDARDS GOVERNING THE PRESENCE AND ACTIVITES OF INDIVIDUALS WORKING IN AND AROUND ANY EXCAVATION.

CONSTRUCTION NOTES

ALL FIELD CHANGES MUST BE APPROVED BY ENGINEERING. PLEASE CALL PLANNER IF ANY CHANGES ARE NECESSARY. CONSTRUCTION TO LOCATE AND VERIFY ALL UTILITIES PRIOR TO CONSTRUCTION.

NOTE TO CONTRACTOR:
IT IS ESSENTIAL THAT AN INSPECTION OF THE DUCTLINE BE MADE BY A CPS INSPECTOR PRIOR TO AND AFTER THE POURING OF CONCRETE. CALL 353-6850 TO ARRANGE FOR THE INSPECTION. TWENTY-FOUR HOURS ADVANCE NOTICE IS REQUIRED. WHEN CALLING FOR AN INSPECTION BE PREPARED TO REFERENCE JOB NUMBER AND ADDRESS SHOWN ON THIS COPY. CALL BETWEEN 8:00 A.M. AND 4:00 P.M. MONDAY - FRIDAY.

DUCTBANK LEGEND

"A"-3-4"
"B"-3-4" (1-4/0 NEUTRAL)
"C"-3-4" & 1-2" (1-4/0 NEUTRAL)
"D"-6-4" & 1-2" (1-4/0 NEUTRAL)
"E"-9-4" & 2-2" (2-4/0 NEUTRALS)
"F"-12-4" & 3-2" (2-4/0 NEUTRALS)
"G"-12-4" & 1-2"(3-4/0 NEUTRALS)

SEE TYPICAL DUCTLINE DETAILS ON SHT. 2 OF 2

▲ DUCTBANK ALIGNMENT IS INTENDED TO PROVIDE 2' CLARENCE FROM PROPOSED DRILLED SHAFTS. VERIFY DRILLED SHAFT LOCATION PRIOR TO PLACEMENT OF DUCT BANK

NOTES:
1. THE CONTRACTOR SHALL BE RESPONSIBLE FOR COORDINATING LOCATIONS OF ALL EXISTING AND PROPOSED UTILITIES PRIOR TO EXCAVATING. ALL SUBSURFACE UTILITIES AND DRAINAGE FEATURES SHOWN ARE BASED ON INFORMATION PROVIDED ON CROSS SECTIONS DEVELOPED FOR THE ROADWAY PLANS.

STATE OF TEXAS
Garland C. Galm
66781
REGISTERED PROFESSIONAL ENGINEER

GARLAND C. GALM, P.E.
11/30/2007

NO.	REVISION	BY	DATE

WORK REQUEST NO.	WORK REQUEST TITLE / ADDRESS
3835821	BLANCO RD. CONVERSION

CPS ENERGY
P.O. BOX 1771
SAN ANTONIO, TX 78296

CEC — CIVIL ENGINEERING CONSULTANTS, SAN ANTONIO, TEXAS

BEXAR COUNTY
PUBLIC WORKS DIVISION

F.M. 2696 (BLANCO ROAD)
DUCTBANK PLAN AND PROFILE
STA 128+64.71 TO STA 134+14.99

Planned: H.Snogo	Phone: 210-353-3764		SHEET 7 OF 9
Designed: JR	STATE	BEXAR COUNTY FILE NUMBER	PLAN SET NO. 591
Checked: GG	TEXAS		
Drawn: PW	COUNTY		OF
Checked: JR	BEXAR		842

x:\data\txdot\projects\Eccs_blanco\UTILITY\DuctbankPP07.dgn
11/30/2007 2:39:44 PM

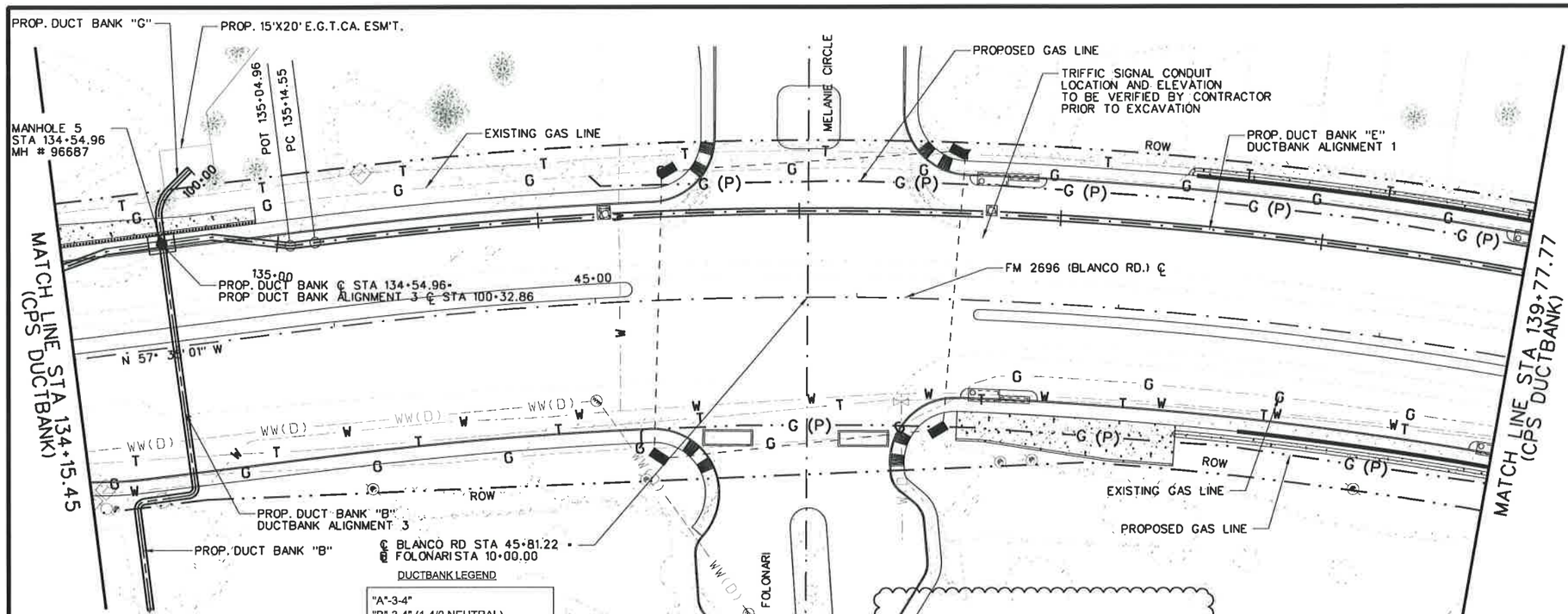

25 12.5 0 25 50
HORIZ. SCALE FEET

5 2.5 0 5 10
VERT. SCALE FEET

LEGEND

—— OE ——	OVERHEAD ELECTRIC LINE
—— CVT ——	CABLE TV LINE
—— W ——	WATER LINE
—— E ——	UNDERGROUND ELECTRIC LINE
—— T ——	UNDERGROUND TELEPHONE LINE
—— G ——	EXISTING GAS LINE
—— G (P) ——	PROPOSED GAS LINE
—— S.S ——	SANITARY SEWER LINE
—— WW(C) ——	WASTE WATER CLAY PIPE
—— FOC ——	FIBER OPTIC CABLE
—— TS ——	TRAFFIC SIGNALS
●	PROP. MANHOLE
═══	PROP. DUCT BANK

IMPORTANT
EXCAVATION SAFETY PLAN AND PROCEDURES

CITY PUBLIC SERVICE (CPS) CONSTRUCTION PERSONNEL OR CPS' CONTRACTOR (IN THE CASE OF CONTRACTED PROJECTS) SHALL REVIEW THESE PLANS, SKETCHES, SPECIFICATIONS AND ANTICIPATED EXCAVATION SITES WITHIN THE PROJECT WORK AREA IN ORDER TO IDENTIFY EXCAVATIONS THAT WILL REQUIRE AN EXCAVATION SAFETY PLAN AND PROCEDURE. THE EXCAVATION SAFETY PLAN AND PROCEDURES SHALL MEET OR EXCEED ALL REQUIREMENTS AS IDENTIFIED IN THE OCCUPATIONAL SAFETY AND HEALTH ADMINISTRATION'S (OSHA) STANDARD 29 CFR PART 1926 SUBPART P-EXCAVATIONS (7-1-94 EDITION). SPECIFICALLY, THE RESPONSIBLE PARTY SHALL DEVELOP AND IMPLEMENT AN EXCAVATION SAFETY PROGRAM IN ACCORDANCE WITH OSHA'S STANDARDS GOVERNING THE PRESENCE AND ACTIVITES OF INDIVIDUALS WORKING IN AND AROUND ANY EXCAVATION.

CONSTRUCTION NOTES
ALL FIELD CHANGES MUST BE APPROVED BY ENGINEERING. PLEASE CALL PLANNER IF ANY CHANGES ARE NECESSARY. CONSTRUCTION TO LOCATE AND VERIFY ALL UTILITIES PRIOR TO CONSTRUCTION.

NOTE TO CONTRACTOR:
IT IS ESSENTIAL THAT AN INSPECTION OF THE DUCTLINE BE MADE BY A CPS INSPECTOR PRIOR TO AND AFTER THE POURING OF CONCRETE. CALL 353-6850 TO ARRANGE FOR THE INSPECTION. TWENTY-FOUR HOURS ADVANCE NOTICE IS REQUIRED. WHEN CALLING FOR AN INSPECTION BE PREPARED TO REFERENCE JOB NUMBER AND ADDRESS SHOWN ON THIS COPY. CALL BETWEEN 8:00 A.M. AND 4:00 P.M. MONDAY - FRIDAY.

DUCTBANK LEGEND

"A"-3-4"
"B"-3-4" (1-4/0 NEUTRAL)
"C"-3-4" & 1-2" (1-4/0 NEUTRAL)
"D"-6-4" & 1-2" (1-4/0 NEUTRAL)
"E"-9-4" & 2-2" (2-4/0 NEUTRALS)
"F"-12-4" & 3-2" (2-4/0 NEUTRALS)
"G"-12-4" & 1-2"(3-4/0 NEUTRALS)

SEE TYPICAL DUCTLINE DETAILS ON SHT. 2 OF 2

CHANGE ORDER #
REVISED DUCTBANK ALIGNMENT 3
FROM STA 100+00 TO STA 100+23.76

NOTES:
1. THE CONTRACTOR SHALL BE RESPONSIBLE FOR COORDINATING LOCATIONS OF ALL EXISTING AND PROPOSED UTILITIES PRIOR TO EXCAVATING. ALL SUBSURFACE UTILITIES AND DRAINAGE FEATURES SHOWN ARE BASED ON INFORMATION PROVIDED ON CROSS SECTIONS DEVELOPED FOR THE ROADWAY PLANS.

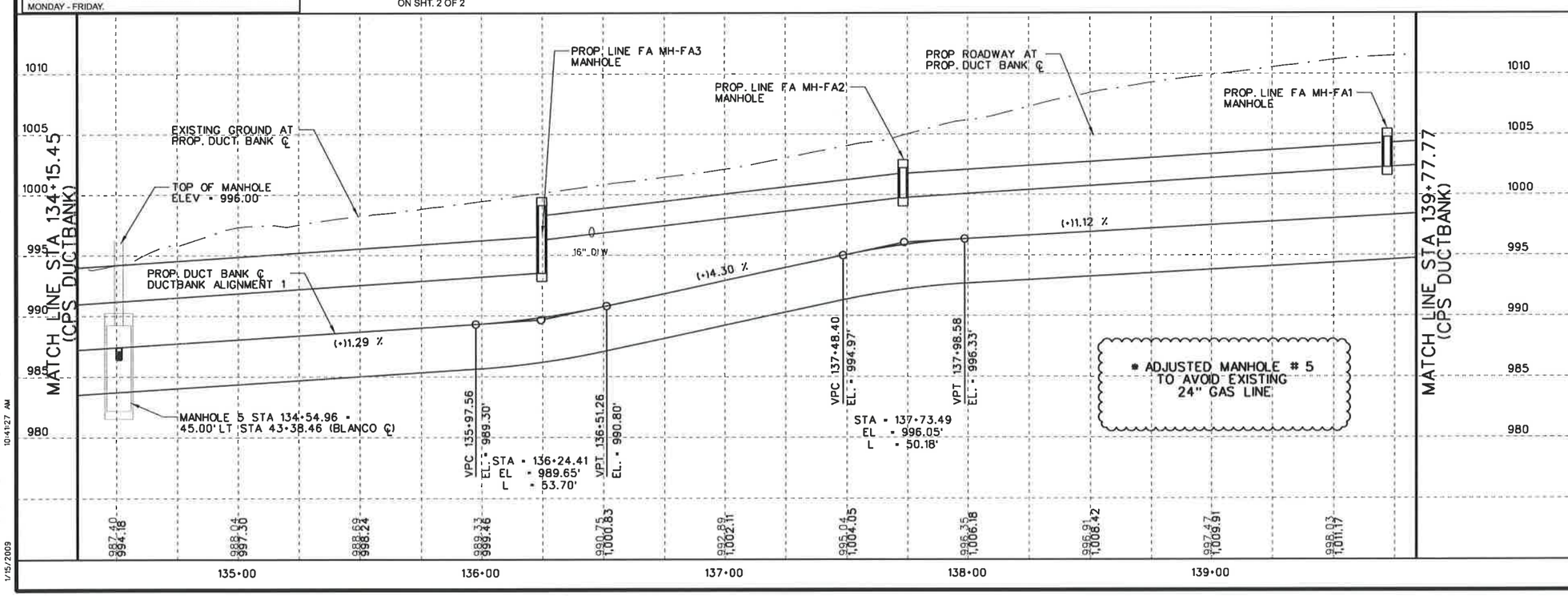

STATE OF TEXAS
Garland C. Galm
66781
REGISTERED PROFESSIONAL ENGINEER

GARLAND C. GALM, P.E.
1/15/2009

NO.	REVISION	BY	DATE
*	REVISED MANHOLE # 5 LOCATION		

WORK REQUEST NO.	WORK REQUEST TITLE / ADDRESS
3835821	BLANCO RD. CONVERSION

CPS ENERGY
P.O. BOX 1771
SAN ANTONIO, TX 78296

CEC
CIVIL ENGINEERING CONSULTANTS
SAN ANTONIO, TEXAS

BEXAR COUNTY
PUBLIC WORKS DIVISION

F.M. 2696 (BLANCO ROAD)
DUCTBANK
PLAN AND PROFILE

STA 134+14.99 TO STA 139+77.31

Planned: H.Snoga	Phone: 210-353-3764	SHEET 8 OF 9	
Designed: JR	STATE	BEXAR COUNTY FILE NUMBER	PLAN SET NO.
Checked: GG	TEXAS		560
Drawn: PW	COUNTY		OF
Checked: JR	BEXAR		842

x:\data\lxdot\projects\CPS_Blanco\UTILITY\change order nov 08\DuctbankPP08_COnov.dgn
10:41:27 AM
1/15/2009

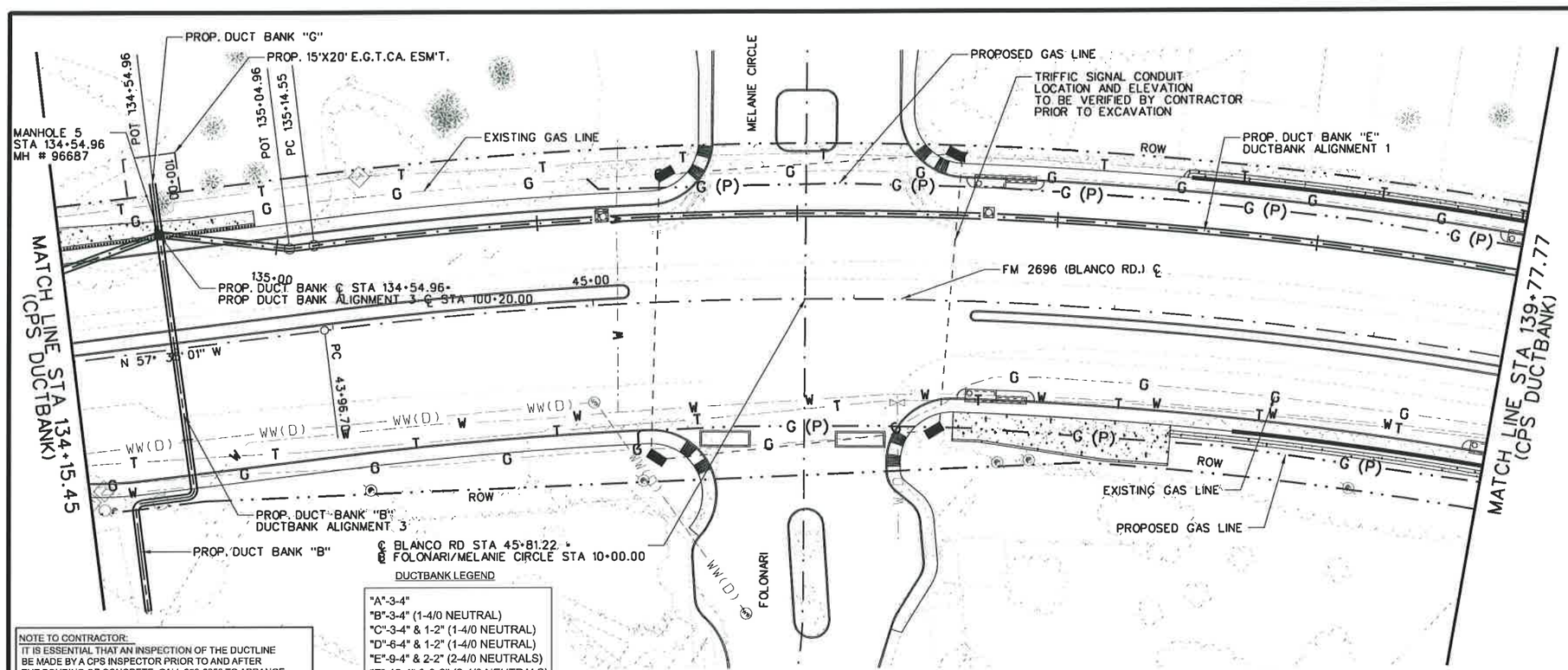

DUCTBANK LEGEND

"A"-3-4"
"B"-3-4" (1-4/0 NEUTRAL)
"C"-3-4" & 1-2" (1-4/0 NEUTRAL)
"D"-6-4" & 1-2" (1-4/0 NEUTRAL)
"E"-9-4" & 2-2" (2-4/0 NEUTRALS)
"F"-12-4" & 3-2" (2-4/0 NEUTRALS)
"G"-12-4" & 1-2"(3-4/0 NEUTRALS)

SEE TYPICAL DUCTLINE DETAILS ON SHT. 2 OF 2

NOTE TO CONTRACTOR:
IT IS ESSENTIAL THAT AN INSPECTION OF THE DUCTLINE BE MADE BY A CPS INSPECTOR PRIOR TO AND AFTER THE POURING OF CONCRETE. CALL 353-6850 TO ARRANGE FOR THE INSPECTION. TWENTY-FOUR HOURS ADVANCE NOTICE IS REQUIRED. WHEN CALLING FOR AN INSPECTION BE PREPARED TO REFERENCE JOB NUMBER AND ADDRESS SHOWN ON THIS COPY. CALL BETWEEN 8:00 A.M. AND 4:00 P.M. MONDAY - FRIDAY.

25 12.5 0 25 50
HORIZ. SCALE FEET

5 2.5 0 5 10
VERT. SCALE FEET

LEGEND

—— OE ——	OVERHEAD ELECTRIC LINE
—— CVT ——	CABLE TV LINE
—— W ——	WATER LINE
—— E ——	UNDERGROUND ELECTRIC LINE
—— T ——	UNDERGROUND TELEPHONE LINE
—— G ——	EXISTING GAS LINE
—— G (P) ——	PROPOSED GAS LINE
—— S.S ——	SANITARY SEWER LINE
—— WW(C) ——	WASTE WATER CLAY PIPE
—— FOC ——	FIBER OPTIC CABLE
—— TS ——	TRAFFIC SIGNALS
●	PROP. MANHOLE
═══	PROP. DUCT BANK

IMPORTANT
EXCAVATION SAFETY PLAN AND PROCEDURES

CITY PUBLIC SERVICE (CPS) CONSTRUCTION PERSONNEL OR CPS' CONTRACTOR (IN THE CASE OF CONTRACTED PROJECTS) SHALL REVIEW THESE PLANS, SKETCHES, SPECIFICATIONS AND ANTICIPATED EXCAVATION SITES WITHIN THE PROJECT WORK AREA IN ORDER TO IDENTIFY EXCAVATIONS THAT WILL REQUIRE AN EXCAVATION SAFETY PLAN AND PROCEDURE. THE EXCAVATION SAFETY PLAN AND PROCEDURES SHALL MEET OR EXCEED ALL REQUIREMENTS AS IDENTIFIED IN THE OCCUPATIONAL SAFETY AND HEALTH ADMINISTRATION'S (OSHA) STANDARD 29 CFR PART 1926 SUBPART P-EXCAVATIONS (7-1-94 EDITION). SPECIFICALLY, THE RESPONSIBLE PARTY SHALL DEVELOP AND IMPLEMENT AN EXCAVATION SAFETY PROGRAM IN ACCORDANCE WITH OSHA'S STANDARDS GOVERNING THE PRESENCE AND ACTIVITES OF INDIVIDUALS WORKING IN AND AROUND ANY EXCAVATION.

CONSTRUCTION NOTES
ALL FIELD CHANGES MUST BE APPROVED BY ENGINEERING. PLEASE CALL PLANNER IF ANY CHANGES ARE NECESSARY. CONSTRUCTION TO LOCATE AND VERIFY ALL UTILITIES PRIOR TO CONSTRUCTION.

NOTES:
1. THE CONTRACTOR SHALL BE RESPONSIBLE FOR COORDINATING LOCATIONS OF ALL EXISTING AND PROPOSED UTILITIES PRIOR TO EXCAVATING. ALL SUBSURFACE UTILITIES AND DRAINAGE FEATURES SHOWN ARE BASED ON INFORMATION PROVIDED ON CROSS SECTIONS DEVELOPED FOR THE ROADWAY PLANS.

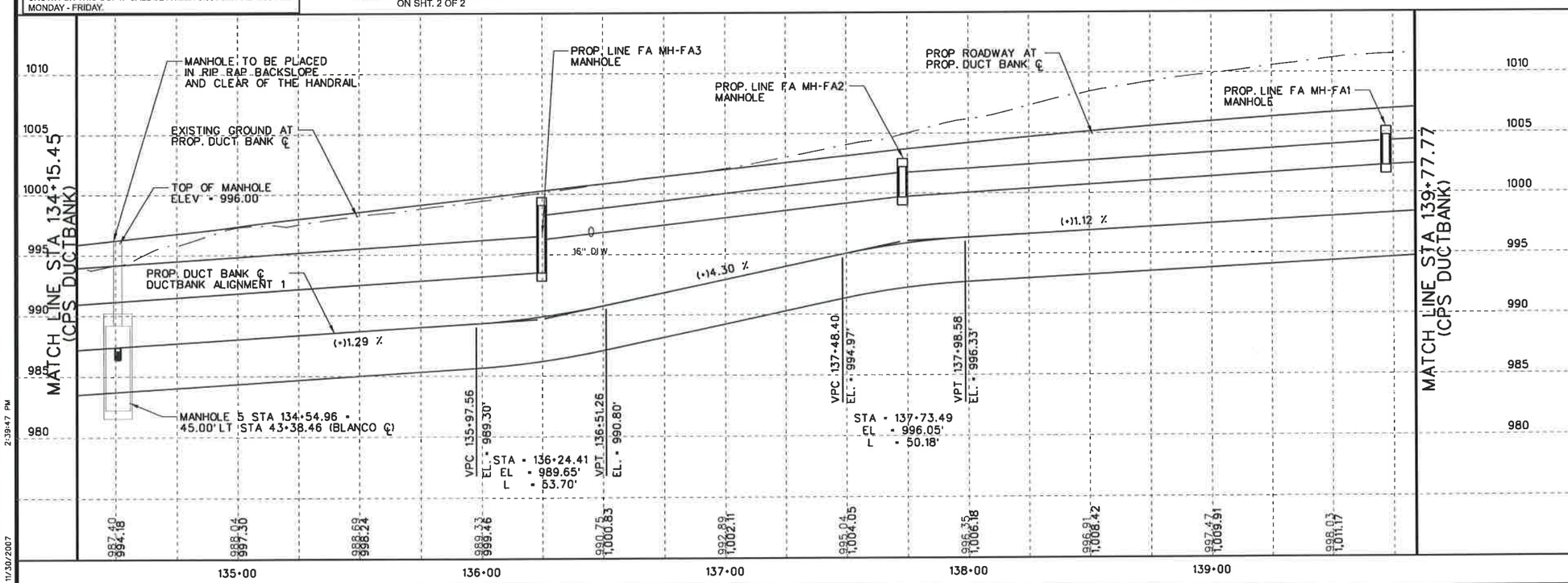

STATE OF TEXAS
Garland C. Galm
66781
REGISTERED PROFESSIONAL ENGINEER

GARLAND C. GALM, P.E.
11/30/2007

NO.	REVISION	BY	DATE

WORK REQUEST NO.	WORK REQUEST TITLE / ADDRESS
3835821	BLANCO RD. CONVERSION

CPS ENERGY
P.O. BOX 1771
SAN ANTONIO, TX 78296

CEC
CIVIL ENGINEERING CONSULTANTS
SAN ANTONIO, TEXAS

BEXAR COUNTY
PUBLIC WORKS DIVISION

F.M. 2696 (BLANCO ROAD)
DUCTBANK PLAN AND PROFILE

STA 134+14.99 TO STA 139+77.31

Planned: H.Snoga Phone: 210-353-3764 SHEET 8 OF 9

Designed: JR	STATE	BEXAR COUNTY FILE NUMBER	PLAN SET NO.
Checked: GG	TEXAS		560
Drawn: PW	COUNTY		OF
Checked: JR	BEXAR		842

x:\data\tsdal\projects\Cps_blanco\UTILITY\DuctbankPP08.dgn
11/30/2007 2:39:47 PM

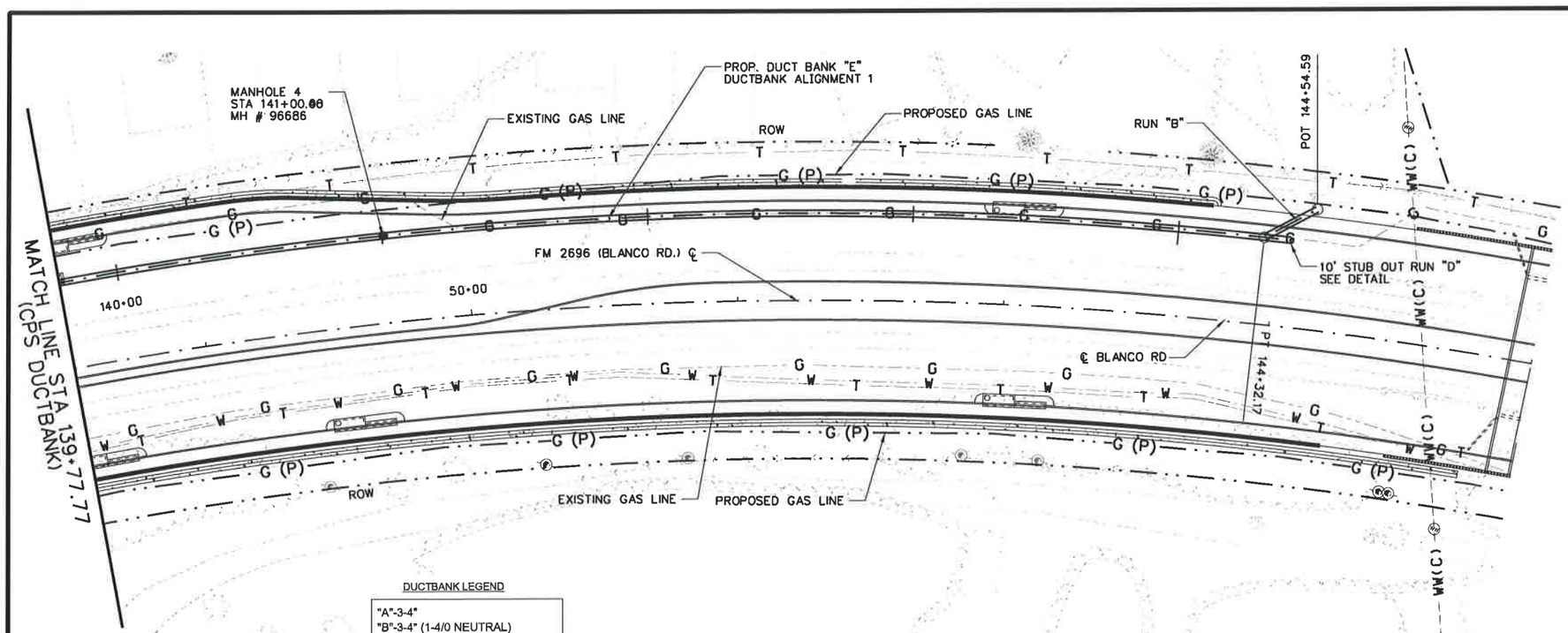

25 12.5 0 25 50
HORIZ. SCALE FEET

5 2.5 0 5 10
VERT. SCALE FEET

LEGEND

- OE — OVERHEAD ELECTRIC LINE
- CVT — CABLE TV LINE
- W — WATER LINE
- E — UNDERGROUND ELECTRIC LINE
- T — UNDERGROUND TELEPHONE LINE
- G — EXISTING GAS LINE
- G (P) — PROPOSED GAS LINE
- S.S — SANITARY SEWER LINE
- WW(C) — WASTE WATER CLAY PIPE
- FOC — FIBER OPTIC CABLE
- TS — TRAFFIC SIGNALS
- ● PROP. MANHOLE
- PROP. DUCT BANK

IMPORTANT
EXCAVATION SAFETY PLAN AND PROCEDURES

CITY PUBLIC SERVICE (CPS) CONSTRUCTION PERSONNEL OR CPS' CONTRACTOR (IN THE CASE OF CONTRACTED PROJECTS) SHALL REVIEW THESE PLANS, SKETCHES, SPECIFICATIONS AND ANTICIPATED EXCAVATION SITES WITHIN THE PROJECT WORK AREA IN ORDER TO IDENTIFY EXCAVATIONS THAT WILL REQUIRE AN EXCAVATION SAFETY PLAN AND PROCEDURE. THE EXCAVATION SAFETY PLAN AND PROCEDURES SHALL MEET OR EXCEED ALL REQUIREMENTS AS IDENTIFIED IN THE OCCUPATIONAL SAFETY AND HEALTH ADMINISTRATION'S (OSHA) STANDARD 29 CFR PART 1926 SUBPART P-EXCAVATIONS (7-1-94 EDITION). SPECIFICALLY, THE RESPONSIBLE PARTY SHALL DEVELOP AND IMPLEMENT AN EXCAVATION SAFETY PROGRAM IN ACCORDANCE WITH OSHA'S STANDARDS GOVERNING THE PRESENCE AND ACTIVITES OF INDIVIDUALS WORKING IN AND AROUND ANY EXCAVATION.

CONSTRUCTION NOTES

ALL FIELD CHANGES MUST BE APPROVED BY ENGINEERING. PLEASE CALL PLANNER IF ANY CHANGES ARE NECESSARY. CONSTRUCTION TO LOCATE AND VERIFY ALL UTILITIES PRIOR TO CONSTRUCTION.

NOTE TO CONTRACTOR:
IT IS ESSENTIAL THAT AN INSPECTION OF THE DUCTLINE BE MADE BY A CPS INSPECTOR PRIOR TO AND AFTER THE POURING OF CONCRETE. CALL 353-6850 TO ARRANGE FOR THE INSPECTION. TWENTY-FOUR HOURS ADVANCE NOTICE IS REQUIRED. WHEN CALLING FOR AN INSPECTION BE PREPARED TO REFERENCE JOB NUMBER AND ADDRESS SHOWN ON THIS COPY. CALL BETWEEN 8:00 A.M. AND 4:00 P.M. MONDAY - FRIDAY.

DUCTBANK LEGEND

"A"-3-4"
"B"-3-4" (1-4/0 NEUTRAL)
"C"-3-4" & 1-2" (1-4/0 NEUTRAL)
"D"-6-4" & 1-2" (1-4/0 NEUTRAL)
"E"-9-4" & 2-2" (2-4/0 NEUTRALS)
"F"-12-4" & 3-2" (2-4/0 NEUTRALS)
"G"-12-4" & 1-2"(3-4/0 NEUTRALS)

SEE TYPICAL DUCTLINE DETAILS ON SHT. 2 OF 2

NOTES:
1. THE CONTRACTOR SHALL BE RESPONSIBLE FOR COORDINATING LOCATIONS OF ALL EXISTING AND PROPOSED UTILITIES PRIOR TO EXCAVATING. ALL SUBSURFACE UTILITIES AND DRAINAGE FEATURES SHOWN ARE BASED ON INFORMATION PROVIDED ON CROSS SECTIONS DEVELOPED FOR THE ROADWAY PLANS.

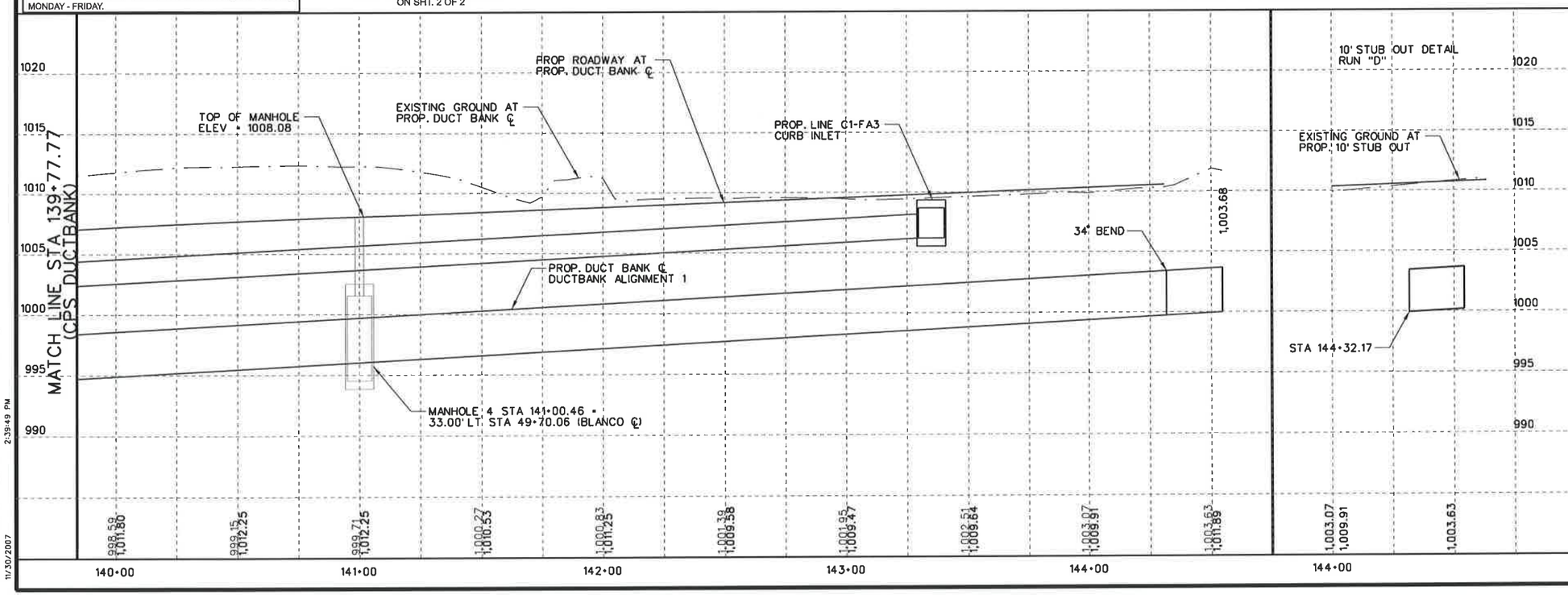

STATE OF TEXAS
Garland C. Galm
66781
REGISTERED PROFESSIONAL ENGINEER

GARLAND C. GALM, P.E.
11/30/2007

NO.	REVISION	BY	DATE

WORK REQUEST NO.	WORK REQUEST TITLE / ADDRESS
3835821	BLANCO RD. CONVERSION

CPS ENERGY
P.O. BOX 1771
SAN ANTONIO, TX 78296

CEC
CIVIL ENGINEERING CONSULTANTS
SAN ANTONIO, TEXAS

BEXAR COUNTY
PUBLIC WORKS DIVISION

F.M. 2696 (BLANCO ROAD)
DUCTBANK PLAN AND PROFILE
STA 139+77.31 TO STA 144+54.13

Planned: H.Snoga	Phone: 210-353-3764		SHEET 9 OF 9
Designed: JR	STATE	BEXAR COUNTY FILE NUMBER	PLAN SET NO.
Checked: GG	TEXAS		561
Drawn: PW	COUNTY		OF
Checked: JR	BEXAR		842

x:\data\txdot\projects\Cps_blanco\UTILITY\DuctbankPP09.dgn
11/30/2007 2:39:49 PM

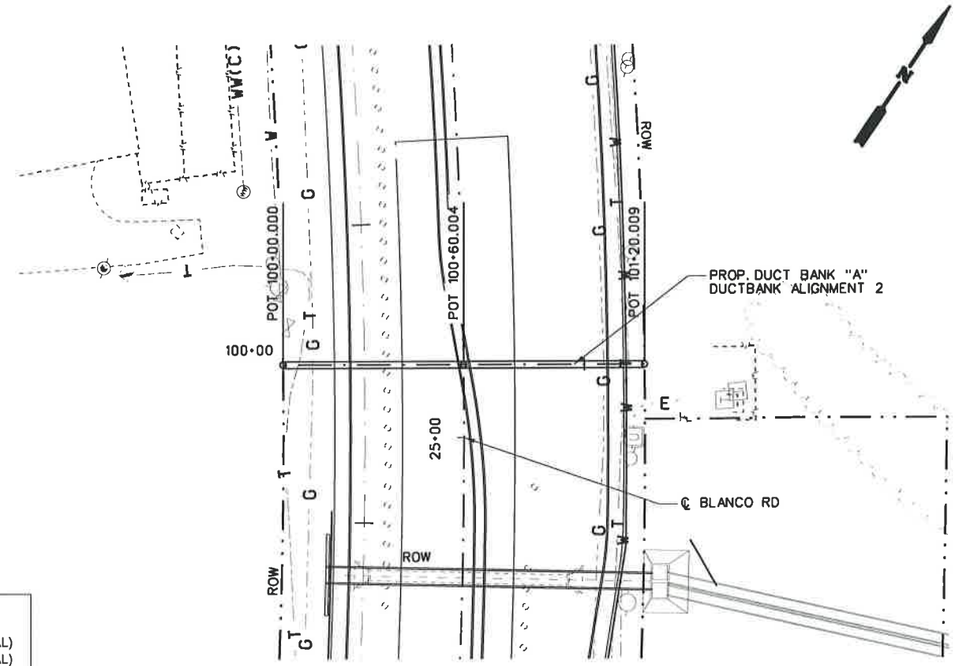

25 12.5 0 25 50
HORIZ. SCALE FEET

5 2.5 0 5 10
VERT. SCALE FEET

LEGEND

—— OE ——	OVERHEAD ELECTRIC LINE
—— CVT ——	CABLE TV LINE
—— W ——	WATER LINE
—— E ——	UNDERGROUND ELECTRIC LINE
—— T ——	UNDERGROUND TELEPHONE LINE
- - - G - - -	EXISTING GAS LINE
- - - G (P) - -	PROPOSED GAS LINE
—— S.S ——	SANITARY SEWER LINE
—— WW(C) ——	WASTE WATER CLAY PIPE
—— FOC ——	FIBER OPTIC CABLE
—— TS ——	TRAFFIC SIGNALS
●	PROP. MANHOLE
═══	PROP. DUCT BANK

IMPORTANT
EXCAVATION SAFETY PLAN AND PROCEDURES

CITY PUBLIC SERVICE (CPS) CONSTRUCTION PERSONNEL OR CPS' CONTRACTOR (IN THE CASE OF CONTRACTED PROJECTS) SHALL REVIEW THESE PLANS, SKETCHES, SPECIFICATIONS AND ANTICIPATED EXCAVATION SITES WITHIN THE PROJECT WORK AREA IN ORDER TO IDENTIFY EXCAVATIONS THAT WILL REQUIRE AN EXCAVATION SAFETY PLAN AND PROCEDURE. THE EXCAVATION SAFETY PLAN AND PROCEDURES SHALL MEET OR EXCEED ALL REQUIREMENTS AS IDENTIFIED IN THE OCCUPATIONAL SAFETY AND HEALTH ADMINISTRATION'S (OSHA) STANDARD 29 CFR PART 1926 SUBPART P-EXCAVATIONS (7-1-94 EDITION). SPECIFICALLY, THE RESPONSIBLE PARTY SHALL DEVELOP AND IMPLEMENT AN EXCAVATION SAFETY PROGRAM IN ACCORDANCE WITH OSHA'S STANDARDS GOVERNING THE PRESENCE AND ACTIVITES OF INDIVIDUALS WORKING IN AND AROUND ANY EXCAVATION.

CONSTRUCTION NOTES

ALL FIELD CHANGES MUST BE APPROVED BY ENGINEERING. PLEASE CALL PLANNER IF ANY CHANGES ARE NECESSARY. CONSTRUCTION TO LOCATE AND VERIFY ALL UTILITIES PRIOR TO CONSTRUCTION.

NOTE TO CONTRACTOR:
IT IS ESSENTIAL THAT AN INSPECTION OF THE DUCTLINE BE MADE BY A CPS INSPECTOR PRIOR TO AND AFTER THE POURING OF CONCRETE. CALL 353-6850 TO ARRANGE FOR THE INSPECTION. TWENTY-FOUR HOURS ADVANCE NOTICE IS REQUIRED. WHEN CALLING FOR AN INSPECTION BE PREPARED TO REFERENCE JOB NUMBER AND ADDRESS SHOWN ON THIS COPY. CALL BETWEEN 8:00 A.M. AND 4:00 P.M. MONDAY - FRIDAY.

DUCTBANK LEGEND

"A"-3-4"
"B"-3-4" (1-4/0 NEUTRAL)
"C"-3-4" & 1-2" (1-4/0 NEUTRAL)
"D"-6-4" & 1-2" (1-4/0 NEUTRAL)
"E"-9-4" & 2-2" (2-4/0 NEUTRALS)
"F"-12-4" & 3-2" (2-4/0 NEUTRALS)
"G"-12-4" & 1-2"(3-4/0 NEUTRALS)

SEE TYPICAL DUCTLINE DETAILS ON SHT. 2 OF 2

NOTES:
1. THE CONTRACTOR SHALL BE RESPONSIBLE FOR COORDINATING LOCATIONS OF ALL EXISTING AND PROPOSED UTILITIES PRIOR TO EXCAVATING. ALL SUBSURFACE UTILITIES AND DRAINAGE FEATURES SHOWN ARE BASED ON INFORMATION PROVIDED ON CROSS SECTIONS DEVELOPED FOR THE ROADWAY PLANS.

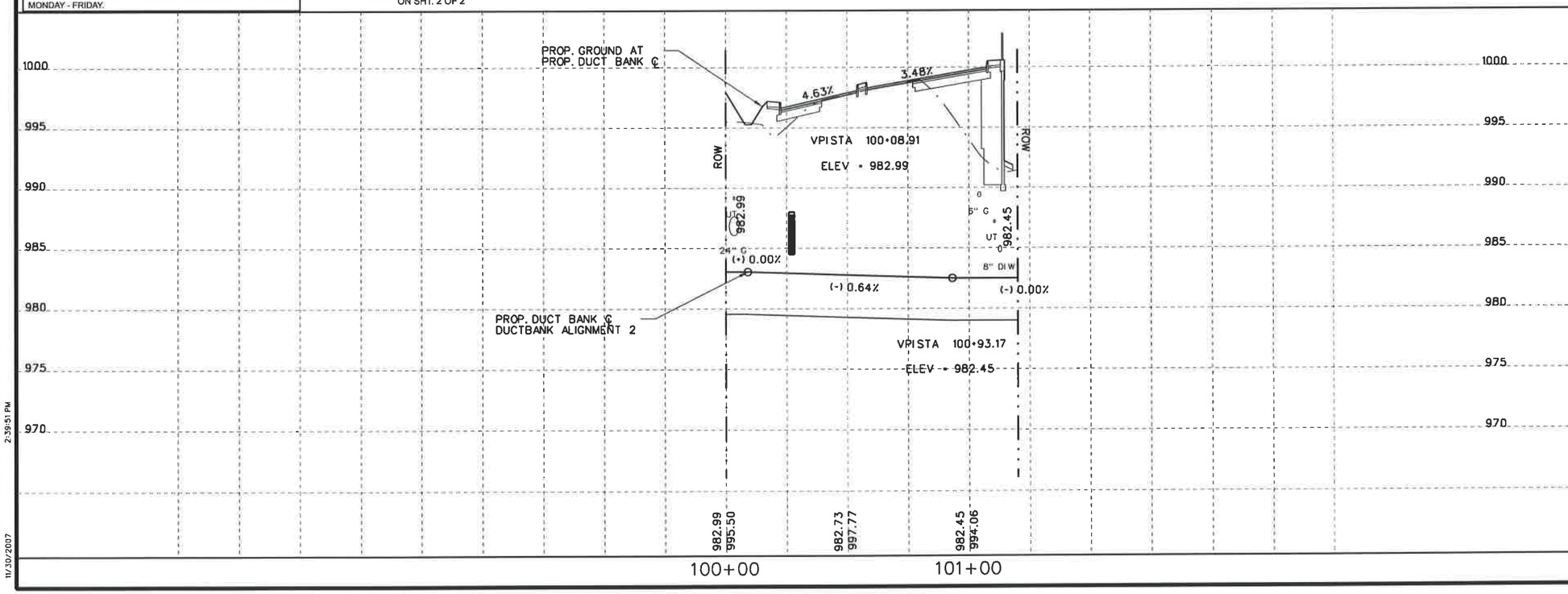

STATE OF TEXAS
Garland C. Galm
66781
REGISTERED PROFESSIONAL ENGINEER

GARLAND C. GALM, P.E.
11/30/2007

NO.	REVISION	BY	DATE

WORK REQUEST NO.	WORK REQUEST TITLE / ADDRESS
3835821	BLANCO RD. CONVERSION

CPS ENERGY
P.O. BOX 1771
SAN ANTONIO, TX 78296

CEC
CIVIL ENGINEERING CONSULTANTS
SAN ANTONIO, TEXAS

BEXAR COUNTY
PUBLIC WORKS DIVISION

F.M. 2696 (BLANCO ROAD)
DUCTBANK LATERAL (ALIGN 2)
PLAN AND PROFILE
STA 21+50.00 TO STA 26+50.00

Planned: H.Snoga	Phone: 210-353-3764	SHEET 1 OF 2	
Designed: JR	STATE	BEXAR COUNTY FILE NUMBER	PLAN SET NO.
Checked: GG	TEXAS		562
Drawn: PW	COUNTY		OF
Checked: JR	BEXAR		842

x:\data\tsdot\projects\Ecps_blanco\utility\Ductbank02PP.dgn
11/30/2007 2:39:51 PM

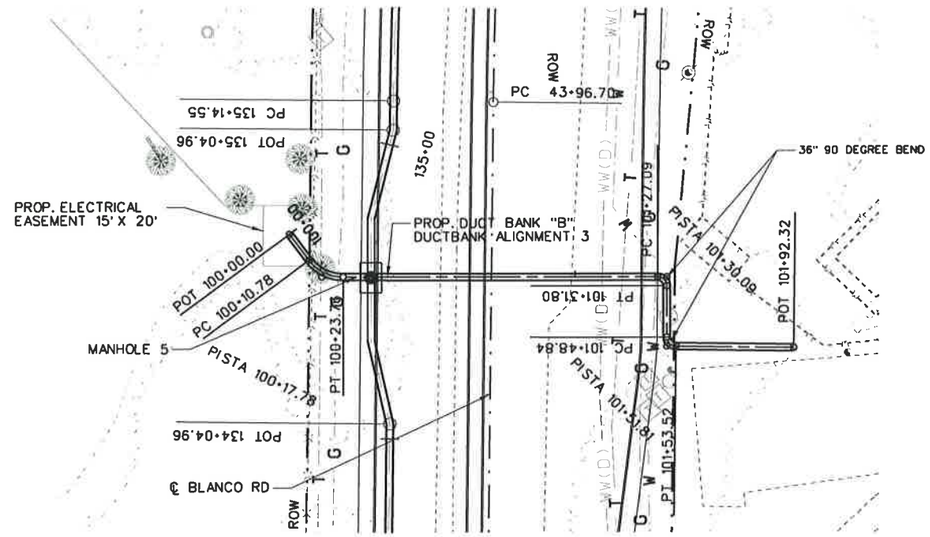

CHANGE ORDER #
REVISED DUCTBANK ALIGNMENT 3
FROM STA 100+00 TO STA 100+23.76

NOTE TO CONTRACTOR:
IT IS ESSENTIAL THAT AN INSPECTION OF THE DUCTLINE BE MADE BY A CPS INSPECTOR PRIOR TO AND AFTER THE POURING OF CONCRETE. CALL 353-6850 TO ARRANGE FOR THE INSPECTION. TWENTY-FOUR HOURS ADVANCE NOTICE IS REQUIRED. WHEN CALLING FOR AN INSPECTION BE PREPARED TO REFERENCE JOB NUMBER AND ADDRESS SHOWN ON THIS COPY. CALL BETWEEN 8:00 A.M. AND 4:00 P.M. MONDAY - FRIDAY.

DUCTBANK LEGEND

"A"-3-4"
"B"-3-4" (1-4/0 NEUTRAL)
"C"-3-4" & 1-2" (1-4/0 NEUTRAL)
"D"-6-4" & 1-2" (1-4/0 NEUTRAL)
"E"-9-4" & 2-2" (2-4/0 NEUTRALS)
"F"-12-4" & 3-2" (2-4/0 NEUTRALS)
"G"-12-4" & 1-2"(3-4/0 NEUTRALS)

SEE TYPICAL DUCTLINE DETAILS ON SHT. 2 OF 2

25 12.5 0 25 50
HORIZ. SCALE FEET

5 2.5 0 5 10
VERT. SCALE FEET

LEGEND

—— OE ——	OVERHEAD ELECTRIC LINE
—— CVT ——	CABLE TV LINE
—— W ——	WATER LINE
—— E ——	UNDERGROUND ELECTRIC LINE
—— T ——	UNDERGROUND TELEPHONE LINE
—— G ——	EXISTING GAS LINE
—— G (P) ——	PROPOSED GAS LINE
—— S.S ——	SANITARY SEWER LINE
—— WW(C) ——	WASTE WATER CLAY PIPE
—— FOC ——	FIBER OPTIC CABLE
—— TS ——	TRAFFIC SIGNALS
●	PROP. MANHOLE
═══	PROP. DUCT BANK

IMPORTANT
EXCAVATION SAFETY PLAN AND PROCEDURES

CITY PUBLIC SERVICE (CPS) CONSTRUCTION PERSONNEL OR CPS' CONTRACTOR (IN THE CASE OF CONTRACTED PROJECTS) SHALL REVIEW THESE PLANS, SKETCHES, SPECIFICATIONS AND ANTICIPATED EXCAVATION SITES WITHIN THE PROJECT WORK AREA IN ORDER TO IDENTIFY EXCAVATIONS THAT WILL REQUIRE AN EXCAVATION SAFETY PLAN AND PROCEDURE. THE EXCAVATION SAFETY PLAN AND PROCEDURES SHALL MEET OR EXCEED ALL REQUIREMENTS AS IDENTIFIED IN THE OCCUPATIONAL SAFETY AND HEALTH ADMINISTRATION'S (OSHA) STANDARD 29 CFR PART 1926 SUBPART P-EXCAVATIONS (7-1-94 EDITION). SPECIFICALLY, THE RESPONSIBLE PARTY SHALL DEVELOP AND IMPLEMENT AN EXCAVATION SAFETY PROGRAM IN ACCORDANCE WITH OSHA'S STANDARDS GOVERNING THE PRESENCE AND ACTIVITES OF INDIVIDUALS WORKING IN AND AROUND ANY EXCAVATION.

CONSTRUCTION NOTES
ALL FIELD CHANGES MUST BE APPROVED BY ENGINEERING. PLEASE CALL PLANNER IF ANY CHANGES ARE NECESSARY. CONSTRUCTION TO LOCATE AND VERIFY ALL UTILITIES PRIOR TO CONSTRUCTION.

NOTES:
1. THE CONTRACTOR SHALL BE RESPONSIBLE FOR COORDINATING LOCATIONS OF ALL EXISTING AND PROPOSED UTILITIES PRIOR TO EXCAVATING. ALL SUBSURFACE UTILITIES AND DRAINAGE FEATURES SHOWN ARE BASED ON INFORMATION PROVIDED ON CROSS SECTIONS DEVELOPED FOR THE ROADWAY PLANS.

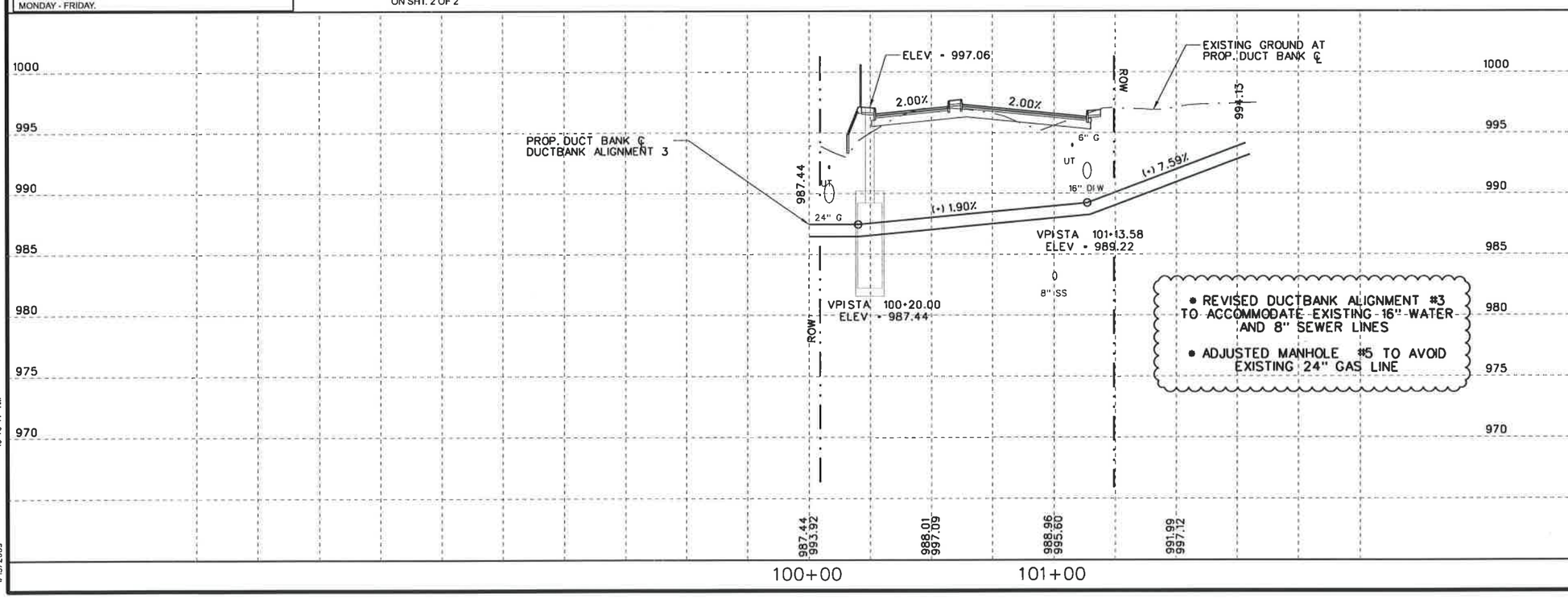

STATE OF TEXAS
Garland C. Galm
66781
REGISTERED PROFESSIONAL ENGINEER

GARLAND C. GALM, P.E.
1/15/2009

NO.	REVISION	BY	DATE
•	REVISED PROFILE AND MANHOLE #5 LOCATION		

WORK REQUEST NO.	WORK REQUEST TITLE / ADDRESS
3835821	BLANCO RD. CONVERSION

CPS ENERGY
P.O. BOX 1771
SAN ANTONIO, TX 78296

CEC CIVIL ENGINEERING CONSULTANTS
SAN ANTONIO, TEXAS

BEXAR COUNTY
PUBLIC WORKS DIVISION

F.M. 2696 (BLANCO ROAD)
DUCTBANK LATERAL (ALIGN 3)
PLAN AND PROFILE
STA 21+50.00 TO STA 26+50.00

Planned: H.Snogo	Phone: 210-353-3764		SHEET 2 OF 2
Designed: JR	STATE	BEXAR COUNTY FILE NUMBER	PLAN SET NO.
Checked: GG	TEXAS		563
Drawn: PW	COUNTY		OF
Checked: JR	BEXAR		842

x:\data\ladal\projects\CPS_Blanco\UTILITY\change order nov 08\Ductbank03PP_CONOV.dgn
1/15/2009 10:40:47 AM

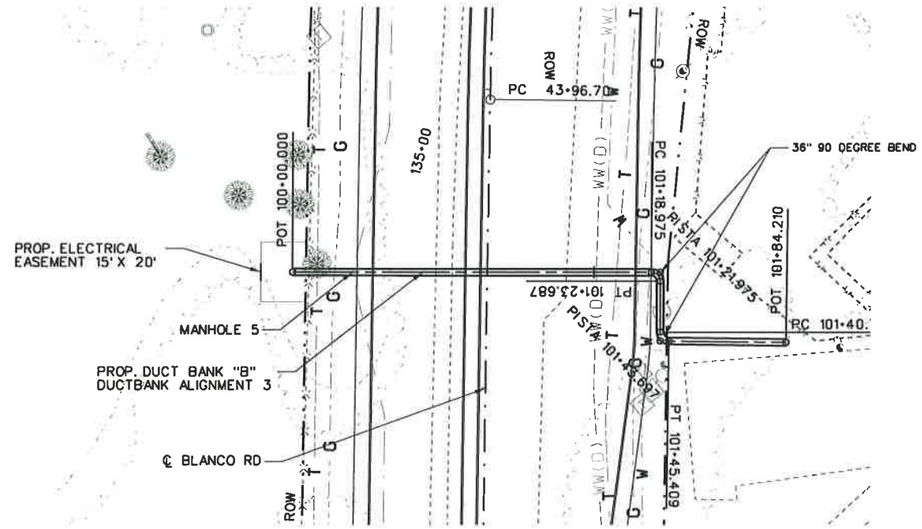

25 12.5 0 25 50
HORIZ. SCALE FEET

5 2.5 0 5 10
VERT. SCALE FEET

LEGEND

- OE — OVERHEAD ELECTRIC LINE
- CVT — CABLE TV LINE
- W — WATER LINE
- E — UNDERGROUND ELECTRIC LINE
- T — UNDERGROUND TELEPHONE LINE
- G — EXISTING GAS LINE
- G (P) — PROPOSED GAS LINE
- S.S — SANITARY SEWER LINE
- WW(C) — WASTE WATER CLAY PIPE
- FOC — FIBER OPTIC CABLE
- TS — TRAFFIC SIGNALS
- PROP. MANHOLE
- PROP. DUCT BANK

IMPORTANT
EXCAVATION SAFETY PLAN AND PROCEDURES

CITY PUBLIC SERVICE (CPS) CONSTRUCTION PERSONNEL OR CPS' CONTRACTOR (IN THE CASE OF CONTRACTED PROJECTS) SHALL REVIEW THESE PLANS, SKETCHES, SPECIFICATIONS AND ANTICIPATED EXCAVATION SITES WITHIN THE PROJECT WORK AREA IN ORDER TO IDENTIFY EXCAVATIONS THAT WILL REQUIRE AN EXCAVATION SAFETY PLAN AND PROCEDURE. THE EXCAVATION SAFETY PLAN AND PROCEDURES SHALL MEET OR EXCEED ALL REQUIREMENTS AS IDENTIFIED IN THE OCCUPATIONAL SAFETY AND HEALTH ADMINISTRATION'S (OSHA) STANDARD 29 CFR PART 1926 SUBPART P-EXCAVATIONS (7-1-94 EDITION). SPECIFICALLY, THE RESPONSIBLE PARTY SHALL DEVELOP AND IMPLEMENT AN EXCAVATION SAFETY PROGRAM IN ACCORDANCE WITH OSHA'S STANDARDS GOVERNING THE PRESENCE AND ACTIVITES OF INDIVIDUALS WORKING IN AND AROUND ANY EXCAVATION.

CONSTRUCTION NOTES
ALL FIELD CHANGES MUST BE APPROVED BY ENGINEERING. PLEASE CALL PLANNER IF ANY CHANGES ARE NECESSARY. CONSTRUCTION TO LOCATE AND VERIFY ALL UTILITIES PRIOR TO CONSTRUCTION.

NOTE TO CONTRACTOR:
IT IS ESSENTIAL THAT AN INSPECTION OF THE DUCTLINE BE MADE BY A CPS INSPECTOR PRIOR TO AND AFTER THE POURING OF CONCRETE. CALL 353-6850 TO ARRANGE FOR THE INSPECTION. TWENTY-FOUR HOURS ADVANCE NOTICE IS REQUIRED. WHEN CALLING FOR AN INSPECTION BE PREPARED TO REFERENCE JOB NUMBER AND ADDRESS SHOWN ON THIS COPY. CALL BETWEEN 8:00 A.M. AND 4:00 P.M. MONDAY - FRIDAY.

DUCTBANK LEGEND

"A"-3-4"
"B"-3-4" (1-4/0 NEUTRAL)
"C"-3-4" & 1-2" (1-4/0 NEUTRAL)
"D"-6-4" & 1-2" (1-4/0 NEUTRAL)
"E"-9-4" & 2-2" (2-4/0 NEUTRALS)
"F"-12-4" & 3-2" (2-4/0 NEUTRALS)
"G"-12-4" & 1-2"(3-4/0 NEUTRALS)

SEE TYPICAL DUCTLINE DETAILS ON SHT. 2 OF 2

NOTES:
1. THE CONTRACTOR SHALL BE RESPONSIBLE FOR COORDINATING LOCATIONS OF ALL EXISTING AND PROPOSED UTILITIES PRIOR TO EXCAVATING. ALL SUBSURFACE UTILITIES AND DRAINAGE FEATURES SHOWN ARE BASED ON INFORMATION PROVIDED ON CROSS SECTIONS DEVELOPED FOR THE ROADWAY PLANS.

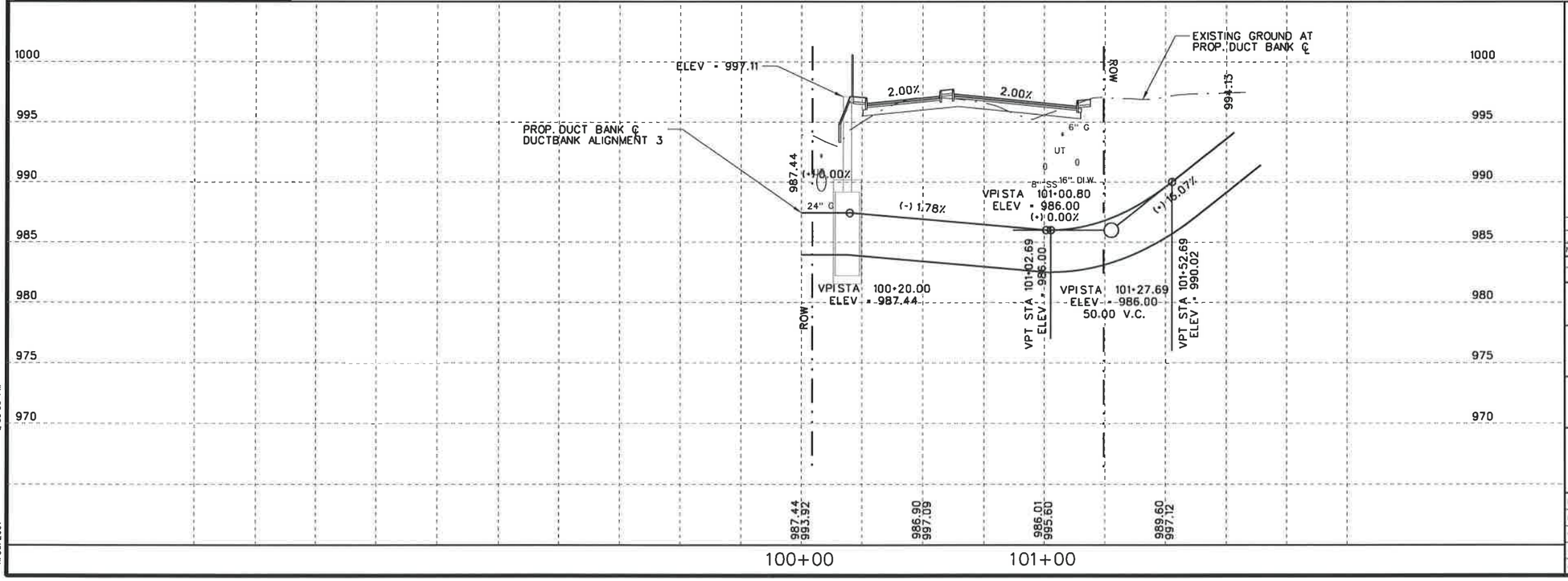

GARLAND C. GALM, P.E.
11/30/2007

NO.	REVISION	BY	DATE

WORK REQUEST NO.	WORK REQUEST TITLE / ADDRESS
3835821	BLANCO RD. CONVERSION

CPS ENERGY
P.O. BOX 1771
SAN ANTONIO, TX 78296

CEC CIVIL ENGINEERING CONSULTANTS SAN ANTONIO, TEXAS

BEXAR COUNTY
PUBLIC WORKS DIVISION

F.M. 2696 (BLANCO ROAD)
DUCTBANK LATERAL (ALIGN 3) PLAN AND PROFILE
STA 21+50.00 TO STA 26+50.00

Planned: H.Snoga	Phone: 210-353-3764	SHEET 2 OF 2	
Designed: JR	STATE	BEXAR COUNTY FILE NUMBER	PLAN SET NO.
Checked: GG	TEXAS		563
Drawn: PW	COUNTY		OF
Checked: JR	BEXAR		842

x:\data\txdot\projects\Ecps_blanco\utility\Ductbank03PP.dgn
2:39:53 PM
11/30/2007

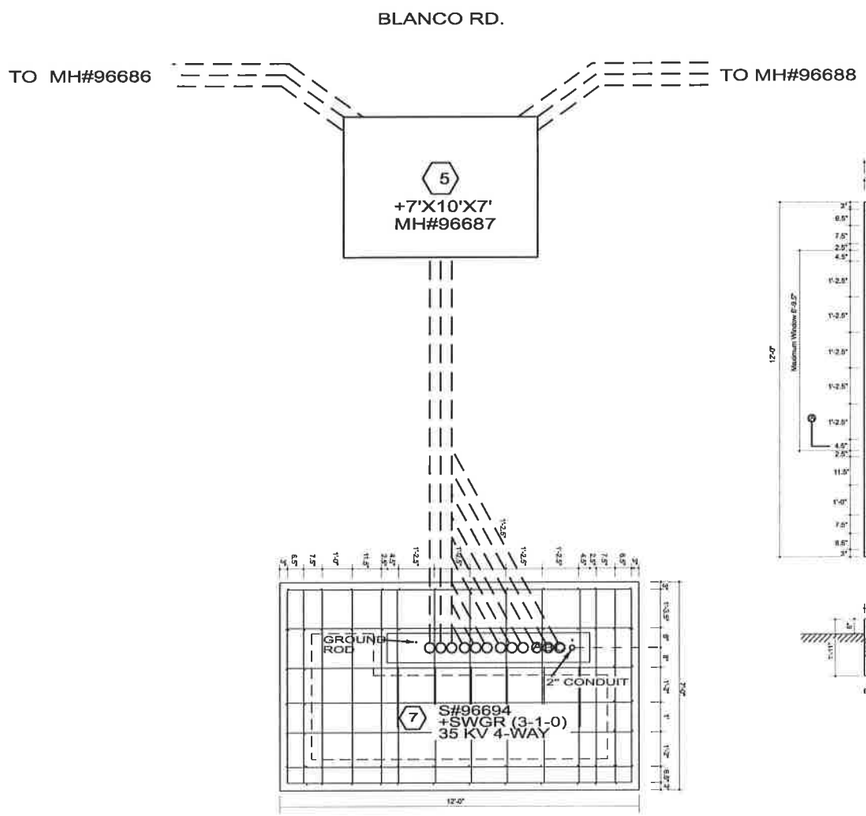

SWGR DETAIL

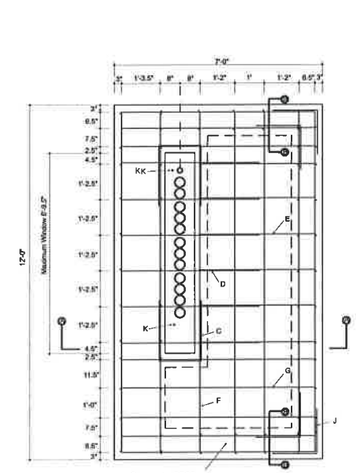

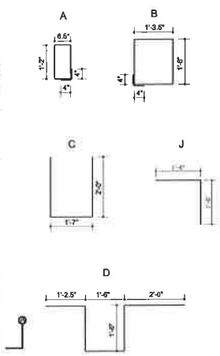

Steel Reinforcement Bars

(A) 22 No. 3 Bars 4' - 1"
(B) 12 No. 3 Bars 6' - 3"
(C) 6 No. 5 Bars 5' - 7"
(D) 6 No. 3 Bars 7' - 8.5"
(E) 12 No. 5 Bars 3' - 10.5"
(F) 18 No. 5 Bars 11' - 6"
(G) 20 No. 5 Bars 6' - 6"
(H) 2 No. 5 Bars 8' - 4.5"
(J) 12 No. 3 Bars 3' - 0"

Copper Ground Rod

(K) 2 Copper Rod 5/8" X 8' (Supplied By CPS)

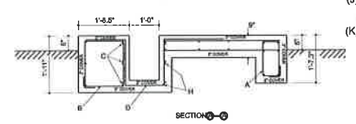

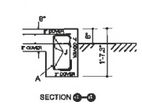

12' X 7' SWITCHGEAR SLAB DETAIL
4-WAY 35 kV RATED
(12 - 4" & 1 - 2")
(3-4/0 NUETRALS)

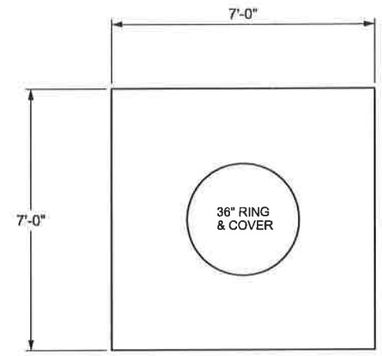

PLAN VIEW

NOTES:
1. CONCRETE TO BE CLASS HES IN ACCORDANCE WITH ITEM 421 AND ITEM 360.
2. REINFORCING STEEL TO BE GRADE 60 IN ACCORDANCE WITH ITEM 440.
3. SURFACE TO RECEIVE A UNIFORM BROOM FINISH
4. THIS ITEM WILL NOT BE PAID FOR INDIVIDUALY BUT WILL BE CONSIDERED SUBSIDIARY TO THE ITEM "DUCT BANK".

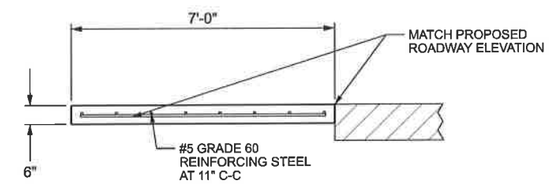

SECTION
CONCRETE SLAB DETAIL

STATE OF TEXAS
Garland C. Galm
66781
REGISTERED
PROFESSIONAL ENGINEER

GARLAND C. GALM, P.E.
11/30/2007

NO.	REVISION	BY	DATE

WORK REQUEST NO.	WORK REQUEST TITLE / ADDRESS
3835821	BLANCO RD. CONVERSION

CPS ENERGY
P.O. BOX 1771
SAN ANTONIO, TX 78296

CEC
CIVIL ENGINEERING CONSULTANTS
SAN ANTONIO, TEXAS

BEXAR COUNTY
PUBLIC WORKS DIVISION

F.M. 2696 (BLANCO ROAD)
DUCTBANK
DETAILS

Planned: H.Snoga	Phone: 210-353-3764	SHEET 1 OF 2	
Designed: JR	STATE	BEXAR COUNTY FILE NUMBER	PLAN SET NO.
Checked: GG	TEXAS		564
Drawn: PW	COUNTY		OF
Checked: JR	BEXAR		842

x:\data\tsdal\projects\cps_blanco\utility\cecdetails01.dgn
11/30/2007 2:39:57 PM

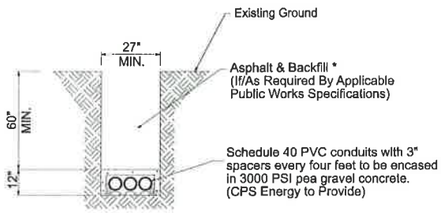

DUCTLINE DETAIL "A"
3-4" CONDUITS

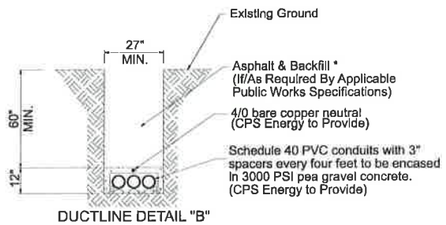

DUCTLINE DETAIL "B"
3-4" CONDUITS
(1-4/0 NEUTRAL)

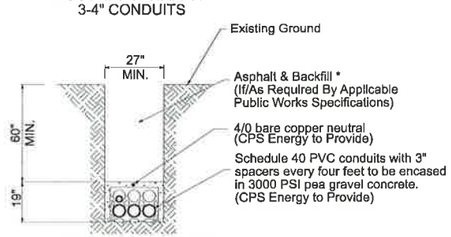

DUCTLINE DETAIL "C"
3-4" & 1-2" CONDUITS
(1-4/0 NEUTRAL)

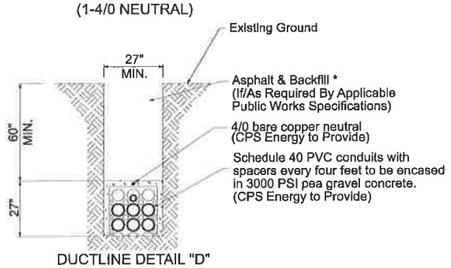

DUCTLINE DETAIL "D"
6-4" & 1-2" CONDUITS
(1-4/0 NEUTRAL)

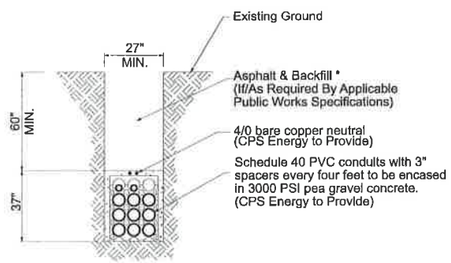

DUCTLINE DETAIL "E"
9-4" & 2-2" CONDUITS
(2-4/0 NEUTRALS)

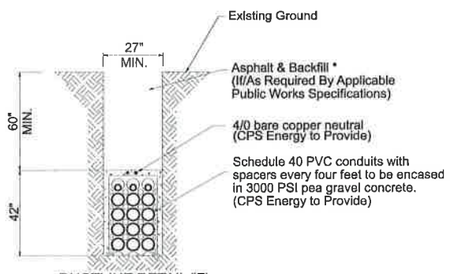

DUCTLINE DETAIL "F"
12-4" & 3-2" CONDUITS
(2-4/0 NEUTRALS)

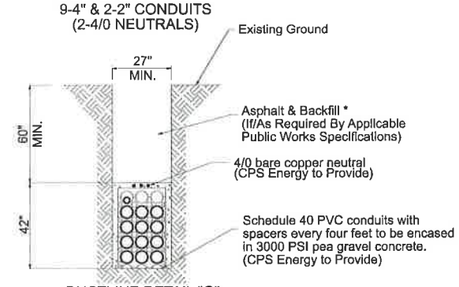

DUCTLINE DETAIL "G"
12-4" & 1-2" CONDUITS
(3-4/0 NEUTRALS)

* FLOWABLE BACKFILL FROM TOP OF CL A CONCRETE TO EXISTING GROUND LINE

7' X 10' X 7' MANHOLE SPECIFICATIONS (PAVED AREAS) (CPS ENERGY TO PROVIDE)

Manhole (vaults) furnished under this request will be used as an enclosure for energized underground primary cables used to supply electrical energy to residential, commercial, of industrial loads.

All components shall meet traffic bearing design loads as specified in HS20-44 bridge loading in accordance with American Association of State Highway Officials Standard Specifications.

Construction of the unit shall be such that it can be lifted and lowered into position. Suitable lift bolts shall be provided on both top and lower sections of the vault as indicated.

Manufacturer shall supply an adequate amount of joint sealing compound for each manhole (vault). The sealing compound is placed in the grooves to act as a water tight joining of precast sections.

The floor will have a slight slope towards the center to provide drainage into the sump hole. Sump hole will be 12" deep with bottom sealed.

Pulling eyes for bottom section shall not be in the floor. The eyes should be in the corners below the conduit knockouts.

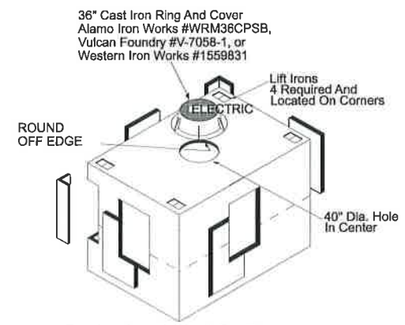

Design Load Shall Be For
H-20 Bridge Loading (See Note Above)

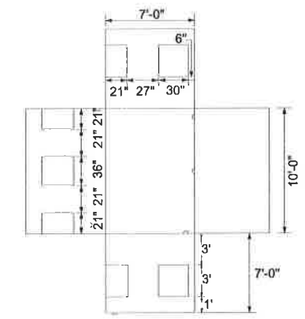

Inside Dimensions

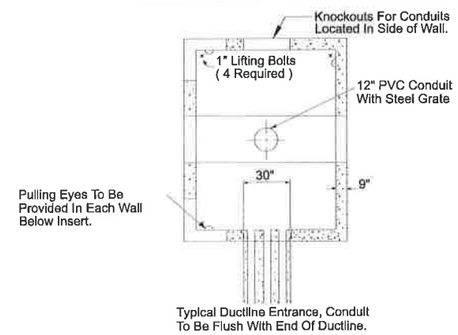

Top View Of Bottom Section

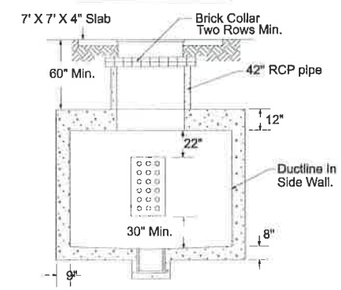

Cross Section View Of Manhole

STATE OF TEXAS
Garland C. Galm
66781
REGISTERED PROFESSIONAL ENGINEER

GARLAND C. GALM, P.E.
11/30/2007

Contractor Notes

Contractor shall install a traffic bearing cast iron ring and cover marked "ELECTRIC" (CPS ENERGY to provide). The ring and cover shall have a 36" diameter opening.

Contractor shall install a 42" RCP pipe (CPS ENERGY to provide), in addition to a brick collar, (Plasted and sealed) 2 rows high (CPS ENERGY to provide), between the roof of the manhole and the bottom of the ring and cover. The minimum cover from final grade to top of manhole shall be 60".

Contractor shall install a 7' X 7' X 6" concrete slab around the ring and cover.
Contractor shall supply and install flowable fill around entire manhole up to the top of the neck.

Contractor must ensure manhole is level by stabilizing floor with 4 inches of compacted base material

NO.	REVISION	BY	DATE

WORK REQUEST NO.	WORK REQUEST TITLE / ADDRESS
3835821	BLANCO RD. CONVERSION

CPS ENERGY
P.O. BOX 1771
SAN ANTONIO, TX 78296

CEC
CIVIL ENGINEERING CONSULTANTS
SAN ANTONIO, TEXAS

BEXAR COUNTY
PUBLIC WORKS DIVISION

F.M. 2696 (BLANCO ROAD)
DUCTBANK
DETAILS

Planned: H.Snoga	Phone: 210-353-3764		SHEET 2 OF 2
Designed: JR	STATE	BEXAR COUNTY FILE NUMBER	PLAN SET NO.
Checked: GG	TEXAS		565
Drawn: PW	COUNTY		OF
Checked: JR	BEXAR		842

x:\data\bdat\projects\Ecps_blanco\utility\cpsdetails02.dgn
11/30/2007 2:40:01 PM

Contract Exhibit SKT-2

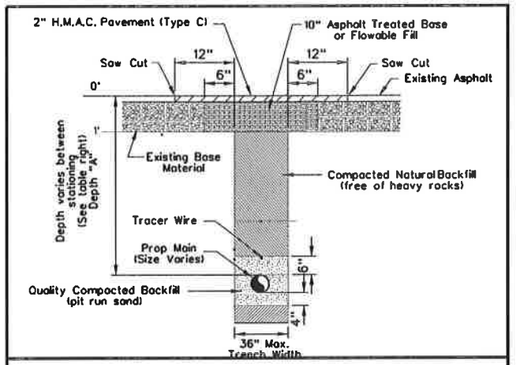

Trench & Backfill Detail
Under Pavement - General Condition

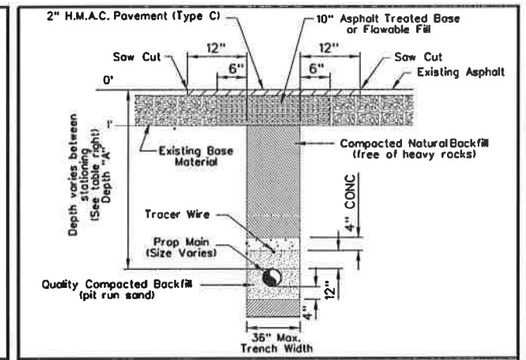

Trench & Backfill Detail
Under Pavement - Special Condition
FOR 24" MAIN ONLY

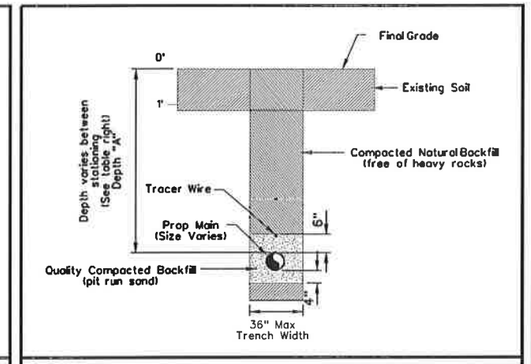

Trench & Backfill Detail
Earth Excavation Only

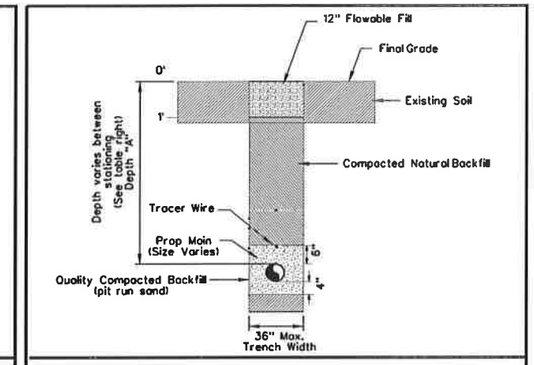

Trench & Backfill Detail
Earth Excavation < 10' from EOP

1. All proposed gas mains are to be installed at 5'-0" of cover from existing grade, unless otherwise indicated on the Location Data Tables, Depth A Table or as directed by the CPS Inspector or Field Representative. All proposed gas mains and services are to be installed at the elevations indicated on the Location Data Table.

2. All services labeled with a "R" are to be rerun from main to meter and services labeled with a "R1" are to be rerun from main to 1' inside the property line. From main to 1' inside the property line, the services are to be installed at the elevation indicated on the Location Data Table. For services labeled with a "T", the existing service is to be tied over to the new main and services labeled with an "A" are to be abandoned.

3. Gas main is to be abandoned in sections no longer than 300 feet. Each section is to be purged of gas with compressed air, then the ends are to be sealed with concrete. All abandoned services are to be plugged. All valve boxes on abandoned mains are to be removed.

4. The location of underground utilities indicated on the job sketch are taken from the best records available and are not guaranteed to be accurate. Foreman shall verify location and depth of all existing utilities, whether shown on the plans or not, and shall be responsible for the protection of existing utilities during construction.

5. 48 hours before excavating, notify One - Call at 1-800-545-6005. This number should notify all utilities of locates. For Emergency gas locates only - call 353-HELP.

6. All gas facilities will require proper connection for cathodic protection and locating purposes as indicated by CPS. Call Corrosion Control at 353-3237 prior to installing, adjusting, or abandoning gas lines and before connecting or disconnecting wires to any CPTLB.

7. All new polyethylene gas services and mains are to be joined by butt fusion. Compression couplings must not be used on new gas line construction. All New steel mains all to be welded.

8. TRENCH EXCAVATION PROTECTION: Contractor and/or Contractor's independently retained employee or structural design/geotechnical/safety/equipment consultant, if any, shall review these plans and any available geotechnical information and the anticipated installation site(s) in order to develop the Contractor's plans to implement the project described in the Contract Documents. The Contractor's plans shall provide for adequate trench safety systems that comply with, as a minimum, OSHA standards for trench safety consultant shall develop and implement a trench safety program in accordance with OSHA standards governing the presence and activities of individuals working in and around trench excavation.

Pressure Test
Department of Transportation
Section 192.507
Proposed M.A.O.P. 90 P.S.I.G.

Pipe Size: 6"
Test Medium: Nitrogen/Air
Minimum Test Pressure: 135 P.S.I.G.
Minimum Test Duration: 1 Hour
C.P.S. Required Duration: 2 Hours
Tested By: _____
Date Tested: _____

	Pressure	Ambient Temp	Pipe Temp
Start Test			
15 minutes			
30 minutes			
45 minutes			
60 minutes			
75 minutes			
90 minutes			
105 minutes			
End Test			

Pressure Test
Department of Transportation
Section 192.507
Proposed M.A.O.P. 931 P.S.I.G.

Pipe Size: 24"
Test Medium: Water
Minimum Test Pressure: 1397 P.S.I.G.
Minimum Test Duration: 8 Hours
C.P.S. Required Duration: 8 Hours
Tested By: _____
Date Tested: _____

Construction Points		Install		Abandon	
From	To	Pipe Size	Length	Pipe Size	Length
1	2	24	1314	24	1301
3	4	24	1335	24	1318
5	6	24	1532	24	1531
7	8	24	2845	24	2832
9	10	24	633	24	618
11	12	24	898	24	890
13	14	24	667	24	648
22	23	6PA	1448	6PA	1432
24	25	6PA	125	6PA	116
		8	93	8	13
26	27	6PA	15	6PA	10
28	29	6PA	118	6PA	102
		8	103	8	80
30	31	6PA	457	6PA	427
32	33	6PA	1046	6PA	1054
34	35	6PA	273	6PA	248
36	37	6PA	41	6PA	41
38	39	6PA	1183	6PA	1147
40	41	6PA	229	6PA	199
42	43	6PA	483	6PA	454
44	45	6PA	106	6PA	97
46	47	6PA	641	6PA	612
48	49	6PA	412	6PA	389
50	51				
	Total 24		9224		9138
	Total 8		196		93
	Total 6PA		6577		6328

NO.	REVISION	BY	DATE

STATE OF TEXAS
THOMAS C. BROWN
56076
LICENSED PROFESSIONAL ENGINEER

The seal appearing on this document was authorized by THOMAS C. BROWN P.E. 51076, on FEB 11, 2008.

2/11/08

Cobb Fendley & Associates
8628 N. NEW BRAUNFELS, SUITE 542
SAN ANTONIO, TEXAS 78217
(210) 826-4611

Approved by: Date Approved

Checked by: Date Approved

Map Quadrant	Project No.	Job No.
147 629	G-0309	3827521

cps ENERGY

CP&Y Chiang, Patel & Yerby, Inc.

BEXAR COUNTY
PUBLIC WORKS DIVISION

F.M. 2696 (BLANCO ROAD)
NATURAL GAS
GENERAL NOTES

SHEET 1 OF 3

Designed: DP	STATE	BEXAR COUNTY FILE NUMBER	PLAN SET NO.
Checked: MFS	TEXAS		566
Drawn: DC	COUNTY		OF
Checked: DP	BEXAR		842

C:\My Documents\Blanco Rd\Dgn\09014_UTIL_gn.dgn
9:14:30 AM
02/11/2008

Contract Exhibit SKT-2

Steel Mains Requirements

Pipeline Markers

Contractor to install pipeline markers at 1000' intervals (or as directed by CPS Energy inspector) along new steel mains in accordance with CPS Energy requirements. Final placement of markers subject to change based on CPS Energy inspector discretion and actual field conditions. Contractor to confirm adequate line of sight is maintained between markers prior to final placement.

AC Mitigation

¾" Zinc Ribbon to be installed under power lines along proposed 24" Steel from Station 14+90 to Station 20+00. Contractor to place 2" backfill above 24" Steel prior to installing zinc ribbon in trench.

Anodes

Contractor to place sacrificial anodes along proposed 24" Steel in accordance with CPS Energy requirements. See table (right) for proposed anode locations.

Hydrostatic Testing

Contractor to perform minimum 8 hour duration hydrostatic tests on all 24" steel mains in accordance with CPS Energy Operations and Maintenance Plan.

Radiographic Testing

Contractor to conduct radiographic testing of all 24" welds prior to completion of pipe installation in accordance with API Standard 1104. X-rays are subject to inspection and assessment by CPS Energy inspector.

Temperature Requirements--Shut-in Criteria

Contractor cannot plan or proceed with 24" shut-in if temperature is forecasted to drop below 20°F during shut-in operation.

Special Condition Backfill

Wherever special condition backfilling is required on the plans, Contractor will place 12 inches of sand backfill followed by 4 inches of concrete as directed in the trench sections. The purpose of this "concrete cap" is for added protection against third party damage; therefore, contractor is only required to pour 4 inches of concrete in the trench without the use of forms or reinforcement.

ALL STEEL MAIN REQUIREMENTS NOTED ABOVE ARE CONSIDERED INCIDENTAL TO THE STEEL MAIN INSTALLATION. CONTRACTOR WILL NOT BE PAID DIRECTLY FOR THESE ITEMS.

Contractor to install 1 - AGM 14# PKGD (Anode) on 24" Supply Pressure Line at the following locations (along Blanco Rd centerline):

12+00	33+00	57+76	99+04	128+16
16+90	37+65	81+79	104+79	146+10
21+50	47+56	87+70	116+56	150+50
28+32	52+66	93+29	122+37	

Final location subject to change at the discretion of CPS Energy Inspector

Polyethylene Mains

Contractor to install combination pipeline marker/CPTLB at 1500' intervals (or as directed by CPS Energy inspector) along Polyethylene mains in accordance with CPS Energy requirements. Final placement of marker/CPTLB is subject to change based on CPS Energy inspector discretion and actual field conditions. Contractor to confirm adequate line of sight is maintained between markers prior to final placement.

Steel Material Specifications	
Pipe:	24" x 0.375" WT Grade X-60
Fittings:	WHPY-60, 0.375" WT 3R Bends
Coating:	FBE 12-14 mil

NO.	REVISION	BY	DATE

STATE OF TEXAS — THOMAS C. BROWN — 51076 — LICENSED PROFESSIONAL ENGINEER

The seal appearing on this document was authorized by THOMAS C. BROWN P.E. 51076, on FEB 11, 2008.

2/11/08

Cobb Fendley & Associates

8620 N. NEW BRAUNFELS, SUITE 542
SAN ANTONIO, TEXAS 78217
(210) 826-4611

Approved by: Date Approved

Checked by: Date Approved

Map Quadrant	Project No.	Job No.
147 629	G-0309	3827521

CPS ENERGY

CP&Y Chiang, Patel & Yerby, Inc.

BEXAR COUNTY PUBLIC WORKS DIVISION

F.M. 2696 (BLANCO ROAD)
NATURAL GAS
GENERAL NOTES

SHEET 2 OF 3

Designed: DP	STATE	BEXAR COUNTY FILE NUMBER	PLAN SET NO.
Checked: MFS	TEXAS		566A
Drawn: DC	COUNTY		OF
Checked: DP	BEXAR		842

C:\My Documents\Blanco Rd\Dgn\09014_UTIL_gn2.dgn
02/12/2008 10:50:13 AM

Contractor must complete the following table for all polyethylene mains installed:

Contract Exhibit SKT-2

POINT SPAN	PIPE PRINT LINE DATA (EXAMPLE SHOWN)	
TO	" IPS DR	GAS PE3408/PE100 CEE ASTM D2513
TO	" IPS DR	GAS PE3408/PE100 CEE ASTM D2513
TO	" IPS DR	GAS PE3408/PE100 CEE ASTM D2513
TO	" IPS DR	GAS PE3408/PE100 CEE ASTM D2513
TO	" IPS DR	GAS PE3408/PE100 CEE ASTM D2513
TO	" IPS DR	GAS PE3408/PE100 CEE ASTM D2513
TO	" IPS DR	GAS PE3408/PE100 CEE ASTM D2513
TO	" IPS DR	GAS PE3408/PE100 CEE ASTM D2513
TO	" IPS DR	GAS PE3408/PE100 CEE ASTM D2513
TO	" IPS DR	GAS PE3408/PE100 CEE ASTM D2513
TO	" IPS DR	GAS PE3408/PE100 CEE ASTM D2513
TO	" IPS DR	GAS PE3408/PE100 CEE ASTM D2513
TO	" IPS DR	GAS PE3408/PE100 CEE ASTM D2513
TO	" IPS DR	GAS PE3408/PE100 CEE ASTM D2513
TO	" IPS DR	GAS PE3408/PE100 CEE ASTM D2513
TO	" IPS DR	GAS PE3408/PE100 CEE ASTM D2513
TO	" IPS DR	GAS PE3408/PE100 CEE ASTM D2513
TO	" IPS DR	GAS PE3408/PE100 CEE ASTM D2513
TO	" IPS DR	GAS PE3408/PE100 CEE ASTM D2513
TO	" IPS DR	GAS PE3408/PE100 CEE ASTM D2513
TO	" IPS DR	GAS PE3408/PE100 CEE ASTM D2513
TO	" IPS DR	GAS PE3408/PE100 CEE ASTM D2513
TO	" IPS DR	GAS PE3408/PE100 CEE ASTM D2513
TO	" IPS DR	GAS PE3408/PE100 CEE ASTM D2513
TO	" IPS DR	GAS PE3408/PE100 CEE ASTM D2513
TO	" IPS DR	GAS PE3408/PE100 CEE ASTM D2513
TO	" IPS DR	GAS PE3408/PE100 CEE ASTM D2513
TO	" IPS DR	GAS PE3408/PE100 CEE ASTM D2513
TO	" IPS DR	GAS PE3408/PE100 CEE ASTM D2513
TO	" IPS DR	GAS PE3408/PE100 CEE ASTM D2513
TO	" IPS DR	GAS PE3408/PE100 CEE ASTM D2513
TO	" IPS DR	GAS PE3408/PE100 CEE ASTM D2513

POINT SPAN	PIPE PRINT LINE DATA (EXAMPLE SHOWN)	
TO	" IPS DR	GAS PE3408/PE100 CEE ASTM D2513
TO	" IPS DR	GAS PE3408/PE100 CEE ASTM D2513
TO	" IPS DR	GAS PE3408/PE100 CEE ASTM D2513
TO	" IPS DR	GAS PE3408/PE100 CEE ASTM D2513
TO	" IPS DR	GAS PE3408/PE100 CEE ASTM D2513
TO	" IPS DR	GAS PE3408/PE100 CEE ASTM D2513
TO	" IPS DR	GAS PE3408/PE100 CEE ASTM D2513
TO	" IPS DR	GAS PE3408/PE100 CEE ASTM D2513
TO	" IPS DR	GAS PE3408/PE100 CEE ASTM D2513
TO	" IPS DR	GAS PE3408/PE100 CEE ASTM D2513
TO	" IPS DR	GAS PE3408/PE100 CEE ASTM D2513
TO	" IPS DR	GAS PE3408/PE100 CEE ASTM D2513
TO	" IPS DR	GAS PE3408/PE100 CEE ASTM D2513
TO	" IPS DR	GAS PE3408/PE100 CEE ASTM D2513
TO	" IPS DR	GAS PE3408/PE100 CEE ASTM D2513
TO	" IPS DR	GAS PE3408/PE100 CEE ASTM D2513
TO	" IPS DR	GAS PE3408/PE100 CEE ASTM D2513
TO	" IPS DR	GAS PE3408/PE100 CEE ASTM D2513
TO	" IPS DR	GAS PE3408/PE100 CEE ASTM D2513
TO	" IPS DR	GAS PE3408/PE100 CEE ASTM D2513
TO	" IPS DR	GAS PE3408/PE100 CEE ASTM D2513
TO	" IPS DR	GAS PE3408/PE100 CEE ASTM D2513
TO	" IPS DR	GAS PE3408/PE100 CEE ASTM D2513
TO	" IPS DR	GAS PE3408/PE100 CEE ASTM D2513
TO	" IPS DR	GAS PE3408/PE100 CEE ASTM D2513
TO	" IPS DR	GAS PE3408/PE100 CEE ASTM D2513
TO	" IPS DR	GAS PE3408/PE100 CEE ASTM D2513
TO	" IPS DR	GAS PE3408/PE100 CEE ASTM D2513
TO	" IPS DR	GAS PE3408/PE100 CEE ASTM D2513
TO	" IPS DR	GAS PE3408/PE100 CEE ASTM D2513
TO	" IPS DR	GAS PE3408/PE100 CEE ASTM D2513
TO	" IPS DR	GAS PE3408/PE100 CEE ASTM D2513

Example:

1 TO 2 | 2 " IPS DR 11 DRISCOPIPE 8100 GAS PE3408/PE100 CEE ASTM D2513 WT015 R NR 0356 A1-043 072706 COIL 0152

NO.	REVISION	BY	DATE

Cobb Fendley & Associates

8628 N. NEW BRAUNFELS, SUITE 542
SAN ANTONIO, TEXAS 78217
(210) 826-4611

Map Quadrant	Project No.	Job No.
147 629	G-0309	3827521

CPS ENERGY

CP&Y Chiang, Patel & Yerby, Inc.

BEXAR COUNTY
PUBLIC WORKS DIVISION

F.M. 2696 (BLANCO ROAD)
NATURAL GAS
GENERAL NOTES

SHEET 3 OF 3

Designed: DP	STATE	BEXAR COUNTY FILE NUMBER	PLAN SET NO.
Checked: MFS	TEXAS		566B
Drawn: DC	COUNTY		OF
Checked: DP	BEXAR		842

C:\My Documents\Blanco Rd\Dgn\09014_UTIL_gn3.dgn
02/11/2008 10:05:47 AM

Contract Exhibit SKT-2

Pipe Size	Begin Station	End Station	Depth (LF)
24	9+40	9+50	5.9
24	14+00	14+43	6.5
24	16+39	16+79	7.5
24	17+44	18+12	5.5
24	18+12	18+94	6.5
24	18+94	19+52	6
24	19+92	20+92	5.5
24	26+50	27+50	8
24	27+50	29+21	5.5
24	29+21	30+12	5.8
24	31+05	31+38	7.5
24	32+19	33+38	7.8
24	33+38	33+86	6.3
24	33+86	34+80	8
24	45+95	46+35	6
24	46+56	46+88	7.5
24	46+88	47+71	10.5
24	47+71	48+28	11.5
24	48+28	48+40	12
24	48+70	49+23	12.5
24	49+23	50+00	11.1
24	50+00	51+90	8.2
24	51+90	52+95	7.5
24	52+95	53+35	6.3
24	56+32	56+89	7.2
24	79+35	79+70	7
24	79+70	82+35	5.7
24	82+35	84+35	8.4
24	92+30	92+47	7.5
24	92+47	93+85	5.3
24	102+52	103+90	6.8
24	103+90	105+15	5.5
24	106+85	107+32	5.5
24	116+45	117+10	5.5
24	117+10	117+66	6
24	117+66	119+95	6.5
24	122+02	124+40	6
24	122+57	124+40	5.5
24	124+40	126+66	6.5
24	126+66	129+00	5.5
24	145+00	146+52	6
24	146+71	147+22	5.5
24	148+88	151+50	6

Pipe Size	Begin Station	End Station	Depth (LF)
6	17+62	17+79	5.3
6	35+79	36+72	5.5
6	47+72	49+23	6
6	49+46	50+08	8.5
6	50+08	51+08	6.5
6	51+61	52+15	6.3
6	52+48	53+08	7.5
6	53+56	54+20	6.1
6	77+74	79+22	5.5
6	101+08	101+31	6.4
6	128+27	129+75	11.8
6	145+35	147+13	7.7
6	179+97	187+00	7.6
6	187+00	188+52	11.5

NO	REVISION	BY	DATE

STATE OF TEXAS
MONICA F. SILVER
85589
LICENSED
PROFESSIONAL ENGINEER

The seal appearing on this document was authorized by MONICA F. SILVER P.E. 85589, on DEC 10, 2007.

Monica F Silver

Cobb Fendley & Associates
8620 N. NEW BRAUNFELS, SUITE 542
SAN ANTONIO, TEXAS 78217
(210) 826-4611

Approved by: Date Approved

Checked by: Date Approved

Map Quadrant	Project No.	Job No.
147 629	G-0309	3827521

CPS ENERGY

CP&Y Chiang, Patel & Yerby, Inc.

BEXAR COUNTY
PUBLIC WORKS DIVISION

F.M. 2696 (BLANCO ROAD)
NATURAL GAS
DEPTH A

SHEET 1 OF 1

Designed: DP	STATE	BEXAR COUNTY FILE NUMBER	PLAN SET NO.
Checked: MFS	TEXAS		567
Drawn: DC	COUNTY		S
Checked: DP	BEXAR		842

d:\cfo\2007\09014_fm2696_glade\austin\project\dgn\09014_UTIL_DEPTHA.dgn
12/10/2007 8:53:45 AM

Contract Exhibit SKT-2

CS4 Item #	Location			Grade Elevations			Gas Requirements		Planned Depth of Gas			Potential Conflicting Facility			Clearance	
	Address	Location # / Street Name	Station Marker	Existing Grade	Proposed Final Grade	Estimated Subgrade	Gas Pipe Size	Planned Gas T.O.P. Elevation	From Existing Grade	From Final Grade	From Estimated Subgrade	Proposed Facility Description	Top Elev	Btm Elev	Above Prop. Facility	Below Prop. Facility
		1A	9+35	1022.8	1022.8	1021.0	24	1015.0	7.8	7.8	6.0	24" RCP	1020.5	1018.0		3.0
		15	12+40	1012.8	1013.6	1011.8	24	1005.2	7.6	8.4	6.6	INLET CI-A2	1012.9	1008.2		3.0
		16	14+75	1004.7	1007.0	1005.2	24	995.5	9.2	11.5	9.7	HW TOE	1001.0	998.5		3.0
		17	31+43	997.8	995.5	993.7	24	986.9	10.9	8.6	6.8	30" RCP	993.0	989.9		3.0
		18	35+50	998.0	995.0	993.2	24	986.0	12.0	9.0	7.2	30" RCP	992.1	989.0		3.0
		19	46+50	1004.7	1003.4	1001.6	24	996.2	8.5	7.2	5.4	24" RCP	1001.7	999.2		3.0
		20	48+50	1014.1	1006.7	1004.9	24	1000.0	14.1	6.7	4.9	24" RCP	1005.5	1003.0		3.0
		21	54+22	999.5	999.1	997.3	24	993.5	6.0	5.6	3.8	HW TOE	999.0	996.5		3.0
		52	14+75	1002.0	1003.0	1001.2	6" P	998.5	3.5	4.5	2.7	RIP RAP	1001.0	1000.5		2.0
		53	16+55	1004.8	1004.8	1003.0	8	999.8	5.0	5.0	3.2	BLANCO	1005.0	1004.8		5.0
		54	24+53	990.9	994.8	993.0	6	982.0	8.9	12.8	11.0	5' X 3' BC	988.7	984.0		2.0
		55	32+84	998.5	995.5	993.7	8	986.9	11.6	8.6	6.8	3' X 3' BC	994.4	989.9		3.0
		56	45+49	1000.7	1000.9	999.1	6" P	994.2	6.5	6.7	4.9	36" RCP	1000.5	996.2		2.0
		57	61+06	1021.5	1022.4	1020.6	6" P	1017.0	4.5	5.4	3.6	24" RCP	1021.5	1019.0		2.0
		58	79+53	1054.8	1054.9	1053.1	6	1050.5	4.3	4.4	2.6	RIP RAP	1054.5	1052.5		2.0

NO.	REVISION	BY	DATE

STATE OF TEXAS
MONICA F. SILVER
85589
LICENSED
PROFESSIONAL ENGINEER

The seal appearing on this document was authorized by MONICA F. SILVER P.E. 85589, on DEC 10, 2007.

Monica F Silver

Cobb Fendley & Associates
8620 N. NEW BRAUNFELS, SUITE 542
SAN ANTONIO, TEXAS 78217
(210) 826-4611

Approved by: Date Approved

Checked by: Date Approved

Map Quadrant	Project No.	Job No.
147 629	G-0309	3827521

CPS ENERGY

CP&Y Chiang, Patel & Yerby, Inc.

BEXAR COUNTY
PUBLIC WORKS DIVISION

F.M. 2696 (BLANCO ROAD)
NATURAL GAS
LOCATION DATA TABLES

SHEET 1 OF 1

Designed: DP	STATE	BEXAR COUNTY FILE NUMBER	PLAN SET 568
Checked: MFS	TEXAS		
Drawn: DC	COUNTY		OF
Checked: DP	BEXAR		842

d:\cfa\2007\09014_fm2696_goode\satn\project\dgn\09014_UTIL_LDT.dgn
12/10/2007 8:53:47 AM

Contract Exhibit SKT-2

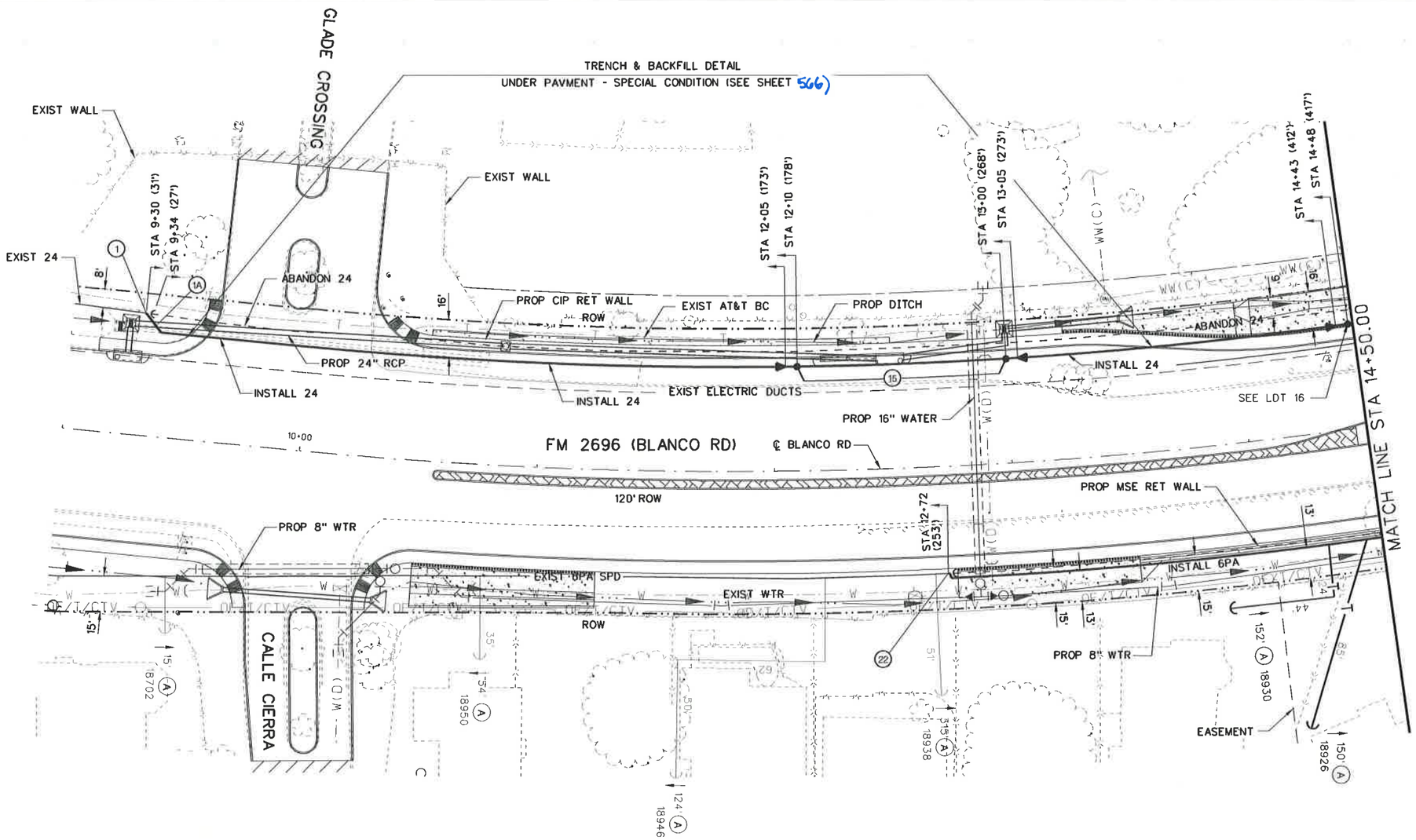

25 12.5 0 25 50
SCALE FEET

1. ALL PROPOSED GAS MAINS AND SERVICES ARE TO BE INSTALLED AT THE PLANNED GAS TOP OF PIPE ELEVATION INDICATED ON THE LOCATION DATA TABLE.
2. CONTRACTOR TO VERIFY EXISTING FACILITY LOCATIONS PRIOR TO CONSTRUCTION.
3. DIMENSIONS TO CROSS STREETS ARE MEASURED TO EXISTING EDGE OF PAVEMENT. CONTRACTOR TO NOTE DISTANCE TO CROSS STREET ROW IN CPS ENERGY AS BUILT.

NO.	REVISION	BY	DATE

STATE OF TEXAS
MONICA F. SILVER
85589
LICENSED PROFESSIONAL ENGINEER

The seal appearing on this document was authorized by MONICA F. SILVER P.E. 85589, on DEC 10, 2007.

Monica F. Silver

Cobb Fendley & Associates
8620 N. NEW BRAUNFELS, SUITE 542
SAN ANTONIO, TEXAS 78217
(210) 826-4611

Approved by: Date Approved

Checked by: Date Approved

Map Quadrant	Project No.	Job No.
154-648	G-0309	3827521

cps ENERGY

CP&Y Chiang, Patel & Yerby, Inc.

BEXAR COUNTY
PUBLIC WORKS DIVISION

F.M. 2696 (BLANCO ROAD)
NATURAL GAS
RELOCATION PLAN

BEGIN PROJECT TO STA 14+50.00

SHEET 1 OF 29

Designed: DP	STATE	BEXAR COUNTY FILE NUMBER	PLAN SET NO.
Checked: MFS	TEXAS		509
Drawn: DC	COUNTY		
Checked: DP	BEXAR		842

D:\CFA\2007\09014.fm2696_glade\USTN\project\Dgn\09014_UTIL_pp01.dgn
12/10/2007 8:01:08 AM

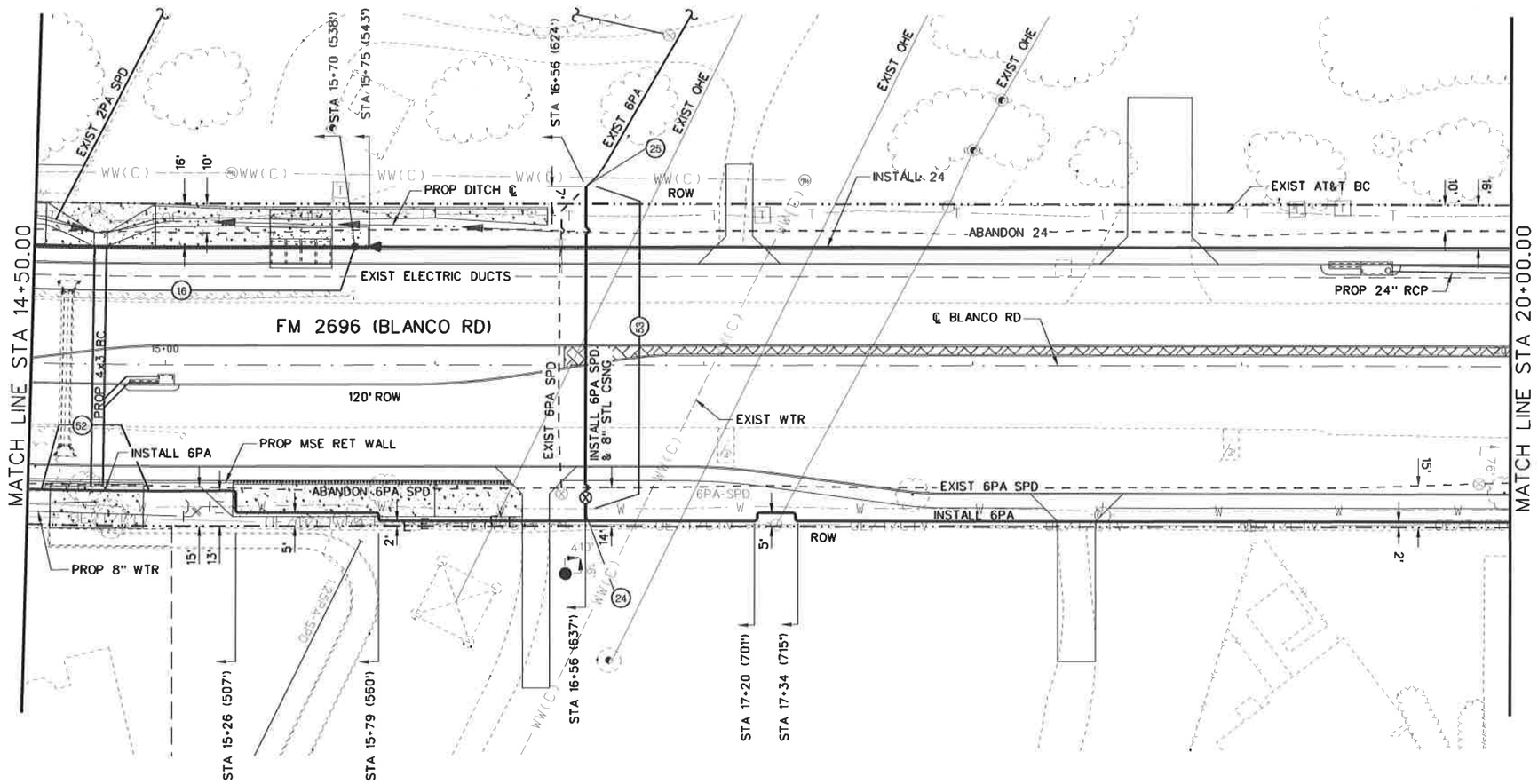

Contract Exhibit SKT-2

25 12.5 0 25 50
SCALE FEET

1. ALL PROPOSED GAS MAINS AND SERVICES ARE TO BE INSTALLED AT THE PLANNED GAS TOP OF PIPE ELEVATION INDICATED ON THE LOCATION DATA TABLE.
2. CONTRACTOR TO VERIFY EXISTING FACILITY LOCATIONS PRIOR TO CONSTRUCTION.
3. DIMENSIONS TO CROSS STREETS ARE MEASURED TO EXISTING EDGE OF PAVEMENT. CONTRACTOR TO NOTE DISTANCE TO CROSS STREET ROW IN CPS ENERGY AS BUILT.

NO	REVISION	BY	DATE

STATE OF TEXAS
MONICA F. SILVER
85589
LICENSED PROFESSIONAL ENGINEER

The seal appearing on this document was authorized by MONICA F. SILVER P.E. 85589, on DEC 10, 2007.

Monica F Silver

Cobb Fendley & Associates
8620 N. NEW BRAUNFELS, SUITE 542
SAN ANTONIO, TEXAS 78217
(210) 826-4611

Approved by: Date Approved

Checked by: Date Approved

Map Quadrant	Project No.	Job No.
154-648	G-0309	3827521

CPS ENERGY

CP&Y Chiang, Patel & Yerby, Inc.

BEXAR COUNTY
PUBLIC WORKS DIVISION

F.M. 2696 (BLANCO ROAD)
NATURAL GAS
RELOCATION PLAN
STA 14+50.00 TO STA 20+00.00

SHEET 2 OF 29

Designed: DP	STATE	BEXAR COUNTY FILE NUMBER	PLAN SET NO.
Checked: MFS	TEXAS		570
Drawn: DC	COUNTY		Or
Checked: DP	BEXAR		842

d:\cfa\2007\09014_fm2696_glade\satn\project\dgn\09014_UTIL_pp02.dgn
12/10/2007 8:51:39 AM

Contract Exhibit SKT-2

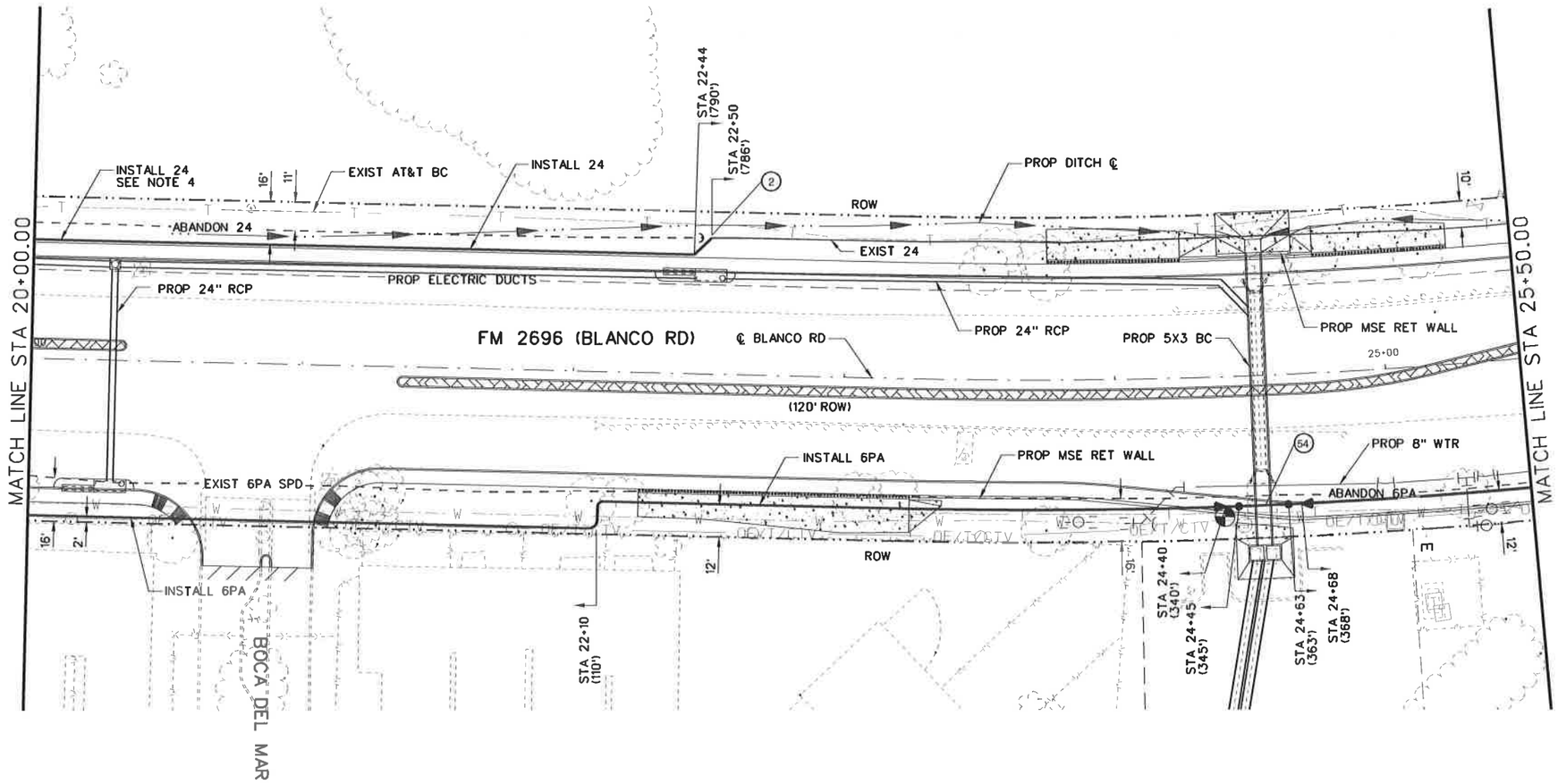

25 12.5 0 25 50
SCALE FEET

1. ALL PROPOSED GAS MAINS AND SERVICES ARE TO BE INSTALLED AT THE PLANNED GAS TOP OF PIPE ELEVATION INDICATED ON THE LOCATION DATA TABLE.
2. CONTRACTOR TO VERIFY EXISTING FACILITY LOCATIONS PRIOR TO CONSTRUCTION.
3. DIMENSIONS TO CROSS STREETS ARE MEASURED TO EXISTING EDGE OF PAVEMENT. CONTRACTOR TO NOTE DISTANCE TO CROSS STREET ROW IN CPS ENERGY AS BUILT.

NO.	REVISION	BY	DATE

STATE OF TEXAS
MONICA F. SILVER
85589
LICENSED PROFESSIONAL ENGINEER

The seal appearing on this document was authorized by MONICA F. SILVER P.E. 85589, on DEC 10, 2007.

Monica F Silver

Cobb Fendley & Associates
8620 N. NEW BRAUNFELS, SUITE 542
SAN ANTONIO, TEXAS 78217
(210) 826-4611

Approved by: Date Approved

Checked by: Date Approved

Map Quadrant	Project No.	Job No.
154-648	G-0309	3827521

CPS ENERGY

CP&Y Chiang, Patel & Yerby, Inc.

BEXAR COUNTY
PUBLIC WORKS DIVISION

F.M. 2696 (BLANCO ROAD)
NATURAL GAS
RELOCATION PLAN

STA 20+00.00 TO STA 25+50.00

SHEET 3 OF 29

Designed: DP	STATE	BEXAR COUNTY FILE NUMBER	PLAN SET NO.
Checked: MFS	TEXAS		571
Drawn: DC	COUNTY		
Checked: DP	BEXAR		842

d:\cfi\2007\09014_fm2696_glade\astn\project\dgn\09014_UTIL_pg03.dgn
12/10/2007 8:51:44 AM

Contract Exhibit SKT-2

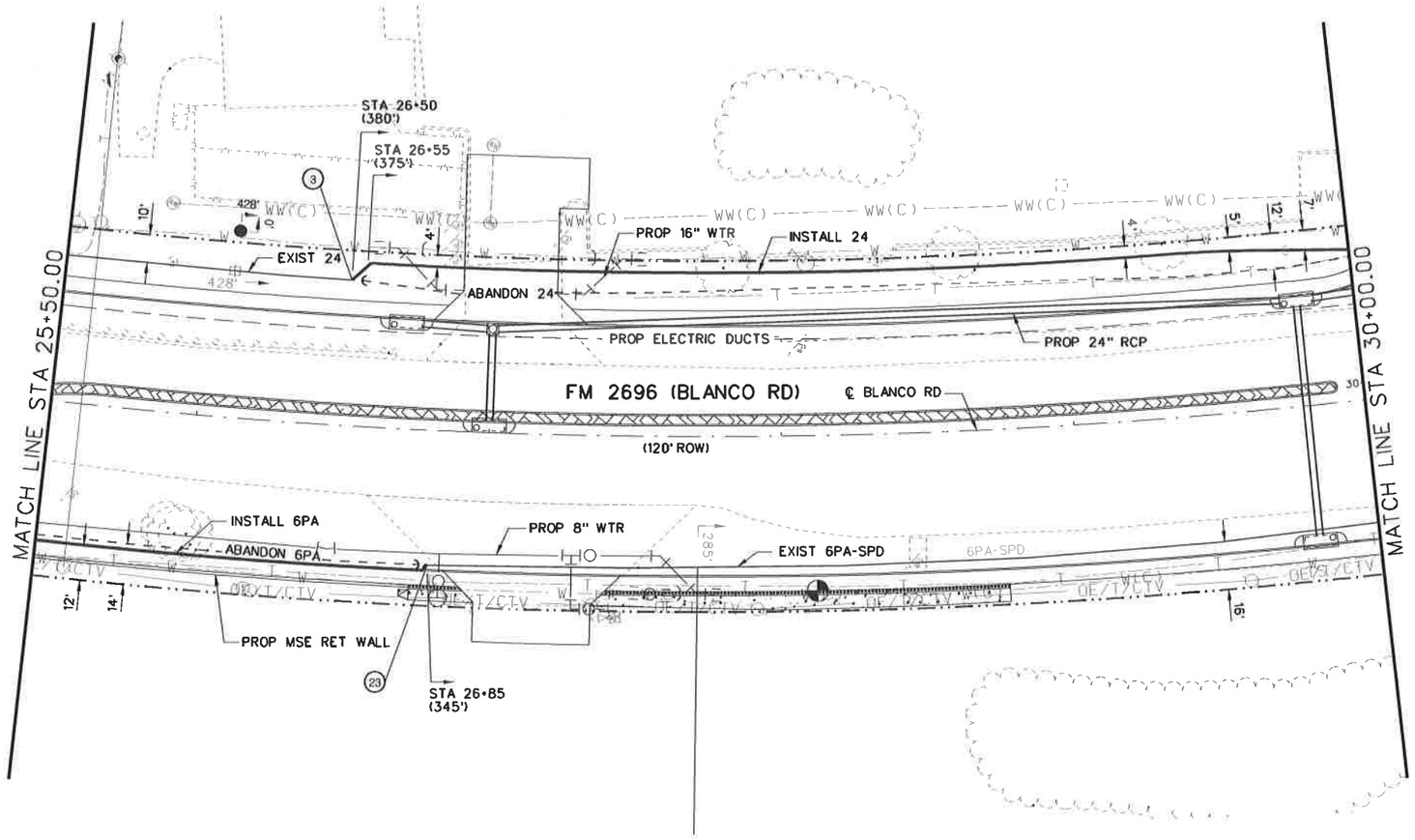

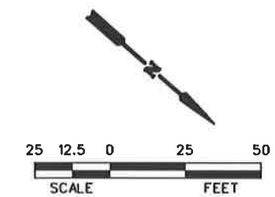

1. ALL PROPOSED GAS MAINS AND SERVICES ARE TO BE INSTALLED AT THE PLANNED GAS TOP OF PIPE ELEVATION INDICATED ON THE LOCATION DATA TABLE.
2. CONTRACTOR TO VERIFY EXISTING FACILITY LOCATIONS PRIOR TO CONSTRUCTION.
3. DIMENSIONS TO CROSS STREETS ARE MEASURED TO EXISTING EDGE OF PAVEMENT. CONTRACTOR TO NOTE DISTANCE TO CROSS STREET ROW IN CPS ENERGY AS BUILT.

NO	REVISION	BY	DATE

STATE OF TEXAS
MONICA F. SILVER
85589
LICENSED
PROFESSIONAL ENGINEER

The seal appearing on this document was authorized by MONICA F. SILVER P.E. 85589, on DEC 10, 2007.

Monica F Silver

Cobb Fendley & Associates
8620 N. NEW BRAUNFELS, SUITE 542
SAN ANTONIO, TEXAS 78217
(210) 826-4611

Approved by: Date Approved

Checked by: Date Approved

Map Quadrant	Project No.	Job No.
154-654	G-0309	3827521

CPS ENERGY

CP&Y Chiang, Patel & Yerby, Inc.

BEXAR COUNTY
PUBLIC WORKS DIVISION

F.M. 2696 (BLANCO ROAD)
NATURAL GAS
RELOCATION PLAN

STA 25+50.00 TO STA 30+00.00

SHEET 4 OF 29

Designed: DP	STATE	BEXAR COUNTY FILE NUMBER	PLAN SET NO.
Checked: MFS	TEXAS		572
Drawn: DC	COUNTY		
Checked: DP	BEXAR		842

d:\cfo\2007\09014_fm2696_glade\austin\project\dgn\09014_UTIL_pp04.dgn
12/10/2007 8:51:49 AM

TRENCH & BACKFILL DETAIL
UNDER PAVMENT - SPECIAL CONDITION (SEE SHEET 566)

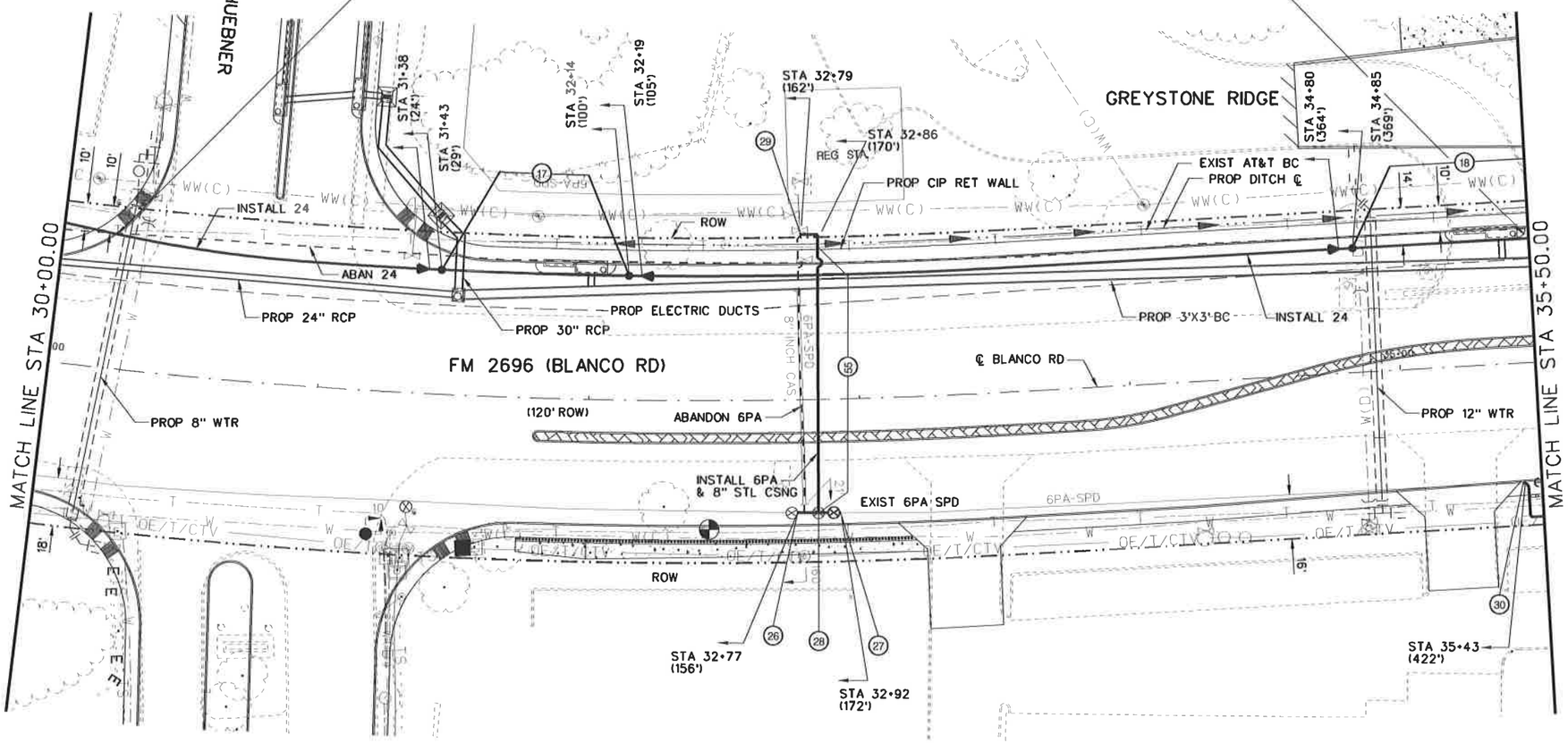

Contract Exhibit SKT-2

25 12.5 0 25 50
SCALE FEET

1. ALL PROPOSED GAS MAINS AND SERVICES ARE TO BE INSTALLED AT THE PLANNED GAS TOP OF PIPE ELEVATION INDICATED ON THE LOCATION DATA TABLE.
2. CONTRACTOR TO VERIFY EXISTING FACILITY LOCATIONS PRIOR TO CONSTRUCTION.
3. DIMENSIONS TO CROSS STREETS ARE MEASURED TO EXISTING EDGE OF PAVEMENT. CONTRACTOR TO NOTE DISTANCE TO CROSS STREET ROW IN CPS ENERGY AS BUILT.

NO.	REVISION	BY	DATE

STATE OF TEXAS — MONICA F. SILVER — 85589 — LICENSED PROFESSIONAL ENGINEER

The seal appearing on this document was authorized by MONICA F. SILVER P.E. 85589, on DEC 10, 2007.

Monica F Silver

Cobb Fendley & Associates
8620 N. NEW BRAUNFELS, SUITE 542
SAN ANTONIO, TEXAS 78217
(210) 826-4611

Approved by: Date Approved

Checked by: Date Approved

Map Quadrant	Project No.	Job No.
154-654	G-0309	3827521

CPS ENERGY

CP&Y Chiang, Patel & Yerby, Inc.

BEXAR COUNTY PUBLIC WORKS DIVISION

F.M. 2696 (BLANCO ROAD)
NATURAL GAS
RELOCATION PLAN
STA 30+00.00 TO STA 35+50.00

SHEET 5 OF 29

Designed: DP	STATE	BEXAR COUNTY FILE NUMBER	PLAN SET NO.
Checked: MFS	TEXAS		573
Drawn: DC	COUNTY		or
Checked: DP	BEXAR		842

d:\cfb\2007\09014.fm2696_glade\usth\project\dgn\09014_UTIL_pp05.dgn
12/10/2007 8:51:53 AM

Contract Exhibit SKT-2

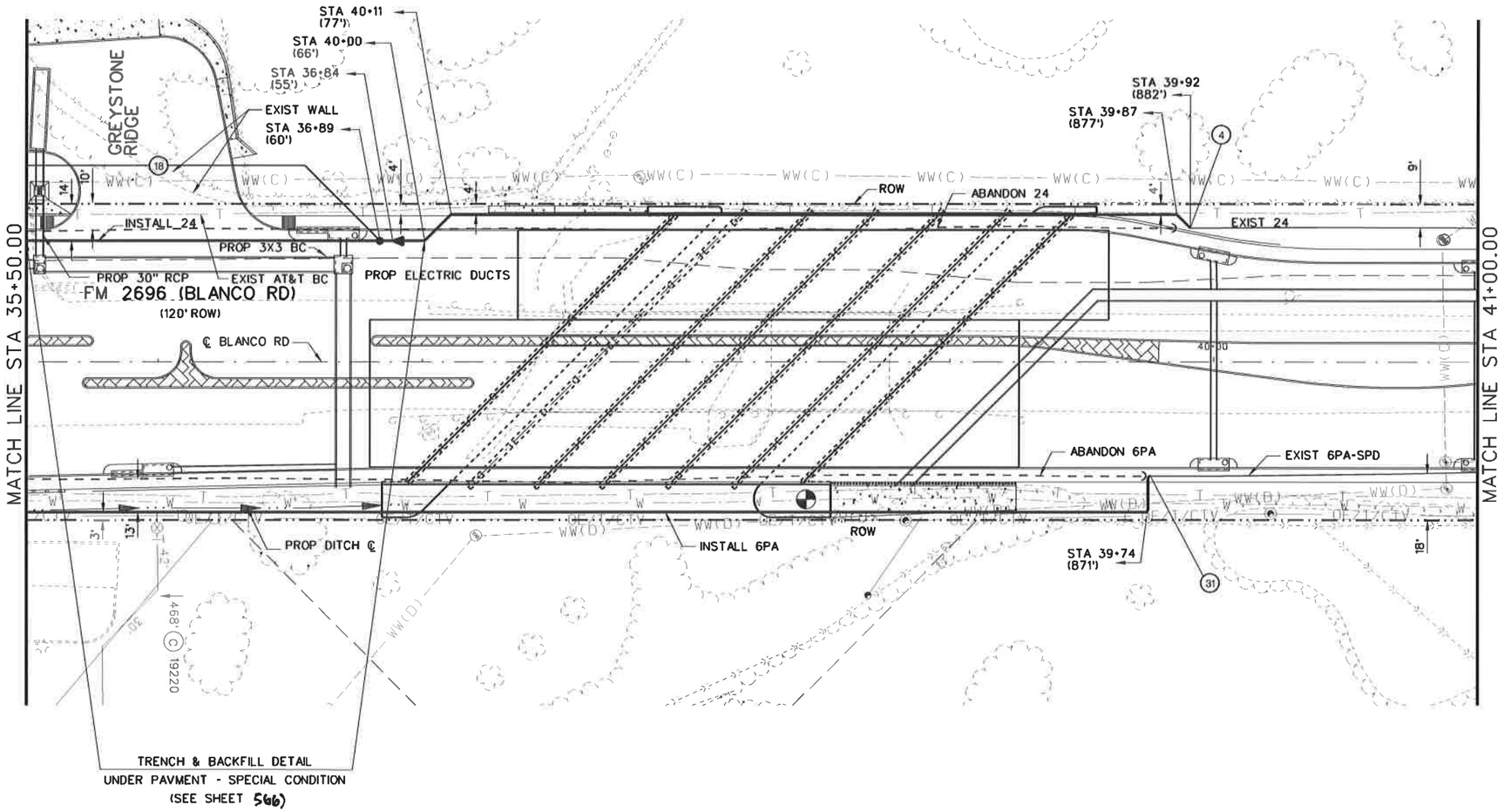

25 12.5 0 25 50
SCALE FEET

1. ALL PROPOSED GAS MAINS AND SERVICES ARE TO BE INSTALLED AT THE PLANNED GAS TOP OF PIPE ELEVATION INDICATED ON THE LOCATION DATA TABLE.
2. CONTRACTOR TO VERIFY EXISTING FACILITY LOCATIONS PRIOR TO CONSTRUCTION.
3. DIMENSIONS TO CROSS STREETS ARE MEASURED TO EXISTING EDGE OF PAVEMENT. CONTRACTOR TO NOTE DISTANCE TO CROSS STREET ROW IN CPS ENERGY AS BUILT.
4. CONTRACTOR TO CONFIRM DEACTIVATION OF EXISTING AT&T FACILITIES IS COMPLETE PRIOR TO ANY 24" CPS GAS CONSTRUCTION IN BRIDGE AREA.

NO.	REVISION	BY	DATE

STATE OF TEXAS
MONICA F. SILVER
85589
LICENSED PROFESSIONAL ENGINEER

The seal appearing on this document was authorized by MONICA F. SILVER P.E. 85589, on DEC 10, 2007.

Monica F Silver

Cobb Fendley & Associates
8620 N. NEW BRAUNFELS, SUITE 542
SAN ANTONIO, TEXAS 78217
(210) 826-4611

Approved by: Date Approved

Checked by: Date Approved

Map Quadrant	Project No.	Job No.
157-620	G-0309	3827521

CPS ENERGY

CP&Y Chiang, Patel & Yerby, Inc.

BEXAR COUNTY
PUBLIC WORKS DIVISION

F.M. 2696 (BLANCO ROAD)
NATURAL GAS
RELOCATION PLAN
STA 35+50.00 TO STA 41+00.00

SHEET 6 OF 29

Designed: DP	STATE	BEXAR COUNTY FILE NUMBER	PLAN SET NO.
Checked: MFS	TEXAS		574
Drawn: DC	COUNTY		OF
Checked: DP	BEXAR		842

d:\cfo\2007\09014.fm2696_globe\austn\project\dgn\09014_UTIL_pp06.dgn
12/10/2007 8:51:58 AM

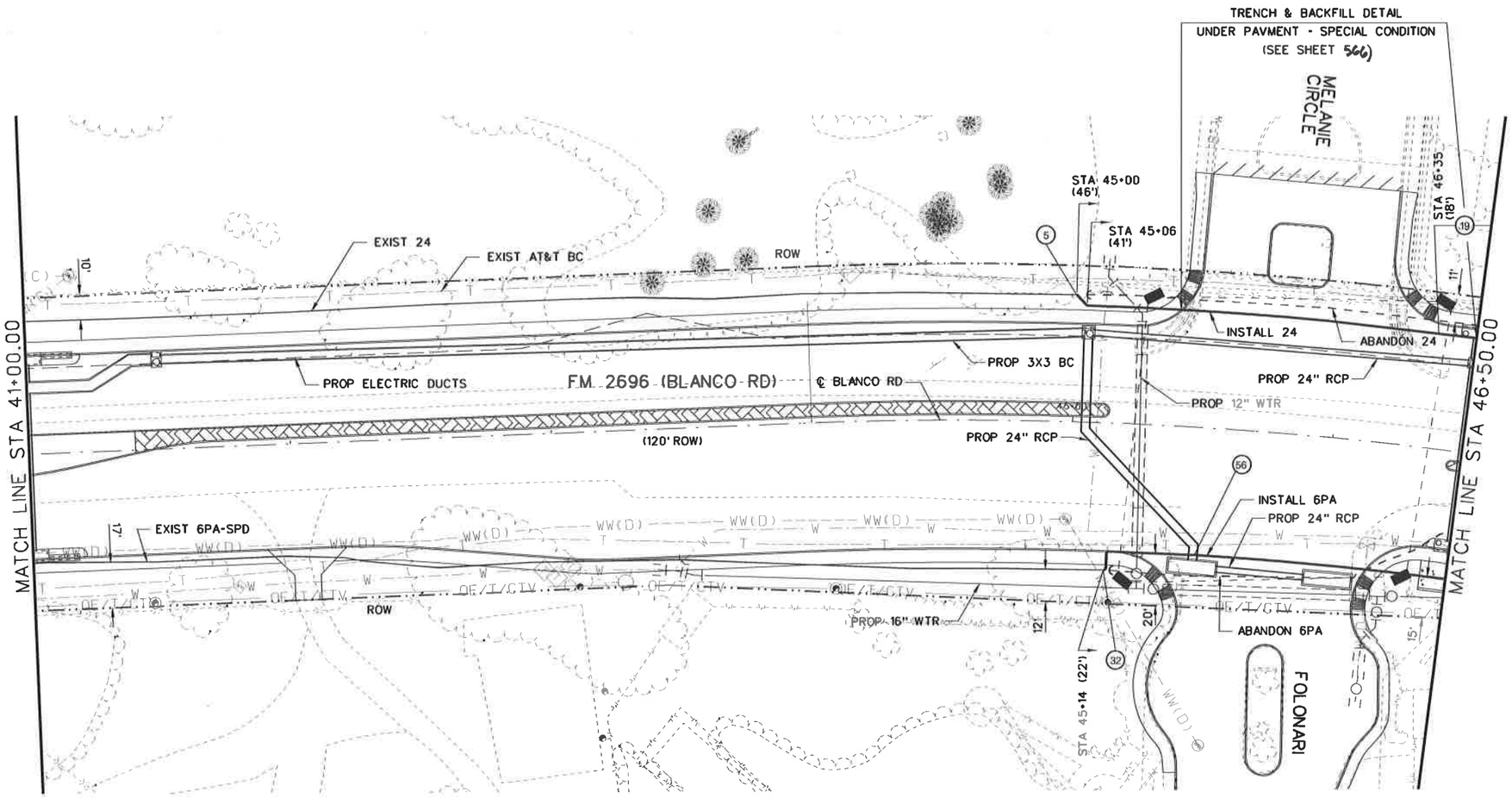

Contract Exhibit SKT-2

25 12.5 0 25 50
SCALE FEET

1. ALL PROPOSED GAS MAINS AND SERVICES ARE TO BE INSTALLED AT THE PLANNED GAS TOP OF PIPE ELEVATION INDICATED ON THE LOCATION DATA TABLE.
2. CONTRACTOR TO VERIFY EXISTING FACILITY LOCATIONS PRIOR TO CONSTRUCTION.
3. DIMENSIONS TO CROSS STREETS ARE MEASURED TO EXISTING EDGE OF PAVEMENT. CONTRACTOR TO NOTE DISTANCE TO CROSS STREET ROW IN CPS ENERGY AS BUILT.

NO.	REVISION	BY	DATE

STATE OF TEXAS
MONICA F. SILVER
85589
LICENSED PROFESSIONAL ENGINEER

The seal appearing on this document was authorized by MONICA F. SILVER P.E. 85589, on DEC 10, 2007.

Monica F Silver

Cobb Fendley & Associates
8620 N. NEW BRAUNFELS, SUITE 542
SAN ANTONIO, TEXAS 78217
(210) 826-4611

Approved by: Date Approved

Checked by: Date Approved

Map Quadrant	Project No.	Job No.
154-654	G-0309	3827521

CPS ENERGY

CP&Y Chiang, Patel & Yerby, Inc.

BEXAR COUNTY
PUBLIC WORKS DIVISION

F.M. 2696 (BLANCO ROAD)
NATURAL GAS
RELOCATION PLAN
STA 41+00.00 TO STA 46+50.00

SHEET 7 OF 29

Designed: DP	STATE	BEXAR COUNTY FILE NUMBER	PLAN SET NO.
Checked: MFS	TEXAS		575
Drawn: DC	COUNTY		-
Checked: DP	BEXAR		842

d:\cfg\2007\09014.fm2696_gtade\austin\project\dgn\09014_UTIL_pp07.dgn
12/10/2007 8:52:02 AM

Contract Exhibit SKT-2

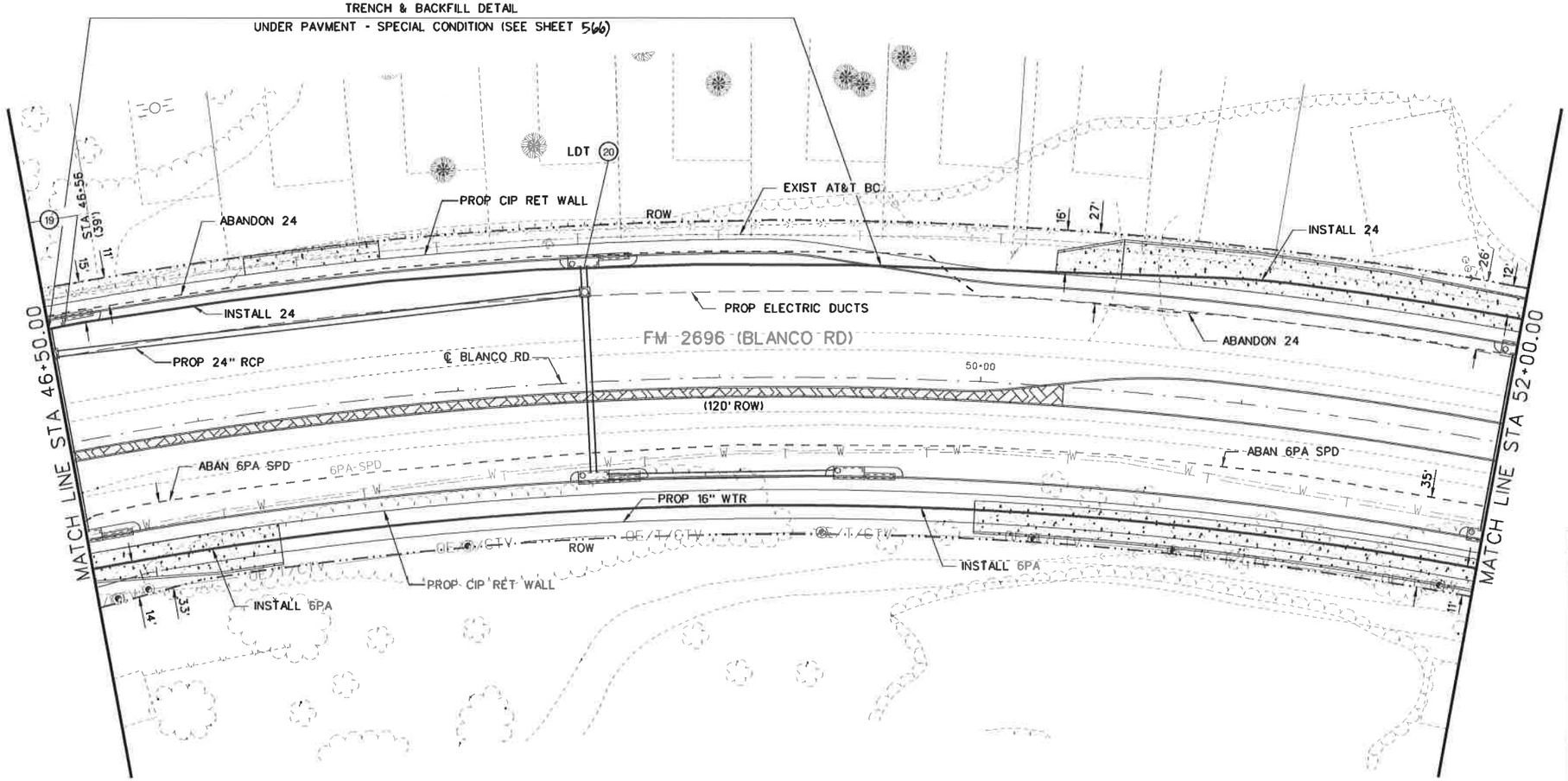

25 12.5 0 25 50
SCALE FEET

1. ALL PROPOSED GAS MAINS AND SERVICES ARE TO BE INSTALLED AT THE PLANNED GAS TOP OF PIPE ELEVATION INDICATED ON THE LOCATION DATA TABLE.
2. CONTRACTOR TO VERIFY EXISTING FACILITY LOCATIONS PRIOR TO CONSTRUCTION.
3. DIMENSIONS TO CROSS STREETS ARE MEASURED TO EXISTING EDGE OF PAVEMENT. CONTRACTOR TO NOTE DISTANCE TO CROSS STREET ROW IN CPS ENERGY AS BUILT.

NO.	REVISION	BY	DATE

STATE OF TEXAS
MONICA F. SILVER
85589
LICENSED PROFESSIONAL ENGINEER

The seal appearing on this document was authorized by MONICA F. SILVER P.E. 85589, on DEC 10, 2007.

Monica F Silver

Cobb Fendley & Associates
8620 N. NEW BRAUNFELS, SUITE 542
SAN ANTONIO, TEXAS 78217
(210) 826-4611

Approved by: Date Approved

Checked by: Date Approved

Map Quadrant	Project No.	Job No.
154-654	G-0309	3827521

cps ENERGY

CP&Y Chiang, Patel & Yerby, Inc.

BEXAR COUNTY
PUBLIC WORKS DIVISION

F.M. 2696 (BLANCO ROAD)
NATURAL GAS
RELOCATION PLAN
STA 46+50.00 TO STA 52+00.00

SHEET 8 OF 29

Designed: DP	STATE	BEXAR COUNTY FILE NUMBER	PLAN SET NO.
Checked: MFS	TEXAS		576
Drawn: DC	COUNTY		
Checked: DP	BEXAR		842

d:\cfa\2007\09014.fm2696_glade\ustn\project\dgn\09014_UTIL_pp08.dgn
12/10/2007 8:52:07 AM

Contract Exhibit SKT-2

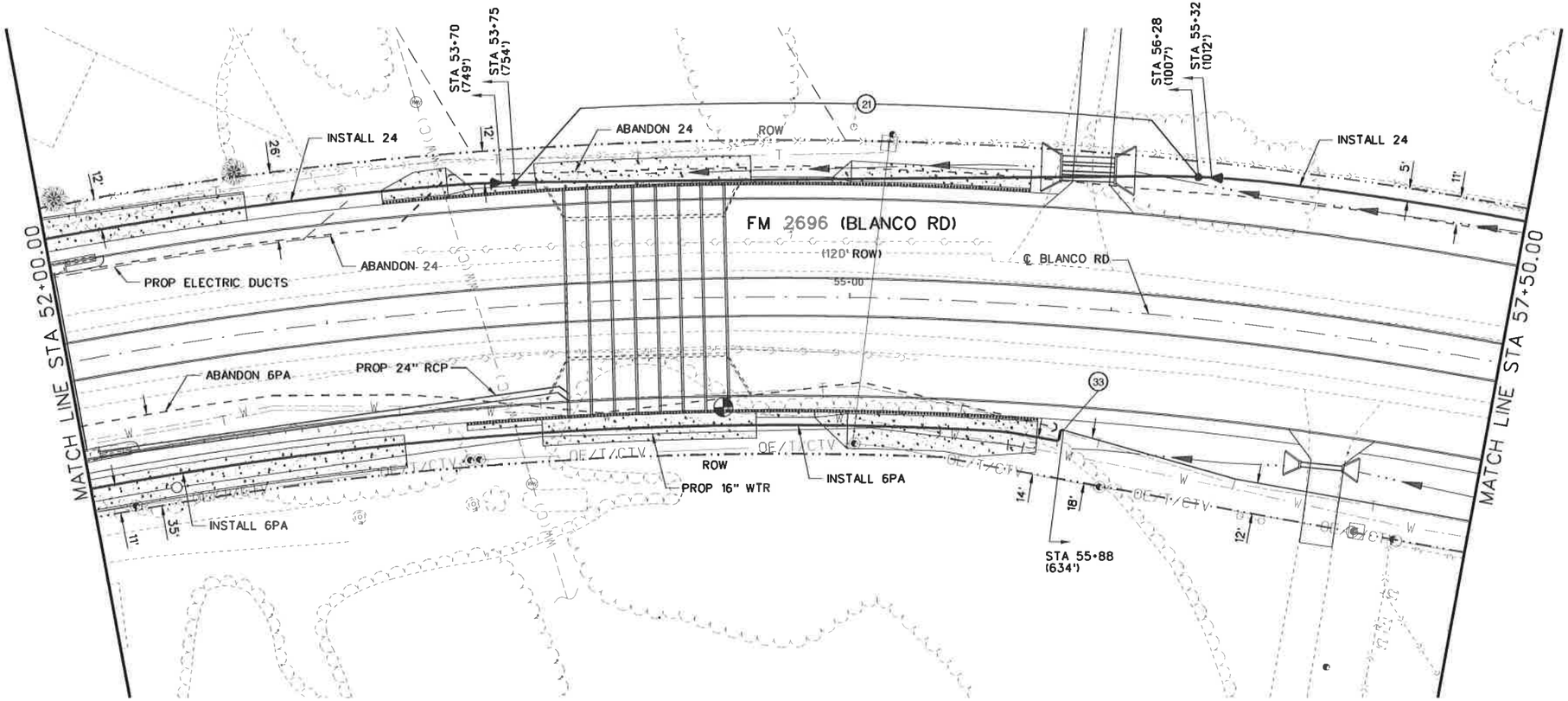

SCALE 25 12.5 0 25 50 FEET

1. ALL PROPOSED GAS MAINS AND SERVICES ARE TO BE INSTALLED AT THE PLANNED GAS TOP OF PIPE ELEVATION INDICATED ON THE LOCATION DATA TABLE.
2. CONTRACTOR TO VERIFY EXISTING FACILITY LOCATIONS PRIOR TO CONSTRUCTION.
3. DIMENSIONS TO CROSS STREETS ARE MEASURED TO EXISTING EDGE OF PAVEMENT. CONTRACTOR TO NOTE DISTANCE TO CROSS STREET ROW IN CPS ENERGY AS BUILT.

NO.	REVISION	BY	DATE

STATE OF TEXAS — MONICA F. SILVER — 85589 — LICENSED PROFESSIONAL ENGINEER

The seal appearing on this document was authorized by MONICA F. SILVER P.E. 85589, on DEC 10, 2007.

Monica F. Silver

Cobb Fendley & Associates
8620 N. NEW BRAUNFELS, SUITE 542
SAN ANTONIO, TEXAS 78217
(210) 826-4611

Approved by: Date Approved

Checked by: Date Approved

Map Quadrant	Project No.	Job No.
152-652	G-0309	3827521

CPS ENERGY

CP&Y Chiang, Patel & Yerby, Inc.

BEXAR COUNTY PUBLIC WORKS DIVISION

F.M. 2696 (BLANCO ROAD)
NATURAL GAS
RELOCATION PLAN
STA 52+00.00 TO STA 57+50.00

SHEET 9 OF 29

Designed: DP	STATE	BEXAR COUNTY FILE NUMBER	PLAN SET NO. 577
Checked: MFS	TEXAS		
Drawn: DC	COUNTY		OF
Checked: DP	BEXAR		842

d:\cfo\2007\09014.fm2696_glade\astin\project\dgn\09014_UTIL_pp09.dgn
12/10/2007 8:52:12 AM

Contract Exhibit SKT-2

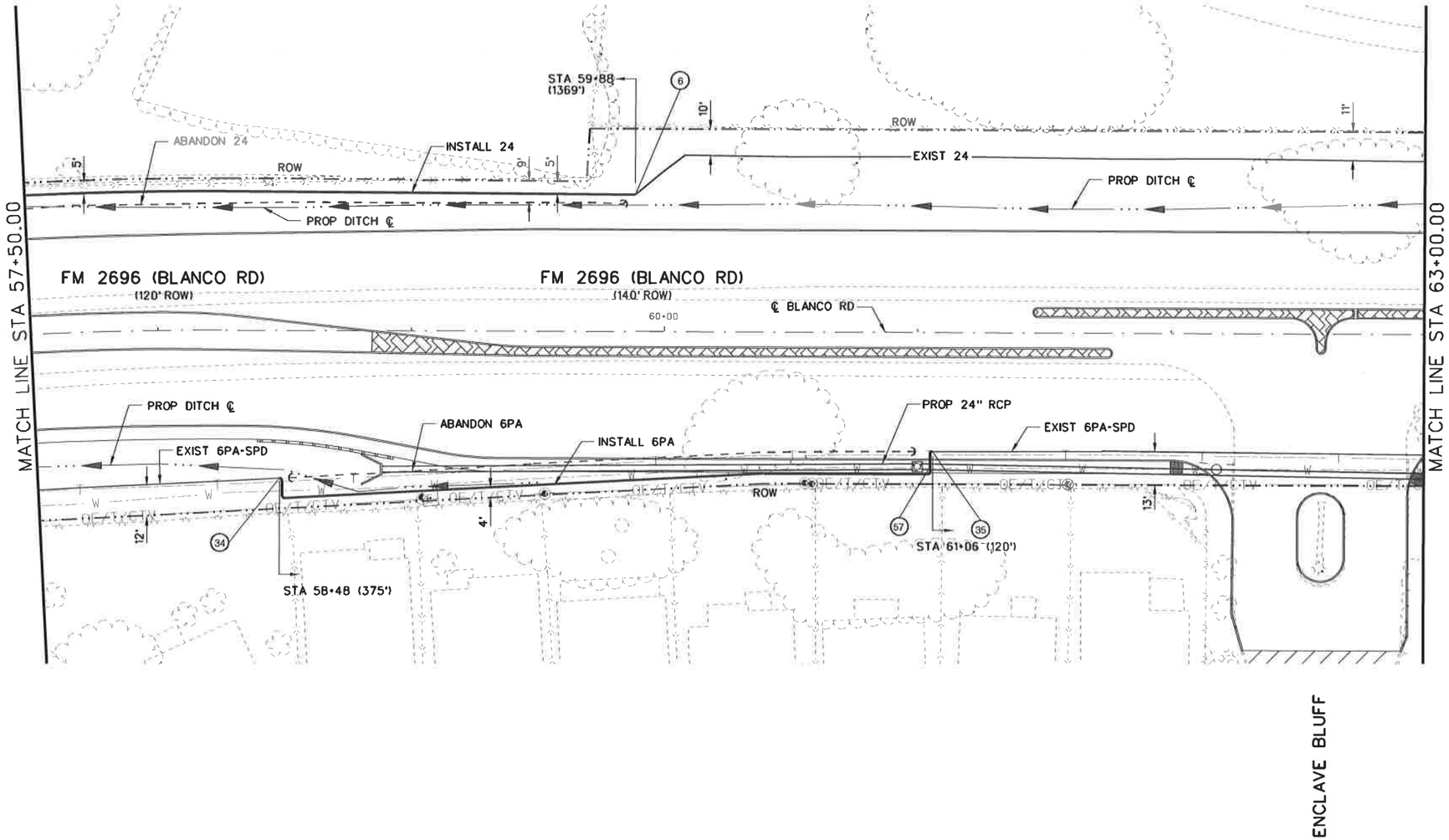

25 12.5 0 25 50
SCALE FEET

1. ALL PROPOSED GAS MAINS AND SERVICES ARE TO BE INSTALLED AT THE PLANNED GAS TOP OF PIPE ELEVATION INDICATED ON THE LOCATION DATA TABLE.
2. CONTRACTOR TO VERIFY EXISTING FACILITY LOCATIONS PRIOR TO CONSTRUCTION.
3. DIMENSIONS TO CROSS STREETS ARE MEASURED TO EXISTING EDGE OF PAVEMENT. CONTRACTOR TO NOTE DISTANCE TO CROSS STREET ROW IN CPS ENERGY AS BUILT.

NO.	REVISION	BY	DATE

STATE OF TEXAS
MONICA F. SILVER
85589
LICENSED PROFESSIONAL ENGINEER

The seal appearing on this document was authorized by MONICA F. SILVER P.E. 85589, on DEC 10, 2007.

Monica F Silver

Cobb Fendley & Associates
8620 N. NEW BRAUNFELS, SUITE 542
SAN ANTONIO, TEXAS 78217
(210) 826-4611

Approved by: Date Approved

Checked by: Date Approved

Map Quadrant	Project No.	Job No.
152-652	G-0309	3827521

CPS ENERGY

CP&Y Chiang, Patel & Yerby, Inc.

BEXAR COUNTY
PUBLIC WORKS DIVISION

F.M. 2696 (BLANCO ROAD)
NATURAL GAS
RELOCATION PLAN
STA 57+50.00 TO STA 63+00.00

SHEET 10 OF 29

Designed: DP	STATE	BEXAR COUNTY FILE NUMBER	PLAN SET NO.
Checked: MFS	TEXAS		578
Drawn: DC	COUNTY		
Checked: DP	BEXAR		842

d:\cfa\2007\09014_fm2696_glade\ustn\project\dgn\09014_UTIL_pp10.dgn
12/10/2007 8:52:17 AM

Contract Exhibit SKT-2

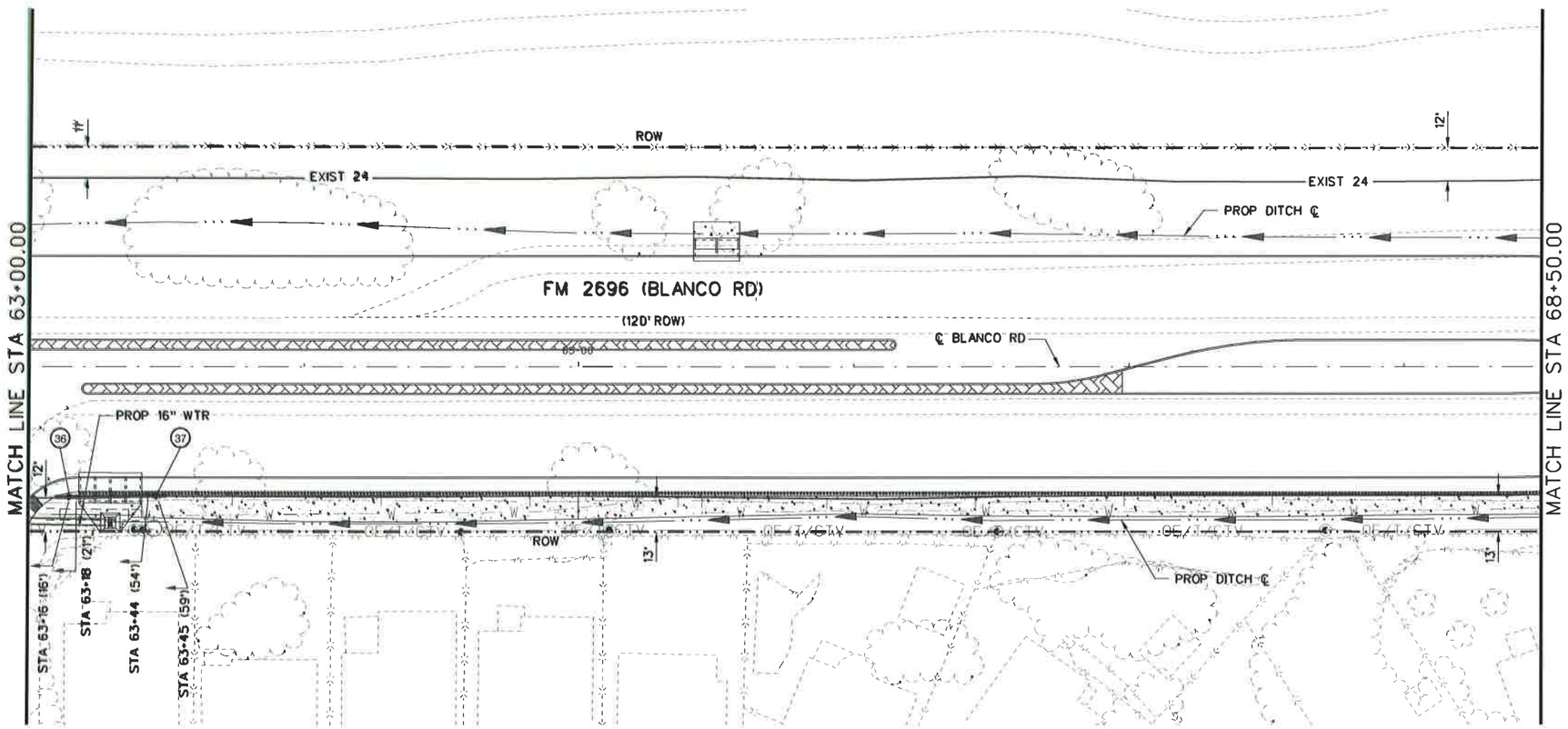

SCALE 25 12.5 0 25 50 FEET

1. ALL PROPOSED GAS MAINS AND SERVICES ARE TO BE INSTALLED AT THE PLANNED GAS TOP OF PIPE ELEVATION INDICATED ON THE LOCATION DATA TABLE.
2. CONTRACTOR TO VERIFY EXISTING FACILITY LOCATIONS PRIOR TO CONSTRUCTION.
3. DIMENSIONS TO CROSS STREETS ARE MEASURED TO EXISTING EDGE OF PAVEMENT. CONTRACTOR TO NOTE DISTANCE TO CROSS STREET ROW IN CPS ENERGY AS BUILT.

NO.	REVISION	BY	DATE

STATE OF TEXAS — MONICA F. SILVER — 85589 — LICENSED PROFESSIONAL ENGINEER

The seal appearing on this document was authorized by MONICA F. SILVER P.E. 85589, on DEC 10, 2007.

Monica F Silver

Cobb Fendley & Associates
8620 N. NEW BRAUNFELS, SUITE 542
SAN ANTONIO, TEXAS 78217
(210) 826-4611

Approved by: Date Approved

Checked by: Date Approved

Map Quadrant	Project No.	Job No.
152-652	G-0309	3827521

CPS ENERGY

CP&Y Chiang, Patel & Yerby, Inc.

BEXAR COUNTY PUBLIC WORKS DIVISION

F.M. 2696 (BLANCO ROAD)
NATURAL GAS RELOCATION PLAN
STA 63+00.00 TO STA 68+50.00

SHEET 11 OF 29

Designed: DP	STATE	BEXAR COUNTY FILE NUMBER	PLAN SET NO.
Checked: MFS	TEXAS		579
Drawn: DC	COUNTY		
Checked: DP	BEXAR		842

d:\cfo\2007\09014.fm2696_glade\utln\project\dgn\09014_UTIL_pp11.dgn
12/10/2007 8:52:21 AM

Contract Exhibit SKT-2

NO PROPOSED CPS GAS FACILITIES ON THIS PAGE

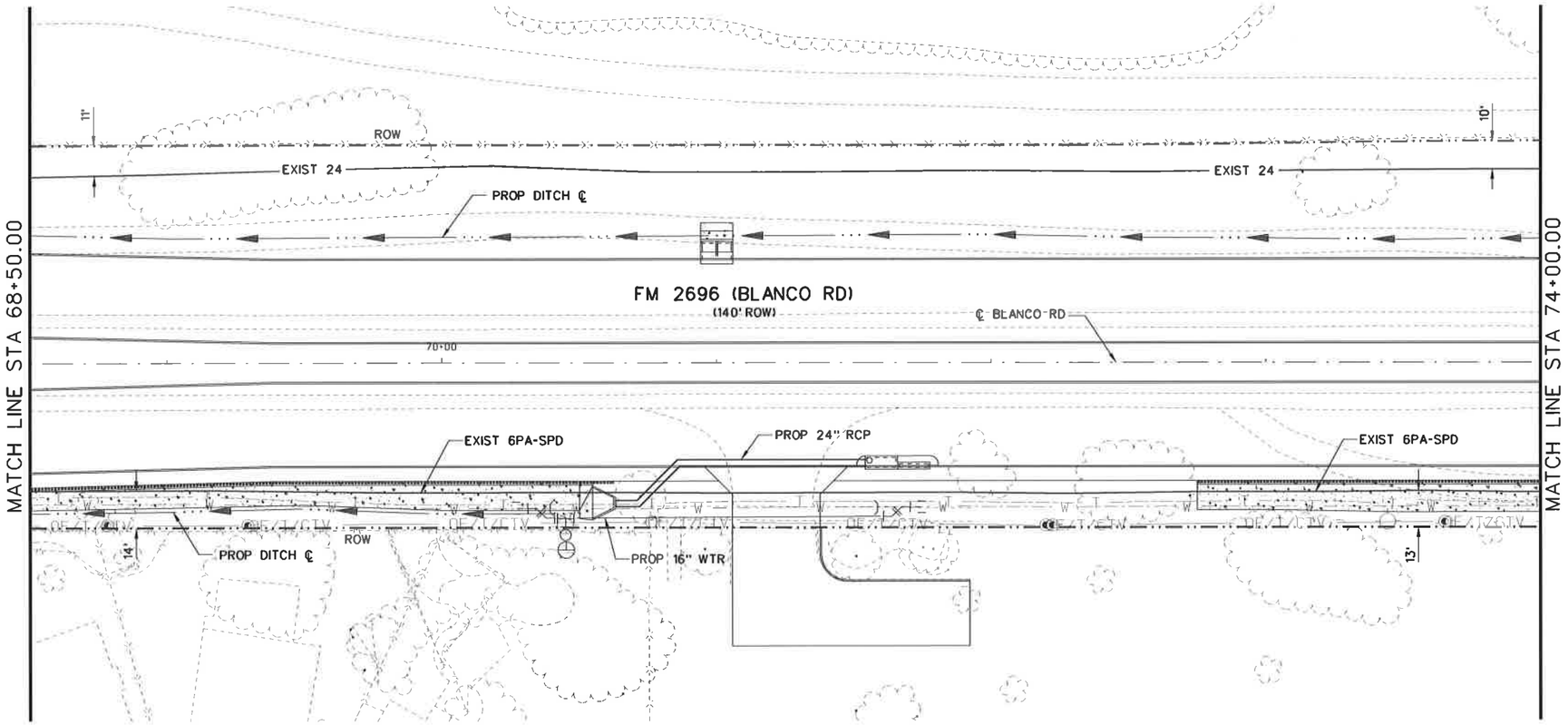

SCALE 25 12.5 0 25 50 FEET

1. ALL PROPOSED GAS MAINS AND SERVICES ARE TO BE INSTALLED AT THE PLANNED GAS TOP OF PIPE ELEVATION INDICATED ON THE LOCATION DATA TABLE.
2. CONTRACTOR TO VERIFY EXISTING FACILITY LOCATIONS PRIOR TO CONSTRUCTION.
3. DIMENSIONS TO CROSS STREETS ARE MEASURED TO EXISTING EDGE OF PAVEMENT. CONTRACTOR TO NOTE DISTANCE TO CROSS STREET ROW IN CPS ENERGY AS BUILT.

NO	REVISION	BY	DATE

STATE OF TEXAS
MONICA F. SILVER
85589
LICENSED
PROFESSIONAL ENGINEER

The seal appearing on this document was authorized by MONICA F. SILVER P.E. 85589, on DEC 10, 2007.

Monica F. Silver

Cobb Fendley & Associates
8620 N. NEW BRAUNFELS, SUITE 542
SAN ANTONIO, TEXAS 78217
(210) 826-4611

Approved by: Date Approved

Checked by: Date Approved

Map Quadrant	Project No.	Job No.
152-652	G-0309	3827521

CPS ENERGY

CP&Y Chiang, Patel & Yerby, Inc.

BEXAR COUNTY
PUBLIC WORKS DIVISION

F.M. 2696 (BLANCO ROAD)
NATURAL GAS
RELOCATION PLAN

STA 68+50.00 TO STA 74+00.00

SHEET 12 OF 29

Designed: DP	STATE	BEXAR COUNTY FILE NUMBER	PLAN SET NO. 580
Checked: MFS	TEXAS		
Drawn: DC	COUNTY		
Checked: DP	BEXAR		842

d:\cfo\2007\09014.fm2696_glade\austin\project\dgn\09014_UTIL_pp12.dgn
12/10/2007 8:52:25 AM

Contract Exhibit SKT-2

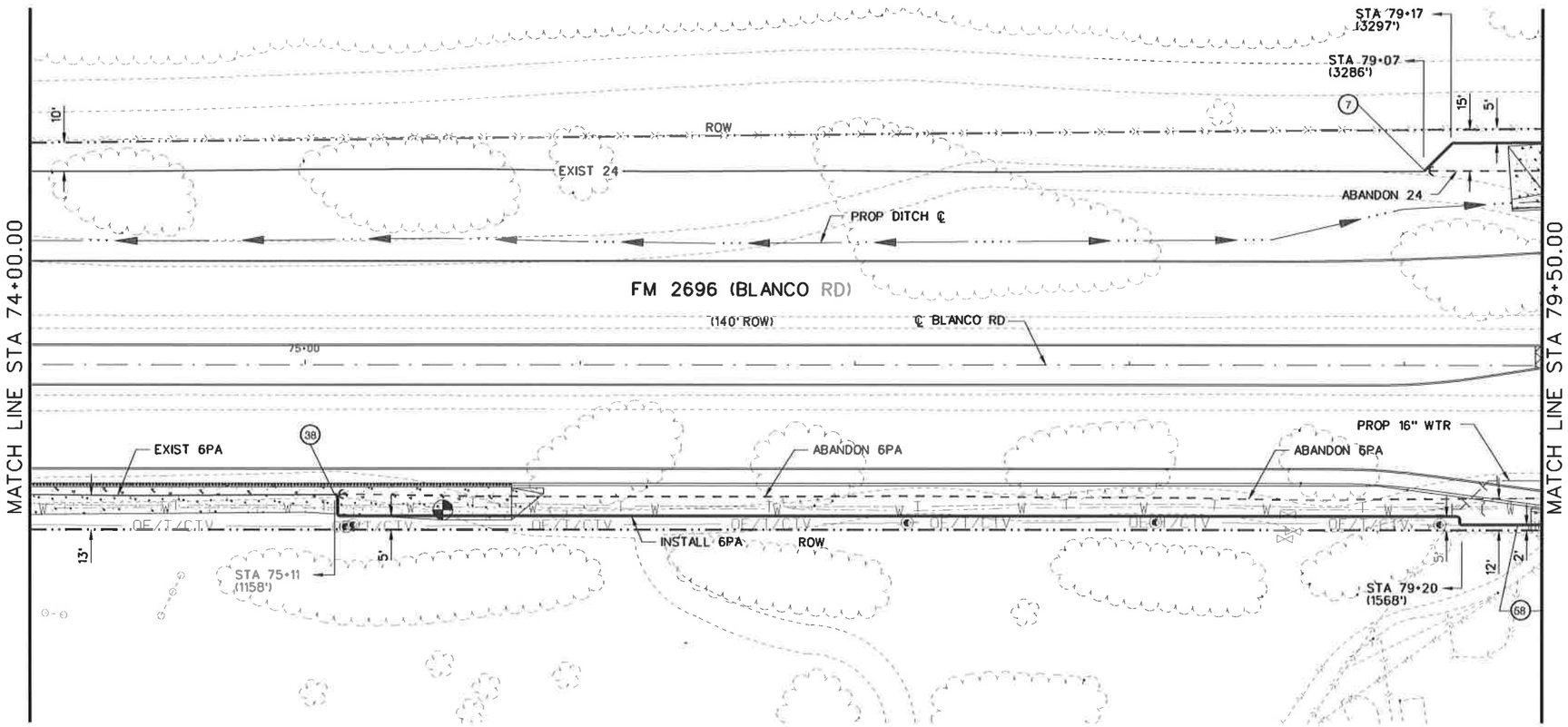

SCALE 25 12.5 0 25 50 FEET

1. ALL PROPOSED GAS MAINS AND SERVICES ARE TO BE INSTALLED AT THE PLANNED GAS TOP OF PIPE ELEVATION INDICATED ON THE LOCATION DATA TABLE.
2. CONTRACTOR TO VERIFY EXISTING FACILITY LOCATIONS PRIOR TO CONSTRUCTION.
3. DIMENSIONS TO CROSS STREETS ARE MEASURED TO EXISTING EDGE OF PAVEMENT. CONTRACTOR TO NOTE DISTANCE TO CROSS STREET ROW IN CPS ENERGY AS BUILT.

NO	REVISION	BY	DATE

STATE OF TEXAS
MONICA F. SILVER
85589
LICENSED PROFESSIONAL ENGINEER

The seal appearing on this document was authorized by MONICA F. SILVER P.E. 85589, on DEC 10, 2007.

Monica F Silver

Cobb Fendley & Associates
8620 N. NEW BRAUNFELS, SUITE 542
SAN ANTONIO, TEXAS 78217
(210) 826-4611

Approved by: Date Approved

Checked by: Date Approved

Map Quadrant	Project No.	Job No.
152-654	G-0309	3827521

CPS ENERGY

CP&Y Chiang, Patel & Yerby, Inc.

BEXAR COUNTY
PUBLIC WORKS DIVISION

F.M. 2696 (BLANCO ROAD)
NATURAL GAS RELOCATION PLAN

STA 74+00.00 TO STA 79+50.00

SHEET 13 OF 29

Designed: DP	STATE	BEXAR COUNTY FILE NUMBER	PLAN SET NO.
Checked: MFS	TEXAS		581
Drawn: DC	COUNTY		
Checked: DP	BEXAR		842

d:\cfb\2007\09014.fm2696_glade\usth\project\dgn\09014_UTIL_pp13.dgn
12/10/2007 8:52:30 AM

Contract Exhibit SKT-2

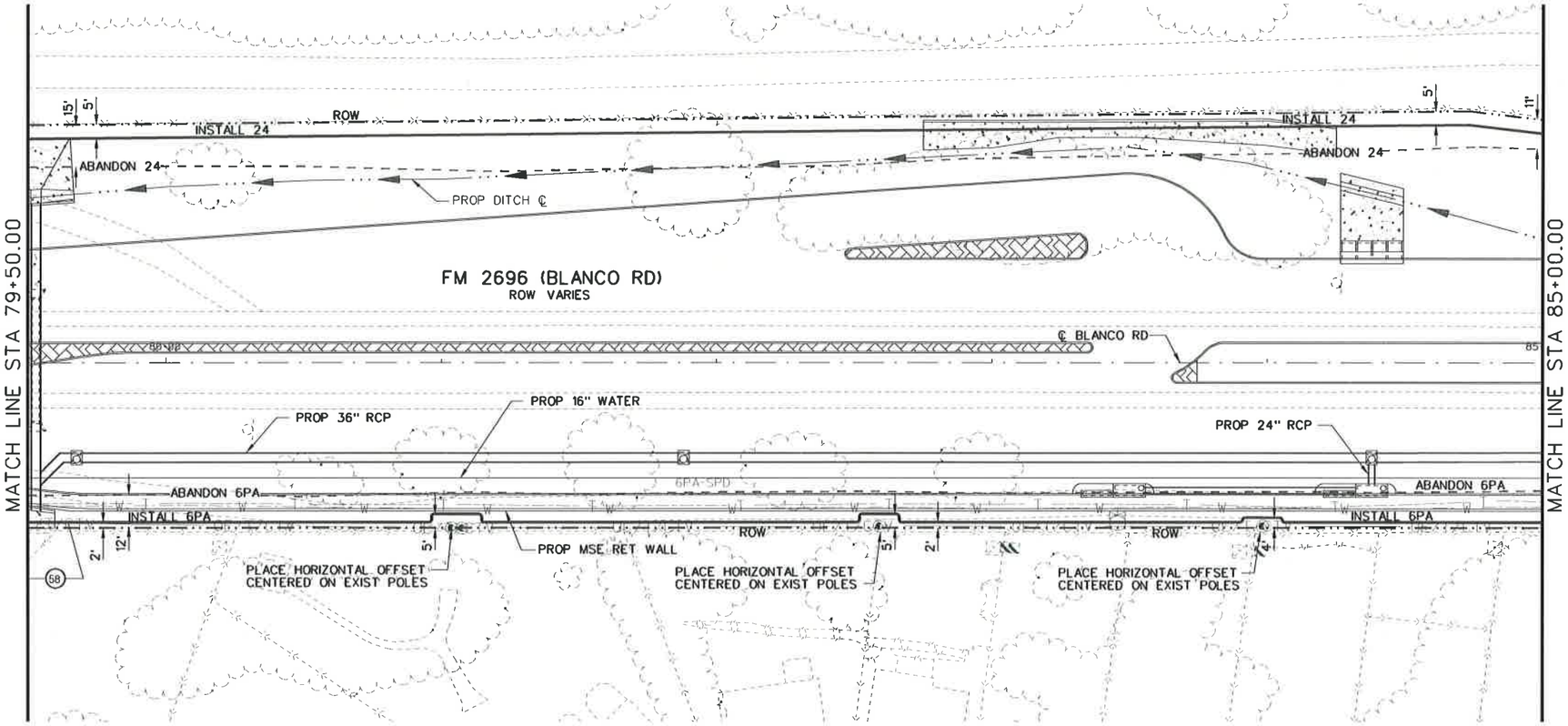

25 12.5 0 25 50
SCALE FEET

1. ALL PROPOSED GAS MAINS AND SERVICES ARE TO BE INSTALLED AT THE PLANNED GAS TOP OF PIPE ELEVATION INDICATED ON THE LOCATION DATA TABLE.
2. CONTRACTOR TO VERIFY EXISTING FACILITY LOCATIONS PRIOR TO CONSTRUCTION.
3. DIMENSIONS TO CROSS STREETS ARE MEASURED TO EXISTING EDGE OF PAVEMENT. CONTRACTOR TO NOTE DISTANCE TO CROSS STREET ROW IN CPS ENERGY AS BUILT.

NO.	REVISION	BY	DATE

STATE OF TEXAS
MONICA F. SILVER
85589
LICENSED PROFESSIONAL ENGINEER

The seal appearing on this document was authorized by MONICA F. SILVER P.E. 85589, on DEC 10, 2007.

Monica F Silver

Cobb Fendley & Associates
8620 N. NEW BRAUNFELS, SUITE 542
SAN ANTONIO, TEXAS 78217
(210) 826-4611

Approved by: Date Approved

Checked by: Date Approved

Map Quadrant	Project No.	Job No.
152-654	G-0309	3827521

cps ENERGY

CP&Y Chiang, Patel & Yerby, Inc.

BEXAR COUNTY
PUBLIC WORKS DIVISION

F.M. 2696 (BLANCO ROAD)
NATURAL GAS
RELOCATION PLAN
STA 79+50.00 TO STA 85+00.00

SHEET 14 OF 29

Designed: DP	STATE	BEXAR COUNTY FILE NUMBER	PLAN SET NO.
Checked: MFS	TEXAS		582
Drawn: DC	COUNTY		OF
Checked: DP	BEXAR		842

d:\cfe\2007\09014 fm2696_glade\ustn\project\dgn\09014_UTL_pp14.dgn
12/10/2007 8:52:34 AM

Contract Exhibit SKT-2

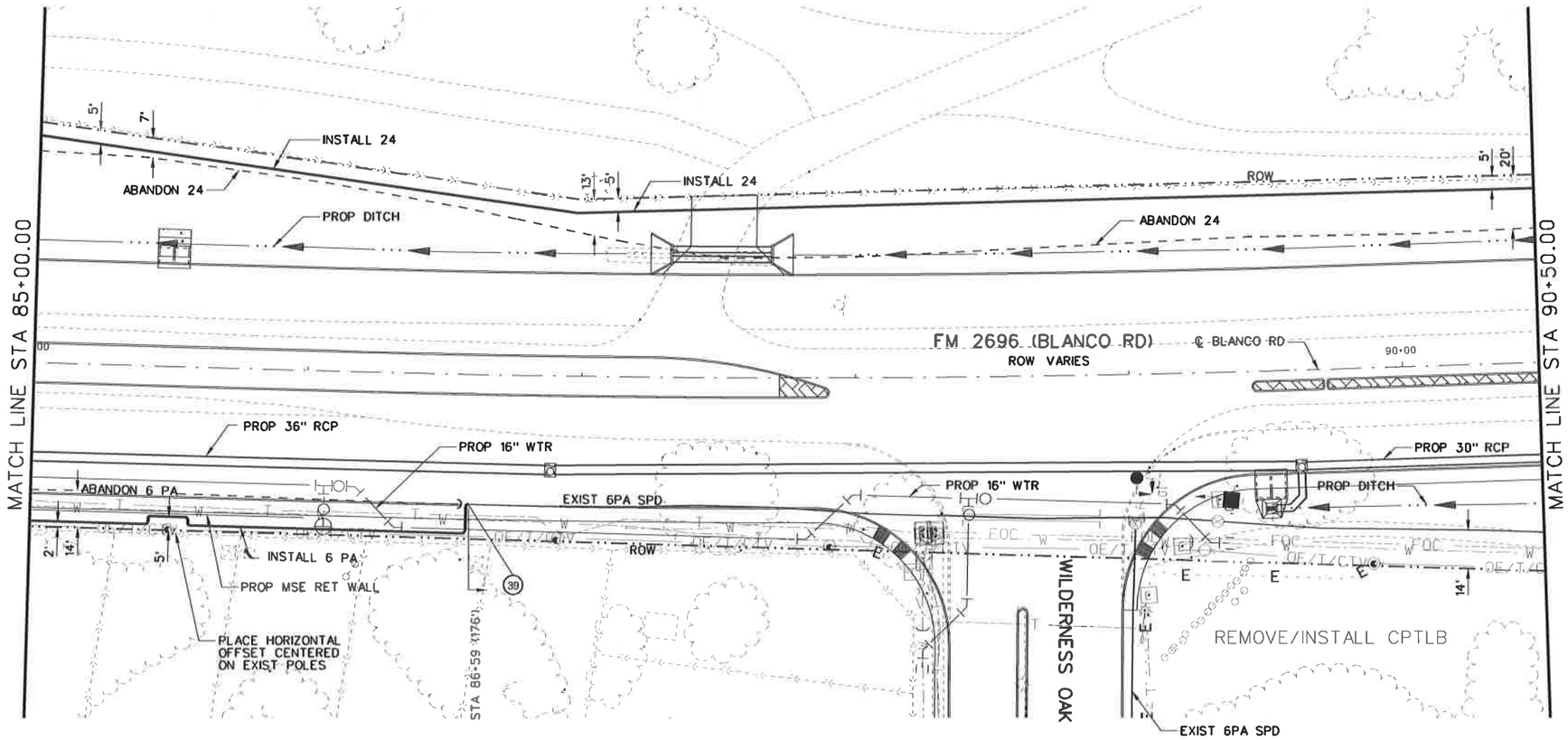

25 12.5 0 25 50
SCALE FEET

1. ALL PROPOSED GAS MAINS AND SERVICES ARE TO BE INSTALLED AT THE PLANNED GAS TOP OF PIPE ELEVATION INDICATED ON THE LOCATION DATA TABLE.
2. CONTRACTOR TO VERIFY EXISTING FACILITY LOCATIONS PRIOR TO CONSTRUCTION.
3. DIMENSIONS TO CROSS STREETS ARE MEASURED TO EXISTING EDGE OF PAVEMENT. CONTRACTOR TO NOTE DISTANCE TO CROSS STREET ROW IN CPS ENERGY AS BUILT.

NO.	REVISION	BY	DATE

STATE OF TEXAS
MONICA F. SILVER
85589
LICENSED PROFESSIONAL ENGINEER

The seal appearing on this document was authorized by MONICA F. SILVER P.E. 85589, on DEC 10, 2007.

Monica F Silver

Cobb Fendley & Associates
8620 N. NEW BRAUNFELS, SUITE 542
SAN ANTONIO, TEXAS 78217
(210) 826-4611

Approved by: Date Approved

Checked by: Date Approved

Map Quadrant	Project No.	Job No.
152-654	G-0309	3827521

cps ENERGY

CP&Y Chiang, Patel & Yerby, Inc.

BEXAR COUNTY
PUBLIC WORKS DIVISION

F.M. 2696 (BLANCO ROAD)
NATURAL GAS
RELOCATION PLAN
STA 85+00.00 TO STA 90+50.00
SHEET 15 OF 29

Designed: DP	STATE	BEXAR COUNTY FILE NUMBER	PLAN SET NO. 583
Checked: MFS	TEXAS		
Drawn: DC	COUNTY		OF
Checked: DP	BEXAR		842

d:\cfa\2007\09014.fm2696_glade\ustn\project\dgn\09014_UTIL_pp15.dgn
12/10/2007 8:52:38 AM

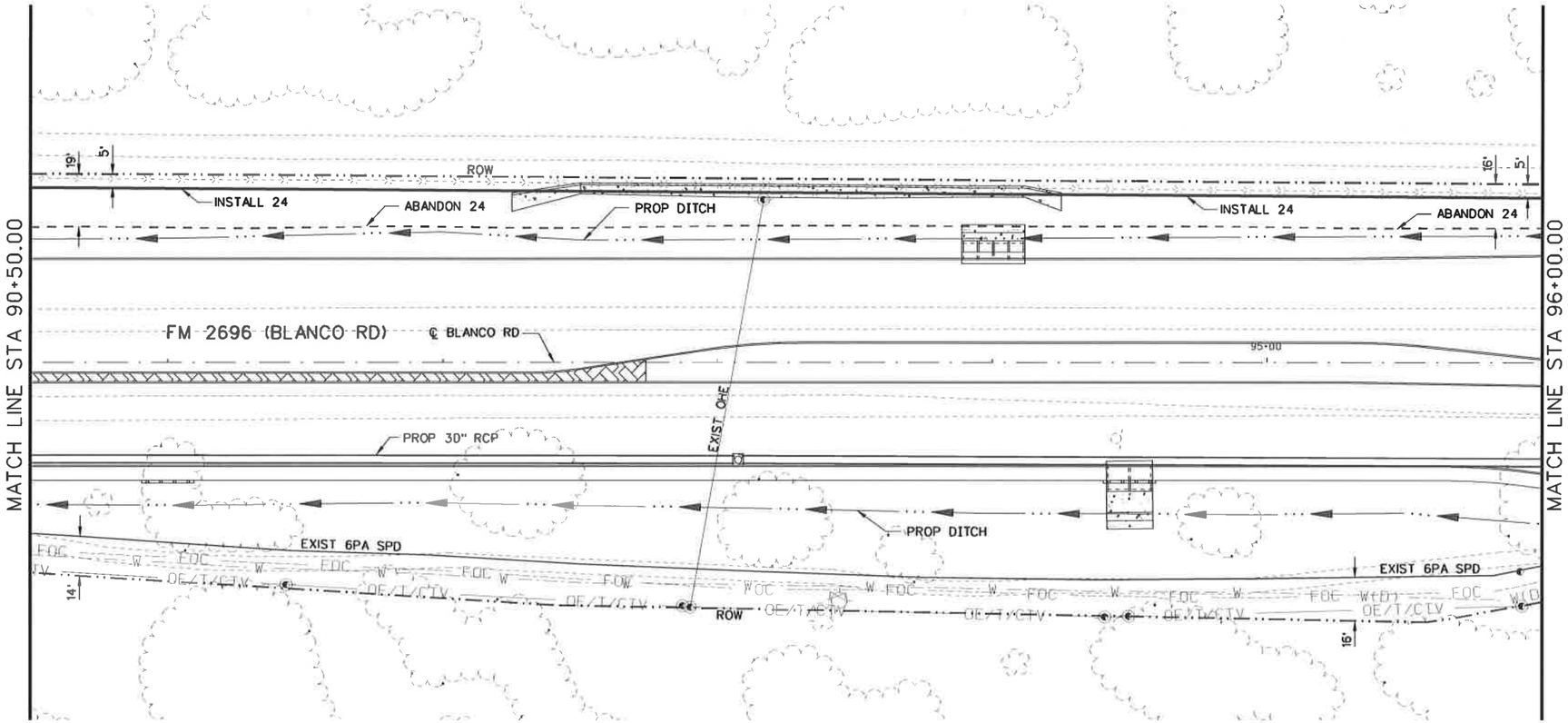

Contract Exhibit SKT-2

25 12.5 0 25 50
SCALE FEET

1. ALL PROPOSED GAS MAINS AND SERVICES ARE TO BE INSTALLED AT THE PLANNED GAS TOP OF PIPE ELEVATION INDICATED ON THE LOCATION DATA TABLE.
2. CONTRACTOR TO VERIFY EXISTING FACILITY LOCATIONS PRIOR TO CONSTRUCTION.
3. DIMENSIONS TO CROSS STREETS ARE MEASURED TO EXISTING EDGE OF PAVEMENT. CONTRACTOR TO NOTE DISTANCE TO CROSS STREET ROW IN CPS ENERGY AS BUILT.

NO.	REVISION	BY	DATE

STATE OF TEXAS
MONICA F. SILVER
85589
LICENSED PROFESSIONAL ENGINEER

The seal appearing on this document was authorized by MONICA F. SILVER P.E. 85589, on DEC 10, 2007.

Monica F Silver

Cobb Fendley & Associates
8620 N. NEW BRAUNFELS, SUITE 542
SAN ANTONIO, TEXAS 78217
(210) 826-4611

Approved by: Date Approved

Checked by: Date Approved

Map Quadrant	Project No.	Job No.
152-654	G-0309	3827521

CPS ENERGY

CP&Y Chiang, Patel & Yerby, Inc.

BEXAR COUNTY
PUBLIC WORKS DIVISION

F.M. 2696 (BLANCO ROAD)
NATURAL GAS
RELOCATION PLAN
STA 90+50.00 TO STA 96+00.00

SHEET 16 OF 29

Designed: DP	STATE	BEXAR COUNTY FILE NUMBER	PLAN SET NO.
Checked: MFS	TEXAS		584
Drawn: DC	COUNTY		OF
Checked: DP	BEXAR		842

d:\cfa\2007\09014.fm2696_glade\usatn\project\dgn\09014_UTIL_pp16.dgn
12/10/2007 8:52:42 AM

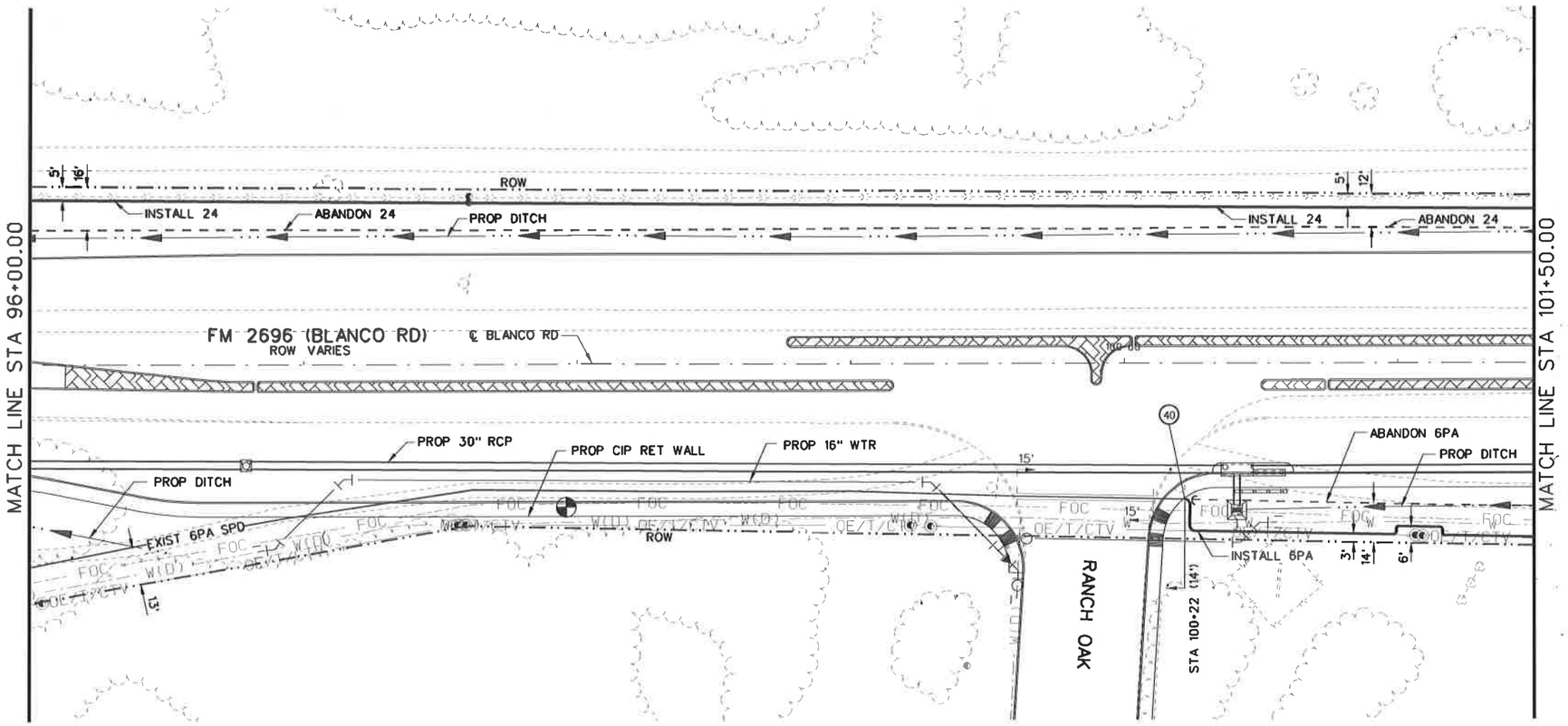

Contract Exhibit SKT-2

25 12.5 0 25 50
SCALE FEET

1. ALL PROPOSED GAS MAINS AND SERVICES ARE TO BE INSTALLED AT THE PLANNED GAS TOP OF PIPE ELEVATION INDICATED ON THE LOCATION DATA TABLE.
2. CONTRACTOR TO VERIFY EXISTING FACILITY LOCATIONS PRIOR TO CONSTRUCTION.
3. DIMENSIONS TO CROSS STREETS ARE MEASURED TO EXISTING EDGE OF PAVEMENT. CONTRACTOR TO NOTE DISTANCE TO CROSS STREET ROW IN CPS ENERGY AS BUILT.

NO.	REVISION	BY	DATE

STATE OF TEXAS
MONICA F. SILVER
85589
LICENSED
PROFESSIONAL ENGINEER

The seal appearing on this document was authorized by MONICA F. SILVER P.E. 85589, on DEC 10, 2007.

Monica F Silver

Cobb Fendley & Associates

8620 N. NEW BRAUNFELS, SUITE 542
SAN ANTONIO, TEXAS 78217
(210) 826-4611

Approved by: Date Approved

Checked by: Date Approved

Map Quadrant	Project No.	Job No.
152-656	G-0309	3827521

CPS ENERGY

CP&Y Chiang, Patel & Yerby, Inc.

BEXAR COUNTY
PUBLIC WORKS DIVISION

F.M. 2696 (BLANCO ROAD)
NATURAL GAS
RELOCATION PLAN

STA 96+00.00 TO STA 101+50.00

SHEET 17 OF 29

Designed: DP	STATE	BEXAR COUNTY FILE NUMBER	PLAN SET NO.
Checked: MFS	TEXAS		565
Drawn: DC	COUNTY		
Checked: DP	BEXAR		842

d:\cfs\2007\09014.fm2696_glade\usth\project\dgn\09014_UTIL_pp17.dgn
12/10/2007 8:52:45 AM

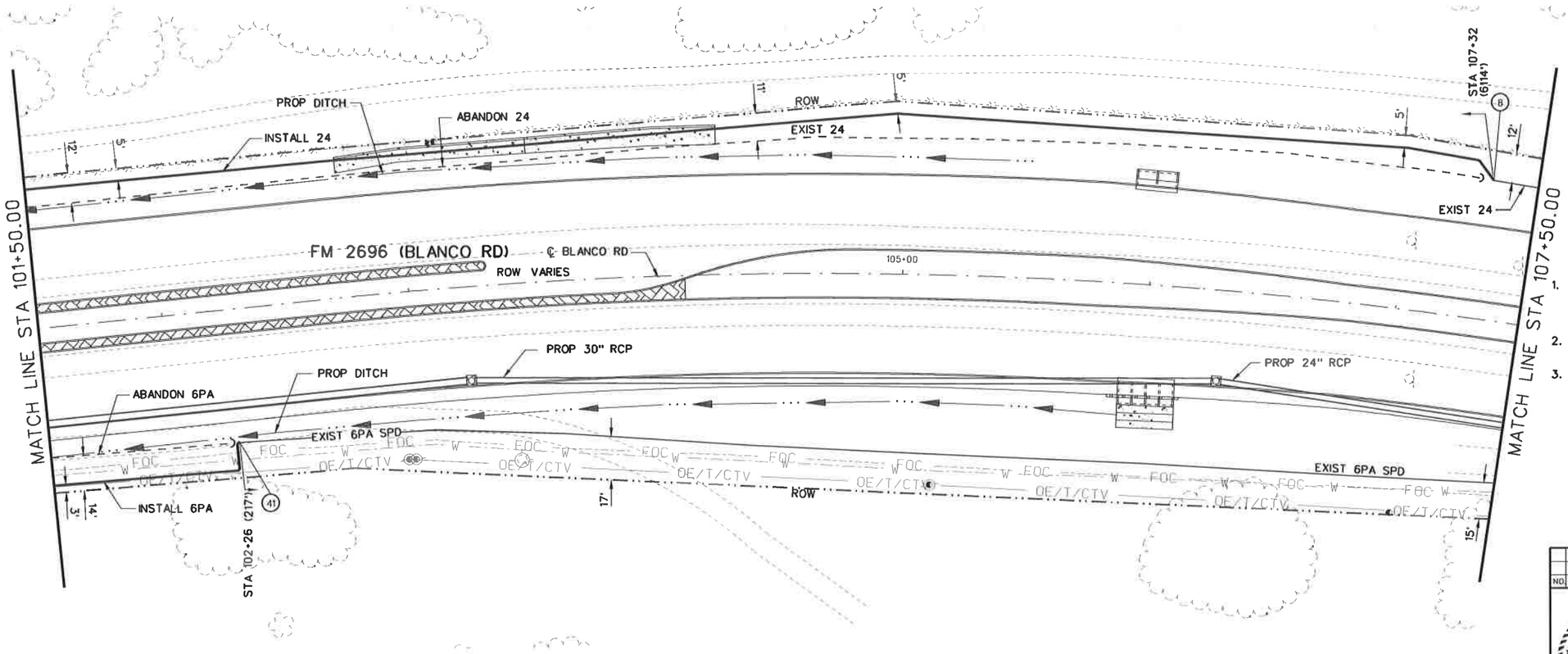

Contract Exhibit SKT-2

25 12.5 0 25 50
SCALE FEET

1. ALL PROPOSED GAS MAINS AND SERVICES ARE TO BE INSTALLED AT THE PLANNED GAS TOP OF PIPE ELEVATION INDICATED ON THE LOCATION DATA TABLE.
2. CONTRACTOR TO VERIFY EXISTING FACILITY LOCATIONS PRIOR TO CONSTRUCTION.
3. DIMENSIONS TO CROSS STREETS ARE MEASURED TO EXISTING EDGE OF PAVEMENT. CONTRACTOR TO NOTE DISTANCE TO CROSS STREET ROW IN CPS ENERGY AS BUILT.

NO.	REVISION	BY	DATE

STATE OF TEXAS
MONICA F. SILVER
85589
LICENSED
PROFESSIONAL ENGINEER

The seal appearing on this document was authorized by MONICA F. SILVER P.E. 85589, on DEC 10, 2007.

Monica F Silver

Cobb Fendley & Associates
8620 N. NEW BRAUNFELS, SUITE 542
SAN ANTONIO, TEXAS 78217
(210) 826-4611

Approved by: Date Approved

Checked by: Date Approved

Map Quadrant	Project No.	Job No.
152-656	G-0309	3827521

CPS ENERGY

CP&Y Chiang, Patel & Yerby, Inc.

BEXAR COUNTY
PUBLIC WORKS DIVISION

F.M. 2696 (BLANCO ROAD)
NATURAL GAS
RELOCATION PLAN
STA 101+50.00 TO STA 107+50.00

SHEET 18 OF 29

Designed: DP	STATE	BEXAR COUNTY FILE NUMBER	PLAN SET NO.
Checked: MFS	TEXAS		586
Drawn: DC	COUNTY		
Checked: DP	BEXAR		842

d:\cfe\2007\09014.fm2696_glade\usts\project\dgn\09014_UTIL_pp18.dgn
12/10/2007 8:52:49 AM

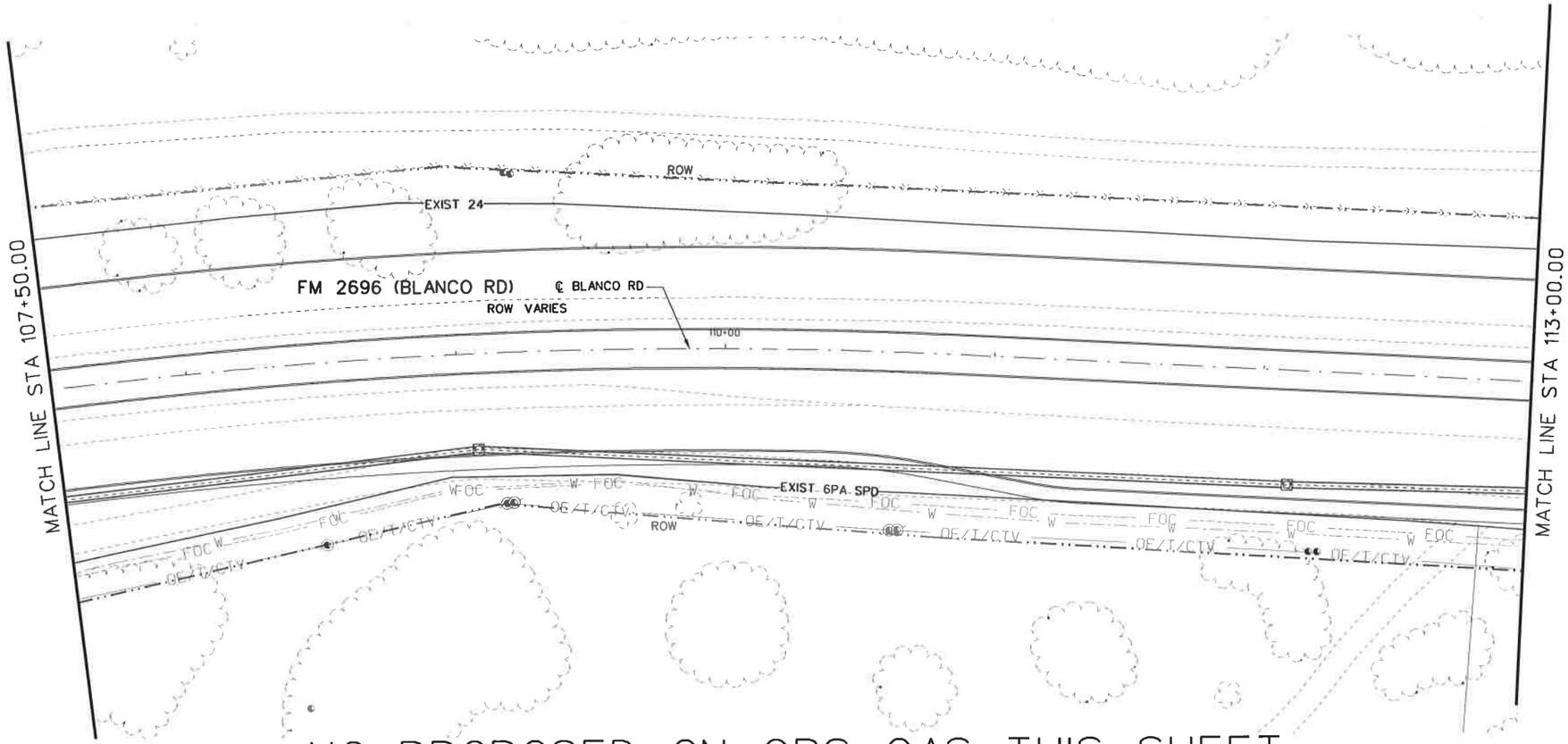

NO PROPOSED ON CPS GAS THIS SHEET

Contract Exhibit SKT-2

25 12.5 0 25 50
SCALE FEET

1. ALL PROPOSED GAS MAINS AND SERVICES ARE TO BE INSTALLED AT THE PLANNED GAS TOP OF PIPE ELEVATION INDICATED ON THE LOCATION DATA TABLE.
2. CONTRACTOR TO VERIFY EXISTING FACILITY LOCATIONS PRIOR TO CONSTRUCTION.
3. DIMENSIONS TO CROSS STREETS ARE MEASURED TO EXISTING EDGE OF PAVEMENT. CONTRACTOR TO NOTE DISTANCE TO CROSS STREET ROW IN CPS ENERGY AS BUILT.

NO.	REVISION	BY	DATE

STATE OF TEXAS
MONICA F. SILVER
85589
LICENSED
PROFESSIONAL ENGINEER

The seal appearing on this document was authorized by MONICA F. SILVER P.E. 85589, on DEC 10, 2007.

Monica F Silver

Cobb Fendley & Associates
8620 N. NEW BRAUNFELS, SUITE 542
SAN ANTONIO, TEXAS 78217
(210) 826-4611

Approved by: Date Approved

Checked by: Date Approved

Map Quadrant	Project No.	Job No.
152-656	G-0309	3827521

cps ENERGY

CP&Y Chiang, Patel & Yerby, Inc.

BEXAR COUNTY
PUBLIC WORKS DIVISION

F.M. 2696 (BLANCO ROAD)
NATURAL GAS
RELOCATION PLAN
STA 107+50.00 TO STA 113+00.00

SHEET 19 OF 29

Designed: DP	STATE	BEXAR COUNTY FILE NUMBER	PLAN SET NO.
Checked: MFS	TEXAS		587
Drawn: DC	COUNTY		
Checked: DP	BEXAR		842

d:\cfo\2007\09014.fm2696_glade\ustn\project\dgn\09014_UTIL_pp19.dgn
12/10/2007 8:52:54 AM

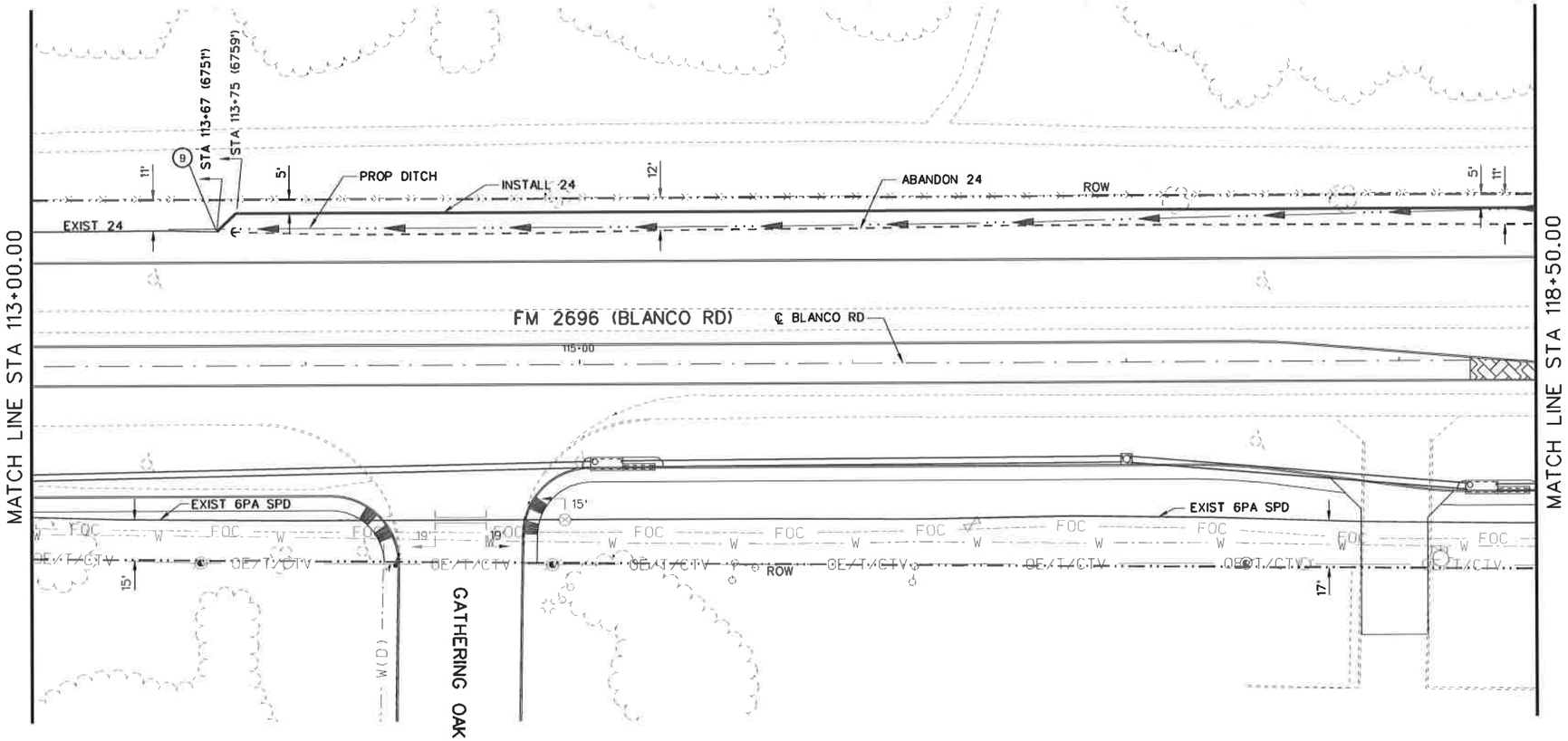

Contract Exhibit SKT-2

25 12.5 0 25 50
SCALE FEET

1. ALL PROPOSED GAS MAINS AND SERVICES ARE TO BE INSTALLED AT THE PLANNED GAS TOP OF PIPE ELEVATION INDICATED ON THE LOCATION DATA TABLE.
2. CONTRACTOR TO VERIFY EXISTING FACILITY LOCATIONS PRIOR TO CONSTRUCTION.
3. DIMENSIONS TO CROSS STREETS ARE MEASURED TO EXISTING EDGE OF PAVEMENT. CONTRACTOR TO NOTE DISTANCE TO CROSS STREET ROW IN CPS ENERGY AS BUILT.

NO	REVISION	BY	DATE

STATE OF TEXAS
MONICA F. SILVER
85589
LICENSED
PROFESSIONAL ENGINEER

The seal appearing on this document was authorized by MONICA F. SILVER P.E. 85589, on DEC 10, 2007.

Monica F Silver

Cobb Fendley & Associates
8620 N. NEW BRAUNFELS, SUITE 542
SAN ANTONIO, TEXAS 78217
(210) 826-4611

Approved by: Date Approved

Checked by: Date Approved

Map Quadrant	Project No.	Job No.
152-656	G-0309	3827521

CPS ENERGY

CP&Y Chiang, Patel & Yerby, Inc.

BEXAR COUNTY
PUBLIC WORKS DIVISION

F.M. 2696 (BLANCO ROAD)
NATURAL GAS
RELOCATION PLAN
STA 113+00.00 TO STA 118+50.00

SHEET 20 OF 29

Designed: DP	STATE	BEXAR COUNTY FILE NUMBER	PLAN SET NO.
Checked: MFS	TEXAS		588
Drawn: DC	COUNTY		
Checked: DP	BEXAR		842

d:\cfa\2007\09014_fm2696_globe\path\project\dgn\09014_UTIL_pp20.dgn
12/10/2007 8:52:58 AM

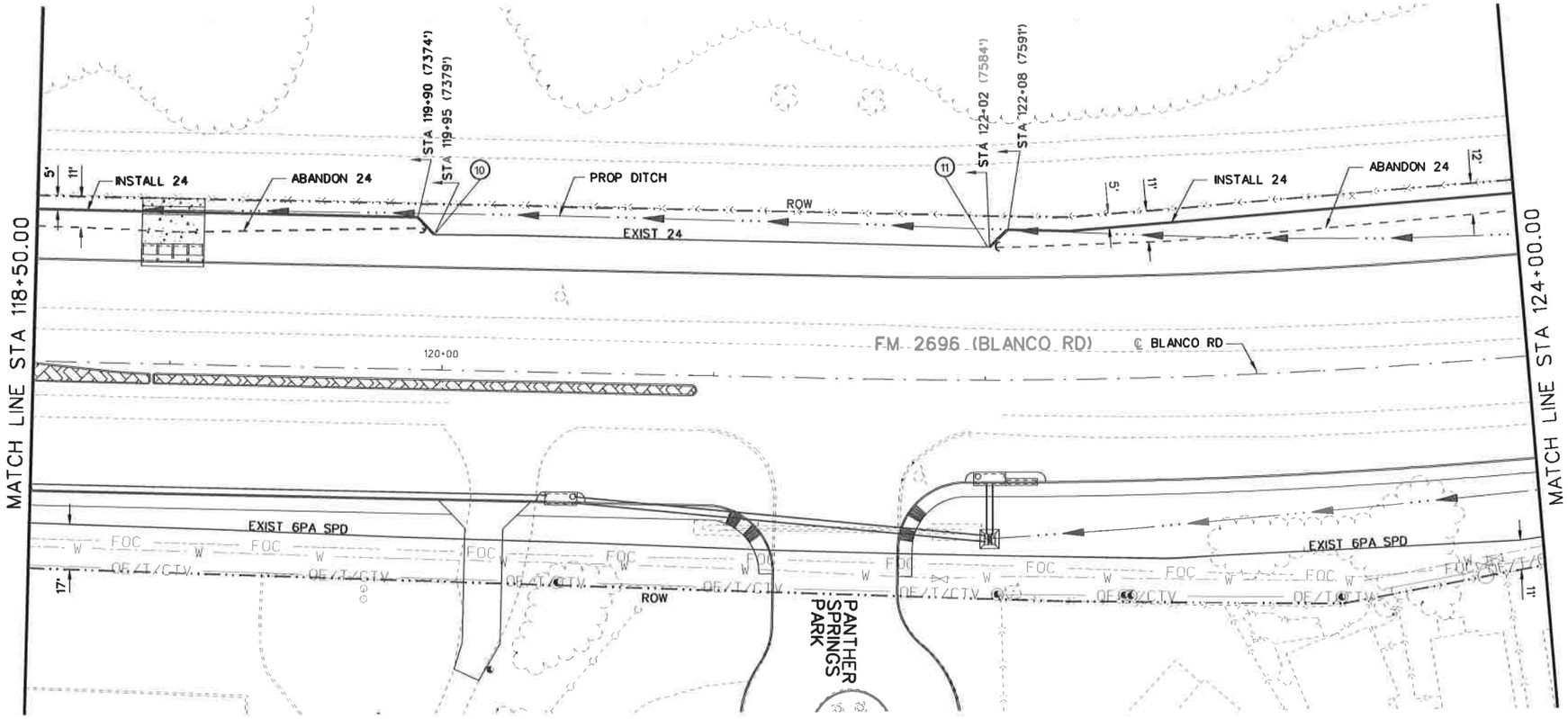

Contract Exhibit SKT-2

25 12.5 0 25 50
SCALE FEET

1. ALL PROPOSED GAS MAINS AND SERVICES ARE TO BE INSTALLED AT THE PLANNED GAS TOP OF PIPE ELEVATION INDICATED ON THE LOCATION DATA TABLE.
2. CONTRACTOR TO VERIFY EXISTING FACILITY LOCATIONS PRIOR TO CONSTRUCTION.
3. DIMENSIONS TO CROSS STREETS ARE MEASURED TO EXISTING EDGE OF PAVEMENT. CONTRACTOR TO NOTE DISTANCE TO CROSS STREET ROW IN CPS ENERGY AS BUILT.

NO	REVISION	BY	DATE

STATE OF TEXAS
MONICA F. SILVER
85589
LICENSED
PROFESSIONAL ENGINEER

The seal appearing on this document was authorized by MONICA F. SILVER P.E. 85589, on DEC 10, 2007.

Monica F Silver

Cobb Fendley & Associates
8620 N. NEW BRAUNFELS, SUITE 542
SAN ANTONIO, TEXAS 78217
(210) 826-4611

Approved by: Date Approved

Checked by: Date Approved

Map Quadrant	Project No.	Job No.
152-658	G-0309	3827521

CPS ENERGY

CP&Y Chiang, Patel & Yerby, Inc.

BEXAR COUNTY
PUBLIC WORKS DIVISION

F.M. 2696 (BLANCO ROAD)
NATURAL GAS
RELOCATION PLAN

STA 118+50.00 TO STA 124+00.00

SHEET 21 OF 29

Designed: DP	STATE	BEXAR COUNTY FILE NUMBER	PLAN SET 589
Checked: MFS	TEXAS		
Drawn: DC	COUNTY		OF
Checked: DP	BEXAR		842

d:\cfo\2007\09014.fm2696_glade\ustn\project\dgn\09014_UTL_pg21.dgn
12/10/2007 8:53:01 AM

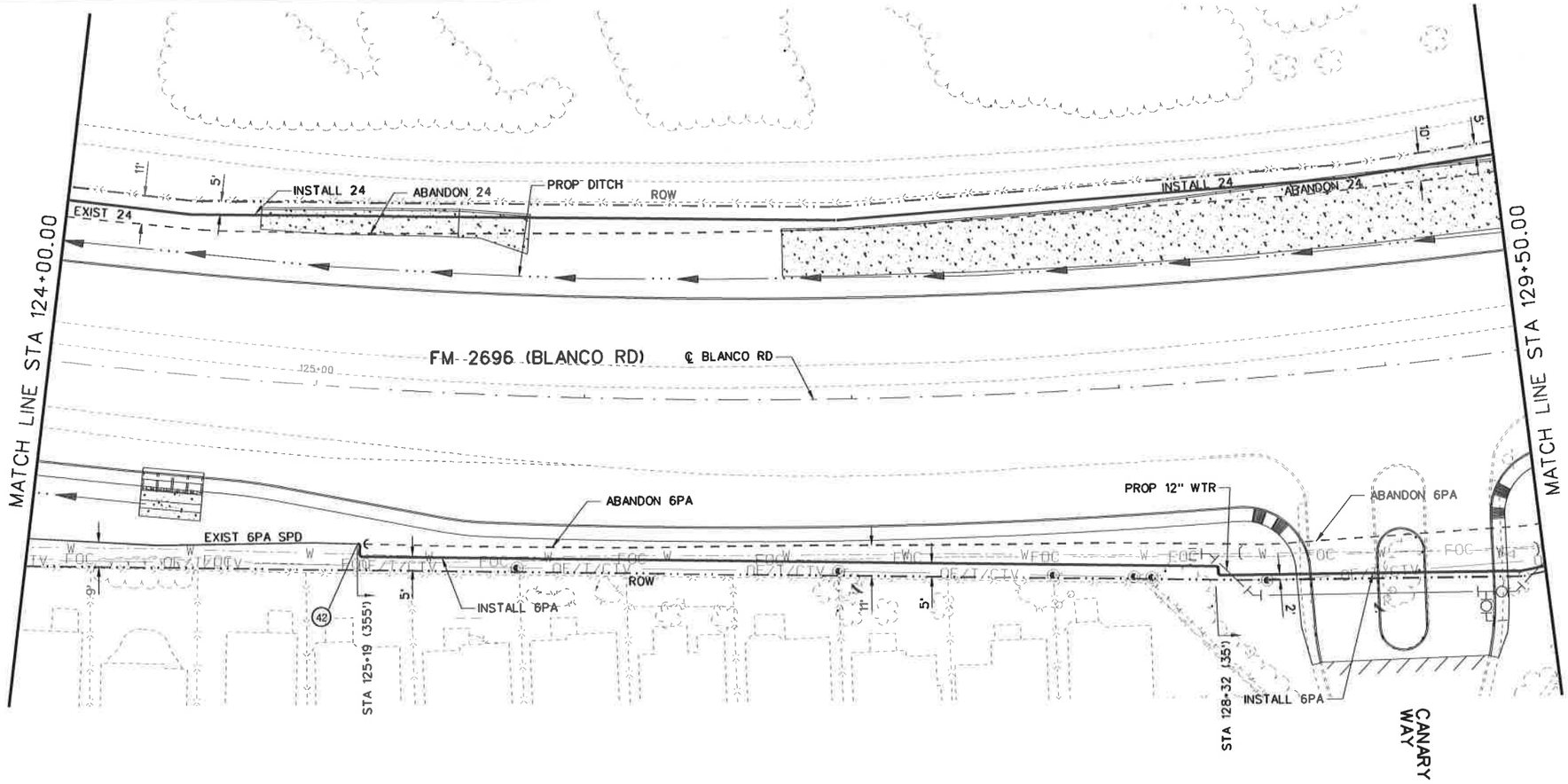

Contract Exhibit SKT-2

25 12.5 0 25 50
SCALE FEET

1. ALL PROPOSED GAS MAINS AND SERVICES ARE TO BE INSTALLED AT THE PLANNED GAS TOP OF PIPE ELEVATION INDICATED ON THE LOCATION DATA TABLE.
2. CONTRACTOR TO VERIFY EXISTING FACILITY LOCATIONS PRIOR TO CONSTRUCTION.
3. DIMENSIONS TO CROSS STREETS ARE MEASURED TO EXISTING EDGE OF PAVEMENT. CONTRACTOR TO NOTE DISTANCE TO CROSS STREET ROW IN CPS ENERGY AS BUILT.

NO	REVISION	BY	DATE

STATE OF TEXAS
MONICA F. SILVER
85589
LICENSED
PROFESSIONAL ENGINEER

The seal appearing on this document was authorized by MONICA F. SILVER P.E. 85589, on DEC 10, 2007.

Monica F Silver

Cobb Fendley & ASSOCIATES
8620 N. NEW BRAUNFELS, SUITE 542
SAN ANTONIO, TEXAS 78217
(210) 826-4611

Approved by: Date Approved

Checked by: Date Approved

Map Quadrant	Project No.	Job No.
152-689	G-0309	3827521

CPS ENERGY

CP&Y Chiang, Patel & Yerby, Inc.

BEXAR COUNTY
PUBLIC WORKS DIVISION

F.M. 2696 (BLANCO ROAD)
NATURAL GAS
RELOCATION PLAN

STA 124+00.00 TO STA 129+50.00

SHEET 22 OF 29

Designed: DP	STATE	BEXAR COUNTY FILE NUMBER	PLAN SET NO.
Checked: MFS	TEXAS		590
Drawn: DC	COUNTY		OF
Checked: DP	BEXAR		842

d:\cfo\2007\09014_fm2696_glade\austn\project\dgn\09014_UTIL_pp22.dgn
12/10/2007 8:53:05 AM

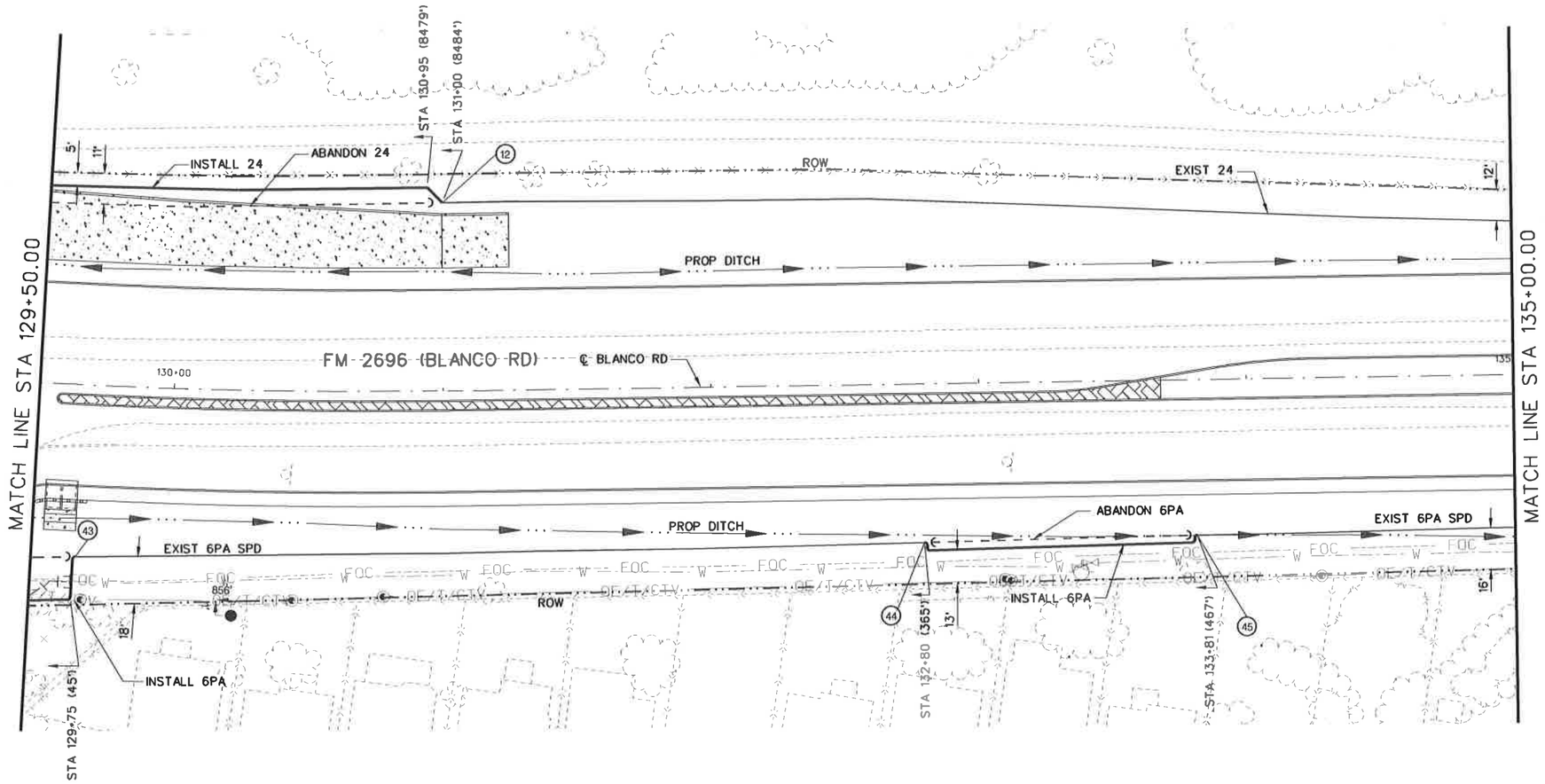

Contract Exhibit SKT-2

25 12.5 0 25 50
SCALE FEET

1. ALL PROPOSED GAS MAINS AND SERVICES ARE TO BE INSTALLED AT THE PLANNED GAS TOP OF PIPE ELEVATION INDICATED ON THE LOCATION DATA TABLE.
2. CONTRACTOR TO VERIFY EXISTING FACILITY LOCATIONS PRIOR TO CONSTRUCTION.
3. DIMENSIONS TO CROSS STREETS ARE MEASURED TO EXISTING EDGE OF PAVEMENT. CONTRACTOR TO NOTE DISTANCE TO CROSS STREET ROW IN CPS ENERGY AS BUILT.

NO	REVISION	BY	DATE

STATE OF TEXAS
MONICA F. SILVER
85589
LICENSED
PROFESSIONAL ENGINEER

The seal appearing on this document was authorized by MONICA F. SILVER P.E. 85589, on DEC 10, 2007.

Monica F Silver

Cobb Fendley & Associates

8620 N. NEW BRAUNFELS, SUITE 542
SAN ANTONIO, TEXAS 78217
(210) 826-4611

Approved by: Date Approved

Checked by: Date Approved

Map Quadrant	Project No.	Job No.
152-648	G-0309	3827521

cps ENERGY

CP&Y Chiang, Patel & Yerby, Inc.

BEXAR COUNTY
PUBLIC WORKS DIVISION

F.M. 2696 (BLANCO ROAD)
NATURAL GAS
RELOCATION PLAN

STA 129+50.00 TO STA 135+00.00

SHEET 23 OF 29

Designed: DP	STATE	BEXAR COUNTY FILE NUMBER	PLAN SET NO.
Checked: MFS	TEXAS		591
Drawn: DC	COUNTY		
Checked: DP	BEXAR		842

d:\cfo\2007\09014.fm2696_glade\austin\project\dgn\09014_UTIL_pp23.dgn
12/10/2007 8:53:10 AM

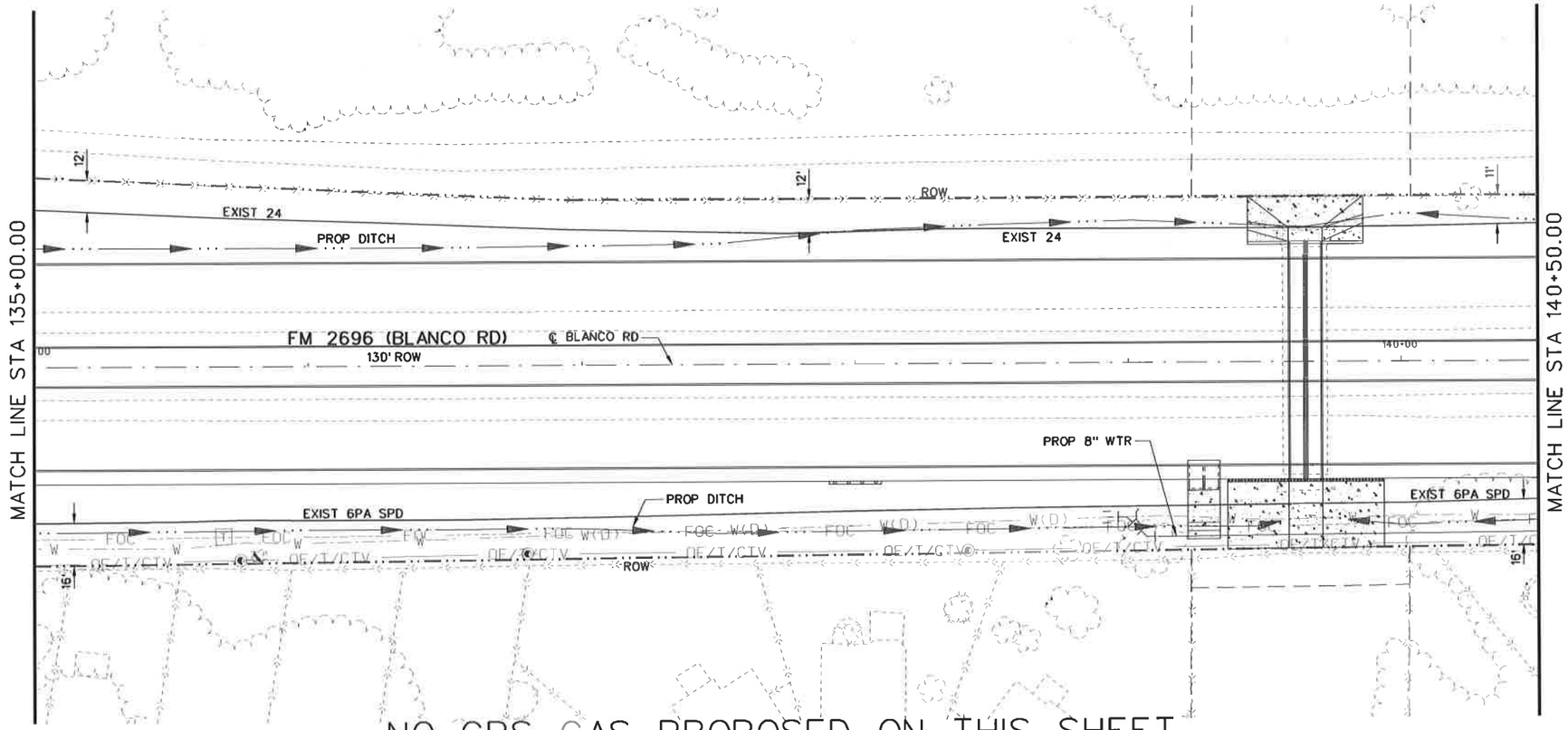

NO CPS GAS PROPOSED ON THIS SHEET

Contract Exhibit SKT-2

25 12.5 0 25 50
SCALE FEET

1. ALL PROPOSED GAS MAINS AND SERVICES ARE TO BE INSTALLED AT THE PLANNED GAS TOP OF PIPE ELEVATION INDICATED ON THE LOCATION DATA TABLE.
2. CONTRACTOR TO VERIFY EXISTING FACILITY LOCATIONS PRIOR TO CONSTRUCTION.
3. DIMENSIONS TO CROSS STREETS ARE MEASURED TO EXISTING EDGE OF PAVEMENT. CONTRACTOR TO NOTE DISTANCE TO CROSS STREET ROW IN CPS ENERGY AS BUILT.

NO	REVISION	BY	DATE

STATE OF TEXAS
MONICA F. SILVER
85589
LICENSED
PROFESSIONAL ENGINEER

The seal appearing on this document was authorized by MONICA F. SILVER P.E. 85589, on DEC 10, 2007.

Monica F Silver

Cobb Fendley & Associates
8620 N. NEW BRAUNFELS, SUITE 542
SAN ANTONIO, TEXAS 78217
(210) 826-4611

Approved by: Date Approved

Checked by: Date Approved

Map Quadrant	Project No.	Job No.
152-660	G-0309	3827521

CPS ENERGY

CP&Y Chiang, Patel & Yerby, Inc.

BEXAR COUNTY
PUBLIC WORKS DIVISION

F.M. 2696 (BLANCO ROAD)
NATURAL GAS
RELOCATION PLAN
STA 35+00.00 TO STA 140+50.00

SHEET 24 OF 29

Designed: DP	STATE	BEXAR COUNTY FILE NUMBER	PLAN SET NO. 592
Checked: MFS	TEXAS		
Drawn: DC	COUNTY		OF
Checked: DP	BEXAR		842

d:\cfa\2007\09014_fm2696_glade\usth\project\dgn\09014_UTIL_pp24.dgn
12/10/2007 8:53:14 AM

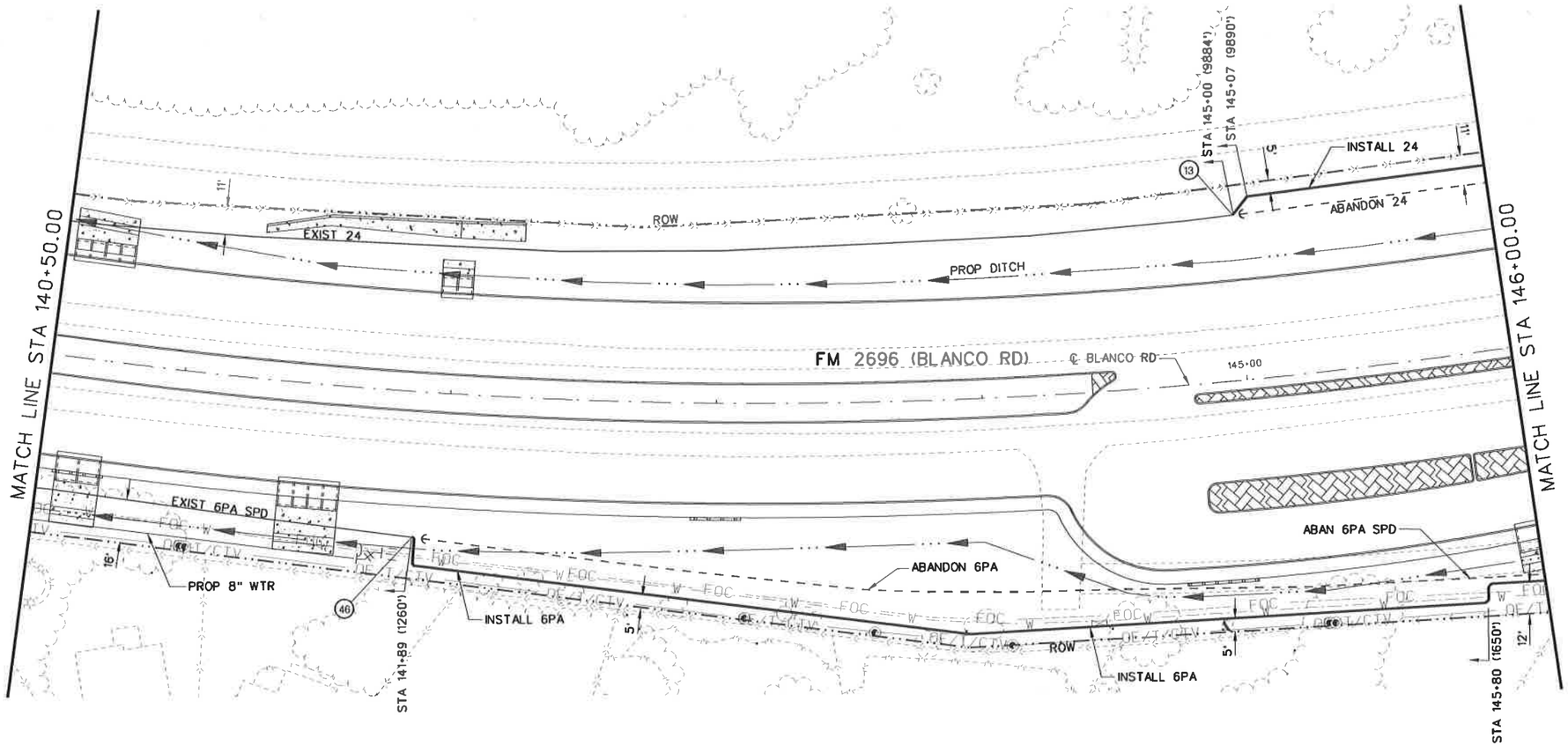

Contract Exhibit SKT-2

25 12.5 0 25 50
SCALE FEET

1. ALL PROPOSED GAS MAINS AND SERVICES ARE TO BE INSTALLED AT THE PLANNED GAS TOP OF PIPE ELEVATION INDICATED ON THE LOCATION DATA TABLE.
2. CONTRACTOR TO VERIFY EXISTING FACILITY LOCATIONS PRIOR TO CONSTRUCTION.
3. DIMENSIONS TO CROSS STREETS ARE MEASURED TO EXISTING EDGE OF PAVEMENT. CONTRACTOR TO NOTE DISTANCE TO CROSS STREET ROW IN CPS ENERGY AS BUILT.

NO.	REVISION	BY	DATE

STATE OF TEXAS
MONICA F. SILVER
85589
LICENSED
PROFESSIONAL ENGINEER

The seal appearing on this document was authorized by MONICA F. SILVER P.E. 85589, on DEC 10, 2007.

Monica F. Silver

Cobb Fendley & Associates
8620 N. NEW BRAUNFELS, SUITE 542
SAN ANTONIO, TEXAS 78217
(210) 826-4611

Approved by: Date Approved

Checked by: Date Approved

Map Quadrant	Project No.	Job No.
152-660	G-0309	3827521

CPS ENERGY

CP&Y Chiang, Patel & Yerby, Inc.

BEXAR COUNTY
PUBLIC WORKS DIVISION

F.M. 2696 (BLANCO ROAD)
NATURAL GAS
RELOCATION PLAN

STA 140+50.00 TO STA 146+00.00

SHEET 25 OF 29

Designed: DP	STATE	BEXAR COUNTY FILE NUMBER	PLAN SET NO.
Checked: MFS	TEXAS		593
Drawn: DC	COUNTY		
Checked: DP	BEXAR		842

d:\cfa\2007\09014.fm2696_glade\usth\project\dgn\09014_UTIL_pp25.dgn
12/10/2007 8:53:18 AM

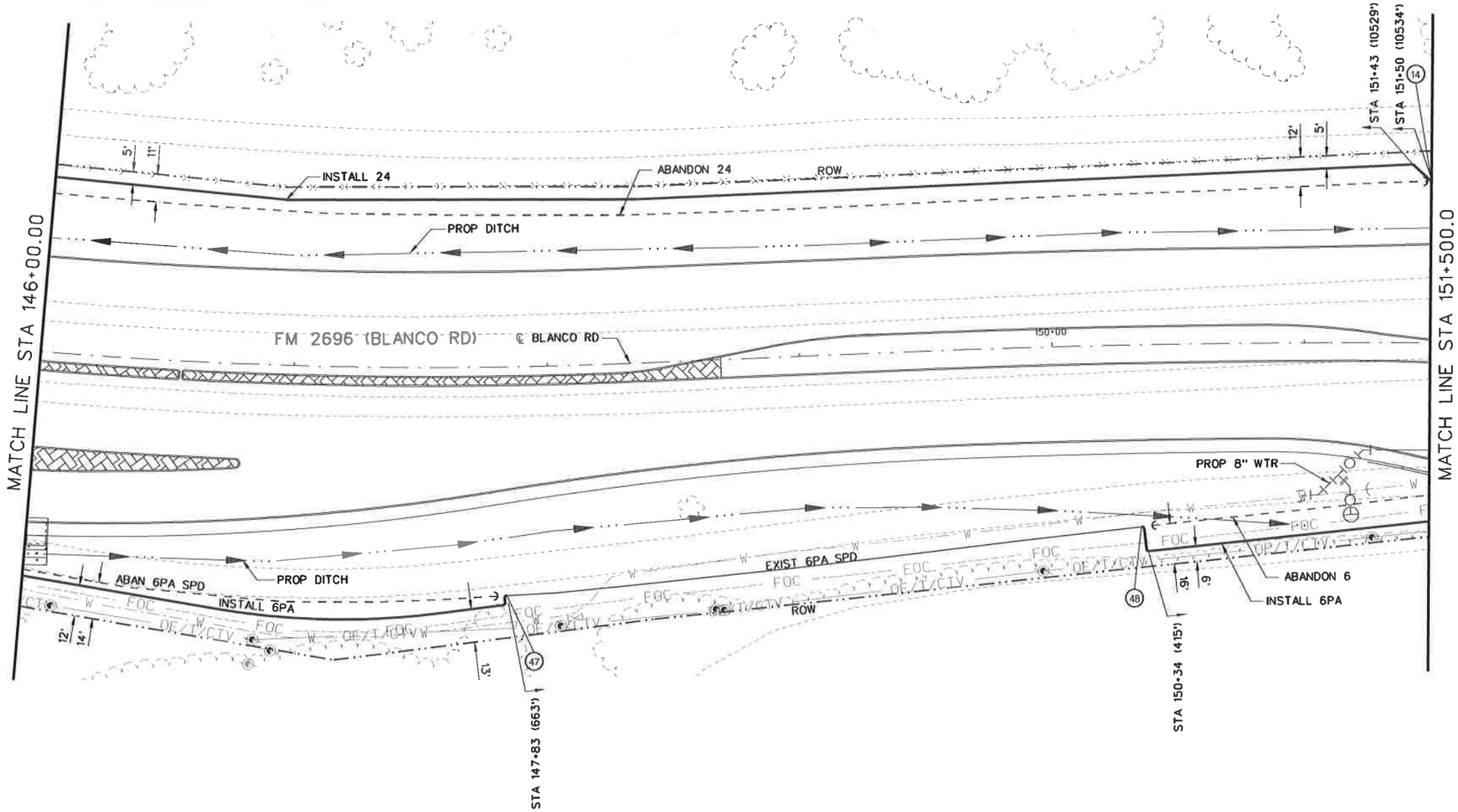

Contract Exhibit SKT-2

25 12.5 0 25 50
SCALE FEET

1. ALL PROPOSED GAS MAINS AND SERVICES ARE TO BE INSTALLED AT THE PLANNED GAS TOP OF PIPE ELEVATION INDICATED ON THE LOCATION DATA TABLE.
2. CONTRACTOR TO VERIFY EXISTING FACILITY LOCATIONS PRIOR TO CONSTRUCTION.
3. DIMENSIONS TO CROSS STREETS ARE MEASURED TO EXISTING EDGE OF PAVEMENT. CONTRACTOR TO NOTE DISTANCE TO CROSS STREET ROW IN CPS ENERGY AS BUILT.

NO	REVISION	BY	DATE

STATE OF TEXAS
MONICA F. SILVER
85589
LICENSED
PROFESSIONAL ENGINEER

The seal appearing on this document was authorized by MONICA F. SILVER P.E. 85589, on DEC 10, 2007.

Monica F Silver

Cobb Fendley & Associates
8620 N. NEW BRAUNFELS, SUITE 542
SAN ANTONIO, TEXAS 78217
(210) 826-4611

Approved by: Date Approved

Checked by: Date Approved

Map Quadrant	Project No.	Job No.
152-689	G-0309	3827521

CPS ENERGY

CP&Y Chiang, Patel & Yerby, Inc.

BEXAR COUNTY
PUBLIC WORKS DIVISION

F.M. 2696 (BLANCO ROAD)
NATURAL GAS
RELOCATION PLAN

STA 146+00.00 TO STA 151+50.00

SHEET 26 OF 29

Designed: DP	STATE	BEXAR COUNTY FILE NUMBER	PLAN SET NO. 594
Checked: MFS	TEXAS		
Drawn: DC	COUNTY		OF
Checked: DP	BEXAR		842

d:\cfb\2007\09014 fm2696_globe\utah\project\dgn\09014_UTIL_pp26.dgn
12/10/2007 8:53:22 AM

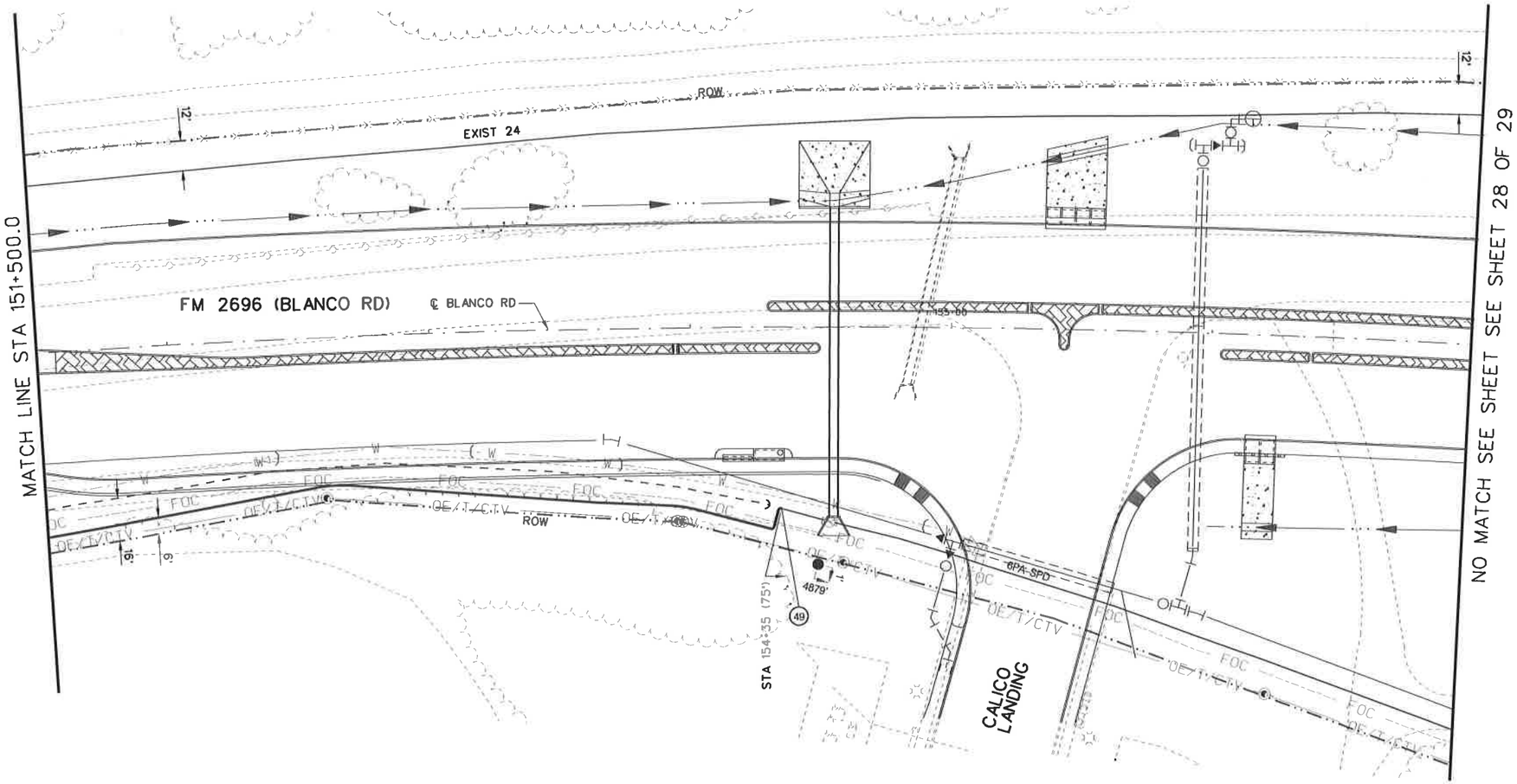

Contract Exhibit SKT-2

25 12.5 0 25 50
SCALE FEET

1. ALL PROPOSED GAS MAINS AND SERVICES ARE TO BE INSTALLED AT THE PLANNED GAS TOP OF PIPE ELEVATION INDICATED ON THE LOCATION DATA TABLE.
2. CONTRACTOR TO VERIFY EXISTING FACILITY LOCATIONS PRIOR TO CONSTRUCTION.
3. DIMENSIONS TO CROSS STREETS ARE MEASURED TO EXISTING EDGE OF PAVEMENT. CONTRACTOR TO NOTE DISTANCE TO CROSS STREET ROW IN CPS ENERGY AS BUILT.

NO.	REVISION	BY	DATE

STATE OF TEXAS
MONICA F. SILVER
85589
LICENSED
PROFESSIONAL ENGINEER

The seal appearing on this document was authorized by MONICA F. SILVER P.E. 85589, on DEC 10, 2007.

Monica F Silver

Cobb Fendley & Associates
8620 N. NEW BRAUNFELS, SUITE 542
SAN ANTONIO, TEXAS 78217
(210) 826-4611

Approved by: Date Approved

Checked by: Date Approved

Map Quadrant	Project No.	Job No.
152-689	G-0309	3827521

CPS ENERGY

CP&Y Chiang, Patel & Yerby, Inc.

BEXAR COUNTY
PUBLIC WORKS DIVISION

F.M. 2696 (BLANCO ROAD)
NATURAL GAS
RELOCATION PLAN
STA 151+50.00

SHEET 27 OF 29

Designed: DP	STATE	BEXAR COUNTY FILE NUMBER	PLAN SET NO.
Checked: MFS	TEXAS		594 A
Drawn: DC	COUNTY		
Checked: DP	BEXAR		842

d:\cfa\2007\09014 fm2696_glade\austin\project\dgn\09014_UTIL_pp27.dgn
12/10/2007 8:53:26 AM

Contract Exhibit SKT-2

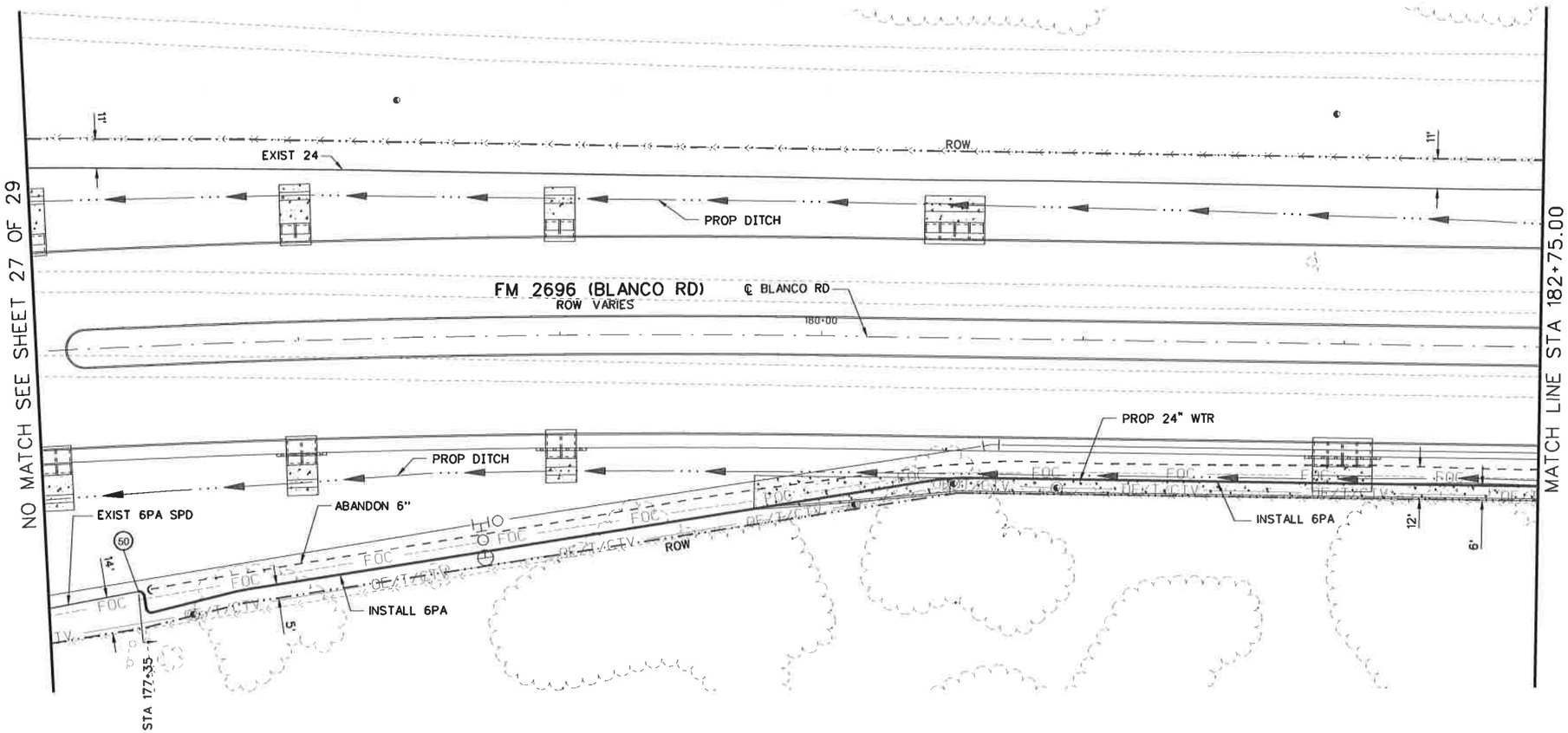

SCALE 25 12.5 0 25 50 FEET

1. ALL PROPOSED GAS MAINS AND SERVICES ARE TO BE INSTALLED AT THE PLANNED GAS TOP OF PIPE ELEVATION INDICATED ON THE LOCATION DATA TABLE.
2. CONTRACTOR TO VERIFY EXISTING FACILITY LOCATIONS PRIOR TO CONSTRUCTION.
3. DIMENSIONS TO CROSS STREETS ARE MEASURED TO EXISTING EDGE OF PAVEMENT. CONTRACTOR TO NOTE DISTANCE TO CROSS STREET ROW IN CPS ENERGY AS BUILT.

NO	REVISION	BY	DATE

STATE OF TEXAS
MONICA F. SILVER
85589
LICENSED
PROFESSIONAL ENGINEER

The seal appearing on this document was authorized by MONICA F. SILVER P.E. 85589, on DEC 10, 2007.

Monica F Silver

Cobb Fendley & Associates
8620 N. NEW BRAUNFELS, SUITE 542
SAN ANTONIO, TEXAS 78217
(210) 826-4611

Approved by: Date Approved

Checked by: Date Approved

Map Quadrant	Project No.	Job No.
147 629	G-0309	3827521

CPS ENERGY

CP&Y Chiang, Patel & Yerby, Inc.

BEXAR COUNTY
PUBLIC WORKS DIVISION

F.M. 2696 (BLANCO ROAD)
NATURAL GAS
RELOCATION PLAN

STA 177+00.00 TO STA 187+75.00

SHEET 28 OF 29

Designed: DP	STATE	BEXAR COUNTY FILE NUMBER	PLAN SET NO. 594 B
Checked: MFS	TEXAS		
Drawn: DC	COUNTY		OF
Checked: DP	BEXAR		842

d:\cfa\2007\09014.fm2696_glade\austin\project\dgn\09014_UTIL_pp28.dgn
12/10/2007 8:53:30 AM

Contract Exhibit SKT-2

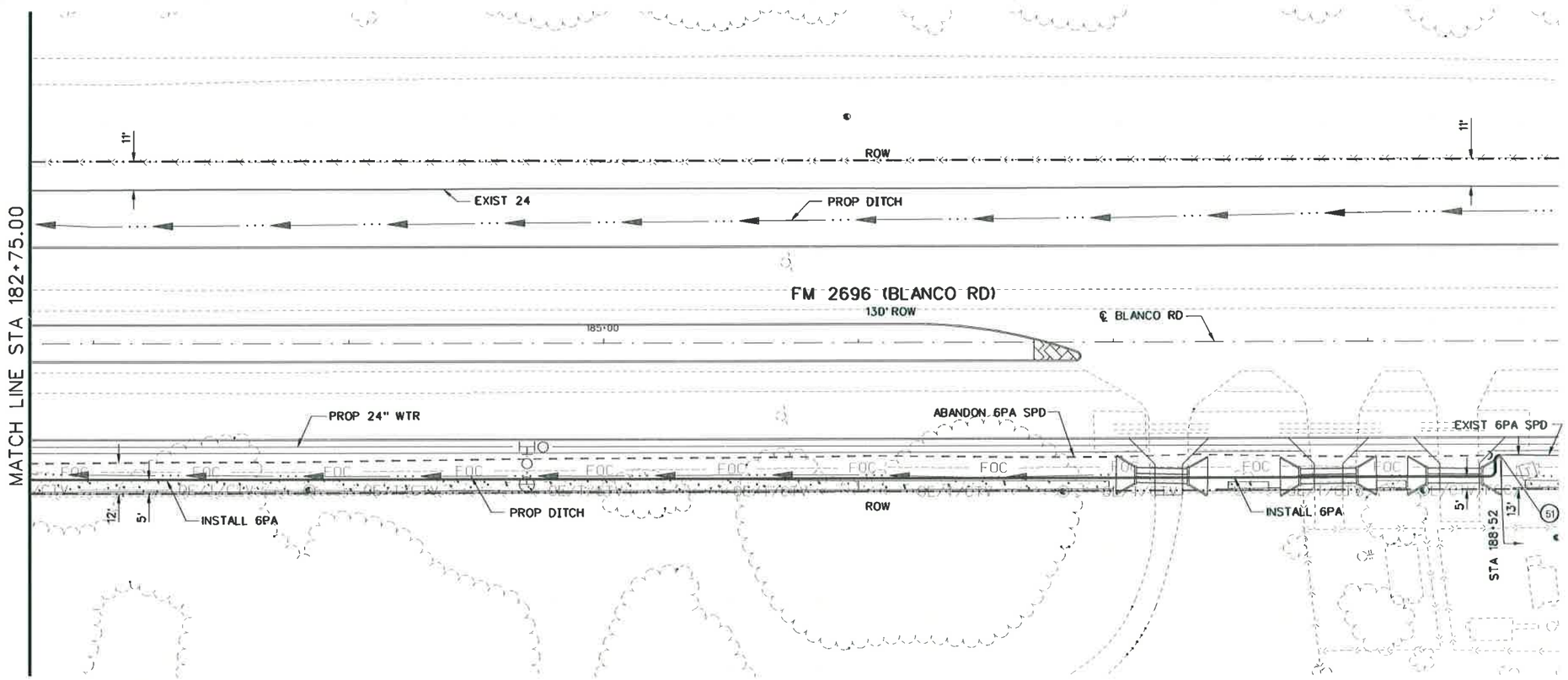

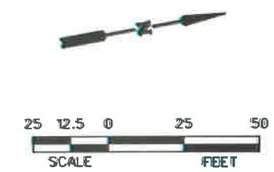

1. ALL PROPOSED GAS MAINS AND SERVICES ARE TO BE INSTALLED AT THE PLANNED GAS TOP OF PIPE ELEVATION INDICATED ON THE LOCATION DATA TABLE.
2. CONTRACTOR TO VERIFY EXISTING FACILITY LOCATIONS PRIOR TO CONSTRUCTION.
3. DIMENSIONS TO CROSS STREETS ARE MEASURED TO EXISTING EDGE OF PAVEMENT. CONTRACTOR TO NOTE DISTANCE TO CROSS STREET ROW IN CPS ENERGY AS BUILT.

NO	REVISION	BY	DATE

STATE OF TEXAS
MONICA F. SILVER
85589
LICENSED
PROFESSIONAL ENGINEER

The seal appearing on this document was authorized by MONICA F. SILVER P.E. 85589, on DEC 10, 2007.

Monica F Silver

Cobb Fendley & Associates

8620 N. NEW BRAUNFELS, SUITE 542
SAN ANTONIO, TEXAS 78217
(210) 826-4611

Approved by: Date Approved

Checked by: Date Approved

Map Quadrant	Project No.	Job No.
147 629	G-0309	3827521

cps ENERGY

CP&Y Chiang, Patel & Yerby, Inc.

BEXAR COUNTY
PUBLIC WORKS DIVISION

F.M. 2696 (BLANCO ROAD)
NATURAL GAS
RELOCATION PLAN

STA 182+75 TO END

SHEET 29 OF 29

Designed: DP	STATE	BEXAR COUNTY FILE NUMBER	PLAN SET NO.
Checked: MFS	TEXAS		545
Drawn: DC	COUNTY		
Checked: DP	BEXAR		842

d:\cfa\2007\09014.fm2696_glade\ustn\project\dgn\09014_UTIL_pp29.dgn
12/10/2007 8:53:34 AM

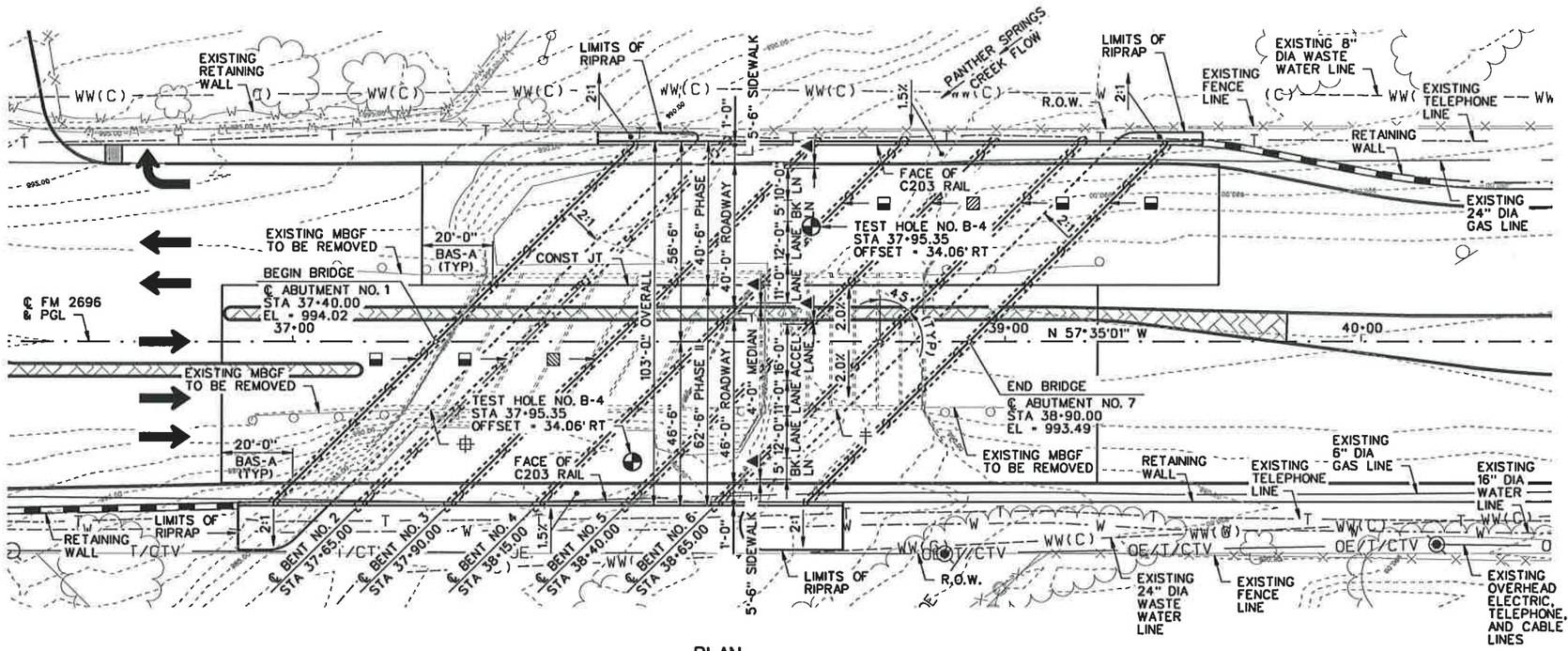

PLAN

EXISTING 7 - 9' x 5' MBC (41.5' LENGTH) TO BE REMOVED.

EXISTING 7 - 6' x 5' MBC (36' LENGTH) TO BE REMOVED.

▲ 1'-0" OFFSET

SEALED CONSTRUCTION JOINT

TYPE A JOINT

GENERAL NOTES:

1. DESIGNED ACCORDING TO 2007 AASHTO LRFD STANDARD SPECIFICATIONS (HL93 LOADING).
2. THE CONTRACTOR SHALL VERIFY ALL ELEVATIONS AND DIMENSIONS TO EXISTING STRUCTURES IN THE FIELD PRIOR TO COMMENCING WORK OR ORDERING MATERIALS.
3. (E) = EXPANSION INTERIOR BENT.
   (F) = FIXED ABUTMENT OR INTERIOR BENT.
   SEE MISC CIP SLAB SPAN DETAILS FOR MORE INFORMATION.
4. ALL ABUTMENTS AND BENTS AT BEARING S 77°24'59" W.
5. SEE TYPICAL SECTIONS SHEETS FOR BRIDGE TYPICAL SECTIONS.
6. BRIDGE SIDEWALK EXPANSION JOINT COVER PLATE TO BE PLACED IN SIDEWALK AT BENT NOS. 3 AND 5. SEE STANDARD SHEET BS-EJCP FOR DETAILS.
7. SEE TEMPORARY SHORING NO. 1 AND NO. 2 SHEETS FOR LIMITS AND QUANTITIES OF SHORING REQUIRED AT ABUTMENTS IN PHASE I CONSTRUCTION.
8. SEE MISCELLANEOUS DRAINAGE DETAILS - STRUCTURE 3 GRADING PLAN FOR FINISHED GROUND ELEVATIONS UNDER BRIDGE.

EXIST NBI NUMBER: 15-015-0-2708-01-002
NBI NUMBER: 15-015-0-2708-01-097
FUNCTIONAL CLASS = RURAL MAJOR COLLECTOR
DESIGN SPEED = 45 MPH
ADT = 14,400 (2005). 23,900 (2025)

HYDRAULIC DATA TABLE

HW_{10} = 988.16	HW_{25} = 988.68	HW_{100} = 989.41
Q_{10} = 1,235 cfs	Q_{25} = 1,635 cfs	Q_{100} = 2,313 cfs
V_{10} = 7.64 ft/s	V_{25} = 8.01 ft/s	V_{100} = 8.74 ft/s

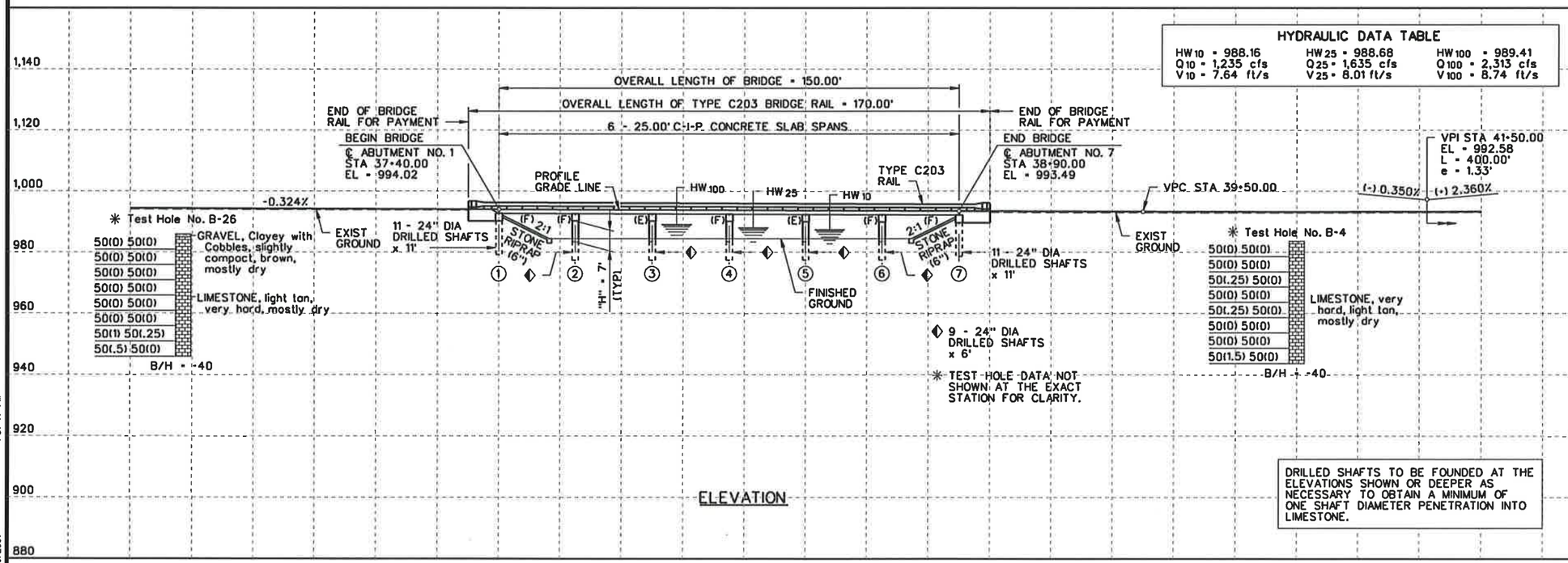

ELEVATION

DRILLED SHAFTS TO BE FOUNDED AT THE ELEVATIONS SHOWN OR DEEPER AS NECESSARY TO OBTAIN A MINIMUM OF ONE SHAFT DIAMETER PENETRATION INTO LIMESTONE.

STATE OF TEXAS
THOMAS G. ASHCRAFT
81411
REGISTERED PROFESSIONAL ENGINEER
Thomas G. Ashcraft
12/10/07

NO.	REVISION	BY	DATE

CP&Y Chiang, Patel & Yerby, Inc.

BEXAR COUNTY PUBLIC WORKS DIVISION

F.M. 2696 (BLANCO ROAD)

BRIDGE LAYOUT
PANTHER SPRINGS CREEK BRIDGE
STRUCTURE NO. 3

Designed: GLL	STATE	BEXAR COUNTY FILE NUMBER	PLAN SET NO. 59B
Checked: TGA	TEXAS		
Drawn: ART	COUNTY		OF
Checked: TGA	BEXAR	2708-01-022, ETC.	842

pw:/Active Projects/BEXG102/8.00 Plans and Drawings/8.10 Cut Sheets/8.1.02 Bridge/(2) Structure No. 3/6102CABRB.21.040
12/10/2007 4:57:47 PM

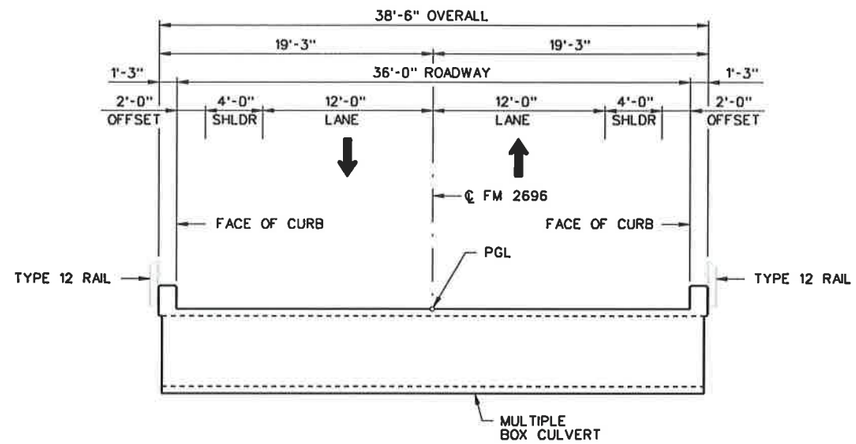

EXISTING TYPICAL SECTION

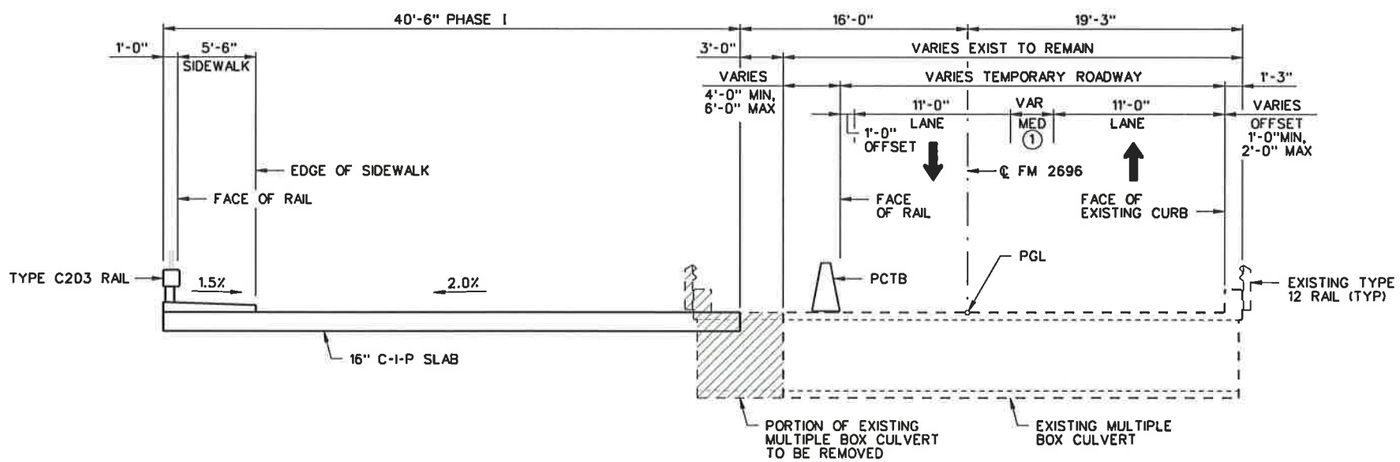

PHASE I CONSTRUCTION

(1) 0'-0" MIN, 4'-0" MAX

STATE OF TEXAS
THOMAS G. ASHCRAFT
81411
REGISTERED PROFESSIONAL ENGINEER

Thomas G. Ashcraft
10/9/07

NO.	REVISION	BY	DATE

CP&Y Chiang, Patel & Yerby, Inc.

BEXAR COUNTY
PUBLIC WORKS DIVISION

F.M. 2696 (BLANCO ROAD)

TYPICAL SECTIONS
PANTHER SPRINGS CREEK BRIDGE
STRUCTURE NO. 3

SHEET 1 OF 2

Designed: JTB	STATE	BEXAR COUNTY FILE NUMBER	PLAN SET NO. 549
Checked: TGA	TEXAS		
Drawn: GWS	COUNTY		OF
Checked: TGA	BEXAR	2708-01-022, ETC.	842

pw:/Active Projects/BEX6102/8.00 Plans and Drawings/8.10 Cut Sheets/8.1.02 Bridge/(2) Structure No. 3/6102CABRB721.999
10/9/2007 3:35:51 PM

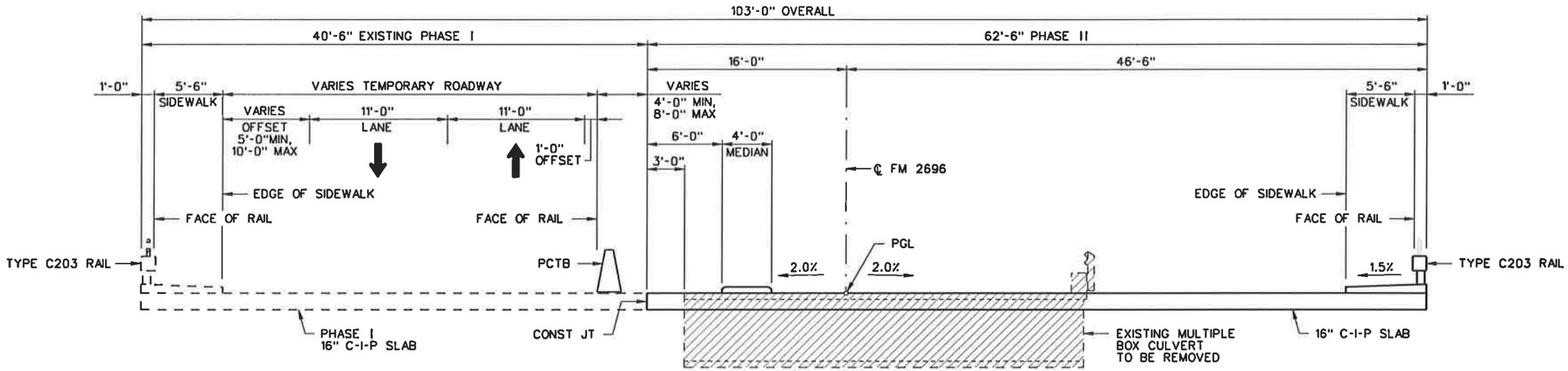

PHASE II CONSTRUCTION

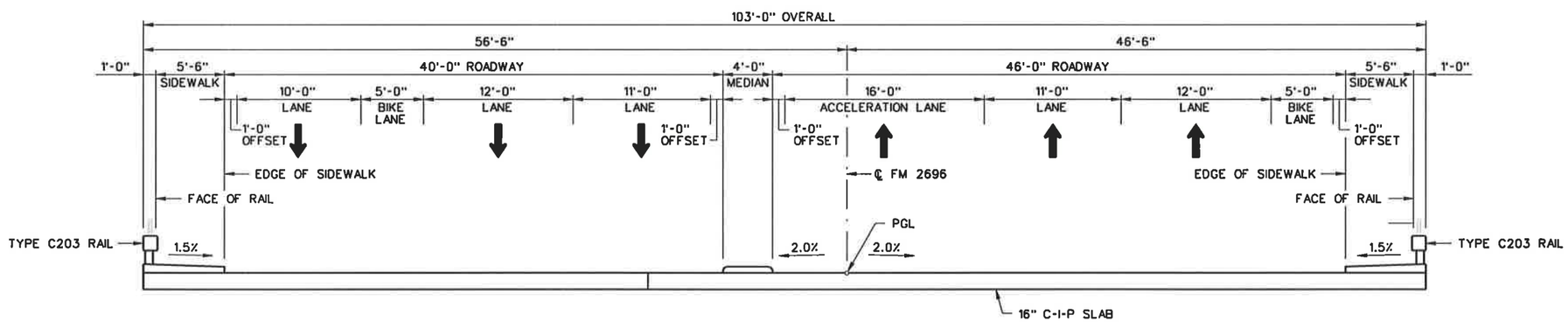

COMPLETED TYPICAL SECTION

STATE OF TEXAS
THOMAS G. ASHCRAFT
81411
REGISTERED
PROFESSIONAL ENGINEER
Thomas G. Ashcraft
10/9/07

NO.	REVISION	BY	DATE

CP&Y Chiang, Patel & Yerby, Inc.

BEXAR COUNTY
PUBLIC WORKS DIVISION

F.M. 2696 (BLANCO ROAD)

TYPICAL SECTIONS
PANTHER SPRINGS CREEK BRIDGE
STRUCTURE NO. 3

SHEET 2 OF 2

Designed: JTB	STATE	BEXAR COUNTY FILE NUMBER	PLAN SET NO. 606
Checked: TGA	TEXAS		OF 842
Drawn: GWS	COUNTY		
Checked: TGA	BEXAR	2708-01-022, ETC.	

pw:/Active Projects/BEX6102/6.00 Plans and Drawings/8.10 Cut Sheets/8.102 Bridge/(2) Structure No. 3/6102CABRBT22.999
10/9/2007 3:36:00 PM

SUMMARY OF ESTIMATED QUANTITIES

PANTHER SPRINGS CREEK BRIDGE STRUCTURE NO. 3											
	ITEM	0416 2002	0420 2003	0420 2004	0420 2035	0420 2033	0450 2016	0428 2001	0432 2015	0496 2001	0442 2005
		DRILLED SHAFTS	CLASS "C" CONCRETE		CLASS "S" CONCRETE		RAILING	CONCRETE SURFACE TREATMENT (CLASS 1)	RIPRAP (STONE COMMON) (6 IN)	REMOVE STRUCTURE (BOX CULVERT)	STRUCTURAL STEEL (MISC)
	DESCRIPTION	24" DIA.	ABUT.	BENT	CIP SLAB SPAN	APPR SLAB	TYPE C203				
		LF	CY	CY	CY	CY	LF	SY	CY	EA	LB
PHASE I	2 - ABUTMENTS	110	29.2			101.5	20		39.2		
	5 - INTERIOR BENTS	120		85.0							
	6 - 25.00' C-I-P CONCRETE SLAB SPANS				322.2		150	677			208
	PHASE TOTAL	230	29.2	85.0	322.2	101.5	170	677	39.2		208
PHASE II	2 - ABUTMENTS	132	42.2			216.5	20		67.5		
	5 - INTERIOR BENTS	150		121.0							
	6 - 25.00' C-I-P CONCRETE SLAB SPANS				496.2		150	1,060			208
	PHASE TOTAL	282	42.2	121.0	496.2	216.5	170	1,060	67.5		208
	TOTAL	512	71.4	206.0	818.4	318.0	340	1,737	106.7	2	416

STATE OF TEXAS
THOMAS W. STEPHENSON
91178
LICENSED
PROFESSIONAL ENGINEER

Thomas W. Stephenson
10/9/07

NO.	REVISION	BY	DATE

CP&Y Chiang, Patel & Yerby, Inc.

BEXAR COUNTY
PUBLIC WORKS DIVISION

F.M. 2696 (BLANCO ROAD)

ESTIMATED QUANTITIES
PANTHER SPRINGS CREEK BRIDGE
STRUCTURE NO. 3

Designed: GLL	STATE	BEXAR COUNTY FILE NUMBER	PLAN SET NO. 601
Checked: TWS	TEXAS		OF 842
Drawn: GWS	COUNTY		
Checked: GLL	BEXAR	2708-01-022, ETC.	

pw:/Active Projects/BEX6102/8.00 Plans and Drawings/8.10 Cut Sheets/8.102 Bridge/(2) Structure No. 3/6102CABRBQ21.999
10/9/2007 3:36:08 PM

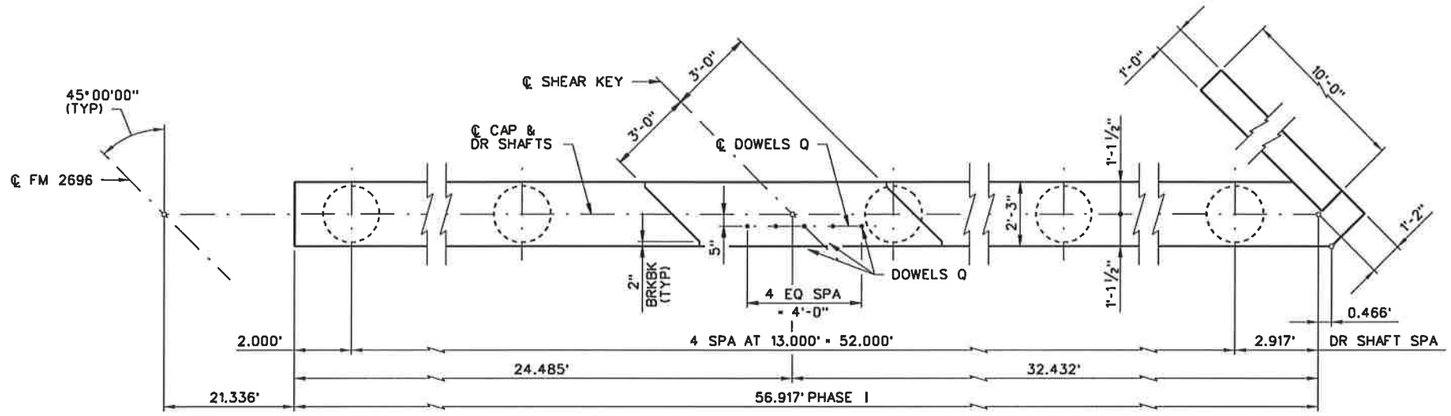

PLAN

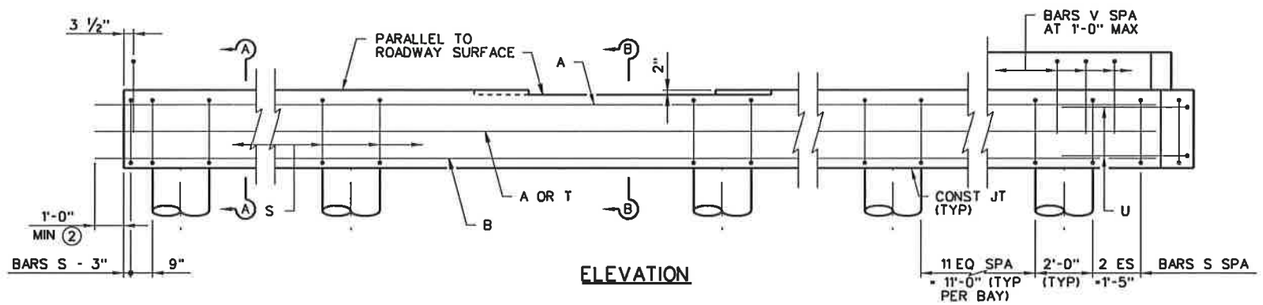

ELEVATION

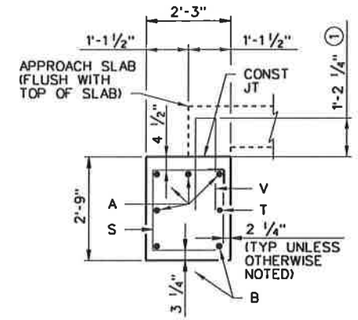

SECTION A-A

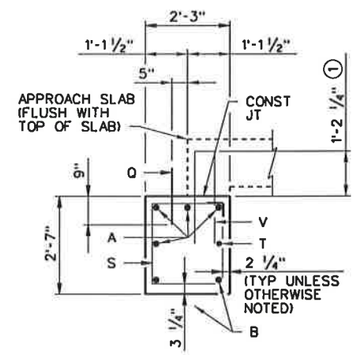

SECTION B-B

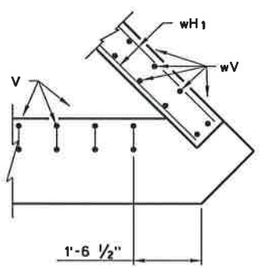

TOP OF CAP

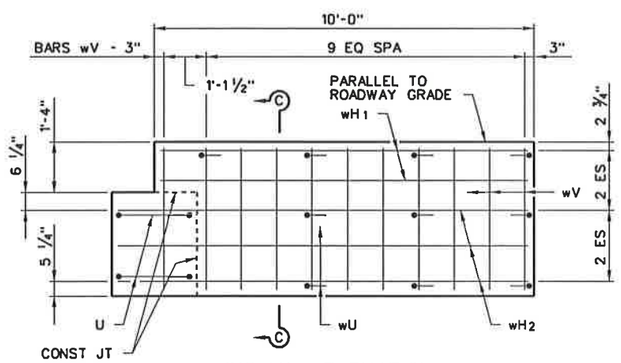

WINGWALL ELEVATION

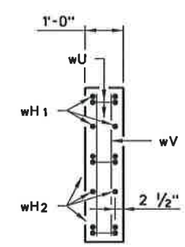

SECTION C-C

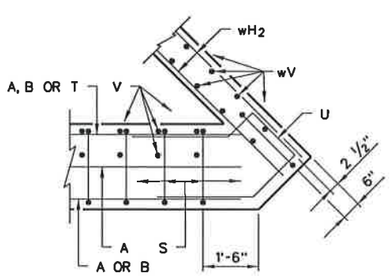

SECTION THRU CAP

CORNER DETAILS

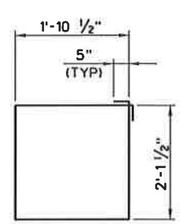

BARS S

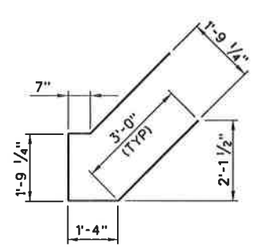

BARS U

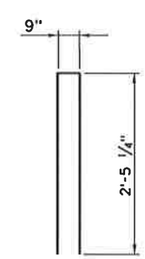

BARS V

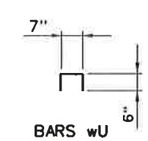

BARS wU

TABLE OF ESTIMATED QUANTITIES

BAR	NO.	SIZE	LENGTH	WEIGHT
A	4	#11	57'-11"	1,231
B	2	#11	57'-11"	615
Q	5	#6	1'- 6"	11
S	54	#4	8'-10"	319
T	1	#5	57'-11"	60
U	2	#6	9'- 8"	29
V	57	#5	5'- 8"	337
wH_1	4	#6	9'- 8"	58
wH_2	6	#6	10'-10"	98
wU	10	#4	1'- 7"	11
wV	22	#5	3'- 9"	86
RE INFORCING STEEL			LB	2,855
CLASS "C" CONCRETE			CY	14.6

(1) INCREASE AS REQUIRED TO MAINTAIN 3 3/4" FROM FINISHED GRADE.

(2) EXTEND BARS A, B & T 1'-0" MIN INTO PHASE II CONSTRUCTION.

GENERAL NOTES:

1. DESIGNED ACCORDING TO 2007 AASHTO LRFD SPECIFICATIONS (HL93 LOADING).
2. CONCRETE STRENGTH f'c = 3,600 psi.
3. ALL REINFORCING TO BE GRADE 60.
4. SEE BRIDGE LAYOUT FOR FOUNDATION TYPE, SIZE AND LENGTH.
5. SEE FOUNDATION DETAIL STANDARD SHEET, FD, FOR ALL FOUNDATION DETAILS AND NOTES.
6. CALCULATED FOUNDATION LOADS = 33 TONS/DR SHAFT

STATE OF TEXAS
THOMAS W. STEPHENSON
91178
LICENSED
PROFESSIONAL ENGINEER

10/9/07

NO.	REVISION	BY	DATE

CP&Y Chiang, Patel & Yerby, Inc.

BEXAR COUNTY PUBLIC WORKS DIVISION

F.M. 2696 (BLANCO ROAD)

ABUTMENT NO. 1
PANTHER SPRINGS CREEK BRIDGE
STRUCTURE NO. 3
PHASE I

Designed: GLL	STATE	BEXAR COUNTY FILE NUMBER	PLAN SET NO. 602
Checked: TWS	TEXAS		OF 842
Drawn: LTT	COUNTY		
Checked: TWS	BEXAR	2708-01-022, ETC.	

pw:/Active Projects/BEX5102/8.00 Plans and Drawings/8.10 Cut Sheets/8.1.02 Bridge/(2) Structure No. 3/6102C4BRBA21.999
10/9/2007 3:34:28 PM

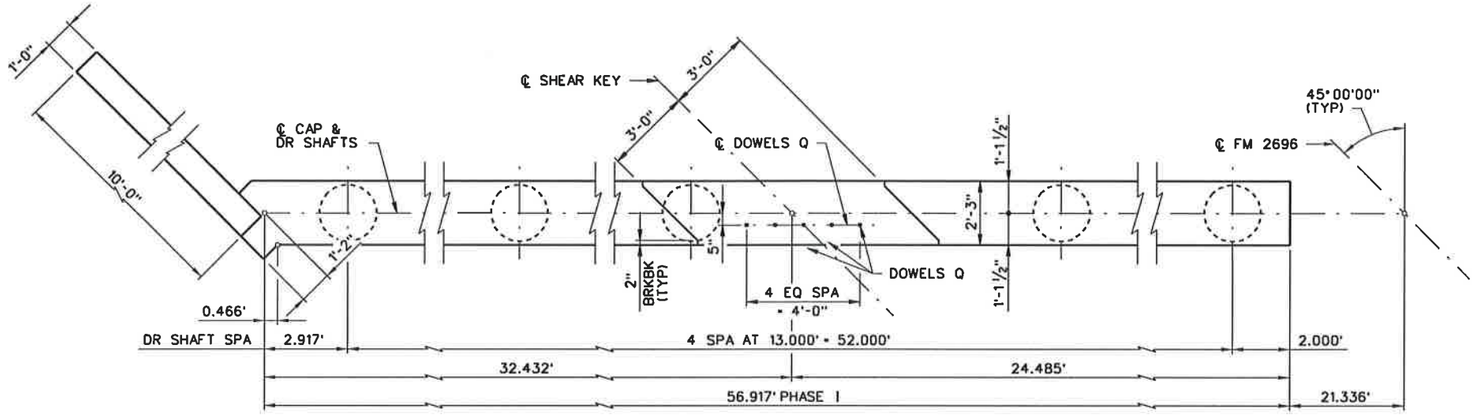

PLAN

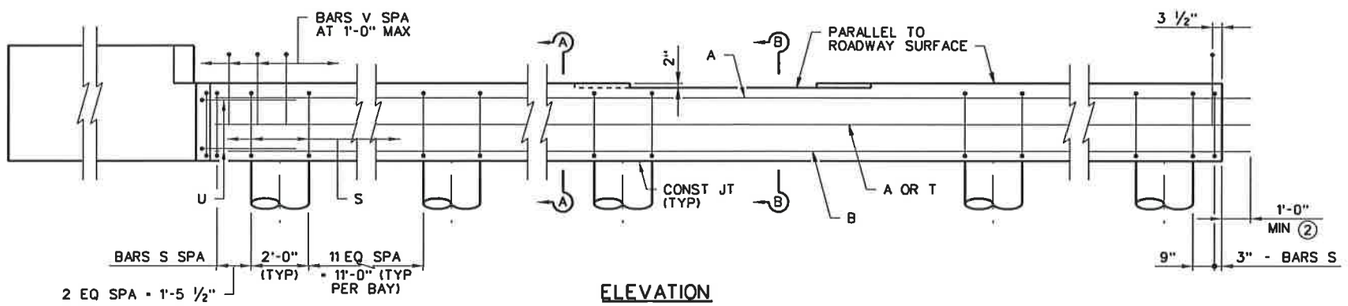

ELEVATION

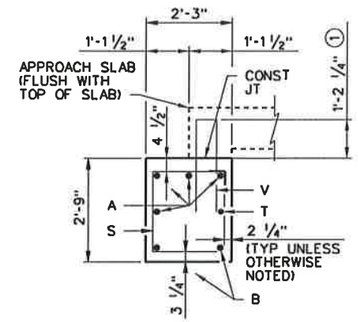

SECTION A-A

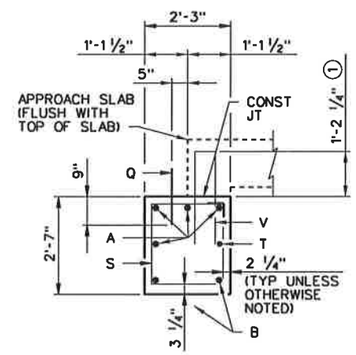

SECTION B-B

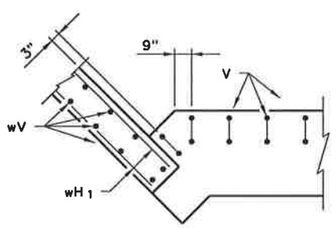

TOP OF CAP

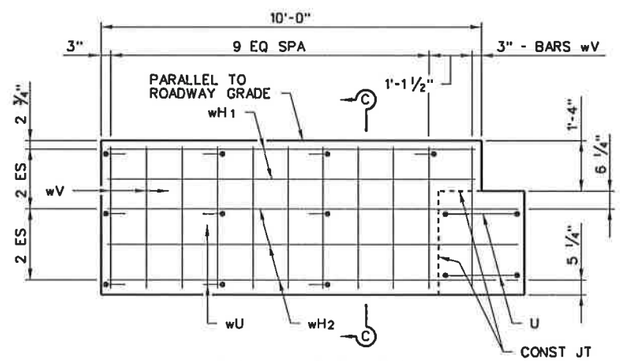

WINGWALL ELEVATION

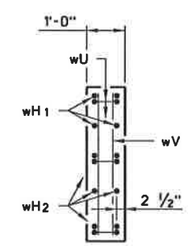

SECTION C-C

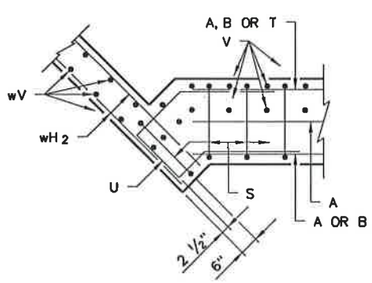

SECTION THRU CAP

CORNER DETAILS

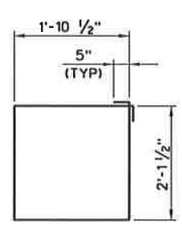

BARS S

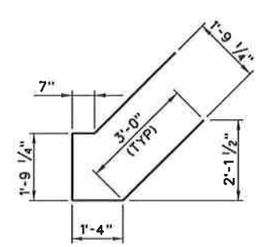

BARS U

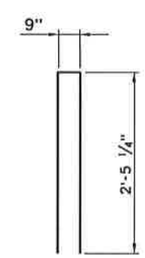

BARS V

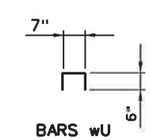

BARS wU

TABLE OF ESTIMATED QUANTITIES

BAR	NO.	SIZE	LENGTH	WEIGHT
A	4	#11	57'-11"	1,231
B	2	#11	57'-11"	615
Q	5	#6	1'- 6"	11
S	54	#4	8'-10"	319
T	1	#5	57'-11"	60
U	2	#6	9'- 8"	29
V	58	#5	5'- 8"	343
wH1	4	#6	9'- 8"	58
wH2	6	#6	10'-10"	98
wU	10	#4	1'- 7"	11
wV	22	#5	3'- 9"	86
RE INFORCING STEEL			LB	2,861
CLASS "C" CONCRETE			CY	14.6

① INCREASE AS REQUIRED TO MAINTAIN 3 ¾" FROM FINISHED GRADE.

② EXTEND BARS A, B & T 1'-0" MIN INTO PHASE II CONSTRUCTION.

GENERAL NOTES:

1. DESIGNED ACCORDING TO 2007 AASHTO LRFD SPECIFICATIONS (HL93 LOADING).
2. CONCRETE STRENGTH f'c = 3,600 psi.
3. ALL REINFORCING TO BE GRADE 60.
4. SEE BRIDGE LAYOUT FOR FOUNDATION TYPE, SIZE AND LENGTH.
5. SEE FOUNDATION DETAIL STANDARD SHEET, FD, FOR ALL FOUNDATION DETAILS AND NOTES.
6. CALCULATED FOUNDATION LOADS = 33 TONS/DR SHAFT.

STATE OF TEXAS
THOMAS W. STEPHENSON
91178
LICENSED
PROFESSIONAL ENGINEER

Thomas W. Stephenson
10/9/07

NO.	REVISION	BY	DATE

CP&Y Chiang, Patel & Yerby, Inc.

BEXAR COUNTY
PUBLIC WORKS DIVISION

F.M. 2696 (BLANCO ROAD)
ABUTMENT NO. 7
PANTHER SPRINGS CREEK BRIDGE
STRUCTURE NO. 3
PHASE I

Designed: GLL	STATE	BEXAR COUNTY FILE NUMBER	PLAN SET NO. 603
Checked: TWS	TEXAS		
Drawn: LTT	COUNTY		OF 842
Checked: TWS	BEXAR	2708-01-022, ETC.	

pw:/Active Projects/BEX6102/8.00 Plans and Drawings/8.10 Cut Sheets/8.102 Bridge/(2) Structure No. 3/6102C4BRBA23.999
10/9/2007 3:34:47 PM

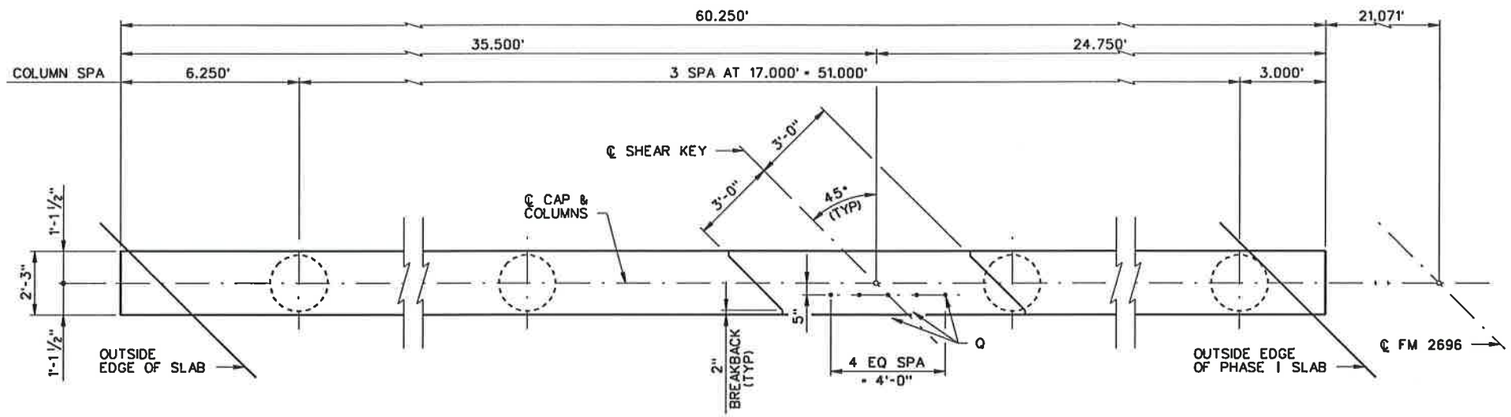

PLAN

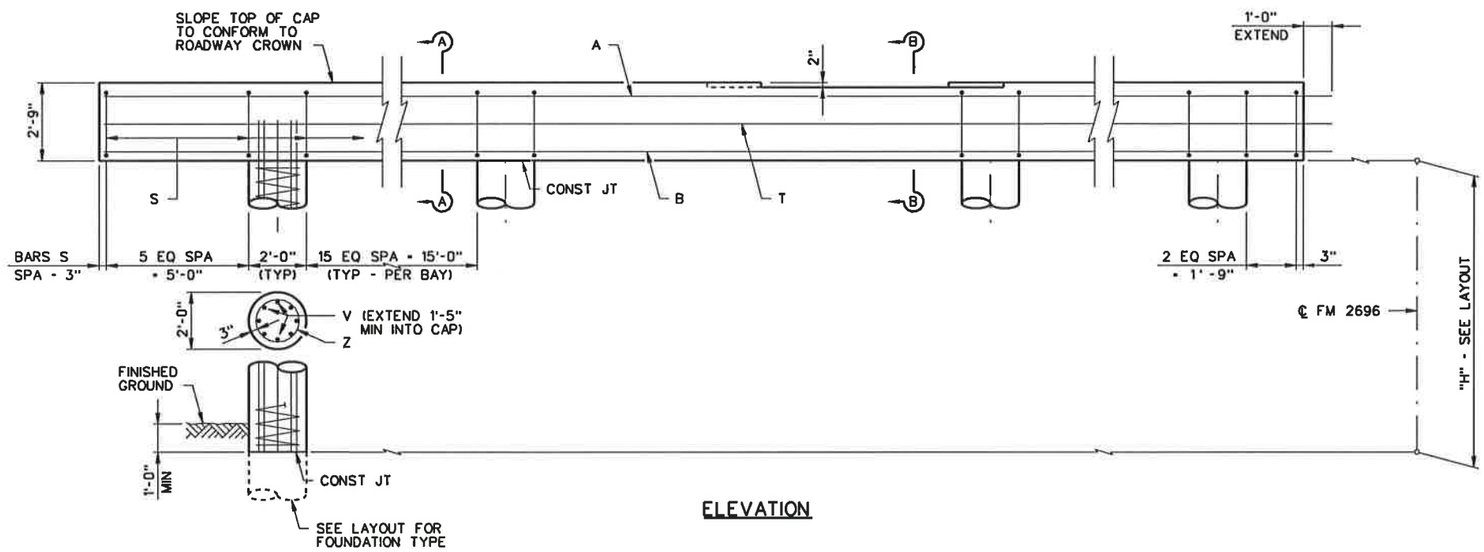

ELEVATION

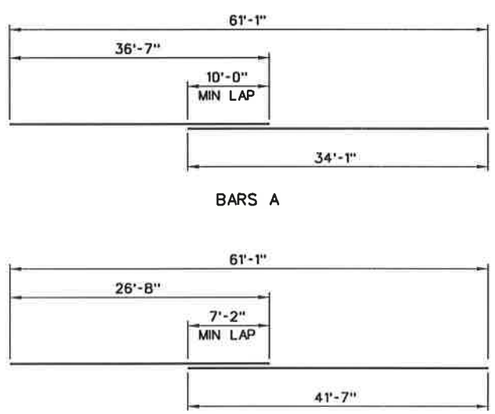

BARS A

BARS B

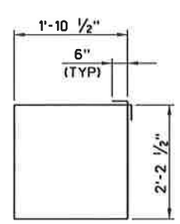

BARS S

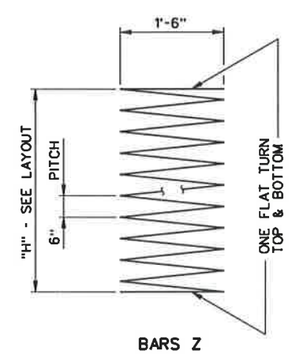

BARS Z

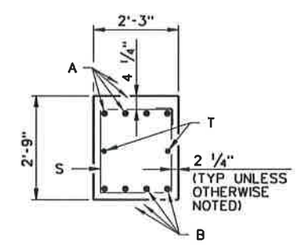

SECTION A-A

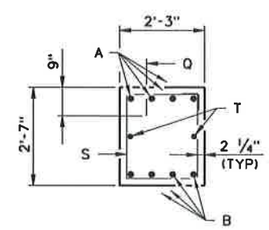

SECTION B-B

① TABLE OF ESTIMATED QUANTITIES

BAR	NO.	SIZE	LENGTH	WEIGHT
A	4	#11	71'- 1"	1,511
B	4	#11	68'- 3"	1,450
O	5	#6	1'- 6"	11
S	57	#5	9'- 2"	545
② T	2	#5	62'- 4"	130
REINFORCING STEEL			LB	3,647
CLASS "C" CONCRETE			CY	13.7

③ TABLE OF COLUMN QUANTITIES / ④ TOTAL ESTIMATED QUANTITIES

BENT	"H"	CLASS "C" CONCRETE (COLUMN)	BARS V 32 - #7		BARS Z 4 - #3 SPIRAL		④ TOTAL ESTIMATED QUANTITIES: REINF STEEL	④ TOTAL ESTIMATED QUANTITIES: CLASS "C" CONCRETE
NO.	FT	CY	LENGTH	WEIGHT	LENGTH	WEIGHT	LB	CY
2-6	7	3.3	8'- 5"	551	75'- 9"	114	4,312	17.0

① QUANTITIES SHOWN ARE FOR ONE BENT ONLY.

② LENGTH SHOWN INCLUDEDS ONE 1'-3" LAP SPLICE.

③ ADJUST BARS V LENGTH BY 1 FT AND BARS Z LENGTH BY 9.477' FOR EACH LINEAR FOOT OF VARIATION IN "H" VALUE.

④ ADJUST REINFORCING STEEL TOTAL BY 79.7 LB AND CLASS "C" CONCRETE TOTAL BY 0.4656 CY FOR EACH 1 LINEAR FOOT OF VARIATION IN "H" VALUE.

GENERAL NOTES:

1. DESIGNED ACCORDING TO 2007 AASHTO LRFD SPECIFICATIONS (HL93 LOADING).
2. CONCRETE STRENGTH f'c = 3,600 psi.
3. ALL REINFORCING TO BE GRADE 60.
4. SEE BRIDGE LAYOUT FOR FOUNDATION TYPE, SIZE AND LENGTH.
5. SEE FOUNDATION DETAIL STANDARD SHEET, FD, FOR ALL FOUNDATION DETAILS AND NOTES.
6. CALCULATED FOUNDATION LOAD = 59 TONS/DR SHAFT.

STATE OF TEXAS
THOMAS W. STEPHENSON
91178
LICENSED PROFESSIONAL ENGINEER

10/9/07

NO.	REVISION	BY	DATE

CP&Y Chiang, Patel & Yerby, Inc.

BEXAR COUNTY PUBLIC WORKS DIVISION

F.M. 2696 (BLANCO ROAD)

INTERIOR BENT NOS. 2-6
PANTHER SPRINGS CREEK BRIDGE
STRUCTURE NO. 3
PHASE I

Designed: GLL	STATE	BEXAR COUNTY FILE NUMBER	PLAN SET NO. 604
Checked: TWS	TEXAS		OF 842
Drawn: LTT	COUNTY		
Checked: TWS	BEXAR	2708-01-022, ETC.	

pw:/Active Projects/BEX6102/8.00 Plans and Drawings/8.10 Cut Sheets/8.1.02 Bridge/(2) Structure No. 3/6102CABGBB21.999
10/9/2007 3:35:19 PM

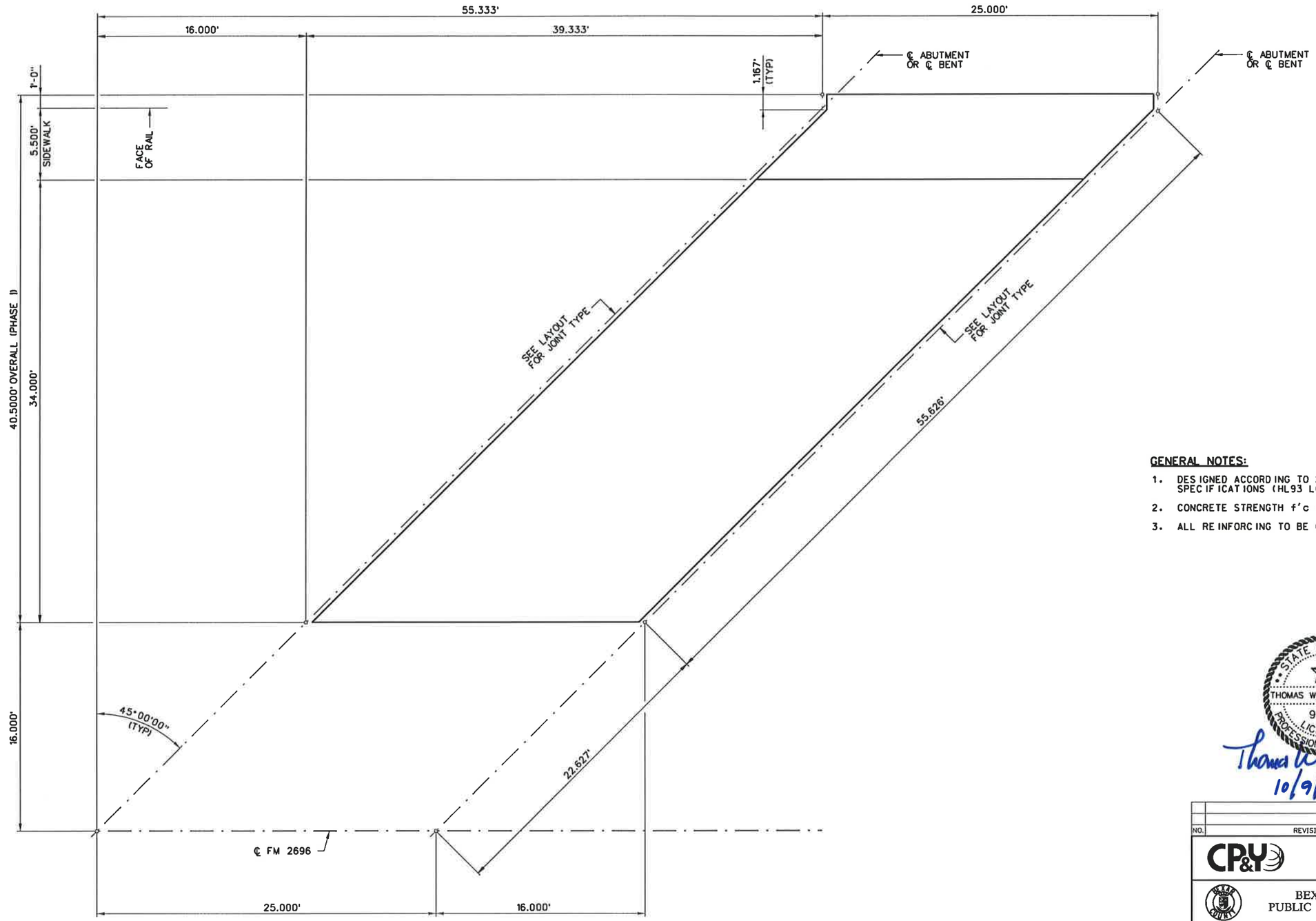

PLAN SHOWING DIMENSIONS

GENERAL NOTES:

1. DESIGNED ACCORDING TO 2007 AASHTO LRFD SPECIFICATIONS (HL93 LOADING).
2. CONCRETE STRENGTH f'c = 4,000 psi.
3. ALL REINFORCING TO BE GRADE 60.

STATE OF TEXAS
THOMAS W. STEPHENSON
91178
LICENSED
PROFESSIONAL ENGINEER

Thomas W. Stephenson
10/9/07

NO.	REVISION	BY	DATE

CP&Y Chiang, Patel & Yerby, Inc.

BEXAR COUNTY
PUBLIC WORKS DIVISION

F.M. 2696 (BLANCO ROAD)

25.00' C-I-P CONCRETE SLAB SPAN
PANTHER SPRINGS CREEK BRIDGE
STRUCTURE NO. 3
PHASE I SHEET 1 OF 3

Designed: GLL	STATE	BEXAR COUNTY FILE NUMBER	PLAN SET NO. 605
Checked: TWS	TEXAS		
Drawn: MCB	COUNTY		OF 842
Checked: TWS	BEXAR	2708-01-022, ETC.	

pw:/Active Projects/BEX6102/8.00 Plans and Drawings/8.10 Cut Sheets/8.102 Bridge/(2) Structure No. 3/6102CABRGS21999
10/9/2007 3:33:40 PM

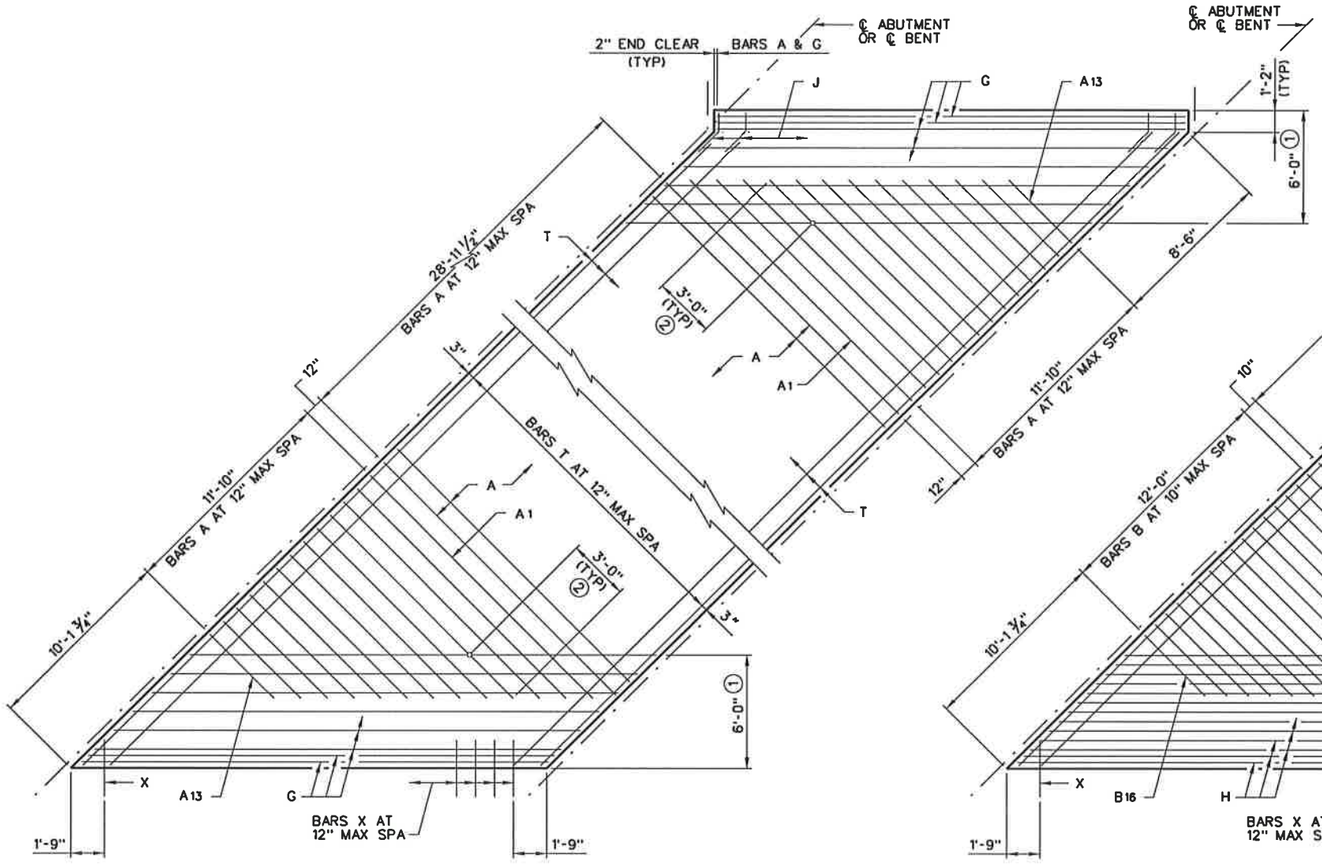

PLAN SHOWING TOP REINFORCING
(SIDEWALK REINFORCING NOT SHOWN FOR CLARITY)

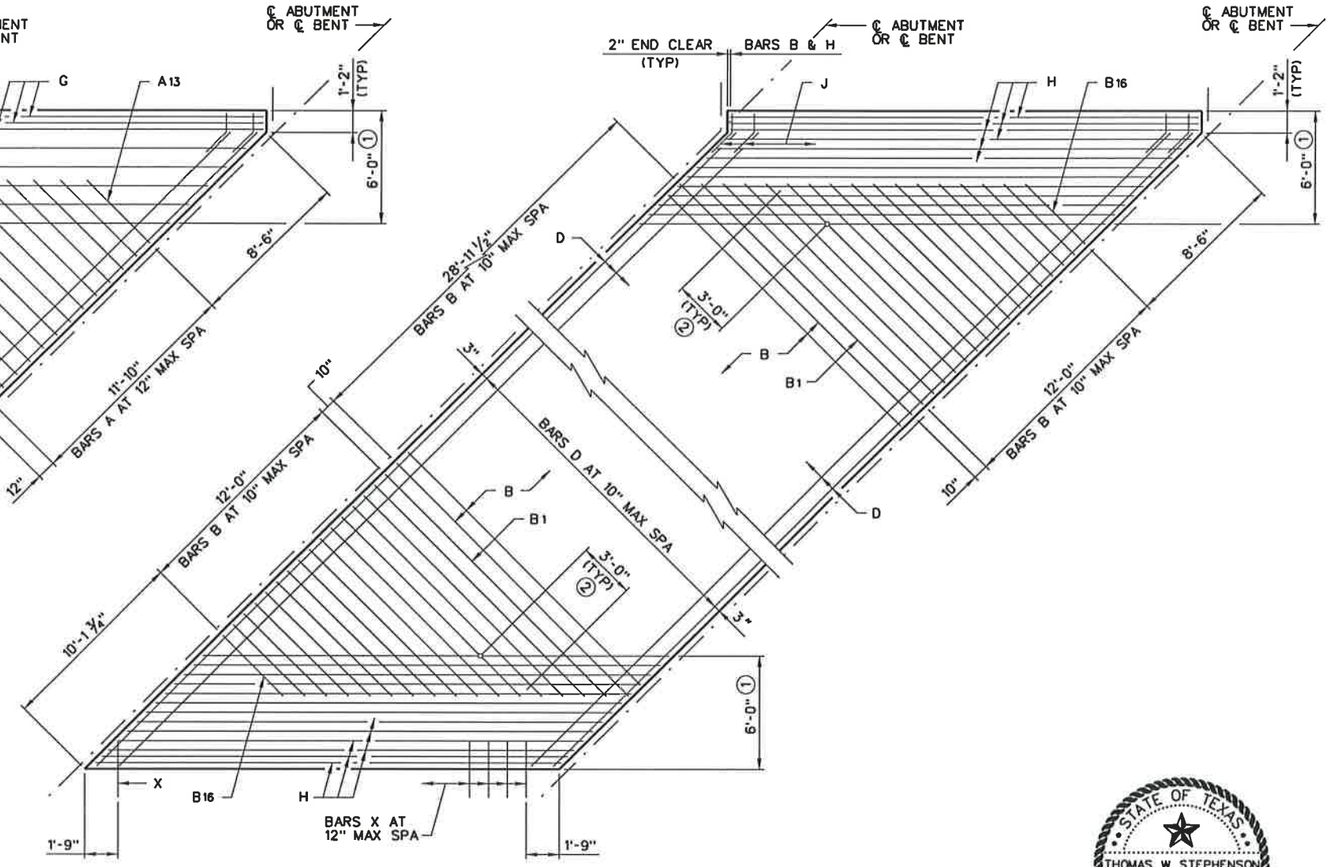

PLAN SHOWING BOTTOM REINFORCING
(SIDEWALK REINFORCING NOT SHOWN FOR CLARITY)

① SEE TYPICAL TRANSVERSE SECTION, SHEET 3 OF 3, FOR BARS G & H SPACING.

② BARS A1-13 & B1-16

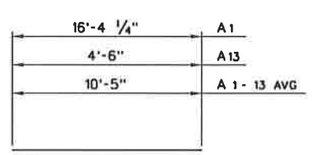

BARS A

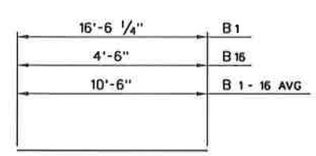

BARS B

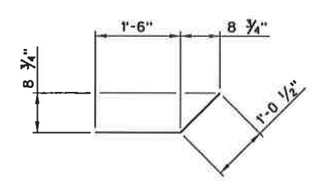

BARS J

STATE OF TEXAS
THOMAS W. STEPHENSON
91178
LICENSED PROFESSIONAL ENGINEER

Thomas W. Stephenson
10/9/07

NO.	REVISION	BY	DATE

CP&Y Chiang, Patel & Yerby, Inc.

BEXAR COUNTY
PUBLIC WORKS DIVISION

F.M. 2696 (BLANCO ROAD)

25.00' C-I-P CONCRETE SLAB SPAN
PANTHER SPRINGS CREEK BRIDGE
STRUCTURE NO. 3
PHASE I SHEET 2 OF 3

Designed: GLL	STATE	BEXAR COUNTY FILE NUMBER	PLAN SET NO. 606
Checked: TWS	TEXAS		
Drawn: GWS	COUNTY		OF 842
Checked: TWS	BEXAR	2708-01-022, ETC.	

pw:/Active Projects/BEX6102/B.00 Plans and Drawings/B.10 Cut Sheets/B.1.02 Bridge/(2) Structure No. 3/6102CABRBS22.999
10/9/2007 3:33:48 PM

③ TABLE OF ESTIMATED QUANTITIES

BAR	NO.	SIZE	LENGTH	WEIGHT
A	30	#4	17'- 4"	347
A 1-13	26	#4	10'- 5"AV	181
B	36	#8	17'- 4"	1,666
B 1-16	32	#8	10'- 6"AV	897
D	22	#4	55'- 5"	814
G	18	#4	24'- 8"	297
H	26	#8	24'- 8"	1,713
J	41	#4	2'- 7"	71
T	19	#4	55'- 5"	703
X	23	#8	3'- 0"	184
Z1	18	#4	2'- 7"	31
Z2	18	#4	2'-11"	35

④	RE INFORCING STEEL	LB	7,018
	CLASS "S" CONCRETE	CY	53.7

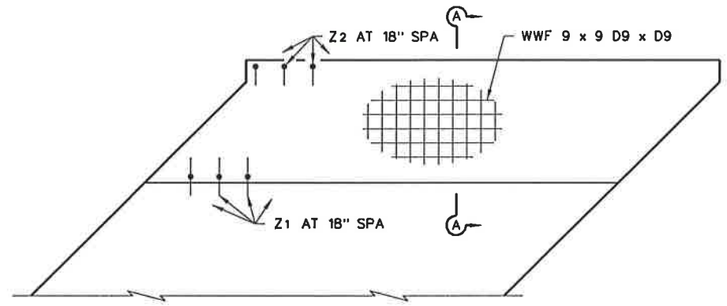

SIDEWALK DETAIL

① LOCATE BARS G BELOW BARS T WHERE NECESSARY TO AVOID CONFLICT WITH BARS A.

② LOCATE BARS H ABOVE BARS D WHERE NECESSARY TO AVOID CONFLICT WITH BARS B.

③ QUANTITIES SHOWN ARE FOR ONE SPAN.

④ REINFORCING WEIGHT SHOWN INCLUDES 79 lbs FOR WELDED WIRE FABRIC.

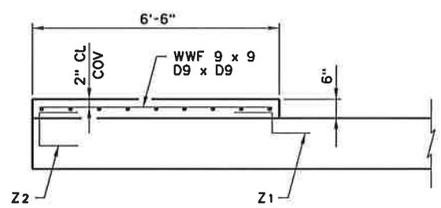

SECTION A-A

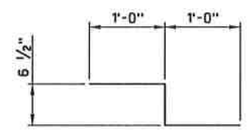

BARS Z1

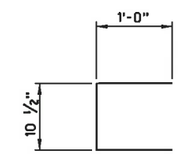

BARS Z2

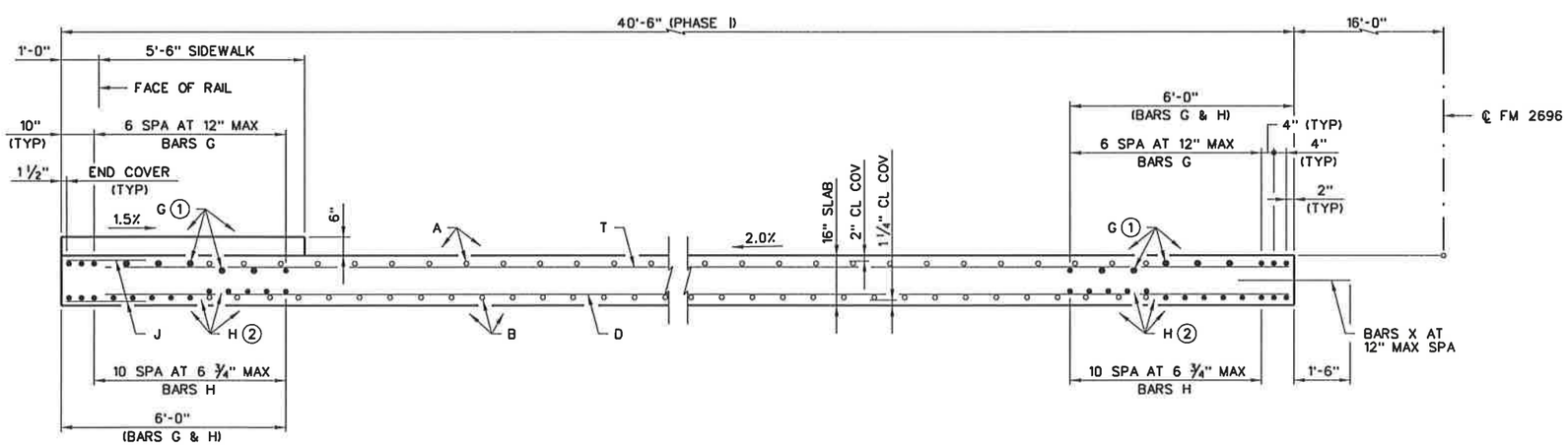

TYPICAL TRANSVERSE SECTION

(SIDEWALK REINFORCING NOT SHOWN FOR CLARITY)

STATE OF TEXAS
THOMAS W. STEPHENSON
91178
LICENSED
PROFESSIONAL ENGINEER

Thomas W. Stephenson
10/9/07

NO.	REVISION	BY	DATE

CP&Y Chiang, Patel & Yerby, Inc.

BEXAR COUNTY
PUBLIC WORKS DIVISION

F.M. 2696 (BLANCO ROAD)

25.00' C-I-P CONCRETE SLAB SPAN
PANTHER SPRINGS CREEK BRIDGE
STRUCTURE NO. 3
PHASE I SHEET 3 OF 3

Designed: GLL	STATE	BEXAR COUNTY FILE NUMBER	PLAN SET NO.	
Checked: TWS	TEXAS		007	
Drawn: GWS	COUNTY		OF	
Checked: TWS	BEXAR	2708-01-022, ETC.	842	

pw:/Active Projects/BEX6102/8.00 Plans and Drawings/8.10 Cut Sheets/8.102 Bridge/(2) Structure No. 3/6102CABRBS23.999
10/9/2007 4:00:48 PM

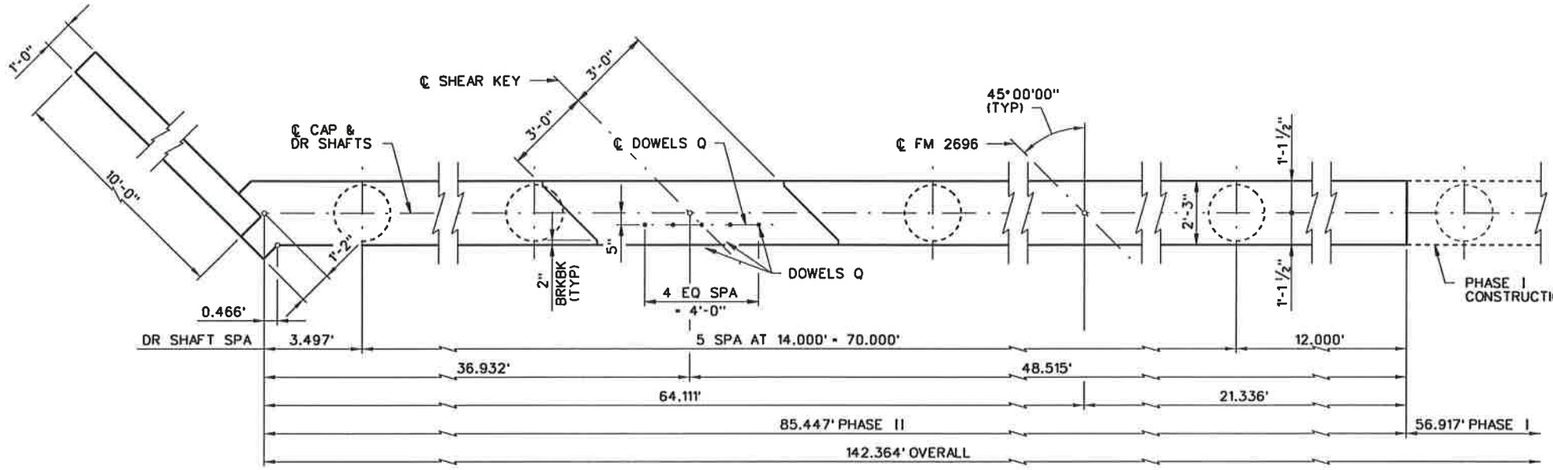

PLAN

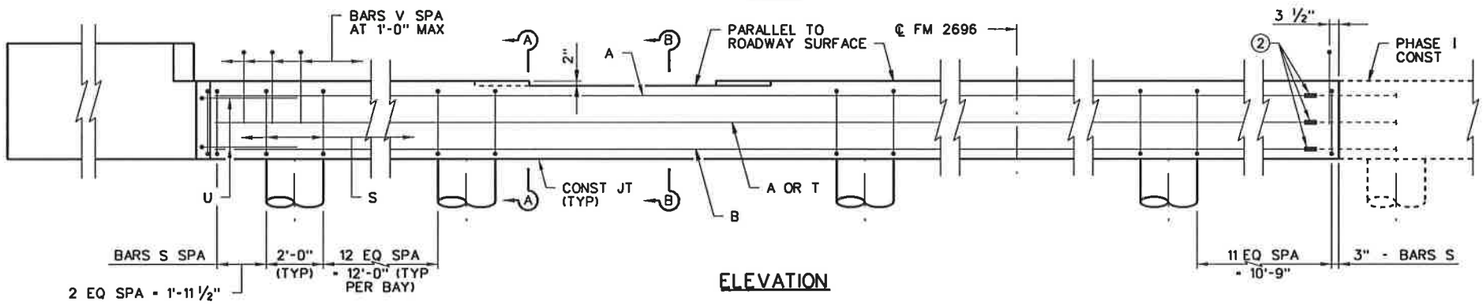

ELEVATION

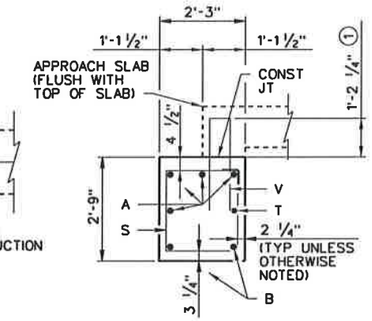

SECTION A-A

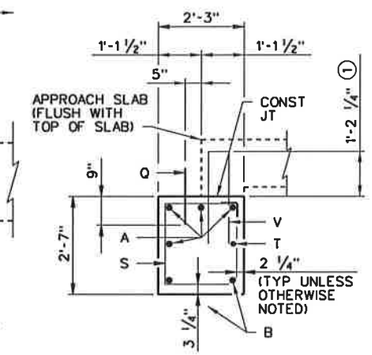

SECTION B-B

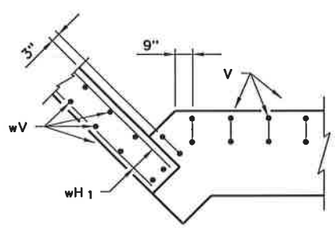

TOP OF CAP

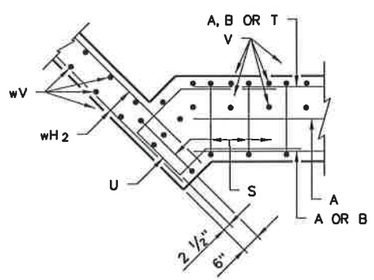

SECTION THRU CAP

CORNER DETAILS

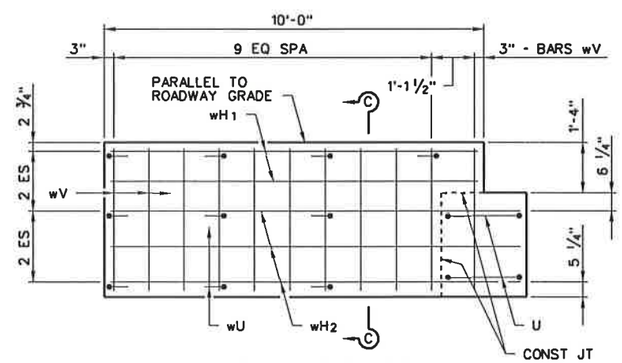

WINGWALL ELEVATION

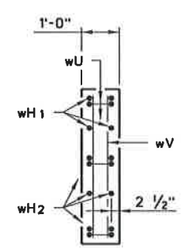

SECTION C-C

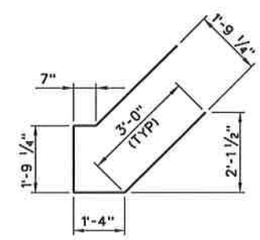

BARS U

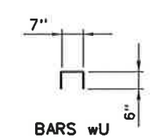

BARS wU

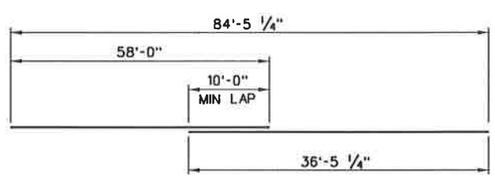

BARS A

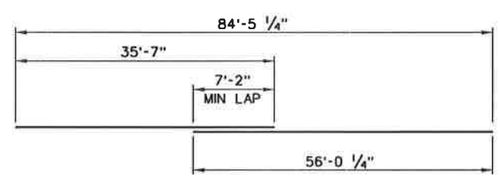

BARS B

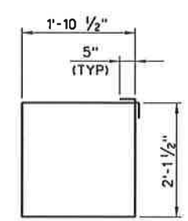

BARS S

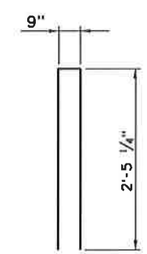

BARS V

TABLE OF ESTIMATED QUANTITIES

BAR	NO.	SIZE	LENGTH	WEIGHT
A	4	#11	94'- 5"	2,007
B	2	#11	91'- 7"	973
Q	5	#6	1'- 6"	11
S	81	#4	8'-10"	478
③ T	1	#5	85'- 8"	89
U	2	#6	9'- 8"	29
V	86	#5	5'- 8"	508
wH_1	4	#6	9'- 8"	58
wH_2	6	#6	10'-10"	98
wU	10	#4	1'- 7"	11
wV	22	#5	3'- 9"	86
RE INFORCING STEEL			LB	4,348
CLASS "C" CONCRETE			CY	21.1

① INCREASE AS REQUIRED TO MAINTAIN 3 3/4" FROM FINISHED GRADE.

② SPLICE BARS A, B & T BY WELDING IN ACCORDANCE WITH ITEM 448 "STRUCTURAL FIELD WELDING", OR BY USING CLASS "B" MECHANICAL COUPLERS.

③ LENGTH SHOWN INCLUDES ONE 1'-3" LAP SPLICE.

GENERAL NOTES:

1. DESIGNED ACCORDING TO 2007 AASHTO LRFD SPECIFICATIONS (HL93 LOADING).
2. CONCRETE STRENGTH f'c = 3,600 psi.
3. ALL REINFORCING TO BE GRADE 60.
4. SEE BRIDGE LAYOUT FOR FOUNDATION TYPE, SIZE AND LENGTH.
5. SEE FOUNDATION DETAIL STANDARD SHEET, FD, FOR ALL FOUNDATION DETAILS AND NOTES.
6. CALCULATED FOUNDATION LOADS = 33 TONS/DR SHAFT.

STATE OF TEXAS
THOMAS W. STEPHENSON
91178
LICENSED
PROFESSIONAL ENGINEER

Thomas W. Stephenson
10/9/07

NO.	REVISION	BY	DATE

CP&Y Chiang, Patel & Yerby, Inc.

BEXAR COUNTY
PUBLIC WORKS DIVISION

F.M. 2696 (BLANCO ROAD)

ABUTMENT NO. 1
PANTHER SPRINGS CREEK BRIDGE
STRUCTURE NO. 3
PHASE II

Designed: GLL	STATE	BEXAR COUNTY FILE NUMBER	PLAN SET NO. 608
Checked: TWS	TEXAS		
Drawn: LTT	COUNTY		OF 842
Checked: TWS	BEXAR	2708-01-022, ETC.	

pw:/Active Projects/BEX6102/8.00 Plans and Drawings/8.10 Cut Sheets/8.102 Bridge/(2) Structure No. 3/6102C4BRB022.999
10/9/2007 3:34:37 PM

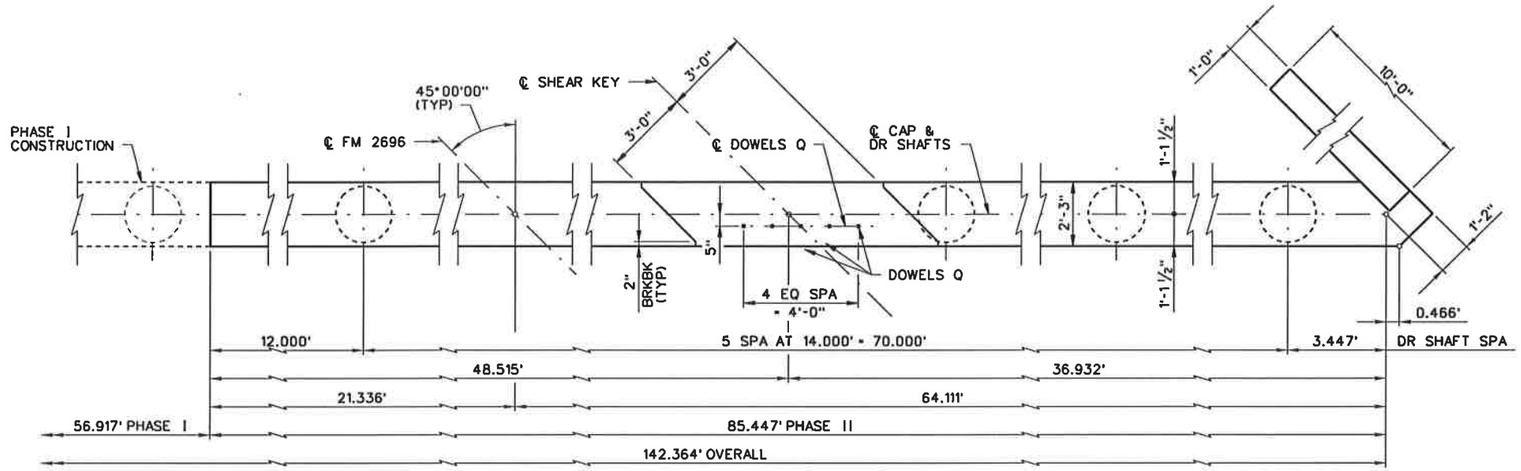

PLAN

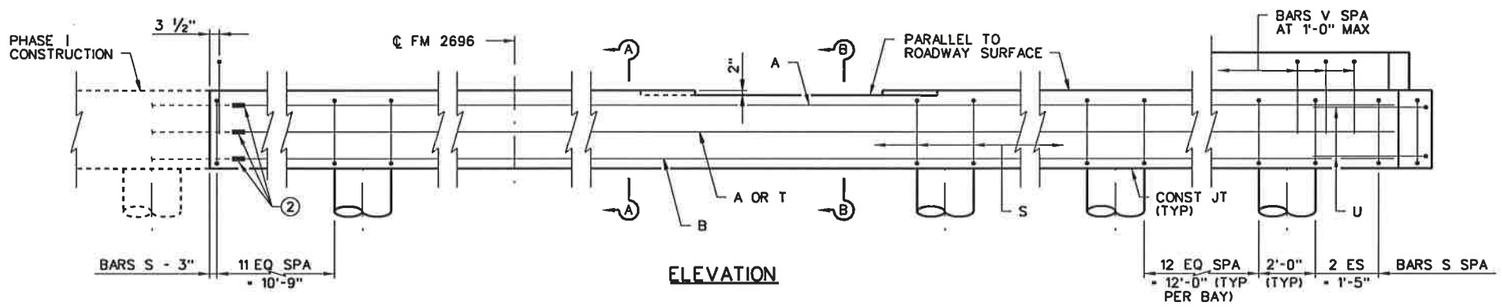

ELEVATION

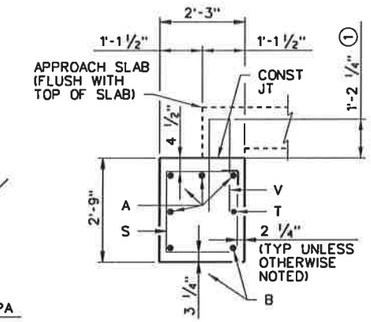

SECTION A-A

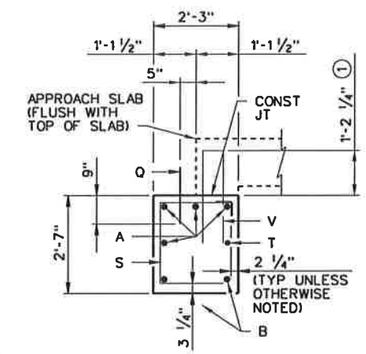

SECTION B-B

TABLE OF ESTIMATED QUANTITIES				
BAR	NO.	SIZE	LENGTH	WEIGHT
A	4	#11	94'- 5"	2,007
B	2	#11	91'- 7"	973
Q	5	#6	1'- 6"	11
S	81	#4	8'-10"	478
③ T	1	#5	85'- 8"	89
U	2	#6	9'- 8"	29
V	86	#5	5'- 8"	508
wH_1	4	#6	9'- 8"	58
wH_2	6	#6	10'-10"	98
wU	10	#4	1'- 7"	11
wV	22	#5	3'- 9"	86
RE INFORCING STEEL			LB	4,348
CLASS "C" CONCRETE			CY	21.1

① INCREASE AS REQUIRED TO MAINTAIN 3 3/4" FROM FINISHED GRADE.

② SPLICE BARS A, B & T BY WELDING IN ACCORDANCE WITH ITEM 448 "STRUCTURAL FIELD WELDING", OR BY USING CLASS "B" MECHANICAL COUPLERS.

③ LENGTH SHOWN INCLUDES ONE 1'-3" LAP SPLICE.

GENERAL NOTES:

1. DESIGNED ACCORDING TO 2007 AASHTO LRFD SPECIFICATIONS (HL93 LOADING).
2. CONCRETE STRENGTH f'c = 3,600 psi.
3. ALL REINFORCING TO BE GRADE 60.
4. SEE BRIDGE LAYOUT FOR FOUNDATION TYPE, SIZE AND LENGTH.
5. SEE FOUNDATION DETAIL STANDARD SHEET, FD, FOR ALL FOUNDATION DETAILS AND NOTES.
6. CALCULATED FOUNDATION LOADS = 33 TONS/DR SHAFT.

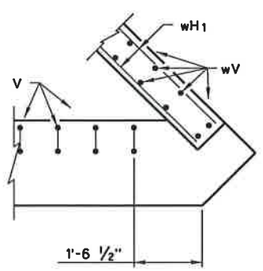

TOP OF CAP

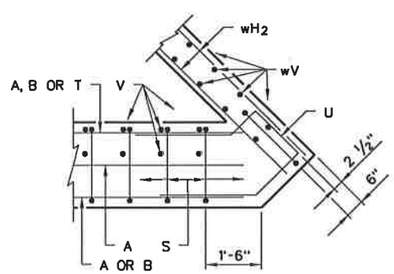

SECTION THRU CAP

CORNER DETAILS

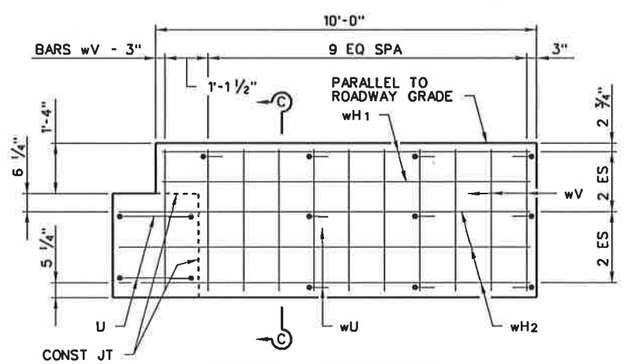

WINGWALL ELEVATION

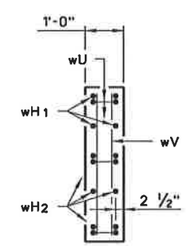

SECTION C-C

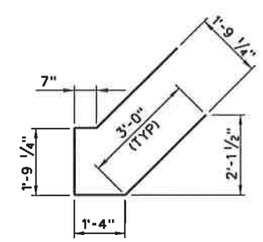

BARS U

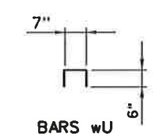

BARS wU

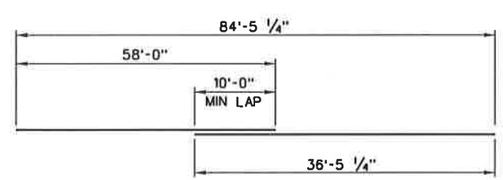

BARS A

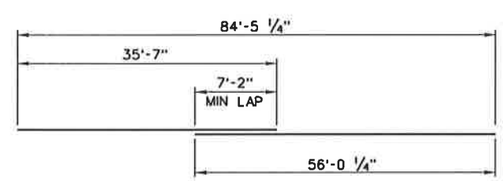

BARS B

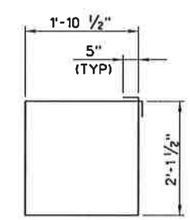

BARS S

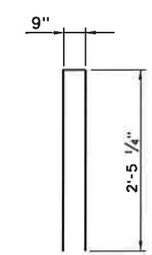

BARS V

STATE OF TEXAS
THOMAS W. STEPHENSON
91178
LICENSED PROFESSIONAL ENGINEER

Thomas W. Stephenson
10/9/07

NO.	REVISION	BY	DATE

CP&Y Chiang, Patel & Yerby, Inc.

BEXAR COUNTY PUBLIC WORKS DIVISION

F.M. 2696 (BLANCO ROAD)

ABUTMENT NO. 7
PANTHER SPRINGS CREEK BRIDGE
STRUCTURE NO. 3
PHASE II

Designed: GLL	STATE	BEXAR COUNTY FILE NUMBER	PLAN SET NO. 609
Checked: TWS	TEXAS		OF 842
Drawn: LTT	COUNTY		
Checked: TWS	BEXAR	2708-01-022, ETC.	

pw://Active Projects/BEX6102/8.00 Plans and Drawings/8.10 Cut Sheets/8.1.02 Bridge/(2) Structure No. 3/6102CABRBA24.999
10/9/2007 3:34:55 PM

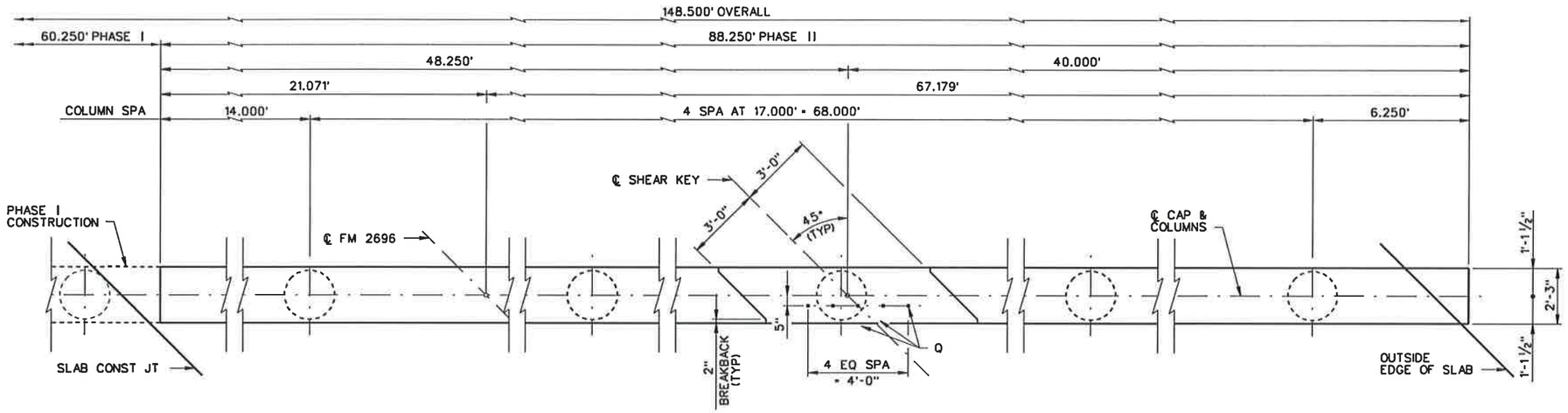

PLAN

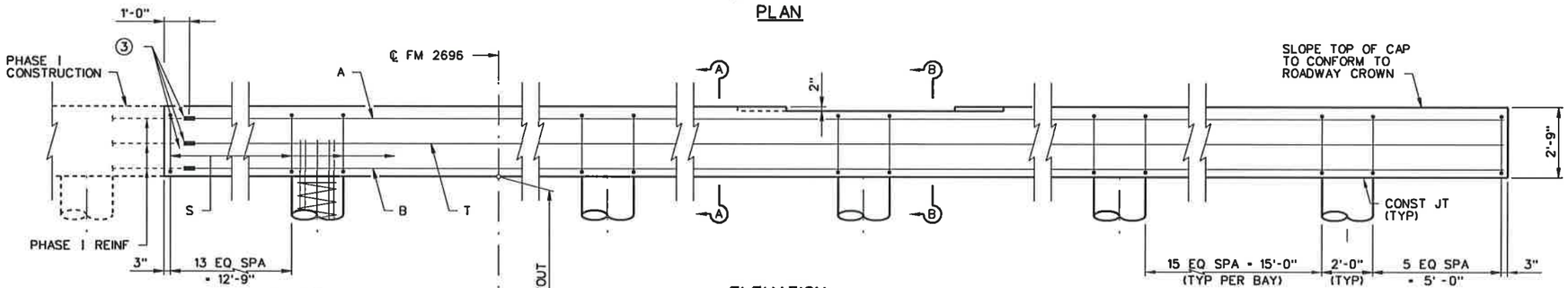

ELEVATION

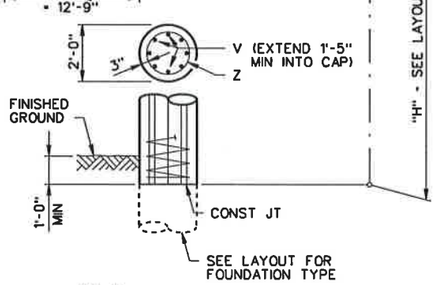

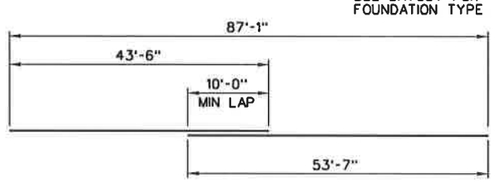

BARS A

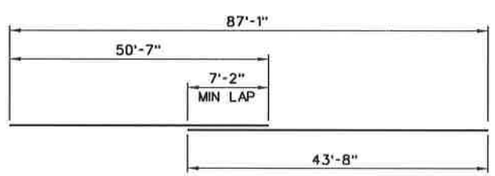

BARS B

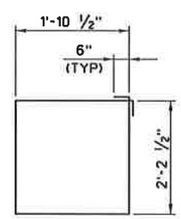

BARS S

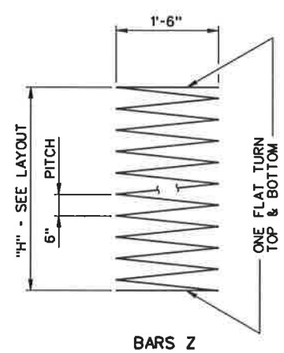

BARS Z

① TABLE OF ESTIMATED QUANTITIES

BAR	NO.	SIZE	LENGTH	WEIGHT
A	4	#11	97'- 1"	2,063
B	4	#11	94'- 3"	2,003
Q	5	#6	1'- 6"	11
S	84	#5	9'- 2"	803
② T	2	#5	88'- 4"	184
REINFORCING STEEL			LB	5,064
CLASS "C" CONCRETE			CY	20.1

① QUANTITIES SHOWN ARE FOR ONE BENT ONLY.

② LENGTH SHOWN INCLUDES ONE 1'-3" LAP SPLICE.

③ SPLICE BARS A, B & T BY WELDING IN ACCORDANCE WITH ITEM 448 "STRUCTURAL FIELD WELDING" OR BY USING CLASS "B" MECHANICAL COUPLERS.

④ TABLE OF COLUMN QUANTITIES / ⑤ TOTAL ESTIMATED QUANTITIES

BENT	"H"	CLASS "C" CONCRETE (COLUMN)	BARS V 40 - #7		BARS Z 5 - #3 SPIRAL		⑤ TOTAL ESTIMATED QUANTITIES	
							REINF STEEL	CLASS "C" CONCRETE
NO.	FT	CY	LENGTH	WEIGHT	LENGTH	WEIGHT	LB	CY
2-6	7	4.1	8'- 5"	688	75'- 9"	142	5,894	24.2

④ ADJUST BARS V LENGTH BY 1 FT AND BARS Z LENGTH BY 9.477' FOR EACH LINEAR FOOT OF VARIATION IN "H" VALUE.

⑤ ADJUST REINFORCING STEEL TOTAL BY 99.6 LB AND CLASS "C" CONCRETE TOTAL BY 0.5820 CY FOR EACH 1 LINEAR FOOT OF VARIATION IN "H" VALUE.

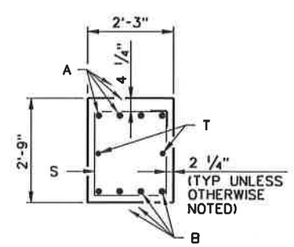

SECTION A-A

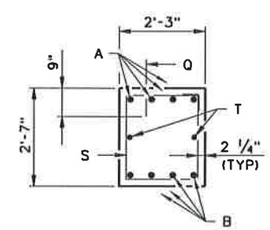

SECTION B-B

GENERAL NOTES:

1. DESIGNED ACCORDING TO 2007 AASHTO LRFD SPECIFICATIONS (HL93 LOADING).
2. CONCRETE STRENGTH f'c = 3,600 psi.
3. ALL REINFORCING TO BE GRADE 60.
4. SEE BRIDGE LAYOUT FOR FOUNDATION TYPE, SIZE AND LENGTH.
5. SEE FOUNDATION DETAIL STANDARD SHEET, FD, FOR ALL FOUNDATION DETAILS AND NOTES.
6. CALCULATED FOUNDATION LOAD = 59 TONS/DR SHAFT.

STATE OF TEXAS
THOMAS W. STEPHENSON
91178
LICENSED
PROFESSIONAL ENGINEER

Thomas W. Stephenson
10/9/07

NO.	REVISION	BY	DATE

CP&Y Chiang, Patel & Yerby, Inc.

BEXAR COUNTY
PUBLIC WORKS DIVISION

F.M. 2696 (BLANCO ROAD)

INTERIOR BENT NOS. 2-6
PANTHER SPRINGS CREEK BRIDGE
STRUCTURE NO. 3
PHASE II

Designed: GLL	STATE	BEXAR COUNTY FILE NUMBER	PLAN SET NO. 610
Checked: TWS	TEXAS		
Drawn: LTT	COUNTY		OF
Checked: TWS	BEXAR	2708-01-022, ETC.	842

pw:/Active Projects/BEX6102/8.00 Plans and Drawings/8.10 Cut Sheets/8.1.02 Bridge/(2) Structure No. 3/6102CA9R8922.999
10/9/2007 3:35:27 PM

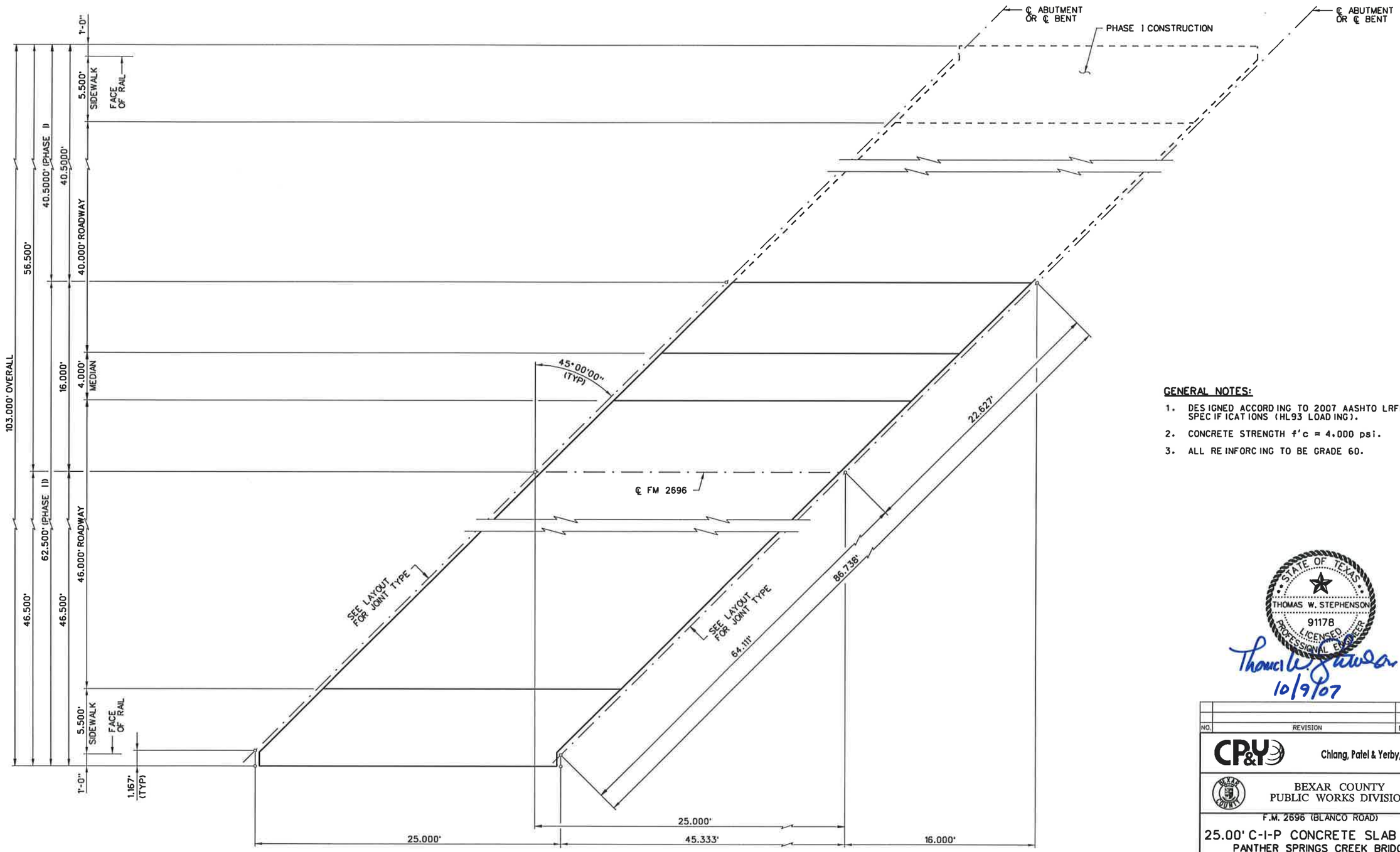

PLAN SHOWING DIMENSIONS

GENERAL NOTES:

1. DESIGNED ACCORDING TO 2007 AASHTO LRFD SPECIFICATIONS (HL93 LOADING).
2. CONCRETE STRENGTH f'c = 4,000 psi.
3. ALL REINFORCING TO BE GRADE 60.

STATE OF TEXAS
THOMAS W. STEPHENSON
91178
LICENSED
PROFESSIONAL ENGINEER

Thomas W. Stephenson
10/9/07

NO.	REVISION	BY	DATE

CP&Y Chiang, Patel & Yerby, Inc.

BEXAR COUNTY
PUBLIC WORKS DIVISION

F.M. 2696 (BLANCO ROAD)

25.00' C-I-P CONCRETE SLAB SPAN
PANTHER SPRINGS CREEK BRIDGE
STRUCTURE NO. 3
PHASE II SHEET 1 OF 3

Designed: GLL	STATE	BEXAR COUNTY FILE NUMBER	PLAN SET NO.
Checked: TWS	TEXAS		611
Drawn: MCB	COUNTY		OF
Checked: TWS	BEXAR	2708-01-022, ETC.	842

pw:/Active Projects/BEX6102/8.00 Plans and Drawings/8.10 Cut Sheets/8.102 Bridge/(2) Structure No. 3/6102CABRBS24.999
10/9/2007 3:34:04 PM

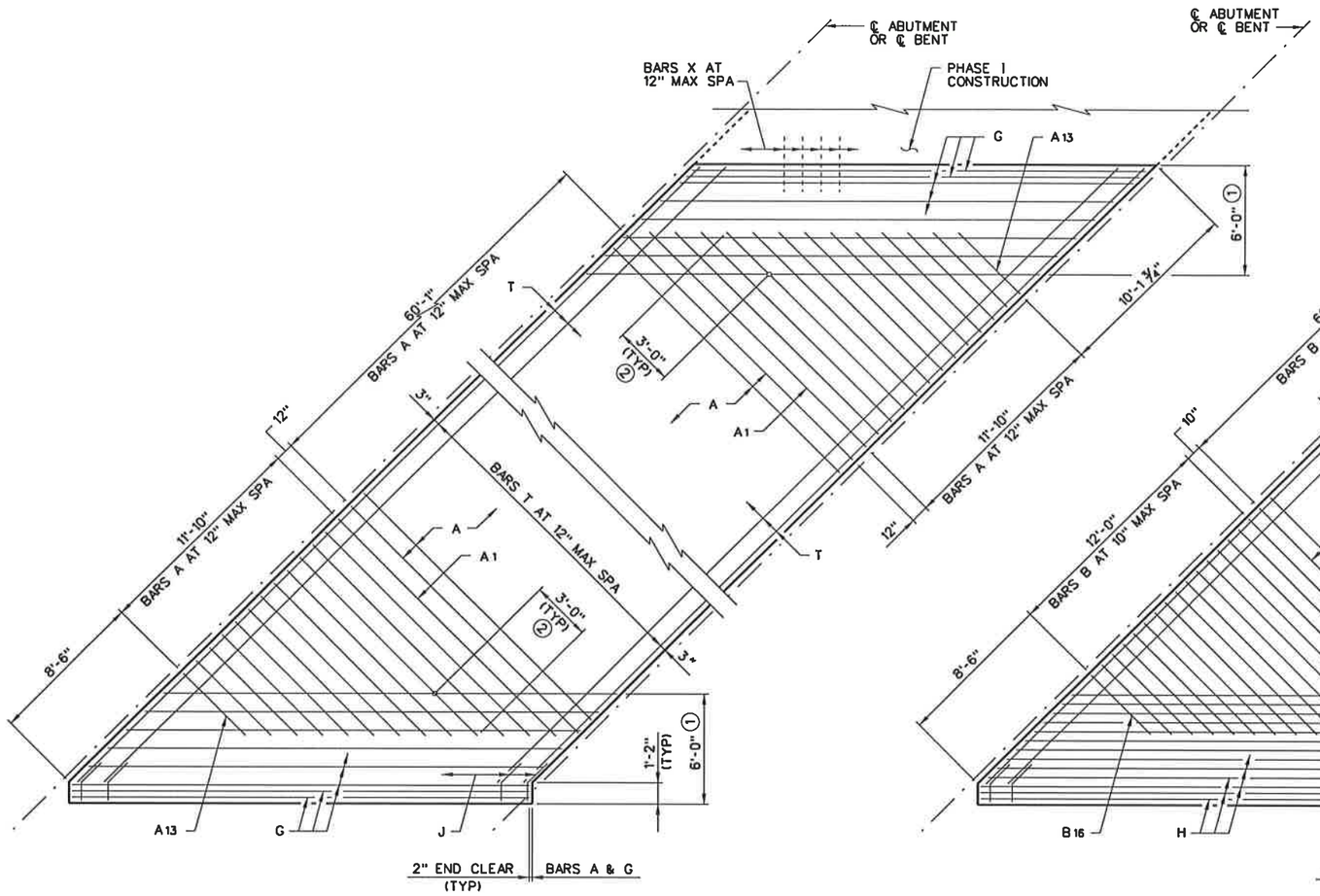

PLAN SHOWING TOP REINFORCING
(SIDEWALK REINFORCING NOT SHOWN FOR CLARITY)

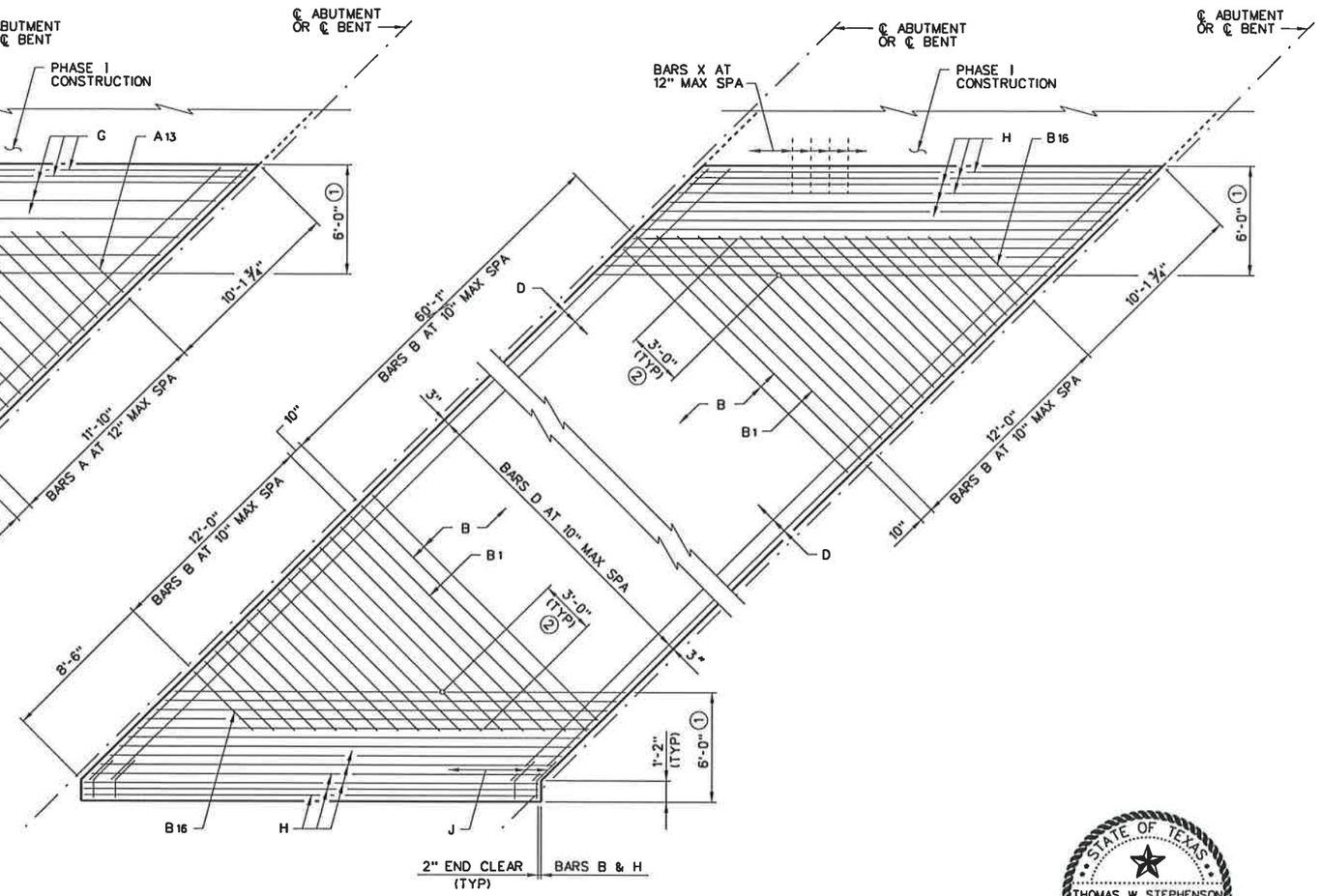

PLAN SHOWING BOTTOM REINFORCING
(SIDEWALK REINFORCING NOT SHOWN FOR CLARITY)

① SEE TYPICAL TRANSVERSE SECTION, SHEET 3 OF 3, FOR BARS G & H SPACING.

② BARS A1-13 & B1-16

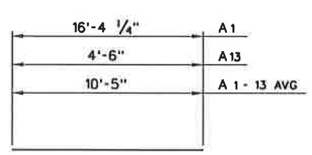

BARS A

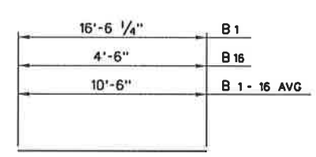

BARS B

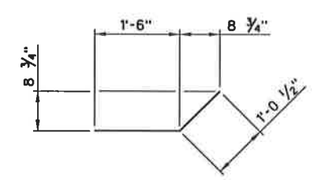

BARS J

STATE OF TEXAS
THOMAS W. STEPHENSON
91178
LICENSED
PROFESSIONAL ENGINEER

Thomas W. Stephenson
10/9/07

NO.	REVISION	BY	DATE

CP&Y Chiang, Patel & Yerby, Inc.

BEXAR COUNTY
PUBLIC WORKS DIVISION

F.M. 2696 (BLANCO ROAD)

25.00' C-I-P CONCRETE SLAB SPAN
PANTHER SPRINGS CREEK BRIDGE
STRUCTURE NO. 3
PHASE II SHEET 2 OF 3

Designed: GLL	STATE	BEXAR COUNTY FILE NUMBER	PLAN SET NO.
Checked: TWS	TEXAS		612
Drawn: GWS	COUNTY		OF
Checked: TWS	BEXAR	2708-01-022, ETC.	842

pw:/Active Projects/BEX6102/8.00 Plans and Drawings/8.10 Cut Sheets/8.1.02 Bridge/(2) Structure No. 3/6102CABRGS25.999
10/9/2007 3:34:12 PM

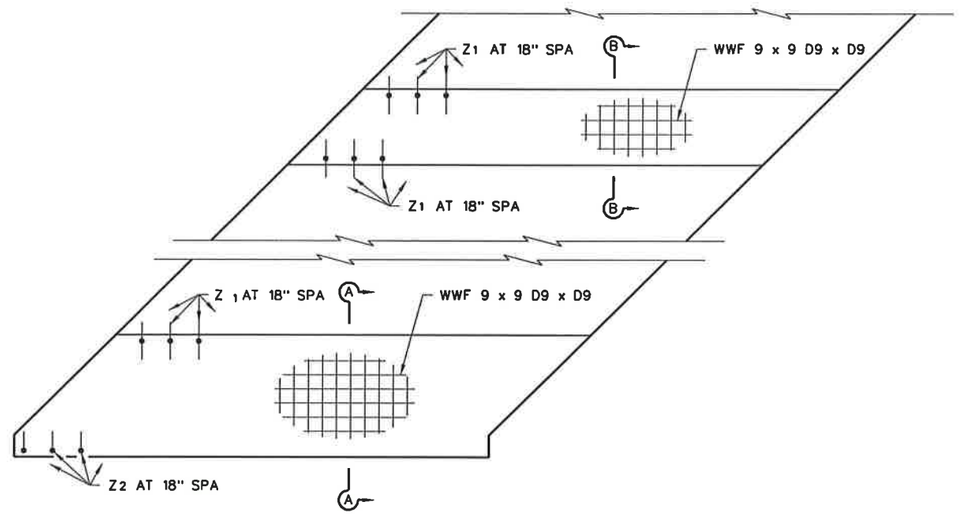

SIDEWALK & MEDIAN DETAIL

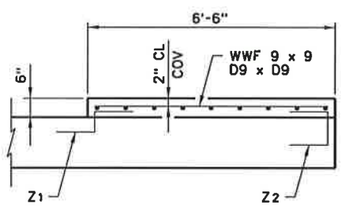

SECTION A-A

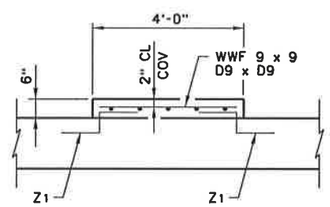

SECTION B-B

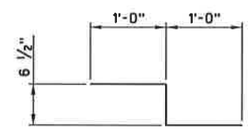

BARS Z1

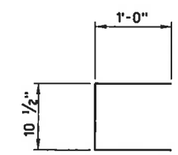

BARS Z2

③ TABLE OF ESTIMATED QUANTITIES

	BAR	NO.	SIZE	LENGTH	WEIGHT
	A	62	#4	17'- 4"	718
	A 1-13	26	#4	10'- 5"AV	181
	B	74	#8	17'- 4"	3,425
	B 1-16	32	#8	10'- 6"AV	897
④	D	22	#4	87'- 6"	1,286
	G	18	#4	24'- 8"	297
	H	26	#8	24'- 8"	1,713
	J	41	#4	2'- 7"	71
④	T	19	#4	87'- 6"	1,111
	Z1	54	#4	2'- 7"	93
	Z2	18	#4	2'-11"	35
⑤	REINFORCING STEEL			LB	9,962
	CLASS "S" CONCRETE			CY	82.7

① LOCATE BARS G BELOW BARS T WHERE NECESSARY TO AVOID CONFLICT WITH BARS A.

② LOCATE BARS H ABOVE BARS D WHERE NECESSARY TO AVOID CONFLICT WITH BARS B.

③ QUANTITIES SHOWN ARE FOR ONE SPAN.

④ LENGTH SHOWN INCLUDES ONE 1'-0" LAP SPLICE.

⑤ REINFORCING WEIGHT SHOWN INCLUDES 135 lbs FOR WELDED WIRE FABRIC.

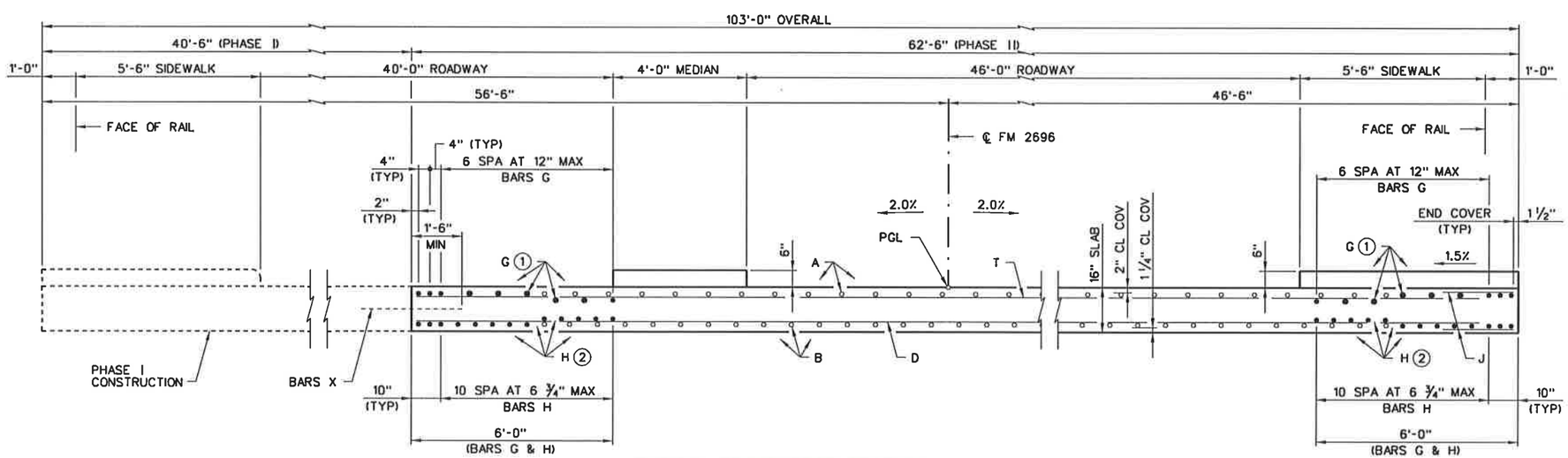

TYPICAL TRANSVERSE SECTION
(SIDEWALK REINFORCING NOT SHOWN FOR CLARITY)

STATE OF TEXAS
THOMAS W. STEPHENSON
91178
LICENSED
PROFESSIONAL ENGINEER

Thomas W. Stephenson
10/9/07

NO.	REVISION	BY	DATE

CP&Y Chiang, Patel & Yerby, Inc.

BEXAR COUNTY
PUBLIC WORKS DIVISION

F.M. 2696 (BLANCO ROAD)

25.00' C-I-P CONCRETE SLAB SPAN
PANTHER SPRINGS CREEK BRIDGE
STRUCTURE NO. 3
PHASE II SHEET 3 OF 3

Designed: GLL	STATE	BEXAR COUNTY FILE NUMBER	PLAN SET NO.	
Checked: TWS	TEXAS		613	
Drawn: GWS	COUNTY		OF	
Checked: TWS	BEXAR	2708-01-022, ETC.	872	

pw:/Active Projects/BEX6102/8.00 Plans and Drawings/8.10 Cut Sheets/8.1.02 Bridge/(2) Structure No. 3/6102C4BRBS26.999
10/9/2007 3:34:20 PM

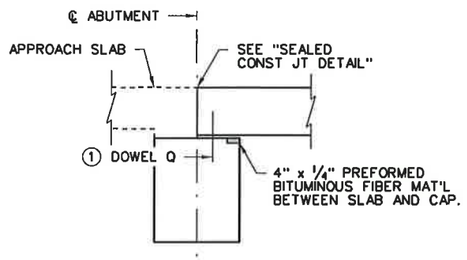

FIXED ABUTMENT
(ABUTMENT NO. 1 SHOWN, ABUTMENT NO. 7 OPPOSITE HAND)

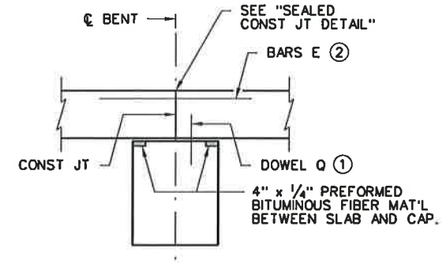

FIXED INTERIOR BENT
(INTERIOR BENT NOS. 2, 4 & 6)

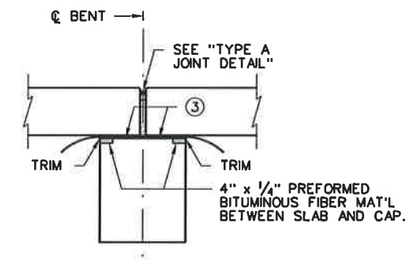

EXPANSION INTERIOR BENT
(INTERIOR BENT NOS. 3 & 5)

① SEE ABUTMENT OR INTERIOR BENT DETAILS FOR QUANTITIES AND LOCATIONS OF DOWELS Q.

② BARS E REQUIRED ONLY AT INTERIOR BENT NOS. 2, 4 AND 6. SEE SHEET 2 OF 2 FOR PLACEMENT.

③ SMOOTH TROWEL FINISH. OIL TOP OF CAP WITH 60 GRADE OIL AND APPLY HEAVY COAT OF POWDERED GRAPHITE. PRESS DOWN ONE LAYER OF 30# ROOFING FELT.

④ SEALANT TO BE CLASS 7 SILICONE SEALANT. INSTALL WHEN AMBIENT TEMPERATURE IS BETWEEN 55°F AND 85°F AND RISING. ENGINEER TO DETERMINE ALLOWABLE HOURS FOR SEALANT APPLICATION.

⑤ BACKER ROD TO BE 25% LARGER THAN JOINT OPENING AND TO BE COMPATIBLE WITH THE SEALANT: NO REACTION SHALL OCCUR BETWEEN THE ROD AND THE SEALANT.

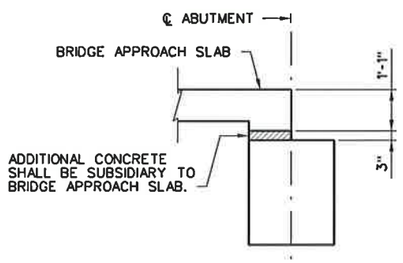

MODIFIED BRIDGE APPROACH SLAB

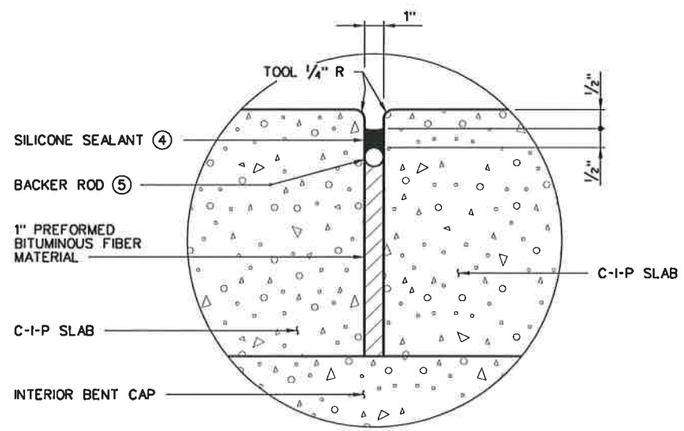

TYPE A JOINT DETAIL
(INTERIOR BENT NOS. 3 & 5 ONLY)

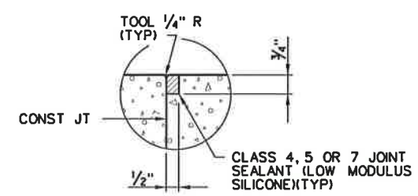

SEALED CONSTRUCTION JOINT DETAIL
(INTERIOR BENT NOS. 2, 4 & 6 ONLY)

GENERAL NOTES:

1. DESIGNED ACCORDING TO 2007 AASHTO LRFD SPECIFICATIONS (HL93 LOADING).
2. SLAB CONSTRUCTION JOINTS AT BENT LOCATIONS TO BE SEALED WITH CLASS 4, 5 OR 7 JOINT SEALANT (LOW MODULUS SILICONE). SEE "SEALED CONSTRUCTION JOINT DETAIL".
3. EXPANSION JOINTS TO BE TYPE A JOINTS. SEE "TYPE A JOINT DETAIL".

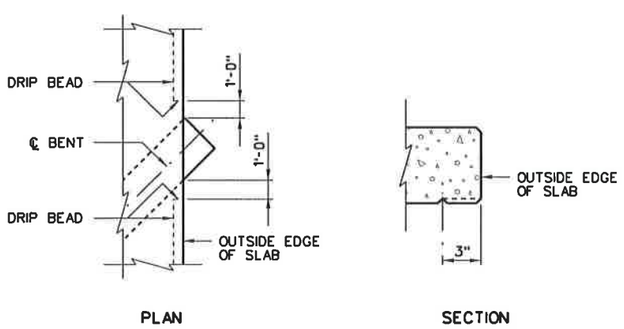

DRIP BEAD DETAILS

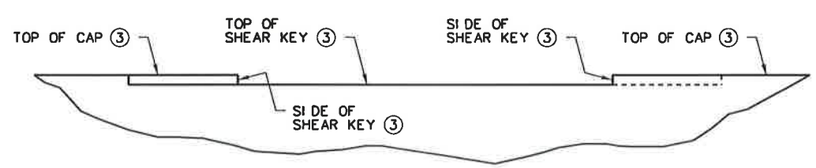

ELEVATION OF CAP
(SHOWING SHEAR KEY ELEVATION)

STATE OF TEXAS
THOMAS W. STEPHENSON
91178
LICENSED
PROFESSIONAL ENGINEER

Thomas W. Stephenson
10/9/07

NO.	REVISION	BY	DATE

CP&Y Chiang, Patel & Yerby, Inc.

BEXAR COUNTY
PUBLIC WORKS DIVISION

F.M. 2696 (BLANCO ROAD)

MISC C-I-P SLAB SPAN DETAILS
PANTHER SPRINGS CREEK BRIDGE
STRUCTURE NO. 3

SHEET 1 OF 2

Designed: GLL	STATE	BEXAR COUNTY FILE NUMBER	PLAN SET NO. 614
Checked: TWS	TEXAS		OF 842
Drawn: LTT	COUNTY		
Checked: TWS	BEXAR	2708-01-022, ETC.	

pw:/Active Projects/BEX6102/8.00 Plans and Drawings/8.10 Cut Sheets/8.1.02 Bridge/(2) Structure No. 3/6102C4RBM21.999
10/9/2007 3:35:35 PM

⑦ TABLE OF ESTIMATED QUANTITIES - PHASE I				
BAR	NO.	SIZE	LENGTH	WEIGHT
E	51	#4	4'-0"	136
REINFORCING STEEL			LB	136

⑦ TABLE OF ESTIMATED QUANTITIES - PHASE II				
BAR	NO.	SIZE	LENGTH	WEIGHT
E	82	#4	4'-0"	219
REINFORCING STEEL			LB	219

⑦ ADJUSTMENT TO C-I-P SLAB REINFORCING STEEL AT FIXED INTERIOR BENT. QUANTITY SHOWN IS FOR ONE FIXED JOINT.

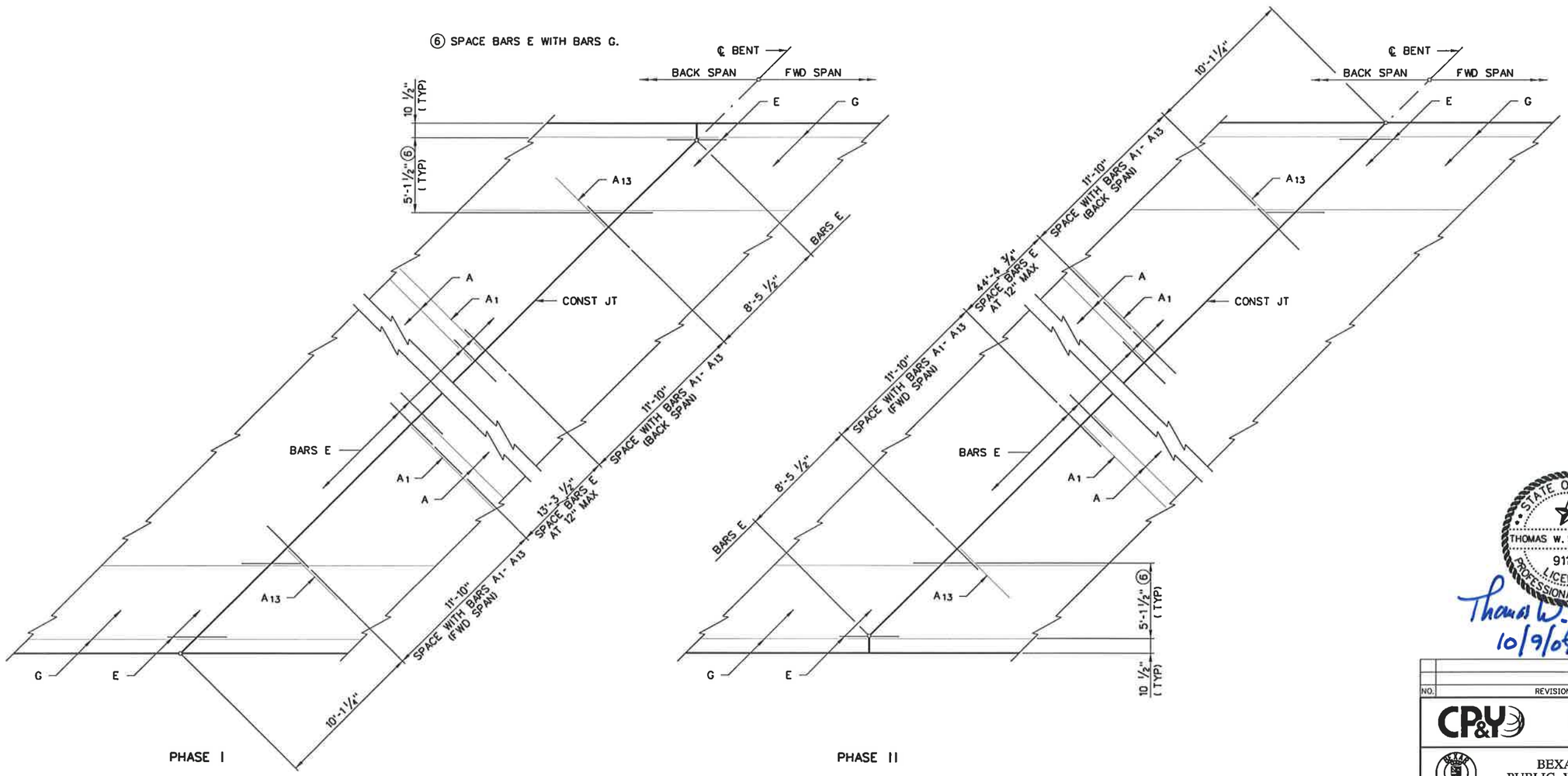

SLAB REINFORCING AT FIXED INTERIOR BENT

SHOWING TOP REINFORCING MAT.
BARS J OR T NOT SHOWN FOR CLARITY.

STATE OF TEXAS
THOMAS W. STEPHENSON
91178
LICENSED
PROFESSIONAL ENGINEER

Thomas W. Stephenson
10/9/07

NO.	REVISION	BY	DATE

CP&Y Chiang, Patel & Yerby, Inc.

BEXAR COUNTY
PUBLIC WORKS DIVISION

F.M. 2696 (BLANCO ROAD)

MISC C-I-P SLAB SPAN DETAILS
PANTHER SPRINGS CREEK BRIDGE
STRUCTURE NO. 3

SHEET 2 OF 2

Designed: GLL	STATE	BEXAR COUNTY FILE NUMBER	PLAN SET NO.
Checked: TWS	TEXAS		615
Drawn: LTT	COUNTY		OF
Checked: TWS	BEXAR	270B-01-022, ETC.	842

per/Active Projects/BEX6102/8.00 Plans and Drawings/8.10 Cut Sheets/8.1.02 Bridge/121 Structure No. 3/6102CABRBN22.999
10/9/2007 3:35:42 PM

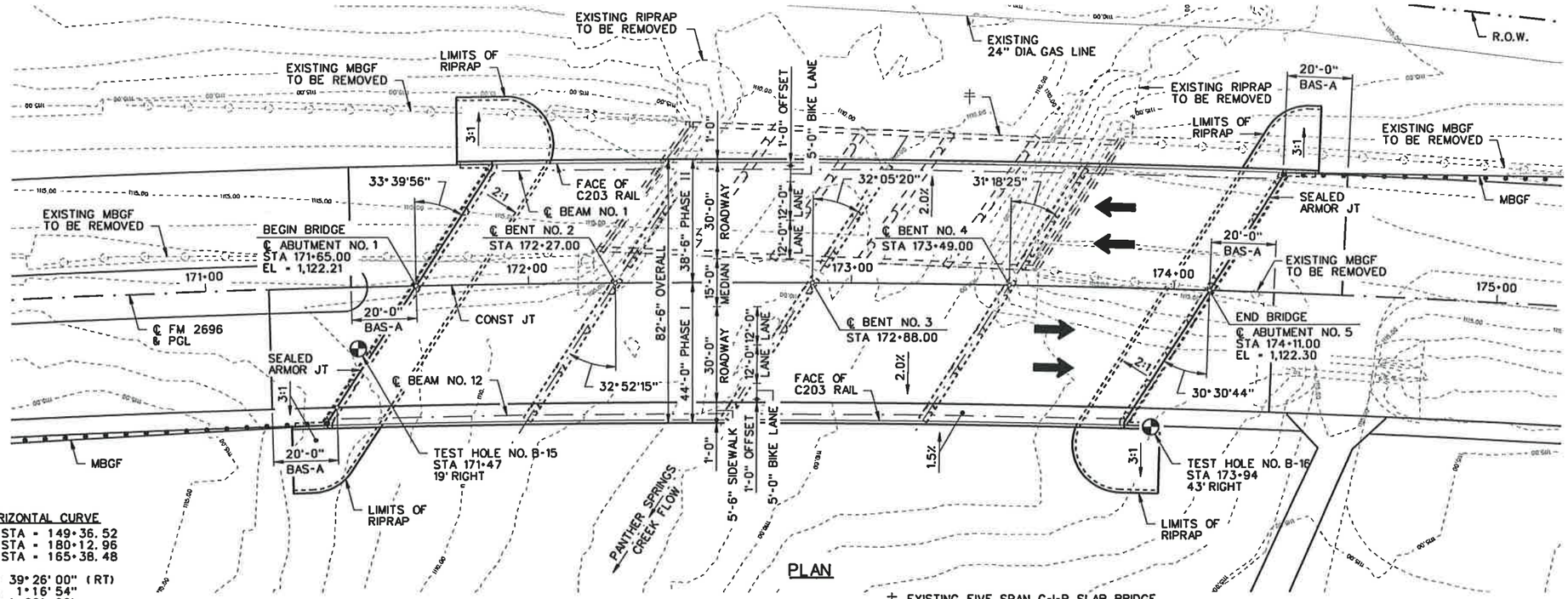

PLAN

‡ EXISTING FIVE SPAN C-I-P SLAB BRIDGE (127.5' LENGTH x 42' WIDTH) TO BE REMOVED. EXISTING FOUNDATIONS TO BE REMOVED TO 1' MIN BELOW FINISHED GRADE.

20 10 0 20 40
SCALE FEET

HORIZONTAL CURVE

PC STA = 149+36.52
PT STA = 180+12.96
PI STA = 165+38.48

Δ = 39°26'00" (RT)
D = 1°16'54"
T = 1,601.96'
L = 3,076.44'
R = 4,470.00'

GENERAL NOTES:

1. DESIGNED ACCORDING TO 2007 AASHTO LRFD STANDARD SPECIFICATIONS (HL93 LOADING).
2. THE CONTRACTOR SHALL VERIFY ALL ELEVATIONS AND DIMENSIONS TO EXISTING STRUCTURES IN THE FIELD PRIOR TO COMMENCING WORK OR ORDERING MATERIALS.
3. D = DOWELS
4. ALL ABUTMENTS AND BENTS AT BEARING N 57°01'06" W UNLESS OTHERWISE NOTED.
5. SEE TYPICAL SECTIONS SHEET FOR BRIDGE TYPICAL SECTIONS.
6. BRIDGE SIDEWALK EXPANSION JOINT COVER PLATE TO BE PLACED IN SIDEWALK AT ABUTMENT NOS. 1 AND 5. SEE STANDARD SHEET BS-EJCP FOR DETAILS.
7. STREAM CHANNEL AND NATURAL GROUND TO REMAIN UNGRADED EXCEPT FOR REMOVAL OF EXISTING ABUTMENT SLOPES. SEE MISCELLANEOUS DRAINAGE DETAILS - STRUCTURE 9 GRADING PLAN FOR FINISHED GROUND ELEVATIONS UNDER BRIDGE.

EXIST NBI NUMBER = 15-015-0-2708-01-006
NBI NUMBER = 15-015-0-2708-01-096
FUNCTIONAL CLASS = RURAL MAJOR COLLECTOR
DESIGN SPEED = 45 MPH
ADT = 14,400 (2005), 23,900 (2025)

HYDRAULIC DATA TABLE

HW_{10} = 1,115.45	HW_{25} = 1,116.34	HW_{100} = 1,117.53
Q_{10} = 5,743 cfs	Q_{25} = 7,828 cfs	Q_{100} = 11,360 cfs
V_{10} = 4.86 ft/s	V_{25} = 5.65 ft/s	V_{100} = 6.83 ft/s

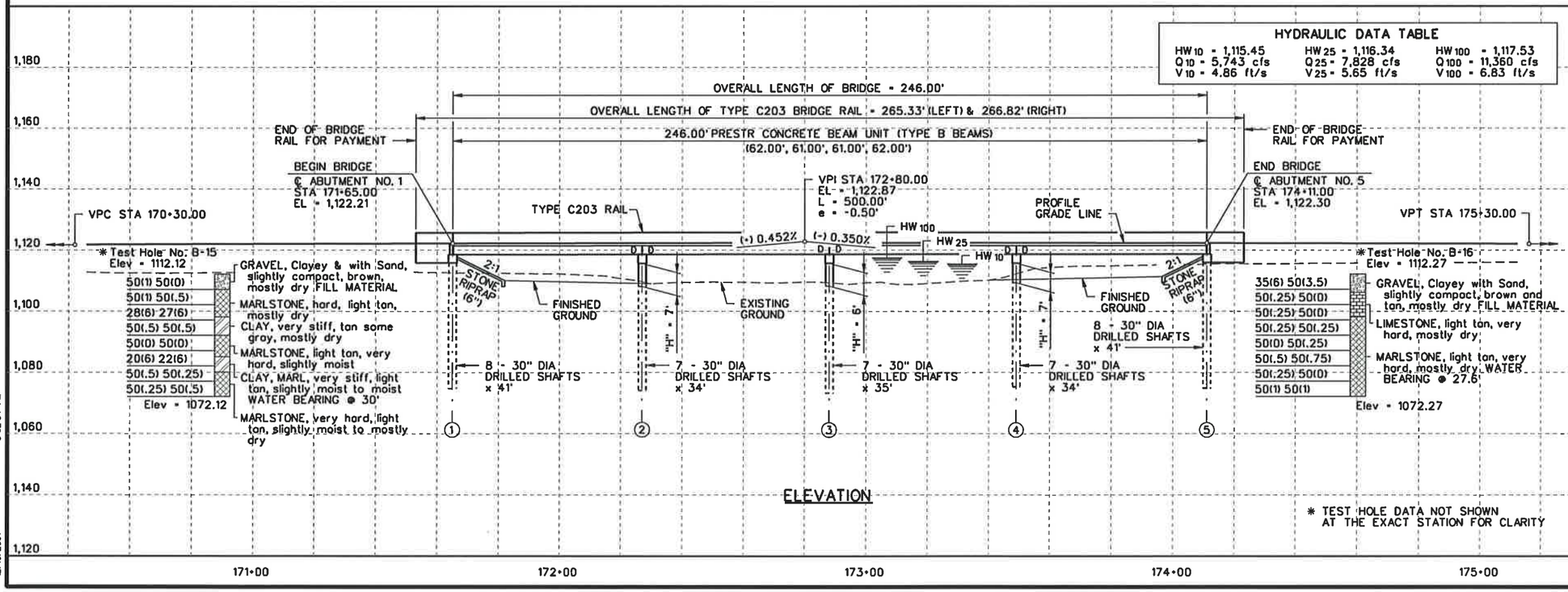

ELEVATION

* TEST HOLE DATA NOT SHOWN AT THE EXACT STATION FOR CLARITY

STATE OF TEXAS
THOMAS G. ASHCRAFT
81411
REGISTERED PROFESSIONAL ENGINEER
12/10/07

NO.	REVISION	BY	DATE

CP&Y Chiang, Patel & Yerby, Inc.

BEXAR COUNTY PUBLIC WORKS DIVISION

F.M. 2696 (BLANCO ROAD)

BRIDGE LAYOUT
PANTHER SPRINGS CREEK BRIDGE
STRUCTURE NO. 9

Designed: GLL	STATE	BEXAR COUNTY FILE NUMBER	PLAN SET NO. 616
Checked: TGA	TEXAS		
Drawn: LTT	COUNTY		OF 842
Checked: GLL	BEXAR	2708-01-022, ETC.	

pw:/Active Projects/BEX6102/6.00 Plans and Drawings/6.10 Cut Sheets/6.1.02 Bridge/119 Structure No. 9/6102CABR9L11.dgn
12/10/2007 5:02:34 PM

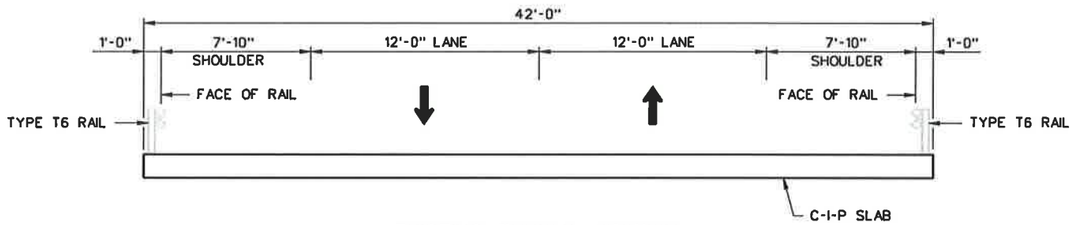

EXISTING TYPICAL SECTION

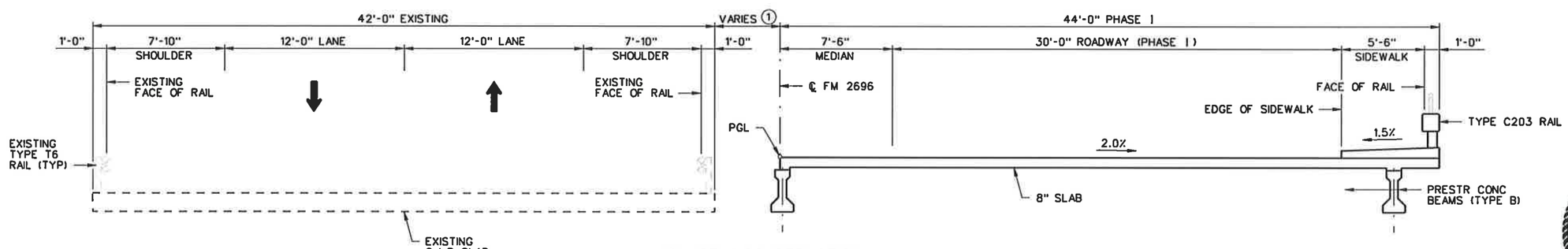

PHASE I CONSTRUCTION

① VARIES (4'-11" MIN - 9'-11 1/2" MAX)

STATE OF TEXAS
THOMAS G. ASHCRAFT
81411
REGISTERED
PROFESSIONAL ENGINEER

Thomas G. Ashcraft
10/9/07

NO.	REVISION	BY	DATE

CP&Y Chiang, Patel & Yerby, Inc.

BEXAR COUNTY
PUBLIC WORKS DIVISION

F.M. 2696 (BLANCO ROAD)

TYPICAL SECTIONS
PANTHER SPRINGS CREEK BRIDGE
STRUCTURE NO. 9

SHEET 1 OF 2

Designed: JTB	STATE	BEXAR COUNTY FILE NUMBER	PLAN SET NO. 617
Checked: TGA	TEXAS		
Drawn: PMR	COUNTY		OF 847
Checked: GLL	BEXAR	2708-01-022, ETC.	

pw:/Active Projects/BEX6102/8.00 Plans and Drawings/8.10 Cut Sheets/8.1.02 Bridge/19 Structure No. 9/6102CABRGT11.999
10/9/2007 3:59:08 PM

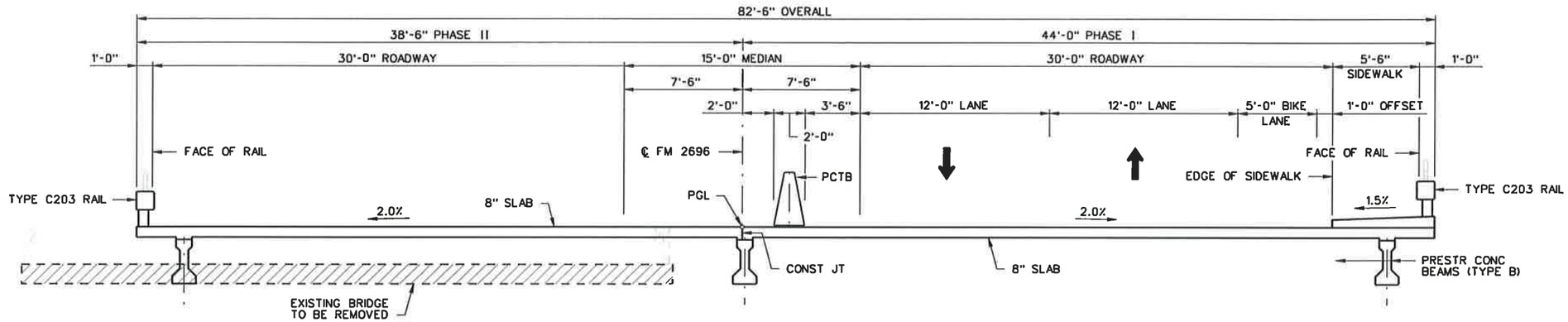

PHASE II CONSTRUCTION

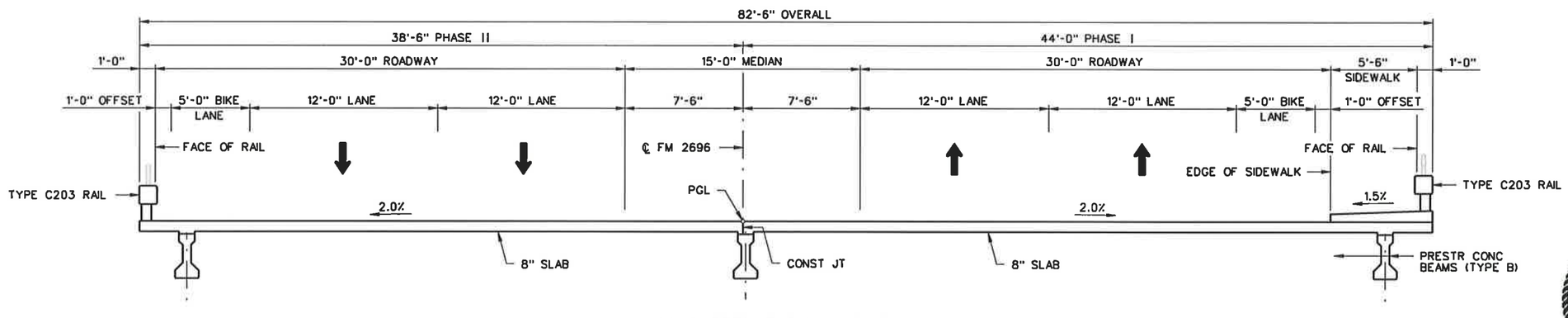

COMPLETED TYPICAL SECTION

STATE OF TEXAS
THOMAS G. ASHCRAFT
81411
REGISTERED PROFESSIONAL ENGINEER

Thomas G. Ashcraft
10/9/07

NO.	REVISION	BY	DATE

CP&Y Chiang, Patel & Yerby, Inc.

BEXAR COUNTY
PUBLIC WORKS DIVISION

F.M. 2696 (BLANCO ROAD)

TYPICAL SECTIONS
PANTHER SPRINGS CREEK BRIDGE
STRUCTURE NO. 9

SHEET 2 OF 2

Designed: JTB	STATE	BEXAR COUNTY FILE NUMBER	PLAN SET NO. 618
Checked: TGA	TEXAS		
Drawn: MC	COUNTY		OF
Checked: GLL	BEXAR	2708-01-022, ETC.	842

pw:/Active Projects/BEX6102/8.00 Plans and Drawings/8.10 Cut Sheets/8.1.02 Bridge/11 Structure No. 9/6102C4BRGT12.999
10/9/2007 4:00:02 PM

SUMMARY OF ESTIMATED QUANTITIES

PANTHER SPRINGS CREEK BRIDGE STRUCTURE NO. 9

	ITEM / DESCRIPTION	0416 2003 DRILLED SHAFTS 30" DIA. LF	0420 2003 CLASS "C" CONCRETE ABUT. CY	0420 2004 CLASS "C" CONCRETE BENT CY	0420 2033 CLASS "S" CONCRETE (APPROACH SLAB) CY	0422 2001 REINFORCED CONCRETE SLAB SF	0425 2002 PRESTRESSED CONCRETE BEAM TYPE B LF	0428 2001 CONCRETE SURFACE TREATMENT (CLASS 1) SY	0432 2015 RIPRAP (STONE COMMON) (DRY) (6 IN) CY	0450 2016 RAILING TYPE C203 LF	0454 2005 SEALED ARMOR JOINT LF	0496 2010 REMOVE STRUCTURE (BRIDGE 100-499 FT LENGTH) EA	0442 2005 STRUCTURAL STEEL (MISC) LBS
PHASE I	2 - ABUTMENTS	410	46.9		95.6				59.1	20.0			
	3 - INTERIOR BENTS	412		63.2									
	246.00' PRESTR CONC BM UNIT					10,845	1,715.42	1,191		246.8	101		178
	PHASE TOTAL	822	46.9	63.2	95.6	10,845	1,715.42	1,191	59.1	266.8	101		178
PHASE II	2 - ABUTMENTS	246	36.1		94.7				48.5	20.0			
	3 - INTERIOR BENTS	309		45.9									
	246.00' PRESTR CONC BM UNIT					9,455	1,220.75	1,023		245.3	85		
	PHASE TOTAL	555	36.1	45.9	94.7	9,455	1,220.75	1,023	48.5	265.3	85	1	
	TOTAL	1,377	83.0	109.1	190.3	20,300	2,936.17	2,214	107.6	532.1	186	1	178

BEARING SEAT ELEVATIONS (PHASE I)

	BEAM 6	BEAM 7	BEAM 8	BEAM 9	BEAM 10	BEAM 11	BEAM 12
BENT 1 (FWD)	1118.244	1118.097	1117.950	1117.802	1117.654	1117.506	1117.357
BENT 2 (BK)	1118.357	1118.214	1118.072	1117.928	1117.785	1117.642	1117.498
(FWD)	1118.359	1118.216	1118.074	1117.931	1117.787	1117.644	1117.500
BENT 3 (BK)	1118.411	1118.273	1118.135	1117.996	1117.857	1117.718	1117.579
(FWD)	1118.412	1118.274	1118.135	1117.997	1117.858	1117.719	1117.580
BENT 4 (BK)	1118.406	1118.272	1118.137	1118.003	1117.868	1117.733	1117.598
(FWD)	1118.405	1118.271	1118.137	1118.002	1117.868	1117.733	1117.598
BENT 5 (BK)	1118.339	1118.209	1118.079	1117.948	1117.818	1117.687	1117.556

BEARING SEAT ELEVATIONS (PHASE II)

	BEAM 1	BEAM 2	BEAM 3	BEAM 4	BEAM 5
BENT 1 (FWD)	1117.589	1117.722	1117.855	1117.988	1118.120
BENT 2 (BK)	1117.678	1117.816	1117.953	1118.091	1118.227
(FWD)	1117.679	1117.817	1117.955	1118.092	1118.229
BENT 3 (BK)	1117.709	1117.852	1117.994	1118.136	1118.277
(FWD)	1117.710	1117.852	1117.994	1118.136	1118.277
BENT 4 (BK)	1117.683	1117.830	1117.976	1118.122	1118.267
(FWD)	1117.682	1117.828	1117.975	1118.121	1118.266
BENT 5 (BK)	1117.597	1117.747	1117.897	1118.047	1118.197

STATE OF TEXAS
THOMAS W. STEPHENSON
91178
LICENSED
PROFESSIONAL ENGINEER

Thomas W. Stephenson
10/9/07

NO.	REVISION	BY	DATE

CP&Y Chiang, Patel & Yerby, Inc.

BEXAR COUNTY
PUBLIC WORKS DIVISION

F.M. 2696 (BLANCO ROAD)
ESTIMATED QUANTITIES AND
BEARING SEAT ELEVATIONS
PANTHER SPRINGS CREEK BRIDGE
STRUCTURE NO. 9

Designed: GLL	STATE	BEXAR COUNTY FILE NUMBER	PLAN SET NO. 619
Checked: TWS	TEXAS		OF 842
Drawn: GWS	COUNTY		
Checked: GLL	BEXAR	2708-01-022, ETC.	

pw:/Active Projects/BEX6102/8.00 Plans and Drawings/8.10 Cut Sheets/8.102 Bridge/(1) Structure No. 9/6102CABRBQ11.999
10/9/2007 3:58:06 PM

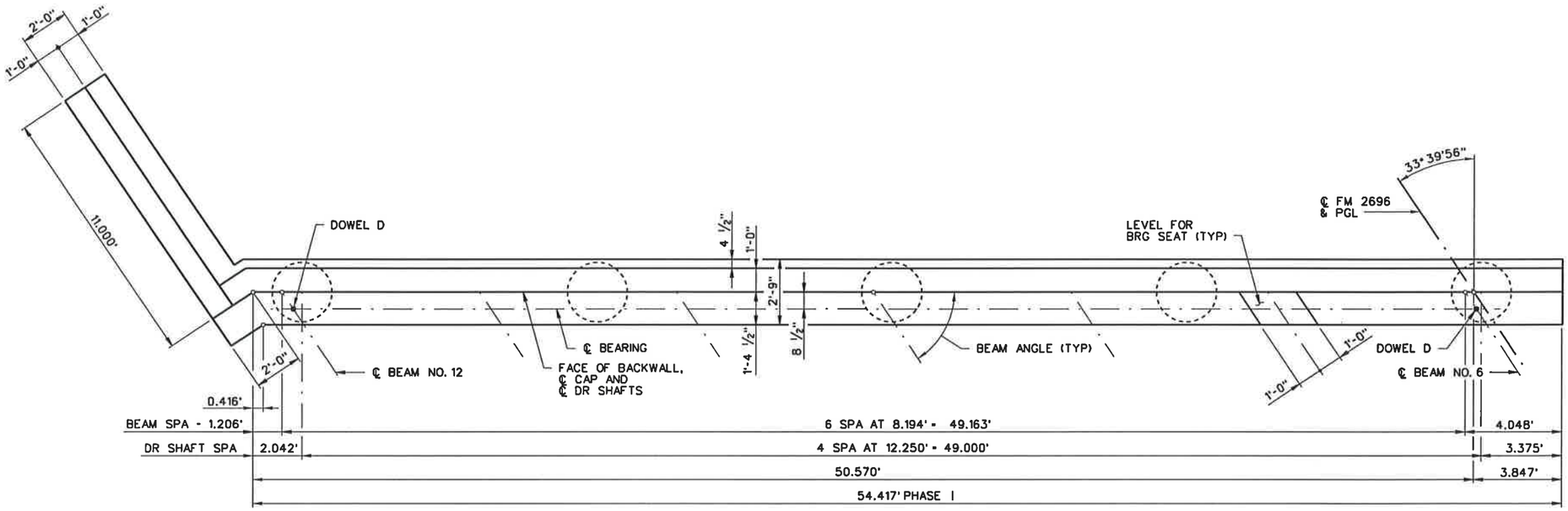

PLAN

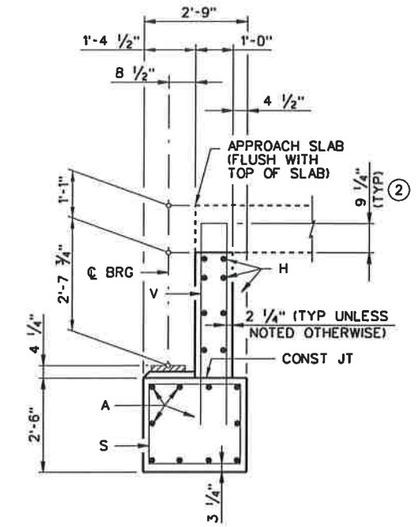

SECTION A-A

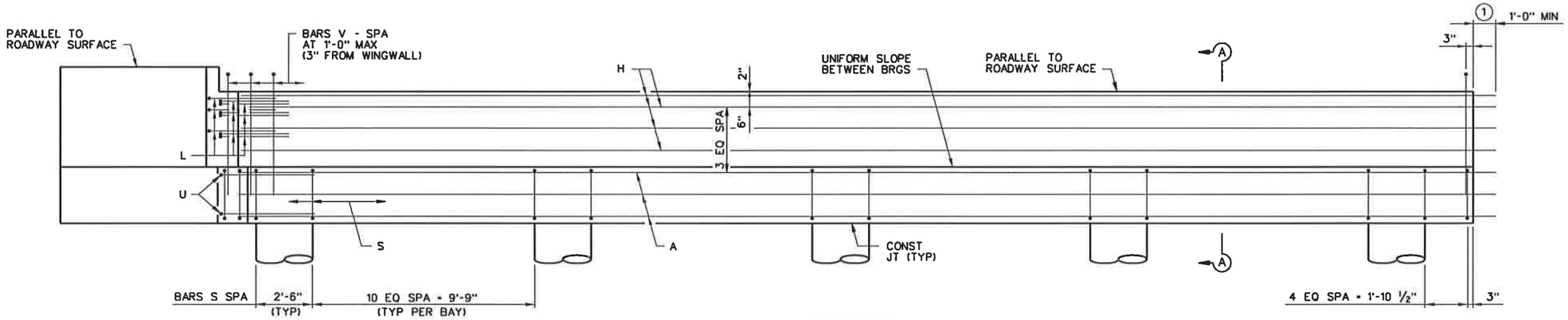

ELEVATION

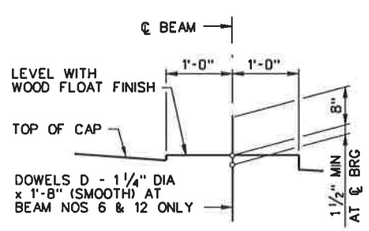

BEARING SEAT DETAIL

(BEARING SURFACE TO BE CLEAN AND FREE OF ALL LOOSE MATERIAL BEFORE PLACING BEARING PAD.)

① EXTEND BARS A & H 1'-0" MIN INTO PHASE II CONSTRUCTION.

② INCREASE AS REQUIRED TO MAINTAIN 3 3/4" FROM FINISHED GRADE.

GENERAL NOTES:

1. DESIGNED ACCORDING TO 2007 AASHTO LRFD SPECIFICATIONS (HL93 LOADING).
2. CONCRETE STRENGTH f'c = 3,600 psi.
3. ALL REINFORCING TO BE GRADE 60.
4. SEE BRIDGE LAYOUT FOR FOUNDATION TYPE, SIZE AND LENGTH.
5. SEE FOUNDATION DETAIL STANDARD SHEET, FD, FOR ALL FOUNDATION DETAILS AND NOTES.
6. SEE BEAM LAYOUT FOR BEAM ANGLES.
7. CALCULATED FOUNDATION LOADS: 57 TONS/DRILLED SHAFT.
8. SEE STANDARD AJ ARMOR JT DETAILS. SEE SPAN DETAILS FOR LENGTH OF AJ TO BE PLACED WITH ABUTMENT.

STATE OF TEXAS
THOMAS W. STEPHENSON
91178
LICENSED
PROFESSIONAL ENGINEER

Thomas W. Stephenson
10/9/07

NO.	REVISION	BY	DATE

CP&Y Chiang, Patel & Yerby, Inc.

BEXAR COUNTY PUBLIC WORKS DIVISION

F.M. 2696 (BLANCO ROAD)

ABUTMENT NO. 1
PANTHER SPRINGS CREEK BRIDGE
STRUCTURE NO. 9
PHASE I

SHEET 1 OF 2

Designed: GLL	STATE	BEXAR COUNTY FILE NUMBER	PLAN SET NO. 600
Checked: TWS	TEXAS		
Drawn: KH	COUNTY		OF
Checked: GLL	BEXAR	2708-01-022, ETC.	842

pw:/Active Projects/BEX6102/8.00 Plans and Drawings/8.10 Cut Sheets/8.1.02 Bridge/(1) Structure No. 9/6102CABRA511.999
10/9/2007 3:27:42 PM

TABLE OF ESTIMATED QUANTITIES				
BAR	NO.	SIZE	LENGTH	WEIGHT
A	10	#11	55'-5"	2,944
D	2	1 1/4"Ø	1'-8"	14
H	8	#5	55'-8"	464
L	9	#6	6'-0"	81
S	52	#4	9'-8"	336
U	2	#6	11'-9"	35
V	56	#5	10'-8"	623
wH1	7	#6	11'-9"	124
wH2	10	#6	10'-8"	160
wS	12	#4	7'-9"	62
wV	12	#5	10'-11"	137
REINFORCING STEEL			LB	4,980
CLASS "C" CONCRETE			CY	24.1

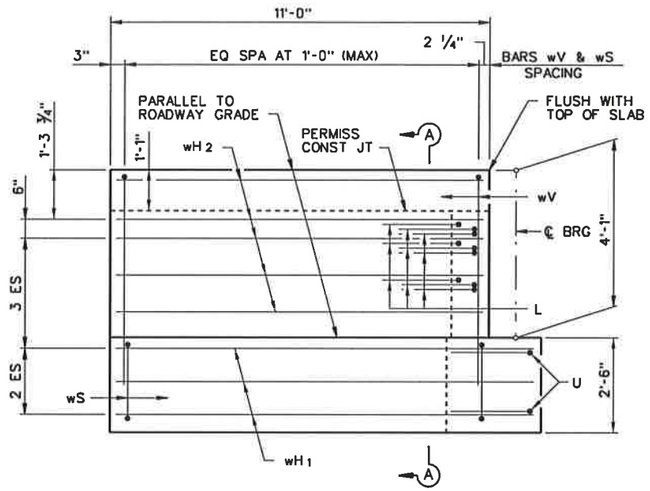

WINGWALL ELEVATION

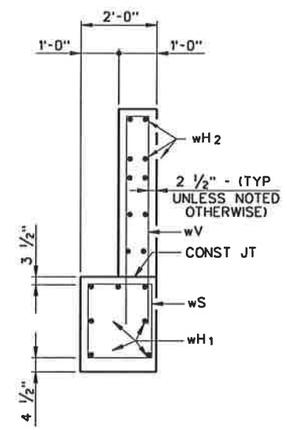

SECTION A-A

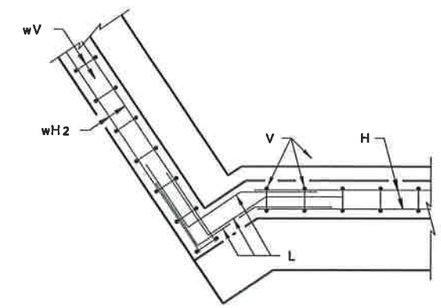

BACKWALL

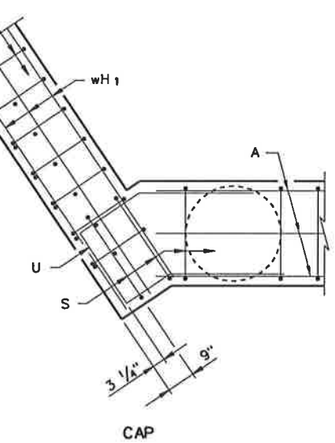

CAP

CORNER DETAILS

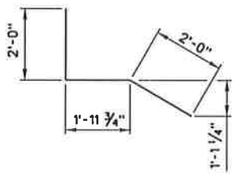

BARS L

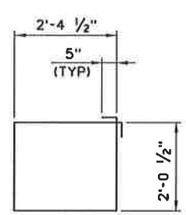

BARS S

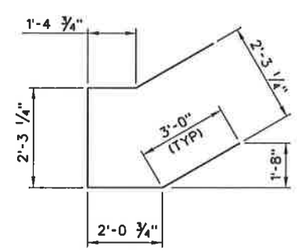

BARS U

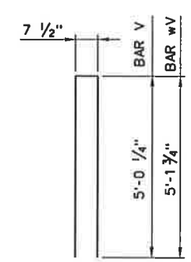

BARS V & wV

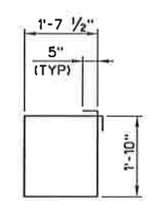

BARS wS

STATE OF TEXAS
THOMAS W. STEPHENSON
91178
LICENSED PROFESSIONAL ENGINEER

Thomas W. Stephenson
10/9/07

NO.	REVISION	BY	DATE

CP&Y Chiang, Patel & Yerby, Inc.

BEXAR COUNTY
PUBLIC WORKS DIVISION

F.M. 2696 (BLANCO ROAD)

ABUTMENT NO. 1
PANTHER SPRINGS CREEK BRIDGE
STRUCTURE NO. 9
PHASE I

SHEET 2 OF 2

Designed: GLL	STATE	BEXAR COUNTY FILE NUMBER	PLAN SET NO. 621
Checked: TWS	TEXAS		
Drawn: KH	COUNTY		OF 842
Checked: GLL	BEXAR	2708-01-022, ETC.	

pw:/Active Projects/BEX6102/8.00 Plans and Drawings/8.10 Cut Sheets/8.1.02 Bridge/11 Structure No. 9/6102CABRAS12.999
10/9/2007
3:27:51 PM

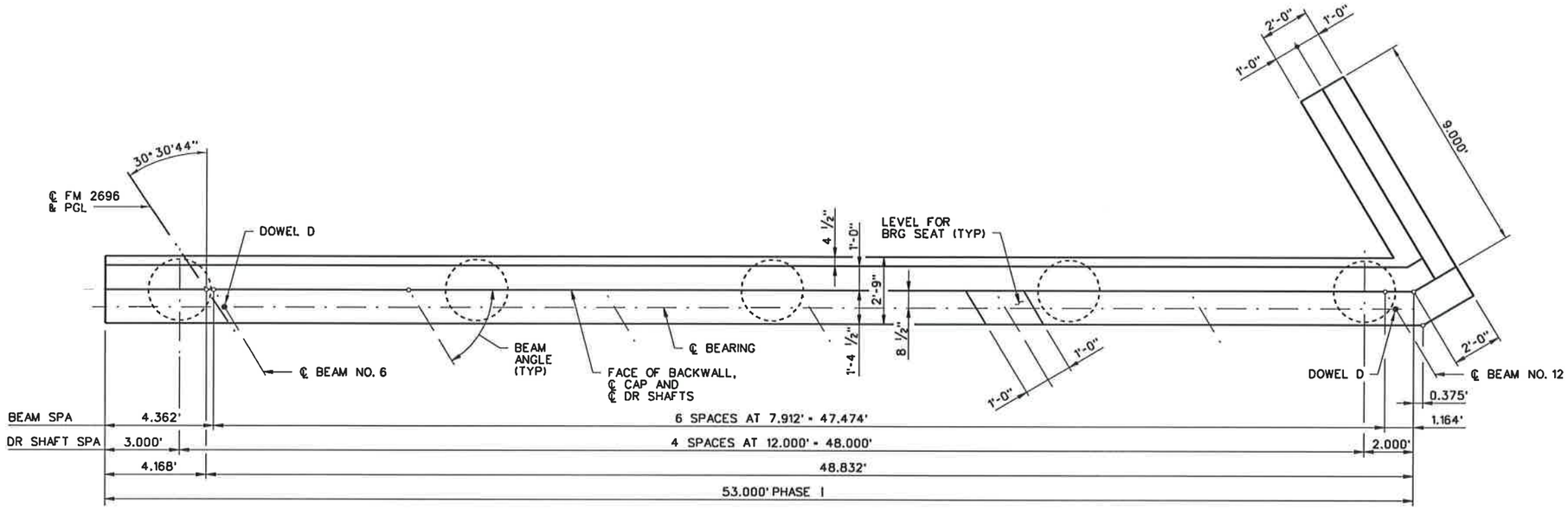

PLAN

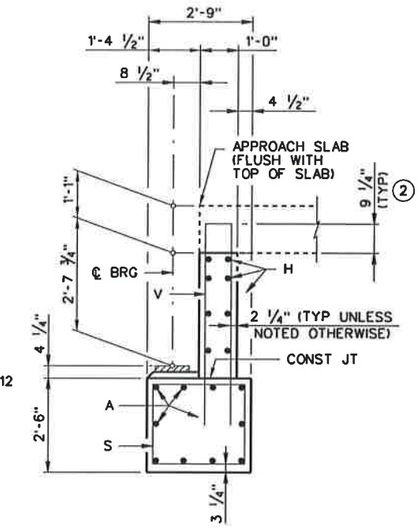

SECTION A-A

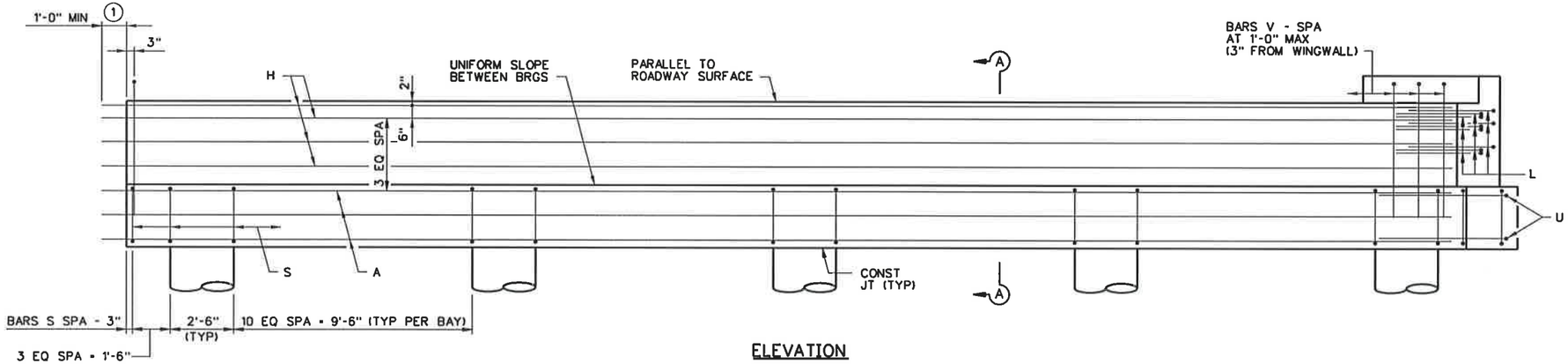

ELEVATION

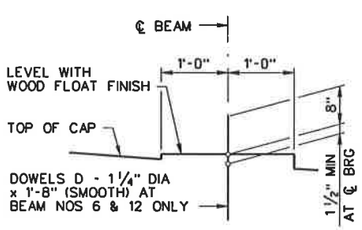

BEARING SEAT DETAIL

(BEARING SURFACE TO BE CLEAN AND FREE OF ALL LOOSE MATERIAL BEFORE PLACING BEARING PAD.)

① EXTEND BARS A & H 1'-0" MIN INTO PHASE II CONSTRUCTION.

② INCREASE AS REQUIRED TO MAINTAIN 3 ¾" FROM FINISHED GRADE.

GENERAL NOTES:

1. DESIGNED ACCORDING TO 2007 AASHTO LRFD SPECIFICATIONS (HL93 LOADING).
2. CONCRETE STRENGTH f'c = 3,600 psi.
3. ALL REINFORCING TO BE GRADE 60.
4. SEE BRIDGE LAYOUT FOR FOUNDATION TYPE, SIZE AND LENGTH.
5. SEE FOUNDATION DETAIL STANDARD SHEET, FD. FOR ALL FOUNDATION DETAILS AND NOTES.
6. SEE BEAM LAYOUT FOR BEAM ANGLES.
7. CALCULATED FOUNDATION LOADS: 56 TONS/DRILLED SHAFT.
8. SEE STANDARD AJ ARMOR JT DETAILS. SEE SPAN DETAILS FOR LENGTH OF AJ TO BE PLACED WITH ABUTMENT.

STATE OF TEXAS
THOMAS W. STEPHENSON
91178
LICENSED
PROFESSIONAL ENGINEER

Thomas W. Stephenson
10/9/07

NO.	REVISION	BY	DATE

CP&Y Chiang, Patel & Yerby, Inc.

BEXAR COUNTY PUBLIC WORKS DIVISION

F.M. 2696 (BLANCO ROAD)

ABUTMENT NO. 5

PANTHER SPRINGS CREEK BRIDGE

STRUCTURE NO. 9

PHASE I SHEET 1 OF 2

Designed: GLL	STATE	BEXAR COUNTY FILE NUMBER	PLAN SET NO. 622
Checked: TWS	TEXAS		
Drawn: MCB	COUNTY		OF 842
Checked: GLL	BEXAR	2708-01-022, ETC.	

pw:/Active Projects/BEX6102/8.00 Plans and Drawings/8.10 Cut Sheets/8.1.02 Bridge/19 Structure No. 9/6102C49RA515.999
10/9/2007 3:28:18 PM

TABLE OF ESTIMATED QUANTITIES

BAR	NO.	SIZE	LENGTH	WEIGHT
A	10	#11	53'- 9"	2,856
D	2	1 1/4"Ø	1'- 8"	14
H	8	#5	54'- 0"	451
L	9	#6	5'- 9"	78
S	51	#4	9'- 8"	329
U	2	#6	11'- 9"	35
V	54	#5	10'- 8"	601
wH1	7	#6	10'- 1"	106
wH2	10	#6	8'- 8"	130
wS	10	#4	7'- 9"	52
wV	10	#5	10'-11"	114
RE INFORCING STEEL			LB	4,766
CLASS "C" CONCRETE			CY	22.8

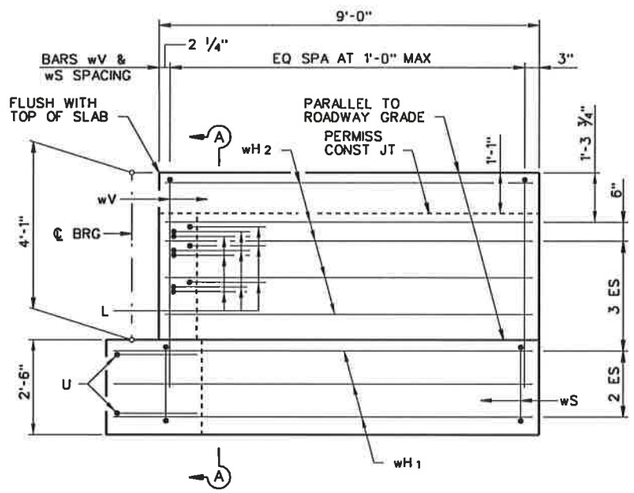

WINGWALL ELEVATION

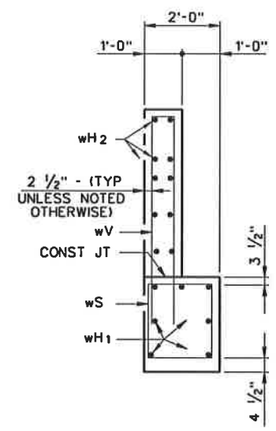

SECTION A-A

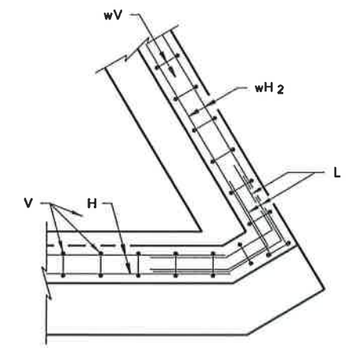

BACKWALL

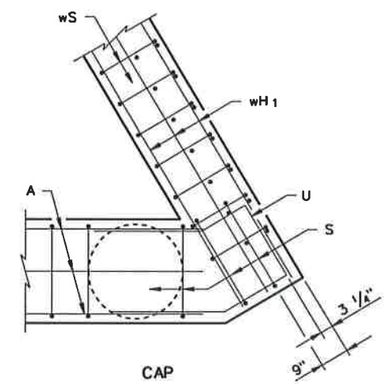

CAP

CORNER DETAILS

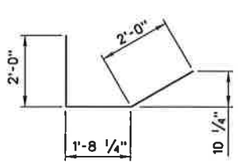

BARS L

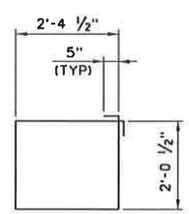

BARS S

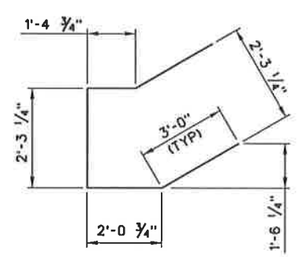

BARS U

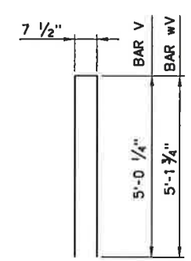

BARS V & wV

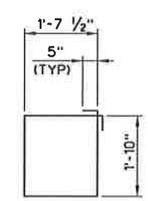

BARS wS

STATE OF TEXAS
THOMAS W. STEPHENSON
91178
LICENSED
PROFESSIONAL ENGINEER

Thomas W. Stephenson
10/9/07

NO.	REVISION	BY	DATE

CP&Y Chiang, Patel & Yerby, Inc.

BEXAR COUNTY
PUBLIC WORKS DIVISION

F.M. 2696 (BLANCO ROAD)
ABUTMENT NO. 5
PANTHER SPRINGS CREEK BRIDGE
STRUCTURE NO. 9
PHASE I SHEET 2 OF 2

Designed: GLL	STATE	BEXAR COUNTY FILE NUMBER	PLAN SET NO. 623
Checked: TWS	TEXAS		OF 842
Drawn: KH	COUNTY		
Checked: GLL	BEXAR	2708-01-022, ETC.	

pw:/Active Projects/BEX6102/8.00 Plans and Drawings/8.10 Cut Sheets/8.1.02 Bridge/111 Structure No. 9/6102CABRAS16.999
10/9/2007 3:28:27 PM

TABLE OF CONSTANT QUANTITIES

BAR	NO.	SIZE	LENGTH	WEIGHT
A	5	#11	52'-8"	1,399
B	5	#11	52'-8"	1,399
D	4	1¼"Ø	1'-8"	28
S	55	#5	11'-0"	631
T	4	#5	52'-8"	220
REINFORCING STEEL			LB	3,677
CLASS "C" CONCRETE (CAP)			CY	16.4

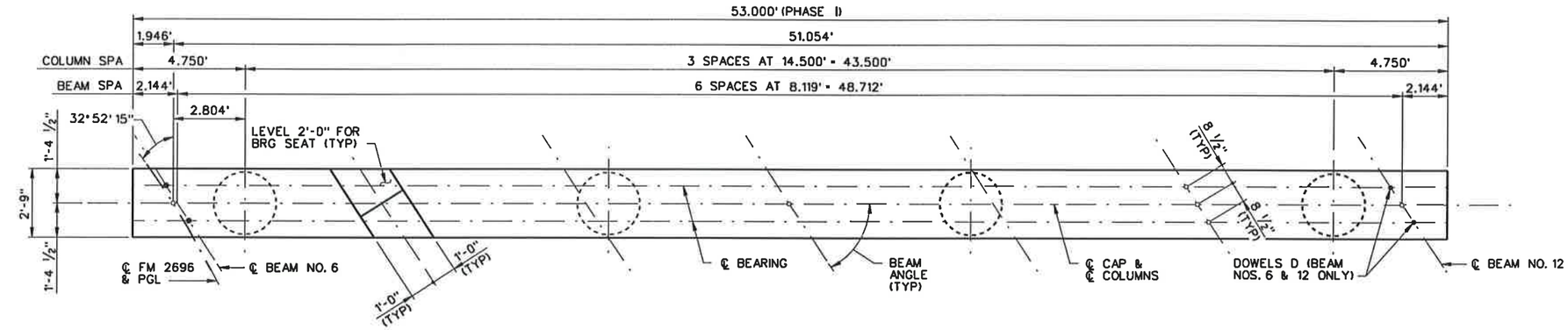

PLAN

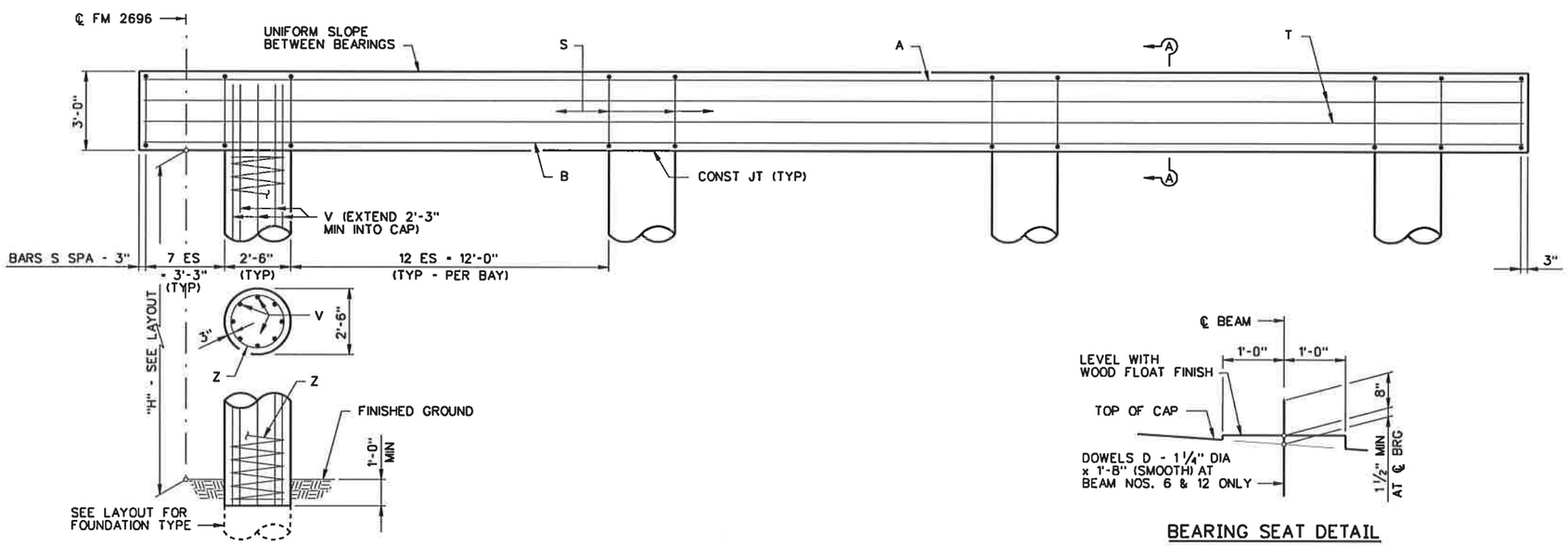

ELEVATION

BEARING SEAT DETAIL

(BEARING SURFACE TO BE CLEAN AND FREE OF ALL LOOSE MATERIAL BEFORE PLACING BEARING PAD.)

GENERAL NOTES:

1. DESIGNED ACCORDING TO 2007 AASHTO LRFD STANDARD SPECIFICATIONS (HL93 LOADING).
2. CONCRETE STRENGTH f'c = 3,600 psi.
3. ALL CAP REINFORCING TO BE GRADE 60.
4. SEE BRIDGE LAYOUT FOR FOUNDATION TYPE, SIZE AND LENGTH.
5. SEE FOUNDATION DETAIL STANDARD, FD, FOR ALL FOUNDATION DETAILS AND NOTES.
6. SEE BEAM LAYOUT FOR BEAM ANGLES.
7. CALCULATED FOUNDATION LOADS: 112 TONS/DRILLED SHAFT.

STATE OF TEXAS
THOMAS W. STEPHENSON
91178
LICENSED
PROFESSIONAL ENGINEER

Thomas W. Stephenson
10/9/07

① TABLE OF COLUMN QUANTITIES / ② TOTAL ESTIMATED QUANTITIES

"H"	CLASS "C" CONCRETE (COL)	BARS V 32 - #9		BARS Z 4 - #3 SPIRAL		② RE INF STEEL	② CLASS "C" CONCRETE
HEIGHT	CY	LENGTH	WEIGHT	LENGTH	WEIGHT	LB	CY
7'	5.1	9'-3"	1,006	100'-10"	152	4,835	21.5

① ADJUST BARS V LENGTH BY 1 FT AND BARS Z LENGTH BY 12.606' FOR EACH LINEAR FOOT OF VARIATION IN THE "H" VALUE.

② ADJUST REINFORCING STEEL TOTAL BY 128 LB AND CLASS "C" CONC TOTAL BY 0.727 CY FOR EACH LINEAR FOOT OF VARIATION IN THE "H" VALUE.

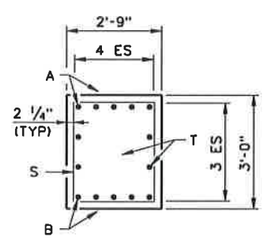

SECTION A-A

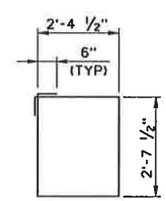

BARS S

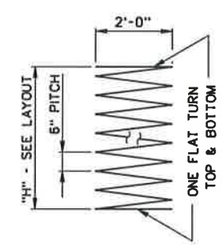

BARS Z

NO.	REVISION	BY	DATE

CP&Y Chiang, Patel & Yerby, Inc.

BEXAR COUNTY PUBLIC WORKS DIVISION

F.M. 2696 (BLANCO ROAD)

INTERIOR BENT NO. 2
PANTHER SPRINGS CREEK BRIDGE
STRUCTURE NO. 9
PHASE I

Designed: GLL	STATE	BEXAR COUNTY FILE NUMBER	PLAN SET NO. 624
Checked: TWS	TEXAS		OF 842
Drawn: LVM	COUNTY		
Checked: GLL	BEXAR	2708-01-022, ETC.	

pw:/Active Projects/BEX6102/8.00 Plans and Drawings/8.10 Cut Sheets/8.102 Bridge/(1) Structure No. 9/6102CABRBB11.999
10/9/2007 3:29:59 PM

TABLE OF CONSTANT QUANTITIES

BAR	NO.	SIZE	LENGTH	WEIGHT
A	5	#11	51'- 8"	1.373
B	5	#11	51'- 8"	1.373
D	4	1 1/8"Ø	1'- 8"	28
S	53	#5	11'- 0"	608
T	4	#5	51'- 8"	216
REINFORCING STEEL			LB	3.598
CLASS "C" CONCRETE (CAP)			CY	16.1

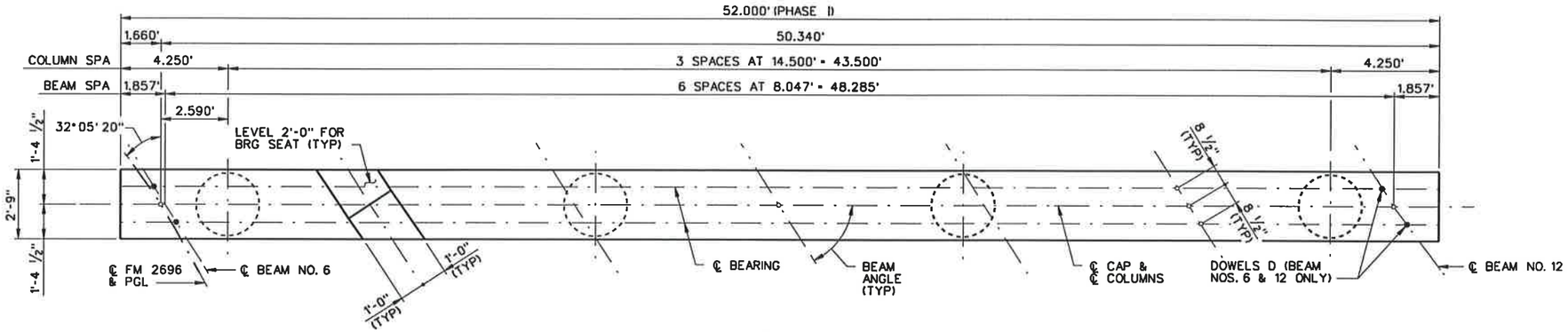

PLAN

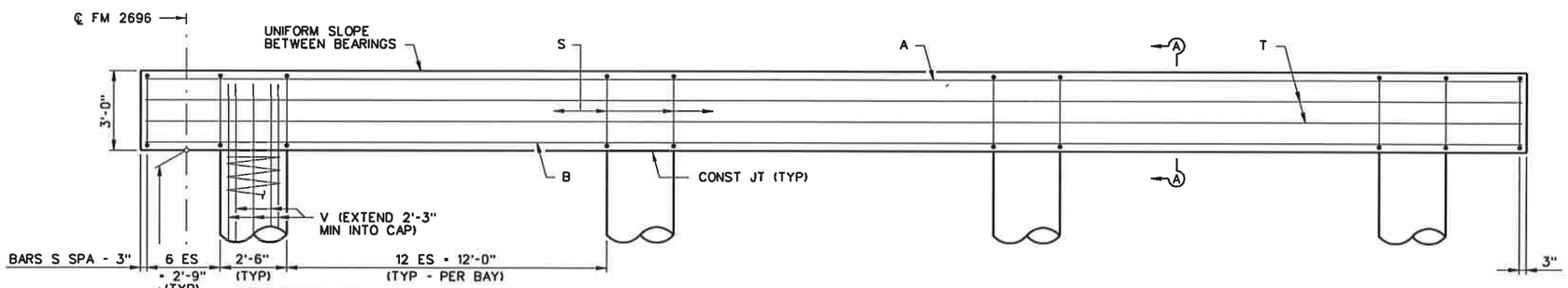

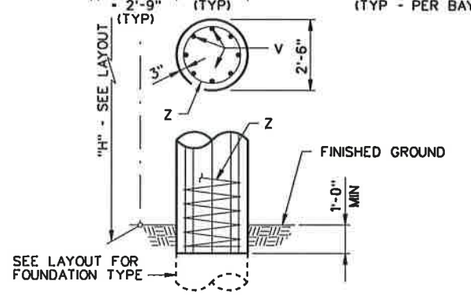

ELEVATION

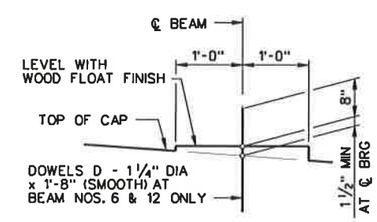

BEARING SEAT DETAIL

(BEARING SURFACE TO BE CLEAN AND FREE OF ALL LOOSE MATERIAL BEFORE PLACING BEARING PAD.)

GENERAL NOTES:

1. DESIGNED ACCORDING TO 2007 AASHTO LRFD STANDARD SPECIFICATIONS (HL93 LOADING).
2. CONCRETE STRENGTH f'c = 3.600 psi.
3. ALL CAP REINFORCING TO BE GRADE 60.
4. SEE BRIDGE LAYOUT FOR FOUNDATION TYPE, SIZE AND LENGTH.
5. SEE FOUNDATION DETAIL STANDARD, FD, FOR ALL FOUNDATION DETAILS AND NOTES.
6. SEE BEAM LAYOUT FOR BEAM ANGLES.
7. CALCULATED FOUNDATION LOADS: 112 TONS/DRILLED SHAFT.

① TABLE OF COLUMN QUANTITIES						② TOTAL ESTIMATED QUANTITIES	
"H"	CLASS "C" CONCRETE (COL)	BARS V 32 - #9		BARS Z 4 - #3 SPIRAL		REINF STEEL	CLASS "C" CONCRETE
HEIGHT	CY	LENGTH	WEIGHT	LENGTH	WEIGHT	LB	CY
6'	4.4	8'-3"	898	88'-2"	133	4.629	20.5

① ADJUST BARS V LENGTH BY 1 FT AND BARS Z LENGTH BY 12.606' FOR EACH LINEAR FOOT OF VARIATION IN THE "H" VALUE.

② ADJUST REINFORCING STEEL TOTAL BY 128 LB AND CLASS "C" CONC TOTAL BY 0.727 CY FOR EACH LINEAR FOOT OF VARIATION IN THE "H" VALUE.

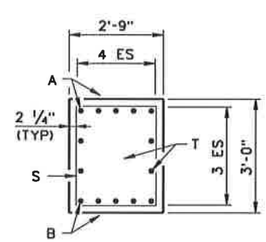

SECTION A-A

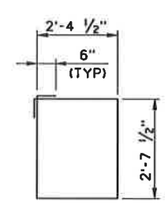

BARS S

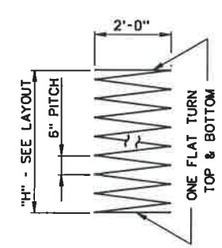

BARS Z

STATE OF TEXAS
THOMAS W. STEPHENSON
91178
LICENSED
PROFESSIONAL ENGINEER

Thomas W. Stephenson
10/9/07

NO.	REVISION	BY	DATE

CP&Y Chiang, Patel & Yerby, Inc.

BEXAR COUNTY PUBLIC WORKS DIVISION

F.M. 2696 (BLANCO ROAD)

INTERIOR BENT NO. 3
PANTHER SPRINGS CREEK BRIDGE
STRUCTURE NO. 9
PHASE I

Designed: GLL	STATE	BEXAR COUNTY FILE NUMBER	PLAN SET NO. 625
Checked: TWS	TEXAS		OF 842
Drawn: LVM	COUNTY		
Checked: GLL	BEXAR	2708-01-022, ETC.	

pw:/Active Projects/BEX6102/8.00 Plans and Drawings/8.10 Cut Sheets/8.102 Bridge/10 Structure No. 9/6102CA886813.999
10/9/2007 3:30:18 PM

TABLE OF CONSTANT QUANTITIES

BAR	NO.	SIZE	LENGTH	WEIGHT
A	5	#11	51'- 8"	1,373
B	5	#11	51'- 8"	1,373
D	4	1 1/4"Ø	1'- 8"	28
S	53	#5	11'- 0"	608
T	4	#5	51'- 8"	216
RE INFORCING STEEL			LB	3,598
CLASS "C" CONCRETE (CAP)			CY	16.1

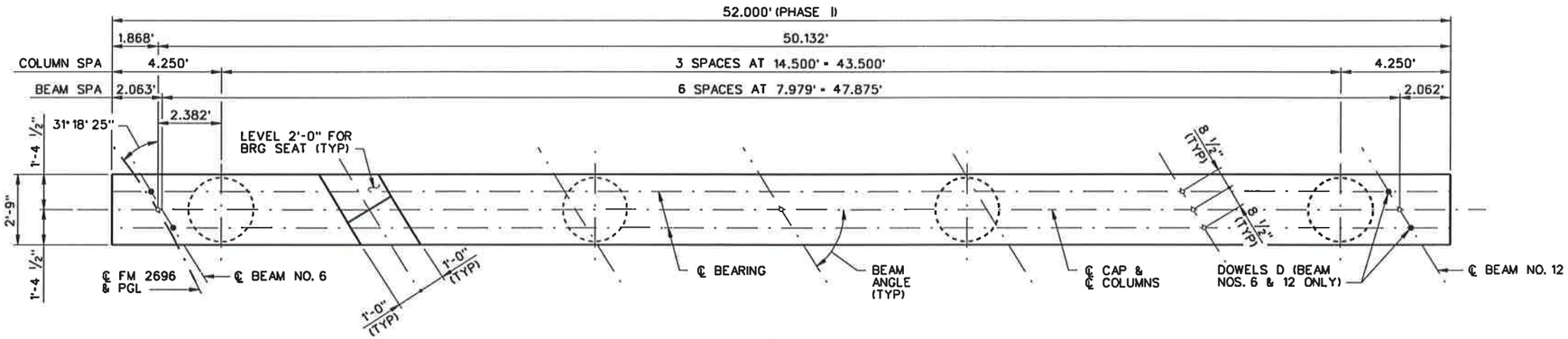

PLAN

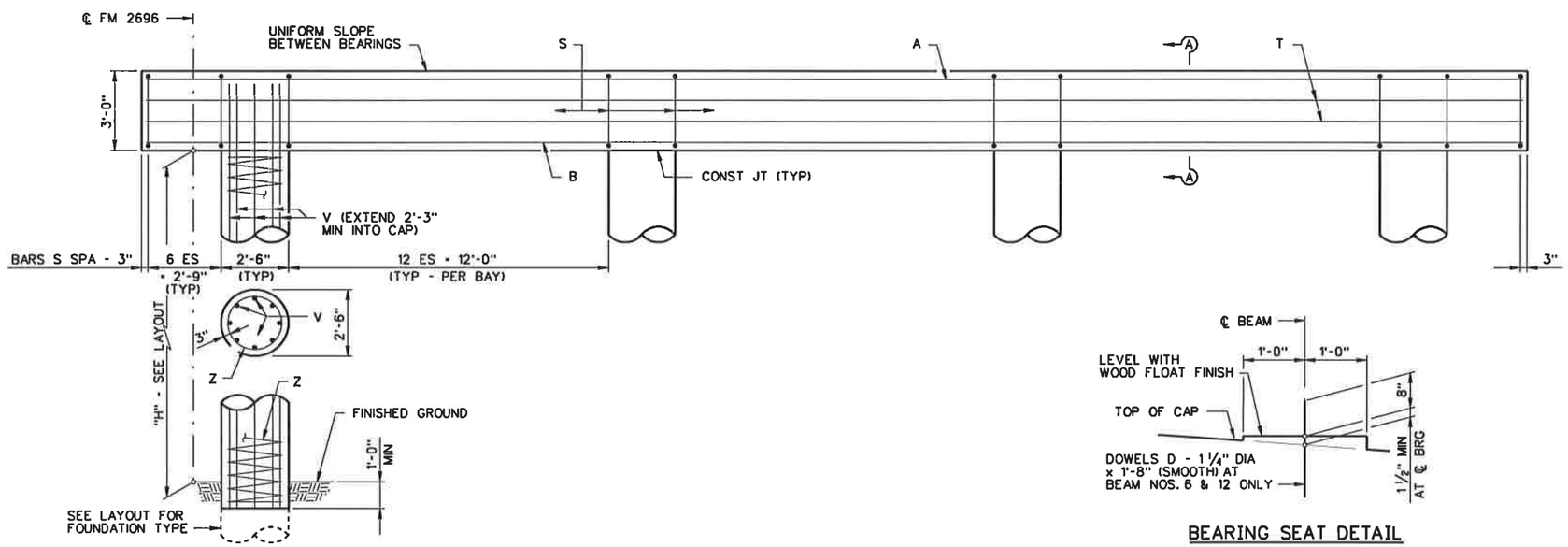

ELEVATION

BEARING SEAT DETAIL

(BEARING SURFACE TO BE CLEAN AND FREE OF ALL LOOSE MATERIAL BEFORE PLACING BEARING PAD.)

GENERAL NOTES:

1. DESIGNED ACCORDING TO 2007 AASHTO LRFD STANDARD SPECIFICATIONS (HL93 LOADING).
2. CONCRETE STRENGTH f'c = 3,600 psi.
3. ALL CAP REINFORCING TO BE GRADE 60.
4. SEE BRIDGE LAYOUT FOR FOUNDATION TYPE, SIZE AND LENGTH.
5. SEE FOUNDATION DETAIL STANDARD, FD, FOR ALL FOUNDATION DETAILS AND NOTES.
6. SEE BEAM LAYOUT FOR BEAM ANGLES.
7. CALCULATED FOUNDATION LOADS: 112 TONS/DRILLED SHAFT.

STATE OF TEXAS
THOMAS W. STEPHENSON
91178
LICENSED
PROFESSIONAL ENGINEER

Thomas W. Stephenson
10/9/07

① TABLE OF COLUMN QUANTITIES / ② TOTAL ESTIMATED QUANTITIES

"H"	CLASS "C" CONCRETE (COL)	BARS V 32 - #9		BARS Z 4 - #3 SPIRAL		② RE INF STEEL	② CLASS "C" CONCRETE
HEIGHT	CY	LENGTH	WEIGHT	LENGTH	WEIGHT	LB	CY
7'	5.1	9'-3"	1,006	100'-10"	152	4,756	21.2

① ADJUST BARS V LENGTH BY 1 FT AND BARS Z LENGTH BY 12.606' FOR EACH LINEAR FOOT OF VARIATION IN THE "H" VALUE.

② ADJUST REINFORCING STEEL TOTAL BY 128 LB AND CLASS "C" CONC TOTAL BY 0.727 CY FOR EACH LINEAR FOOT OF VARIATION IN THE "H" VALUE.

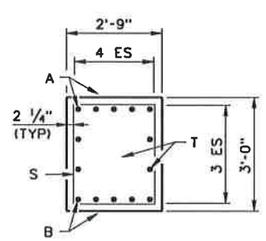

SECTION A-A

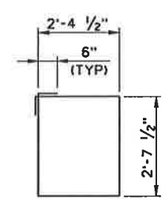

BARS S

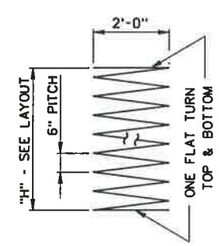

BARS Z

NO.	REVISION	BY	DATE

CP&Y Chiang, Patel & Yerby, Inc.

BEXAR COUNTY PUBLIC WORKS DIVISION

F.M. 2696 (BLANCO ROAD)

INTERIOR BENT NO. 4
PANTHER SPRINGS CREEK BRIDGE
STRUCTURE NO. 9
PHASE I

Designed: GLL	STATE	BEXAR COUNTY FILE NUMBER	PLAN SET NO. 6216
Checked: TWS	TEXAS		OF 842
Drawn: LVM	COUNTY		
Checked: GLL	BEXAR	2708-01-022, ETC	

pw:/Active Projects/BEX6102/8.00 Plans and Drawings/8.10 Cut Sheets/8.1.02 Bridge/11 Structure No. 9/6102CABRBB15.999
10/9/2007 3:30:37 PM

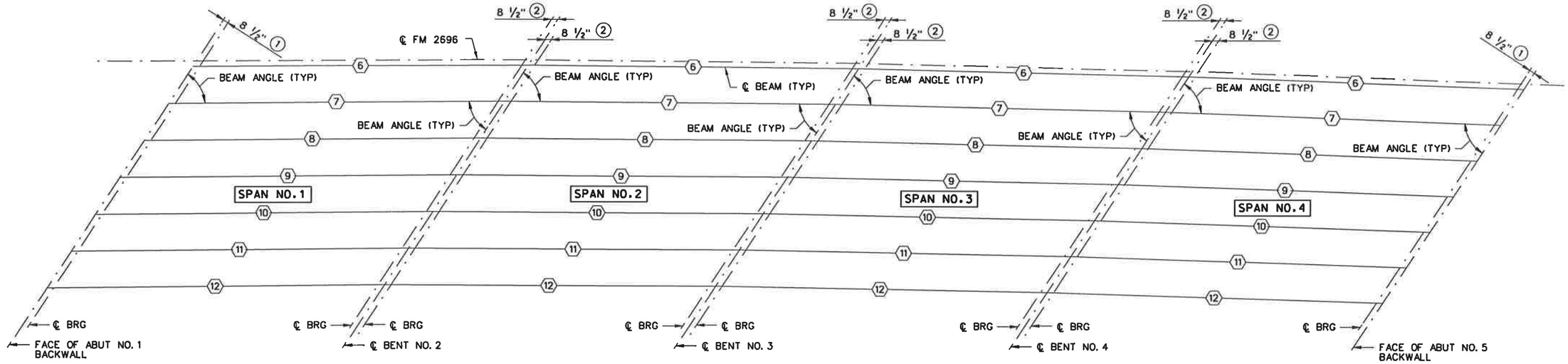

BEAM LAYOUT

BENT REPORT

BENT NO. 1 (N 57 1 6.00 W)
DISTANCE BETWEEN STATION LINE AND BEAM 1 .200 R

		BEAM SPAC. (C.L. BENT)	BEAM ANGLE D M S
SPAN 1	BEAM 6	.000	56 43 49
	BEAM 7	8.194	56 40 20
	BEAM 8	8.194	56 36 51
	BEAM 9	8.194	56 33 23
	BEAM 10	8.194	56 29 55
	BEAM 11	8.194	56 26 27
	BEAM 12	8.194	56 22 59
	TOTAL	49.163	

BENT NO. 2 (N 57 1 6.00 W)
DISTANCE BETWEEN STATION LINE AND BEAM 1 .198 R

		BEAM SPAC. (C.L. BENT)	BEAM ANGLE D M S
SPAN 1	BEAM 6	.000	56 43 49
	BEAM 7	8.119	56 40 20
	BEAM 8	8.119	56 36 51
	BEAM 9	8.119	56 33 23
	BEAM 10	8.119	56 29 55
	BEAM 11	8.119	56 26 27
	BEAM 12	8.119	56 22 59
	TOTAL	48.712	
SPAN 2	BEAM 6	.000	57 31 7
	BEAM 7	8.119	57 27 44
	BEAM 8	8.119	57 24 22
	BEAM 9	8.119	57 21 0
	BEAM 10	8.119	57 17 38
	BEAM 11	8.119	57 14 16
	BEAM 12	8.119	57 10 54
	TOTAL	48.712	

BENT NO. 3 (N 57 1 6.00 W)
DISTANCE BETWEEN STATION LINE AND BEAM 1 .197 R

		BEAM SPAC. (C.L. BENT)	BEAM ANGLE D M S
SPAN 2	BEAM 6	.000	57 31 7
	BEAM 7	8.047	57 27 44
	BEAM 8	8.047	57 24 22
	BEAM 9	8.047	57 21 0
	BEAM 10	8.047	57 17 38
	BEAM 11	8.047	57 14 16
	BEAM 12	8.047	57 10 54
	TOTAL	48.285	
SPAN 3	BEAM 6	.000	58 18 2
	BEAM 7	8.047	58 14 45
	BEAM 8	8.047	58 11 29
	BEAM 9	8.047	58 8 13
	BEAM 10	8.047	58 4 57
	BEAM 11	8.047	58 1 41
	BEAM 12	8.047	57 58 26
	TOTAL	48.285	

BENT NO. 4 (N 57 1 6.00 W)
DISTANCE BETWEEN STATION LINE AND BEAM 1 .195 R

		BEAM SPAC. (C.L. BENT)	BEAM ANGLE D M S
SPAN 3	BEAM 6	.000	58 18 2
	BEAM 7	7.979	58 14 45
	BEAM 8	7.979	58 11 29
	BEAM 9	7.979	58 8 13
	BEAM 10	7.979	58 4 57
	BEAM 11	7.979	58 1 41
	BEAM 12	7.979	57 58 26
	TOTAL	47.875	
SPAN 4	BEAM 6	.000	59 5 20
	BEAM 7	7.979	59 2 10
	BEAM 8	7.979	58 59 0
	BEAM 9	7.979	58 55 49
	BEAM 10	7.979	58 52 39
	BEAM 11	7.979	58 49 29
	BEAM 12	7.979	58 46 20
	TOTAL	47.875	

BENT NO. 5 (N 57 1 6.00 W)
DISTANCE BETWEEN STATION LINE AND BEAM 1 .194 R

		BEAM SPAC. (C.L. BENT)	BEAM ANGLE D M S
SPAN 4	BEAM 6	.000	59 5 20
	BEAM 7	7.912	59 2 10
	BEAM 8	7.912	58 59 0
	BEAM 9	7.912	58 55 49
	BEAM 10	7.912	58 52 39
	BEAM 11	7.912	58 49 29
	BEAM 12	7.912	58 46 20
	TOTAL	47.474	

BEAM REPORT

BEAM REPORT, SPAN 1

	HORIZONTAL DISTANCE C-C BENT	C-C BRG.	TRUE DISTANCE BOT. BM. FLG. (3)	BEAM SLOPE
BEAM 6	62.001	60.445	61.63	.00186
BEAM 7	62.042	60.486	61.68	.00194
BEAM 8	62.083	60.527	61.72	.00201
BEAM 9	62.125	60.567	61.76	.00209
BEAM 10	62.166	60.608	61.80	.00216
BEAM 11	62.208	60.649	61.84	.00224
BEAM 12	62.249	60.690	61.88	.00232

BEAM REPORT, SPAN 2

	HORIZONTAL DISTANCE C-C BENT	C-C BRG.	TRUE DISTANCE BOT. BM. FLG. (3)	BEAM SLOPE
BEAM 6	61.000	59.584	60.67	.00087
BEAM 7	61.039	59.622	60.71	.00095
BEAM 8	61.077	59.660	60.74	.00102
BEAM 9	61.115	59.699	60.78	.00109
BEAM 10	61.154	59.737	60.82	.00116
BEAM 11	61.192	59.776	60.86	.00124
BEAM 12	61.231	59.814	60.90	.00131

BEAM REPORT, SPAN 3

	HORIZONTAL DISTANCE C-C BENT	C-C BRG.	TRUE DISTANCE BOT. BM. FLG. (3)	BEAM SLOPE
BEAM 6	61.000	59.584	60.67	-.00010
BEAM 7	61.036	59.620	60.70	-.00003
BEAM 8	61.072	59.656	60.74	.00003
BEAM 9	61.108	59.692	60.78	.00010
BEAM 10	61.145	59.728	60.81	.00017
BEAM 11	61.181	59.764	60.85	.00024
BEAM 12	61.217	59.800	60.88	.00031

BEAM REPORT, SPAN 4

	HORIZONTAL DISTANCE C-C BENT	C-C BRG.	TRUE DISTANCE BOT. BM. FLG. (3)	BEAM SLOPE
BEAM 6	62.000	60.466	61.64	-.00109
BEAM 7	62.035	60.500	61.67	-.00102
BEAM 8	62.069	60.534	61.71	-.00096
BEAM 9	62.104	60.568	61.74	-.00089
BEAM 10	62.138	60.602	61.78	-.00083
BEAM 11	62.173	60.636	61.81	-.00076
BEAM 12	62.207	60.671	61.85	-.00070

⬡ DENOTES BEAM NUMBER.

(1) MEASURED PERPENDICULAR TO ABUTMENT BACKWALL.

(2) MEASURED ALONG ℄ BEAM.

(3) BEAM LENGTHS SHOWN ARE BOTTOM BEAM FLANGE LENGTHS WITH ADJUSTMENTS MADE FOR BEAM SLOPE.

STATE OF TEXAS
THOMAS W. STEPHENSON
91178
LICENSED PROFESSIONAL ENGINEER

Thomas W. Stephenson
10/9/07

NO.	REVISION	BY	DATE

CP&Y Chiang, Patel & Yerby, Inc.

BEXAR COUNTY
PUBLIC WORKS DIVISION

F.M. 2696 (BLANCO ROAD)

BEAM LAYOUT
PANTHER SPRINGS CREEK BRIDGE
STRUCTURE NO. 9
PHASE I

Designed: GLL	STATE	BEXAR COUNTY FILE NUMBER	PLAN SET NO. 627
Checked: TWS	TEXAS		
Drawn: MC	COUNTY		OF 842
Checked: GLL	BEXAR	2708-01-022, ETC	

pw:/Active Projects/BEX6102/8.00 Plans and Drawings/8.10 Cut Sheets/8.1.02 Bridge/19 Structure No. 9/6102C4BRG11.999
10/9/2007 3:28:54 PM

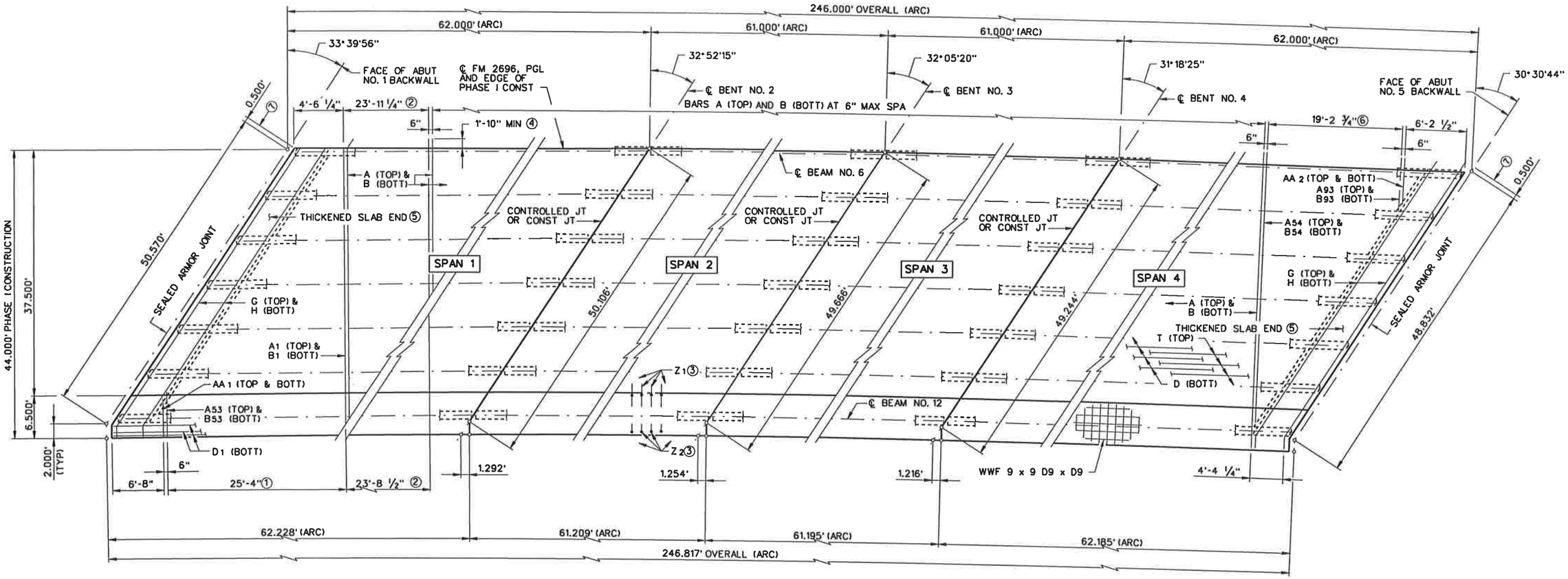

① BARS $A_{1\text{-}53}$ (TOP) AND BARS $B_{1\text{-}53}$ (BOTT) AT 6" MAX SPACING.

② BARS A (TOP) AND BARS B (BOTT) AT 6" MAX SPACING.

③ BARS Z_1 AND Z_2 AT 1'-6" MAX SPACING.

④ EXTEND BARS A, B, G AND H 1'-10" MIN INTO PHASE II CONSTRUCTION.

⑤ THICKENED SLAB END - SEE IBTS FOR BARS G, H, J AND M.

⑥ BARS $A_{54\text{-}93}$ (TOP) AND BARS $B_{54\text{-}93}$ (BOTT) AT 6" MAX SPACING.

⑦ END OF ARMOR PLATE (PHASE I).

PLAN

TABLE OF ESTIMATED QUANTITIES

SPAN	REINF CONCRETE SLAB	PRESTR CONCRETE BEAMS (TY B)⑧	CLASS "S" CONCRETE ⑩	REINF STEEL ⑨
NO.	SF	LF	CY	LB
1	2,734	432.31	76.7	18,318
2	2,689	425.48	75.4	18,016
3	2,689	425.43	75.4	18,016
4	2,733	432.20	76.7	18,311
TOTAL	10,845	1,715.42	304.2	72,661

⑧ BEAM LENGTHS SHOWN ARE BOTTOM BEAM FLANGE LENGTHS WITH ADJUSTMENTS MADE FOR BEAM SLOPE. SEE BEAM LAYOUT FOR BEAM LENGTHS.

⑨ REINFORCING STEEL WEIGHT IS CALCULATED USING AN APPROXIMATE FACTOR OF 6.7 LBS/SF. WEIGHT INCLUDES SIDEWALK REINFORCING.

⑩ INCLUDES SIDEWALK CONCRETE.

GENERAL NOTES:

1. DESIGNED ACCORDING TO 2007 AASHTO LRFD STANDARD SPECIFICATIONS (HL93 LOADING).
2. CONCRETE STRENGTH f'c = 4,000 psi.
3. ALL REINFORCING TO BE GRADE 60.
4. SEE MISC SLAB DETAILS SHEET FOR ADDITIONAL INFORMATION.
5. SEE IBTS STANDARD FOR THICKENED SLAB END DETAILS.
6. SEE IBMS STANDARD FOR MISCELLANEOUS SLAB DETAILS.
7. SEE PCP OR PMDF STANDARDS FOR DETAILS AND QUANTITY ADJUSTMENTS IF EITHER OF THESE OPTIONS IS USED.
8. BAR LAPS, WHERE REQUIRED, WILL BE AS FOLLOWS: #4 = 1'-5"
   #5 = 1'-9"

STATE OF TEXAS
THOMAS W. STEPHENSON
91178
LICENSED
PROFESSIONAL ENGINEER
Thomas W. Stephenson
10/9/07

NO.	REVISION	BY	DATE

CP&Y Chiang, Patel & Yerby, Inc.

BEXAR COUNTY PUBLIC WORKS DIVISION

F.M. 2696 (BLANCO ROAD)

246.00' PRESTR CONC BM UNIT
PANTHER SPRINGS CREEK BRIDGE
STRUCTURE NO. 9
PHASE I SHEET 1 OF 2

Designed: GLL	STATE	BEXAR COUNTY FILE NUMBER	PLAN SET NO. 628
Checked: TWS	TEXAS		OF
Drawn: MCB	COUNTY		847
Checked: GLL	BEXAR	2708-01-022, ETC.	

pw:/Active Projects/BEX6102/8.00 Plans and Drawings/8.10 Cut Sheets/8.102 Bridge/10 Structure No. 9/6102CABRGS11.999
10/9/2007 3:29:20 PM

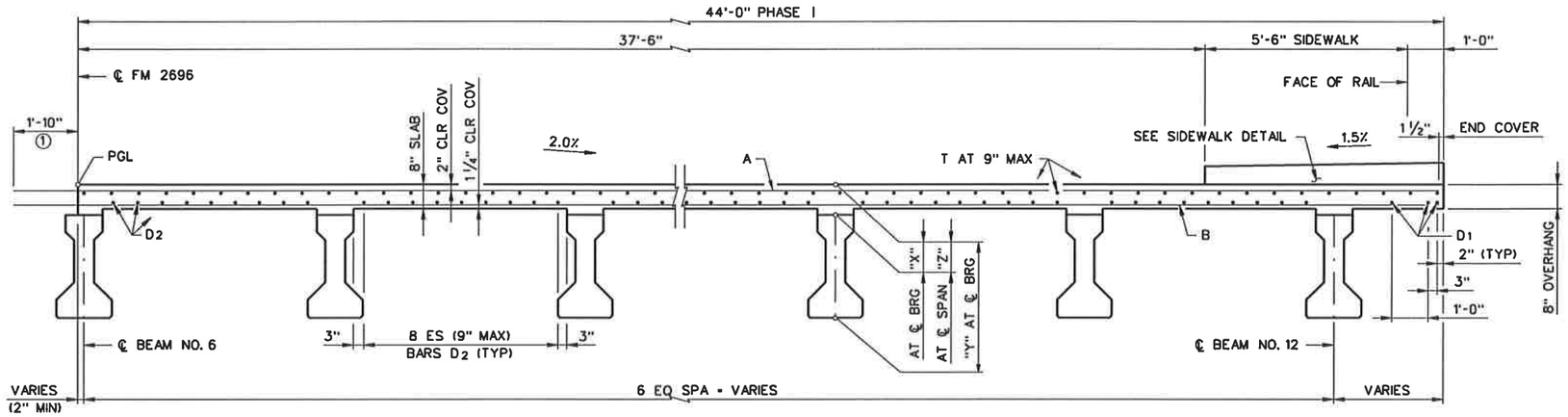

TYPICAL TRANSVERSE SECTION
(SHOWING SLAB)

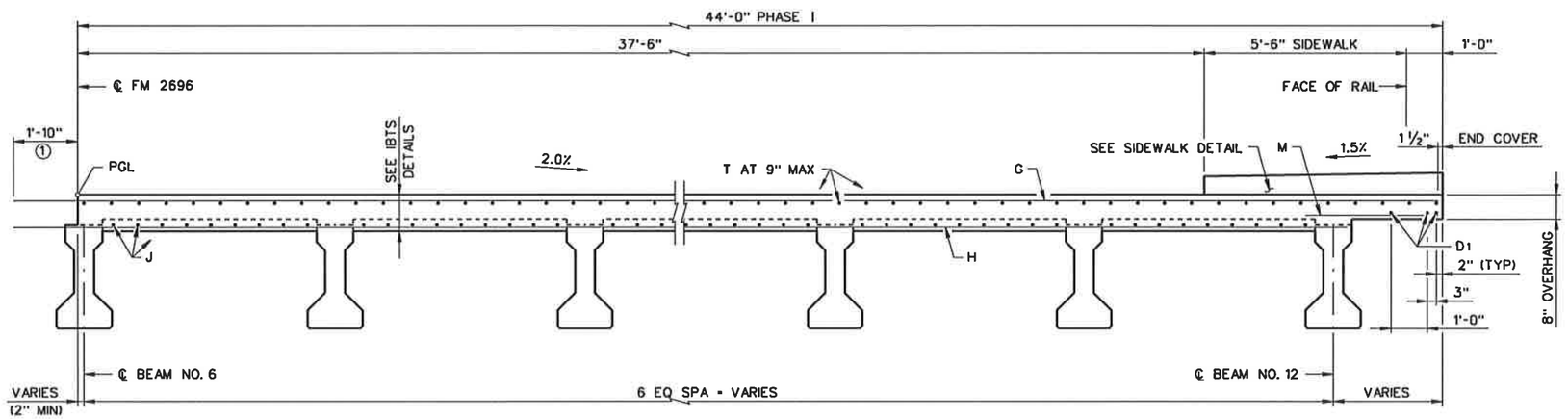

① EXTEND BARS A, B, G AND H 1'-10" MIN INTO PHASE II CONSTRUCTION.

TYPICAL TRANSVERSE SECTION
(SHOWING THICKENED SLAB END)

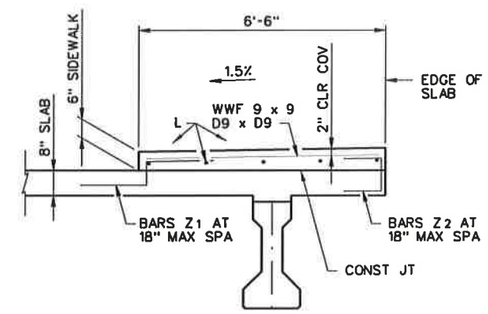

SIDEWALK DETAIL

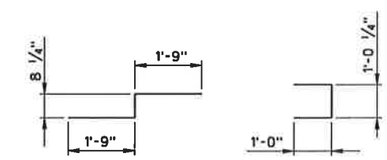

BARS Z1 BARS Z2

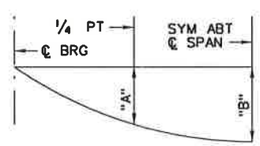

NOTE: DEFLECTIONS SHOWN ARE DUE TO SLAB CONCRETE ONLY, (Ec = 5 x 10^6 PSI). CALCULATED DEFLECTIONS SHOWN ARE THEORETICAL AND ACTUAL DIMENSIONS MAY BE LESS. DEFLECTIONS TO BE ADJUSTED BASED ON FIELD OBSERVATION.

SPAN NO.	BEAM NO.	"A" FT	"B" FT
1 & 4	6	0.058	0.082
1 & 4	7-11	0.057	0.080
1 & 4	12	0.054	0.075
2 & 3	6	0.062	0.088
2 & 3	7-11	0.061	0.086
2 & 3	12	0.057	0.080

DEAD LOAD
DEFLECTION DIAGRAM

TABLE OF SECTION DEPTHS

SPAN NO.	BEAM NO.	"X" AT ℄ BRG	"Y" AT ℄ BRG	"Z" AT ℄ SPAN ②
1 & 4	ALL	10 3/4"	3'-8 3/4"	8 7/8"
2 & 3	6	10 3/4"	3'-8 3/4"	9 1/4"
2 & 3	7-12	10 3/4"	3'-8 3/4"	9 1/8"

② THEORETICAL DIMENSION

BAR TABLE

BAR	SIZE
A	#5
B	#5
D	#5
G	#5
H	#5
J	#5
K	#5
M	#5
T	#4
Z	#4

STATE OF TEXAS
THOMAS W. STEPHENSON
91178
LICENSED
PROFESSIONAL ENGINEER

Thomas W. Stephenson
10/9/07

NO.	REVISION	BY	DATE

CP&Y Chiang, Patel & Yerby, Inc.

BEXAR COUNTY
PUBLIC WORKS DIVISION

F.M. 2696 (BLANCO ROAD)

246.00' PRESTR CONC BM UNIT
PANTHER SPRINGS CREEK BRIDGE
STRUCTURE NO. 9
PHASE I

SHEET 2 OF 2

Designed: GLL	STATE	BEXAR COUNTY FILE NUMBER	PLAN SET NO. 629
Checked: TWS	TEXAS		OF 842
Drawn: LVM	COUNTY		
Checked: GLL	BEXAR	2708-01-022, ETC.	

pw:/Active Projects/BEX6102/8.00 Plans and Drawings/8.10 Cut Sheets/8.1.02 Bridge/(1) Structure No. 9/6102CABBS12.999
10/9/2007 3:29:30 PM

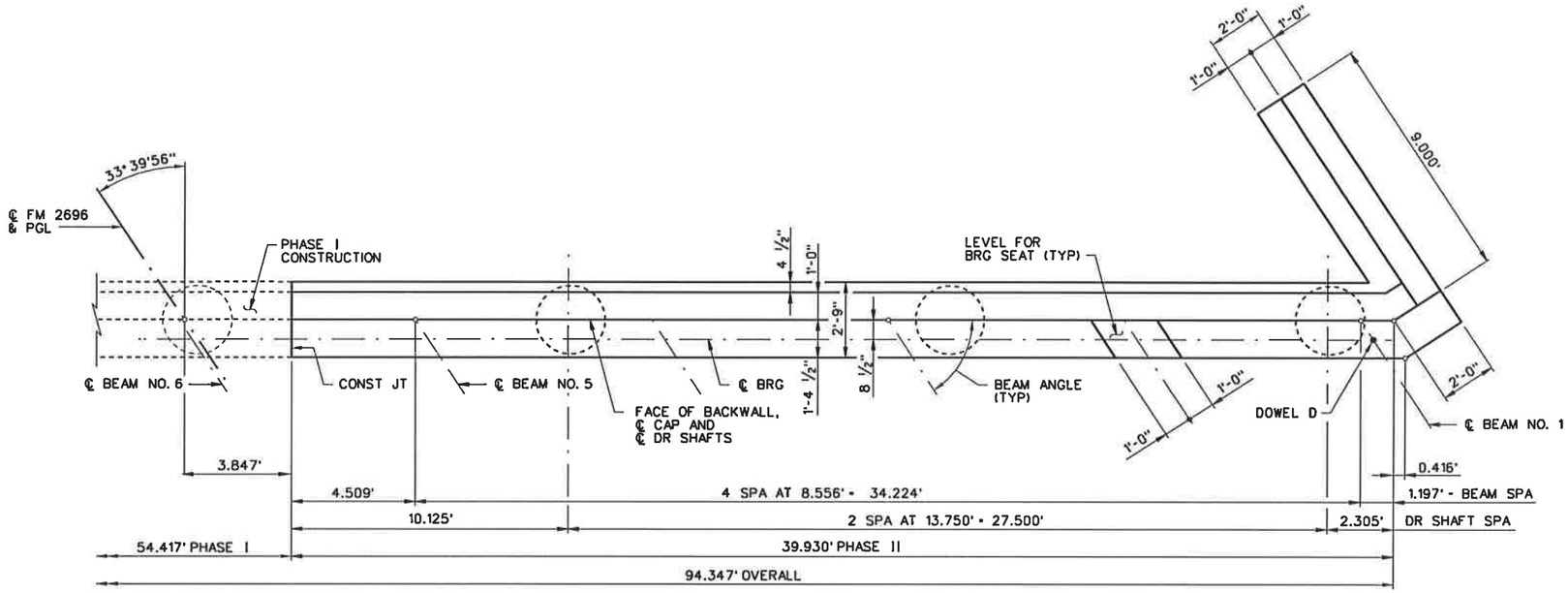

PLAN

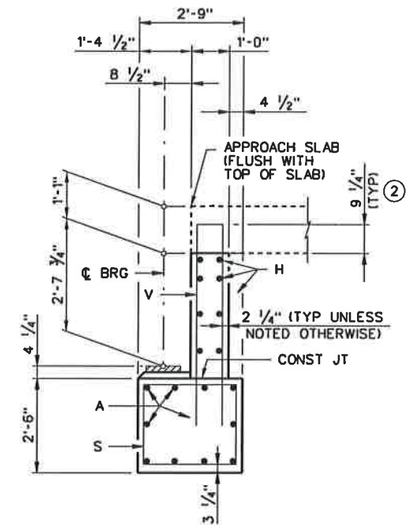

SECTION A-A

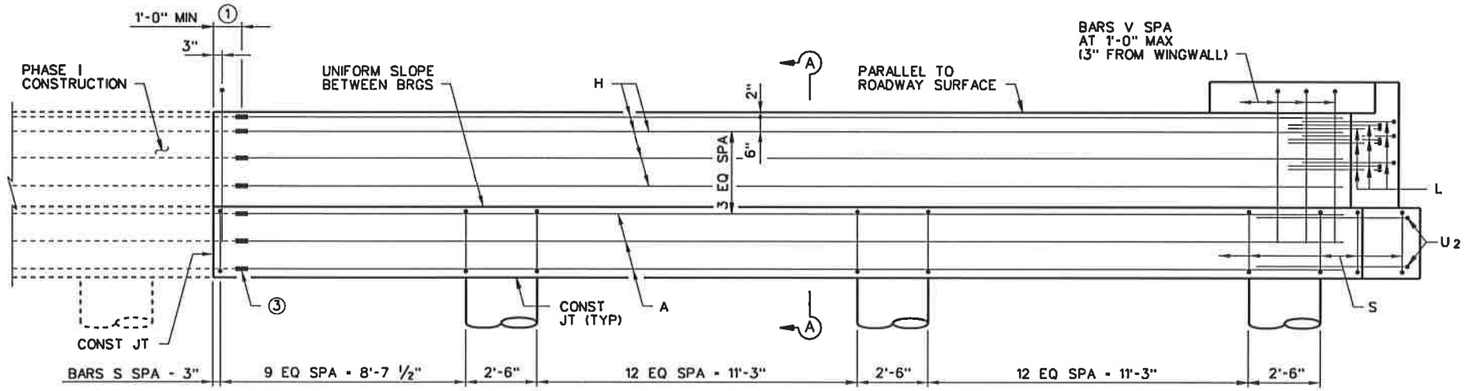

ELEVATION

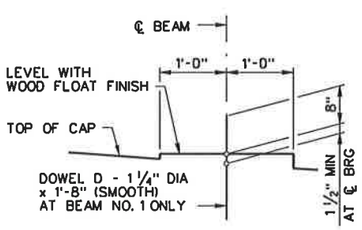

BEARING SEAT DETAIL

(BEARING SURFACE TO BE CLEAN AND FREE OF ALL LOOSE MATERIAL BEFORE PLACING BEARING PAD.)

① EXTEND BARS A & H 1'-0" MIN INTO PHASE II CONSTRUCTION.

② INCREASE AS REQUIRED TO MAINTAIN 3 ¾" FROM FINISHED GRADE.

③ SPLICE BARS A AND H BY WELDING IN ACCORDANCE WITH ITEM 448 "STRUCTURAL FIELD WELDING", OR BY USING CLASS "B" MECHANICAL COUPLERS.

GENERAL NOTES:

1. DESIGNED ACCORDING TO 2007 AASHTO LRFD SPECIFICATIONS (HL93 LOADING).
2. CONCRETE STRENGTH f'c = 3,600 psi.
3. ALL REINFORCING TO BE GRADE 60.
4. SEE BRIDGE LAYOUT FOR FOUNDATION TYPE, SIZE AND LENGTH.
5. SEE FOUNDATION DETAIL STANDARD SHEET, FD, FOR ALL FOUNDATION DETAILS AND NOTES.
6. SEE BEAM LAYOUT FOR BEAM ANGLES.
7. CALCULATED FOUNDATION LOADS: 63 TONS/DRILLED SHAFT.
8. SEE STANDARD AJ ARMOR JT DETAILS. SEE SPAN DETAILS FOR LENGTH OF AJ TO BE PLACED WITH ABUTMENT.

STATE OF TEXAS
THOMAS W. STEPHENSON
91178
LICENSED
PROFESSIONAL ENGINEER

Thomas W. Stephenson
10/9/07

NO.	REVISION	BY	DATE

CP&Y Chiang, Patel & Yerby, Inc.

BEXAR COUNTY PUBLIC WORKS DIVISION

F.M. 2696 (BLANCO ROAD)
ABUTMENT NO. 1
PANTHER SPRINGS CREEK BRIDGE
STRUCTURE NO. 9
PHASE II

SHEET 1 OF 2

Designed: GLL	STATE	BEXAR COUNTY FILE NUMBER	PLAN SET NO. 030
Checked: TWS	TEXAS		
Drawn: KH	COUNTY		OF
Checked: GLL	BEXAR	2708-01-022, ETC.	342

pw:/Active Projects/BEX6102/8.00 Plans and Drawings/8.10 Cut Sheets/8.1.02 Bridge/11 Structure No. 9/6102CABRAS13.999
10/9/2007 3:28:00 PM

TABLE OF ESTIMATED QUANTITIES

BAR	NO.	SIZE	LENGTH	WEIGHT
A	10	#11	38'-8"	2,054
D	1	1 1/4"Ø	1'-8"	7
H	10	#5	38'-9"	404
L	9	#6	5'-8"	77
S	40	#4	9'-8"	258
U	2	#6	11'-9"	35
V	41	#5	10'-8"	456
wH1	7	#6	10'-1"	106
wH2	10	#6	8'-8"	130
wS	10	#4	7'-9"	52
wV	10	#5	10'-11"	114
RE INFORCING STEEL			LB	3,693
CLASS "C" CONCRETE			CY	18.0

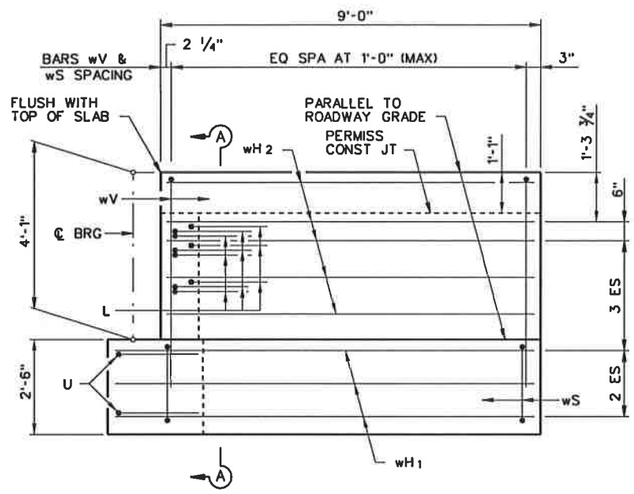

WINGWALL ELEVATION

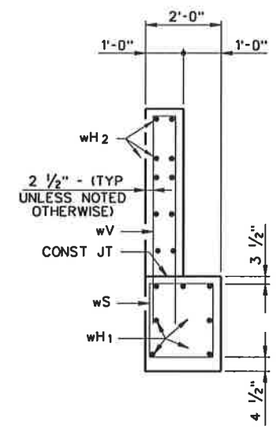

SECTION A-A

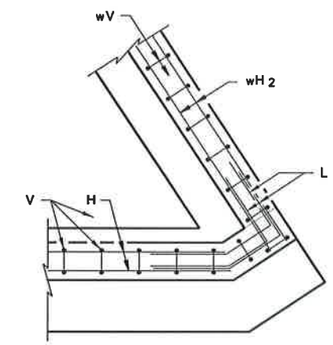

BACKWALL

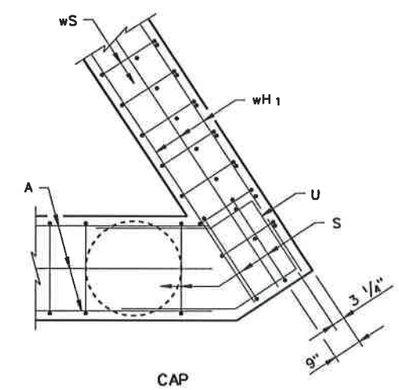

CAP

CORNER DETAILS

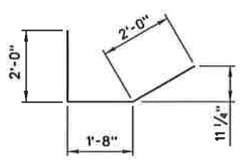

BARS L

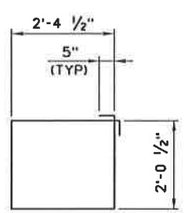

BARS S

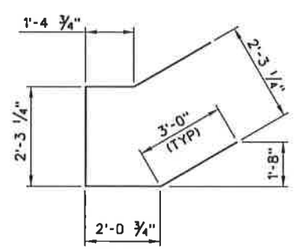

BARS U

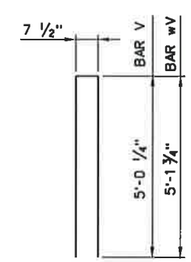

BARS V & wV

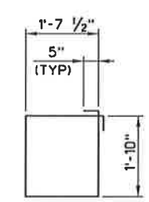

BARS wS

STATE OF TEXAS
THOMAS W. STEPHENSON
91178
LICENSED
PROFESSIONAL ENGINEER

Thomas W. Stephenson
10/9/07

NO.	REVISION	BY	DATE

CP&Y Chiang, Patel & Yerby, Inc.

BEXAR COUNTY
PUBLIC WORKS DIVISION

F.M. 2696 (BLANCO ROAD)

ABUTMENT NO. 1
PANTHER SPRINGS CREEK BRIDGE
STRUCTURE NO. 9
PHASE II

SHEET 2 OF 2

Designed: GLL	STATE	BEXAR COUNTY FILE NUMBER	PLAN SET NO. 631
Checked: TWS	TEXAS		
Drawn: KH	COUNTY		OF
Checked: GLL	BEXAR	2708-01-022, ETC.	842

pw:/Active Projects/BEX6102/8.10 Plans and Drawings/8.10 Cut Sheets/8.1.02 Bridge/11 Structure No. 9/6102CABRAS14.999
10/9/2007 3:28:08 PM

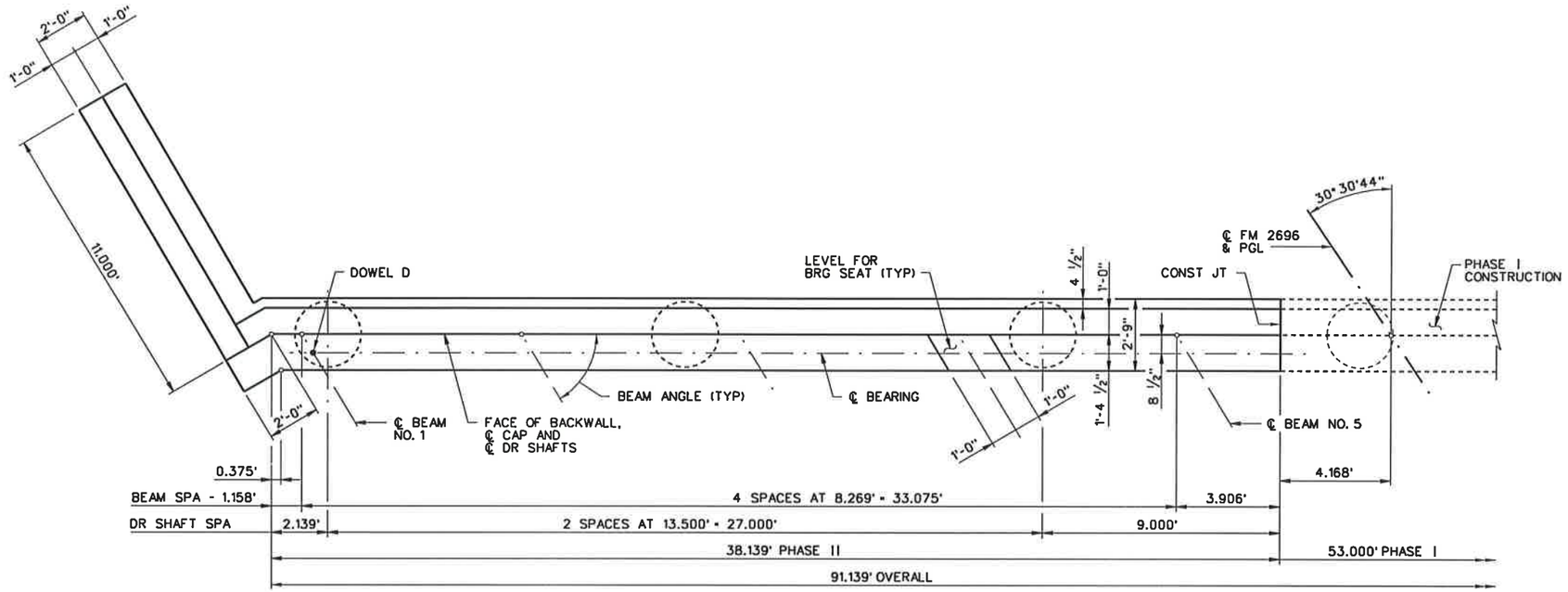

PLAN

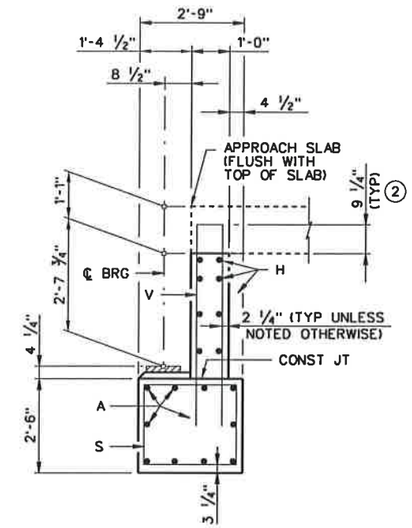

SECTION A-A

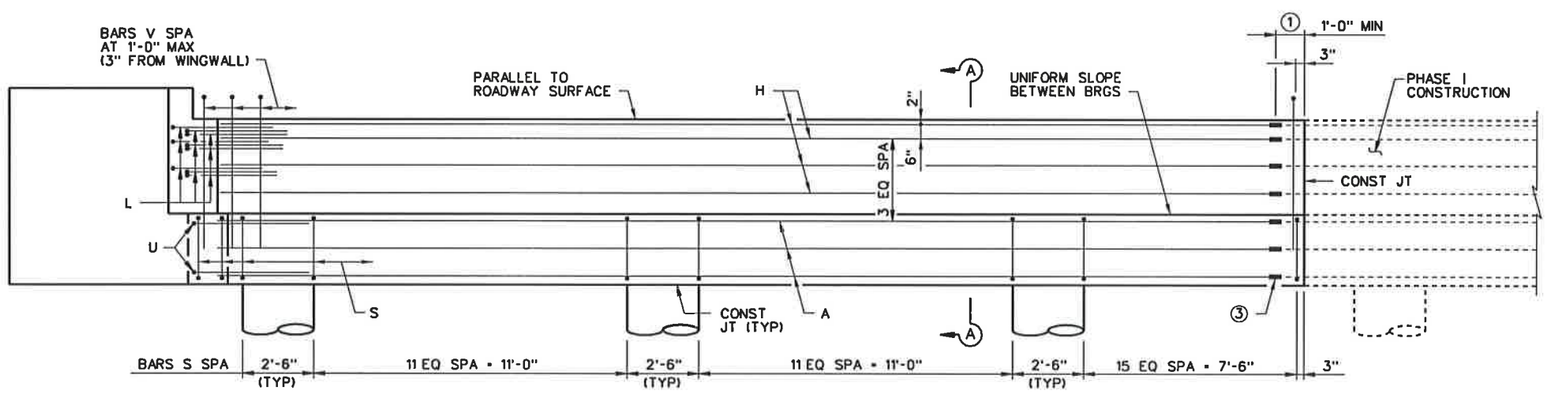

ELEVATION

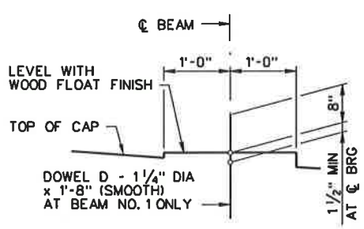

BEARING SEAT DETAIL

(BEARING SURFACE TO BE CLEAN AND FREE OF ALL LOOSE MATERIAL BEFORE PLACING BEARING PAD.)

① EXTEND BARS A & H 1'-0" MIN INTO PHASE II CONSTRUCTION.

② INCREASE AS REQUIRED TO MAINTAIN 3 3/4" FROM FINISHED GRADE.

③ SPLICE BARS A AND H BY WELDING IN ACCORDANCE WITH ITEM 448 "STRUCTURAL FIELD WELDING", OR BY USING CLASS "B" MECHANICAL COUPLERS.

GENERAL NOTES:

1. DESIGNED ACCORDING TO 2007 AASHTO LRFD SPECIFICATIONS (HL93 LOADING).
2. CONCRETE STRENGTH f'c = 3,600 psi.
3. ALL REINFORCING TO BE GRADE 60.
4. SEE BRIDGE LAYOUT FOR FOUNDATION TYPE, SIZE AND LENGTH.
5. SEE FOUNDATION DETAIL STANDARD SHEET, FD, FOR ALL FOUNDATION DETAILS AND NOTES.
6. SEE BEAM LAYOUT FOR BEAM ANGLES.
7. CALCULATED FOUNDATION LOADS: 63 TONS/DRILLED SHAFT.
8. SEE STANDARD AJ ARMOR JT DETAILS. SEE SPAN DETAILS FOR LENGTH OF AJ TO BE PLACED WITH ABUTMENT.

STATE OF TEXAS
THOMAS W. STEPHENSON
91178
LICENSED
PROFESSIONAL ENGINEER
Thomas W. Stephenson
10/9/07

NO.	REVISION	BY	DATE

CP&Y Chiang, Patel & Yerby, Inc.

BEXAR COUNTY
PUBLIC WORKS DIVISION

F.M. 2696 (BLANCO ROAD)

ABUTMENT NO. 5
PANTHER SPRINGS CREEK BRIDGE
STRUCTURE NO. 9
PHASE II SHEET 1 OF 2

Designed: GLL	STATE	BEXAR COUNTY FILE NUMBER	PLAN SET NO.
Checked: TWS	TEXAS		632
Drawn: MCB	COUNTY		OF
Checked: GLL	BEXAR	2708-01-022, ETC.	842

pw:/Active Projects/BEX6102/8.00 Plans and Drawings/8.10 Cut Sheets/8.1.02 Bridge/(1) Structure No. 9/6102CABRA517.999
10/9/2007 3:28:37 PM

TABLE OF ESTIMATED QUANTITIES

BAR	NO.	SIZE	LENGTH	WEIGHT
A	10	#11	37'- 2"	1,975
D	1	1 1/4"Ø	1'- 8"	7
H	8	#5	37'- 6"	313
L	9	#6	6'- 0"	81
S	43	#4	9'- 8"	228
U	2	#6	11'- 9"	35
V	39	#5	10'-8"	434
wH1	7	#6	12'- 1"	127
wH2	10	#6	10'- 8"	160
wS	12	#4	7'- 9"	62
wV	12	#5	10'-11"	137
REINFORCING STEEL			LB	3,559
CLASS "C" CONCRETE			CY	18.1

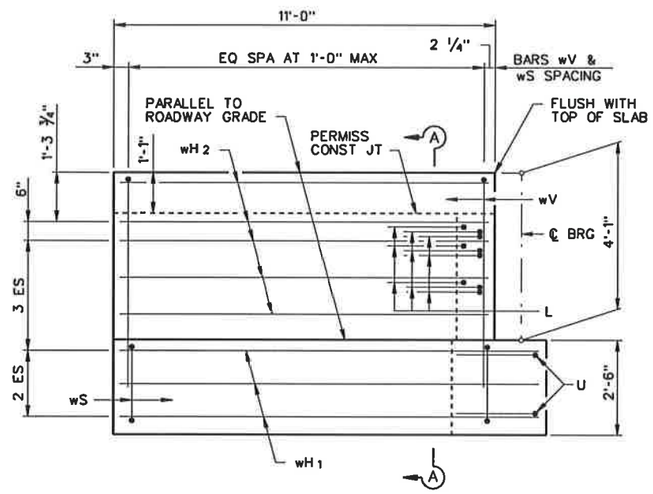

WINGWALL ELEVATION

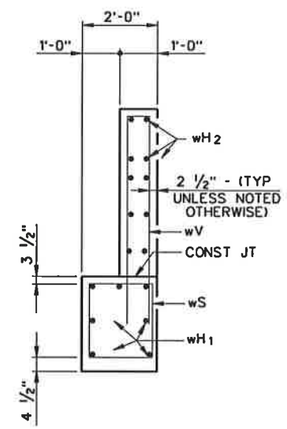

SECTION A-A

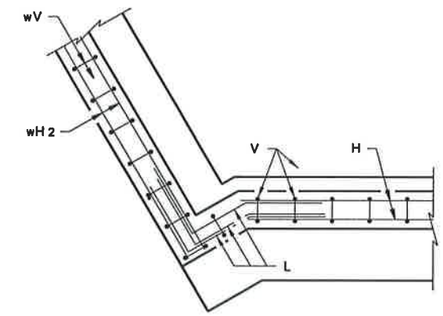

BACKWALL

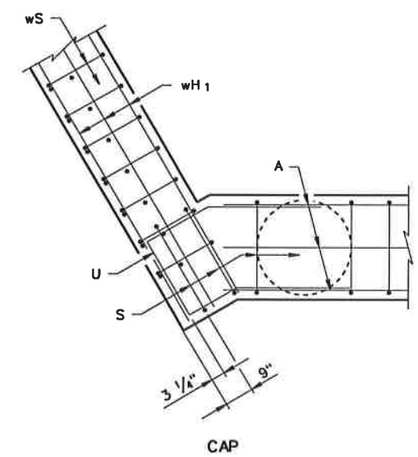

CAP

CORNER DETAILS

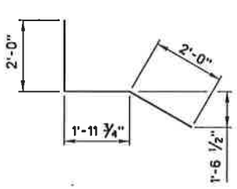

BARS L

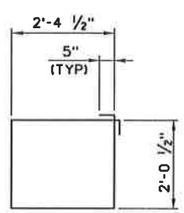

BARS S

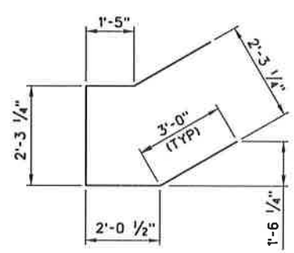

BARS U

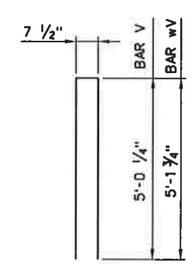

BARS V & wV

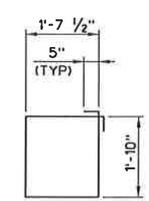

BARS wS

STATE OF TEXAS
THOMAS W. STEPHENSON
91178
LICENSED
PROFESSIONAL ENGINEER

Thomas W. Stephenson
10/9/07

NO.	REVISION	BY	DATE

CP&Y Chiang, Patel & Yerby, Inc.

BEXAR COUNTY
PUBLIC WORKS DIVISION

F.M. 2696 (BLANCO ROAD)
ABUTMENT NO. 5
PANTHER SPRINGS CREEK BRIDGE
STRUCTURE NO. 9
PHASE II SHEET 2 OF 2

Designed: GLL	STATE	BEXAR COUNTY FILE NUMBER	PLAN SET NO.
Checked: TWS	TEXAS		633
Drawn: MCB	COUNTY		OF
Checked: GLL	BEXAR	2708-01-022, ETC.	842

pw:/Active Projects/BEX6102/8.00 Plans and Drawings/8.10 Cut Sheets/8.1.02 Bridge/(1) Structure No. 9/6102CABRAS18.999
10/9/2007 3:28:46 PM

TABLE OF CONSTANT QUANTITIES

BAR	NO.	SIZE	LENGTH	WEIGHT
A	5	#11	37'-8"	1,001
B	5	#11	37'-8"	1,001
D	2	1 1/4"Ø	1'- 8"	14
S	40	#5	11'-0"	459
T	4	#5	37'-8"	157
RE INFORCING STEEL			LB	2,632
CLASS "C" CONCRETE (CAP)			CY	11.8

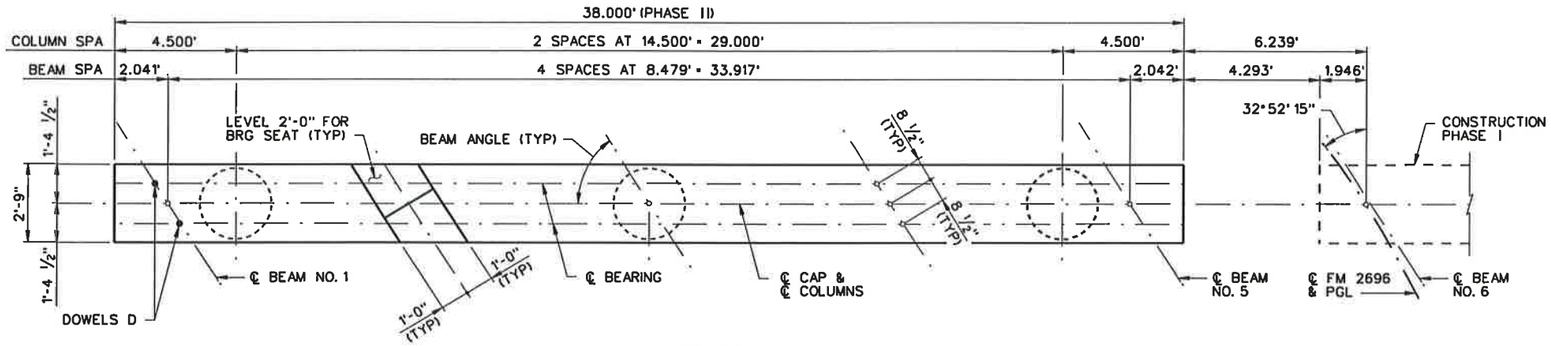

PLAN

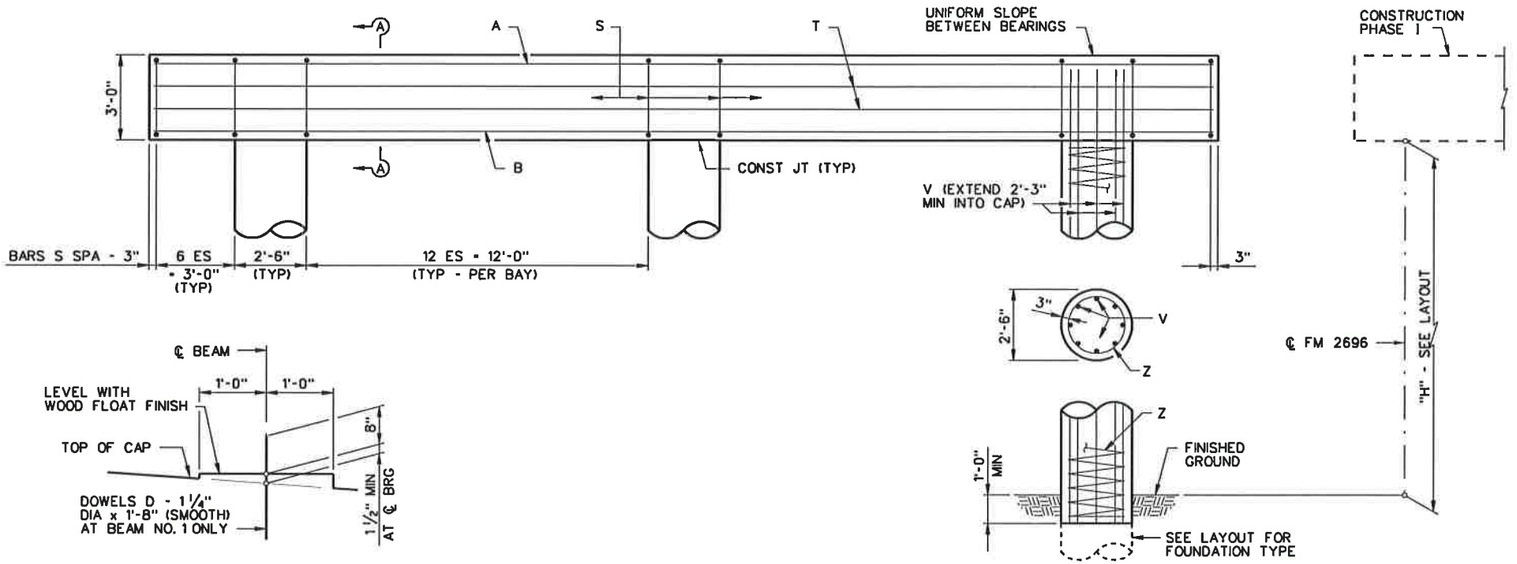

ELEVATION

BEARING SEAT DETAIL

(BEARING SURFACE TO BE CLEAN AND FREE OF ALL LOOSE MATERIAL BEFORE PLACING BEARING PAD.)

① TABLE OF COLUMN QUANTITIES

"H"	CLASS "C" CONCRETE (COL)	BARS V 24 - #9		BARS Z 3 - #3 SPIRAL		② TOTAL ESTIMATED QUANTITIES	
						RE INF STEEL	CLASS "C" CONCRETE
HEIGHT	CY	LENGTH	WEIGHT	LENGTH	WEIGHT	LB	CY
7'	3.8	9'-3"	755	100'-10"	114	3,501	15.6

① ADJUST BARS V LENGTH BY 1 FT AND BARS Z LENGTH BY 12.606' FOR EACH LINEAR FOOT OF VARIATION IN THE "H" VALUE.

② ADJUST REINFORCING STEEL TOTAL BY 96 LB AND CLASS "C" CONC TOTAL BY 0.545 CY FOR EACH LINEAR FOOT OF VARIATION IN THE "H" VALUE.

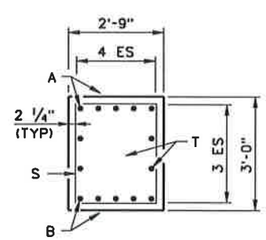

SECTION A-A

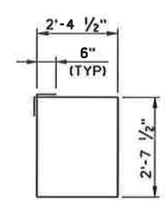

BARS S

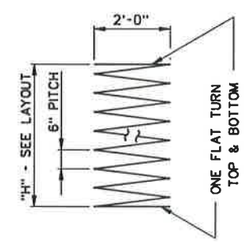

BARS Z

GENERAL NOTES:

1. DESIGNED ACCORDING TO 2007 AASHTO LRFD STANDARD SPECIFICATIONS (HL93 LOADING).
2. CONCRETE STRENGTH f'c = 3,600 psi.
3. ALL CAP REINFORCING TO BE GRADE 60.
4. SEE BRIDGE LAYOUT FOR FOUNDATION TYPE, SIZE AND LENGTH.
5. SEE FOUNDATION DETAIL STANDARD, FD, FOR ALL FOUNDATION DETAILS AND NOTES.
6. SEE BEAM LAYOUT FOR BEAM ANGLES.
7. CALCULATED FOUNDATION LOADS: 112 TONS/DRILLED SHAFT.

STATE OF TEXAS
THOMAS W. STEPHENSON
91178
LICENSED
PROFESSIONAL ENGINEER

Thomas W. Stephenson
10/9/07

NO.	REVISION	BY	DATE

CP&Y Chiang, Patel & Yerby, Inc.

BEXAR COUNTY
PUBLIC WORKS DIVISION

F.M. 2696 (BLANCO ROAD)

INTERIOR BENT NO. 2
PANTHER SPRINGS CREEK BRIDGE
STRUCTURE NO. 9
PHASE II

Designed: GLL	STATE	BEXAR COUNTY FILE NUMBER	PLAN SET NO. 034
Checked: TWS	TEXAS		
Drawn: LVM	COUNTY		OF
Checked: GLL	BEXAR	2708-01-022, ETC.	842

pw:/Active Projects/BEX6102/8.00 Plans and Drawings/8.10 Cut Sheets/8.1.02 Bridge/111 Structure No. 9/6102CABRBB12.999
10/9/2007 3:30:08 PM

TABLE OF CONSTANT QUANTITIES				
BAR	NO.	SIZE	LENGTH	WEIGHT
A	5	#11	37'-2"	987
B	5	#11	37'-2"	987
D	2	1 1/4"Ø	1'-8"	14
S	40	#5	11'-0"	459
T	4	#5	37'-2"	155
RE INFORCING STEEL			LB	2,602
CLASS "C" CONCRETE (CAP)			CY	11.6

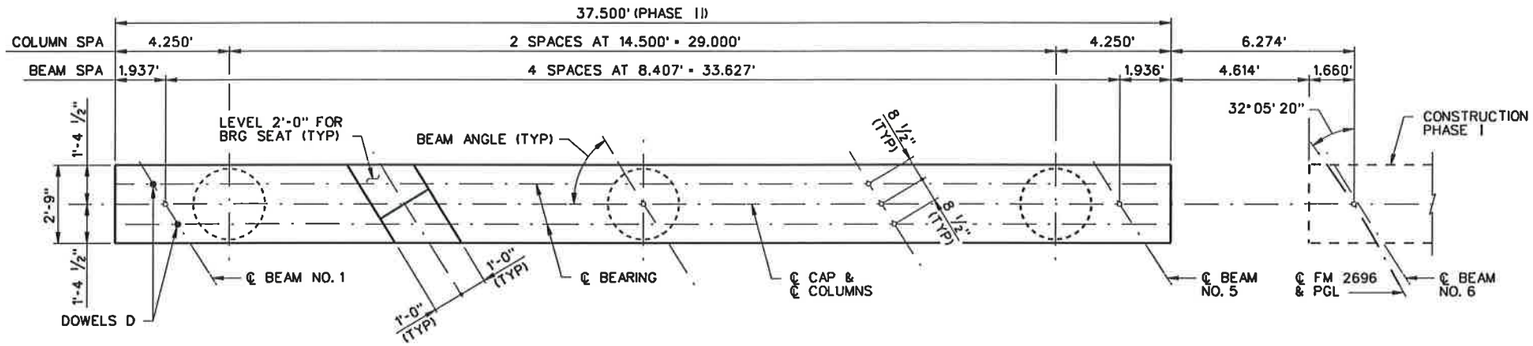

PLAN

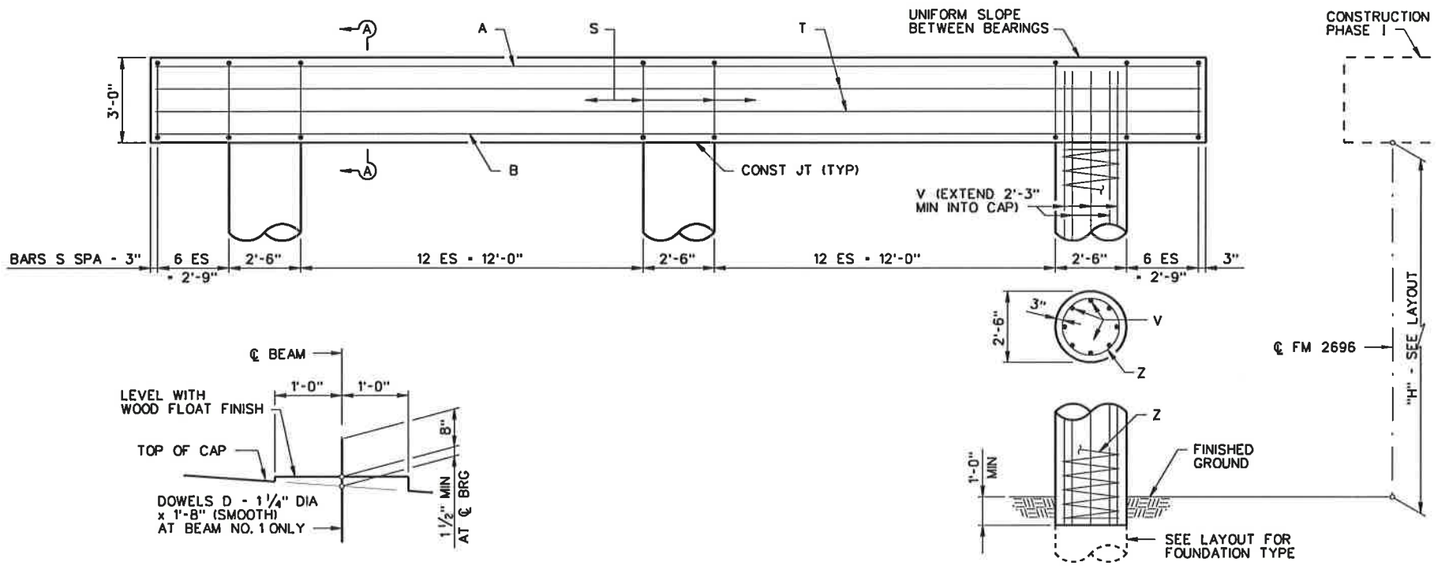

ELEVATION

BEARING SEAT DETAIL

(BEARING SURFACE TO BE CLEAN AND FREE OF ALL LOOSE MATERIAL BEFORE PLACING BEARING PAD.)

① TABLE OF COLUMN QUANTITIES						② TOTAL ESTIMATED QUANTITIES	
"H"	CLASS "C" CONCRETE (COL)	BARS V 24 - #9		BARS Z 3 - #3 SPIRAL		RE INF STEEL	CLASS "C" CONCRETE
HEIGHT	CY	LENGTH	WEIGHT	LENGTH	WEIGHT	LB	CY
6'	3.3	8'-3"	673	88'-2"	99	3,374	14.9

① ADJUST BARS V LENGTH BY 1 FT AND BARS Z LENGTH BY 12.606' FOR EACH LINEAR FOOT OF VARIATION IN THE "H" VALUE.

② ADJUST REINFORCING STEEL TOTAL BY 96 LB AND CLASS "C" CONC TOTAL BY 0.545 CY FOR EACH LINEAR FOOT OF VARIATION IN THE "H" VALUE.

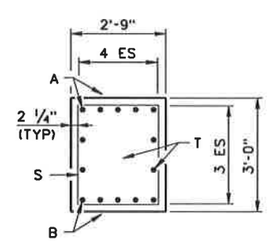

SECTION A-A

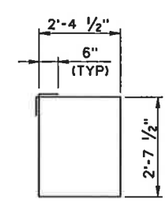

BARS S

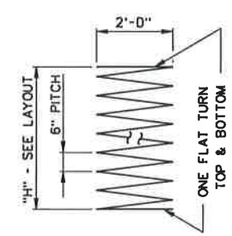

BARS Z

GENERAL NOTES:

1. DESIGNED ACCORDING TO 2007 AASHTO LRFD STANDARD SPECIFICATIONS (HL93 LOADING).
2. CONCRETE STRENGTH f'c = 3,600 psi.
3. ALL CAP REINFORCING TO BE GRADE 60.
4. SEE BRIDGE LAYOUT FOR FOUNDATION TYPE, SIZE AND LENGTH.
5. SEE FOUNDATION DETAIL STANDARD, FD, FOR ALL FOUNDATION DETAILS AND NOTES.
6. SEE BEAM LAYOUT FOR BEAM ANGLES.
7. CALCULATED FOUNDATION LOADS: 112 TONS/DRILLED SHAFT.

STATE OF TEXAS
THOMAS W. STEPHENSON
91178
LICENSED
PROFESSIONAL ENGINEER

Thomas W. Stephenson
10/9/07

NO.	REVISION	BY	DATE

CP&Y Chiang, Patel & Yerby, Inc.

BEXAR COUNTY PUBLIC WORKS DIVISION

F.M. 2696 (BLANCO ROAD)

INTERIOR BENT NO. 3
PANTHER SPRINGS CREEK BRIDGE
STRUCTURE NO. 9
PHASE II

Designed: GLL	STATE	BEXAR COUNTY FILE NUMBER	PLAN SET NO.
Checked: TWS	TEXAS		635
Drawn: LVM	COUNTY		OF
Checked: GLL	BEXAR	2708-01-022, ETC	842

pw:/Active Projects/BEX6102/8.00 Plans and Drawings/8.10 Cut Sheets/8.102 Bridge/10 Structure No. 9/6102CABRBB14.999
10/9/2007 3:30:28 PM

TABLE OF CONSTANT QUANTITIES

BAR	NO.	SIZE	LENGTH	WEIGHT
A	5	#11	37'- 2"	987
B	5	#11	37'- 2"	987
D	2	1¼"Ø	1'- 8"	14
S	40	#5	11'- 0"	459
T	4	#5	37'- 2"	155
RE INFORCING STEEL			LB	2,602
CLASS "C" CONCRETE (CAP)			CY	11.6

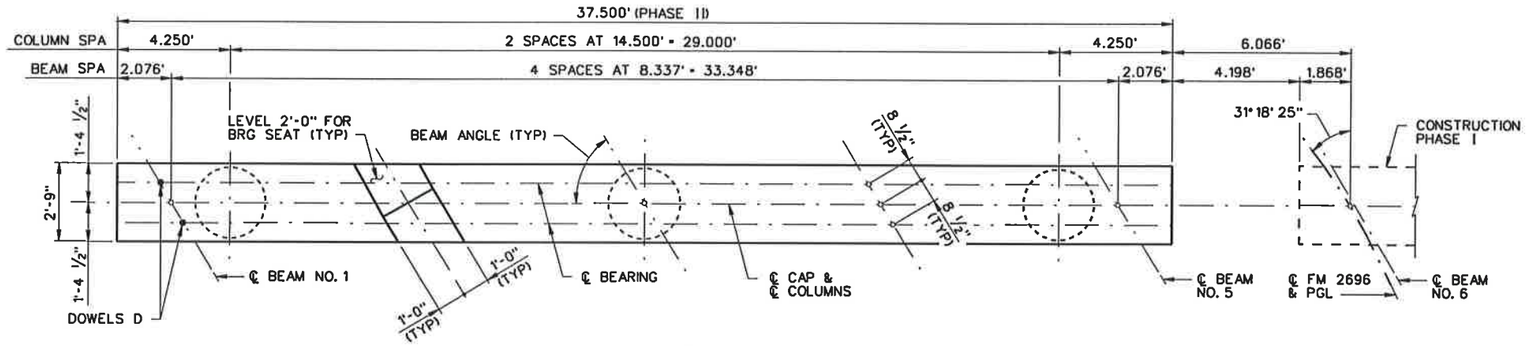

PLAN

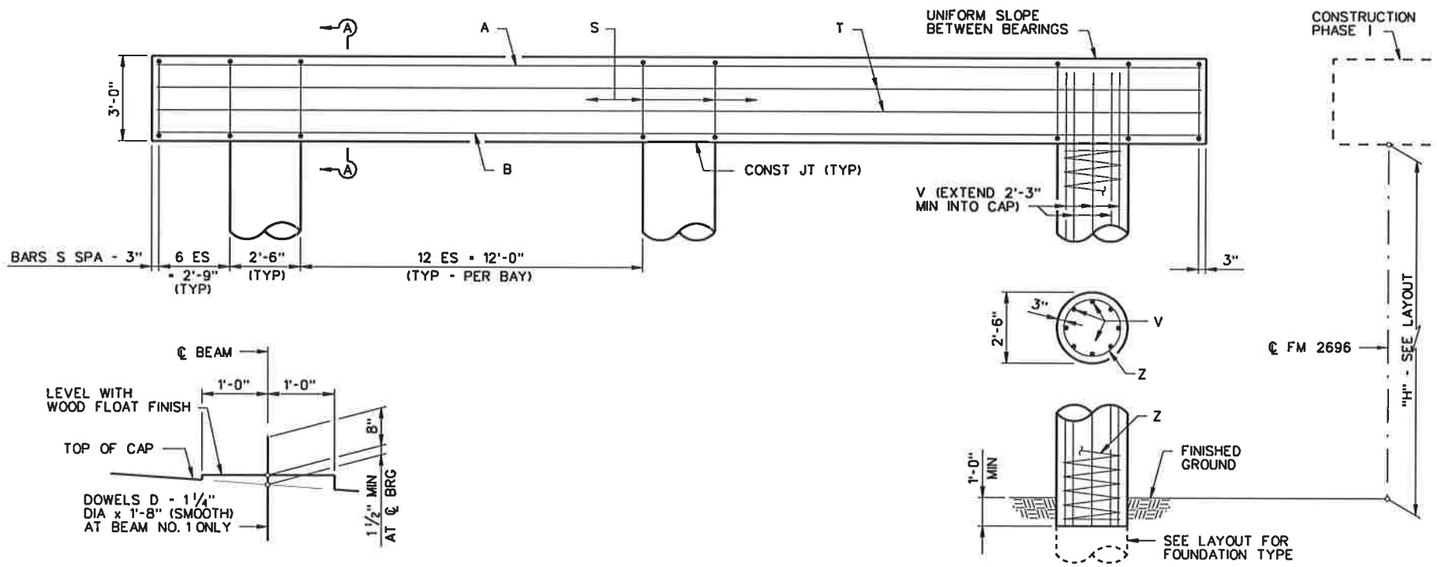

BEARING SEAT DETAIL

(BEARING SURFACE TO BE CLEAN AND FREE OF ALL LOOSE MATERIAL BEFORE PLACING BEARING PAD.)

ELEVATION

GENERAL NOTES:

1. DESIGNED ACCORDING TO 2007 AASHTO LRFD STANDARD SPECIFICATIONS (HL93 LOADING).
2. CONCRETE STRENGTH f'c = 3,600 psi.
3. ALL CAP REINFORCING TO BE GRADE 60.
4. SEE BRIDGE LAYOUT FOR FOUNDATION TYPE, SIZE AND LENGTH.
5. SEE FOUNDATION DETAIL STANDARD, FD, FOR ALL FOUNDATION DETAILS AND NOTES.
6. SEE BEAM LAYOUT FOR BEAM ANGLES.
7. CALCULATED FOUNDATION LOADS: 112 TONS/DRILLED SHAFT.

① TABLE OF COLUMN QUANTITIES						② TOTAL ESTIMATED QUANTITIES	
"H"	CLASS "C" CONCRETE (COL)	BARS V 24 - #9		BARS Z 3 - #3 SPIRAL		RE INF STEEL	CLASS "C" CONCRETE
HEIGHT	CY	LENGTH	WEIGHT	LENGTH	WEIGHT	LB	CY
7'	3.8	9'-3"	755	100'-10"	114	3,471	15.4

① ADJUST BARS V LENGTH BY 1 FT AND BARS Z LENGTH BY 12.606' FOR EACH LINEAR FOOT OF VARIATION IN THE "H" VALUE.

② ADJUST REINFORCING STEEL TOTAL BY 96 LB AND CLASS "C" CONC TOTAL BY 0.545 CY FOR EACH LINEAR FOOT OF VARIATION IN THE "H" VALUE.

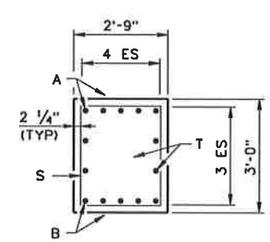

SECTION A-A

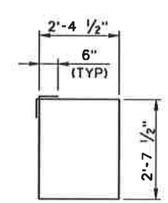

BARS S

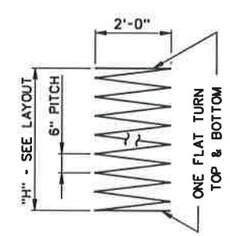

BARS Z

STATE OF TEXAS
THOMAS W. STEPHENSON
91178
LICENSED
PROFESSIONAL ENGINEER

Thomas W. Stephenson
10/9/07

NO.	REVISION	BY	DATE

CP&Y Chiang, Patel & Yerby, Inc.

BEXAR COUNTY PUBLIC WORKS DIVISION

F.M. 2696 (BLANCO ROAD)

INTERIOR BENT NO. 4
PANTHER SPRINGS CREEK BRIDGE
STRUCTURE NO. 9
PHASE II

Designed: GLL	STATE	BEXAR COUNTY FILE NUMBER	PLAN SET NO. 636
Checked: TWS	TEXAS		OF
Drawn: LVM	COUNTY		842
Checked: GLL	BEXAR	2708-01-022, ETC	

pw:/Active Projects/BEX6102/8.00 Plans and Drawings/8.10 Cut Sheets/8.1.02 Bridge/19 Structure No. 9/6102C4BRB16.999
10/9/2007 3:30:46 PM

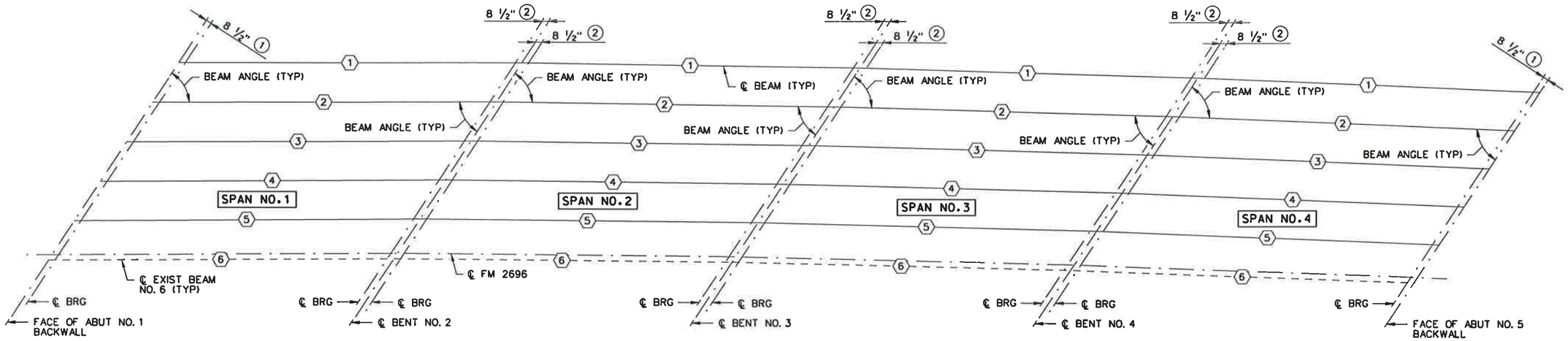

BEAM LAYOUT

⬡ DENOTES BEAM NUMBER.

① MEASURED PERPENDICULAR TO ABUTMENT BACKWALL.

② MEASURED ALONG ℄ BEAM.

③ BEAM LENGTHS SHOWN ARE BOTTOM BEAM FLANGE LENGTHS WITH ADJUSTMENTS MADE FOR BEAM SLOPE.

BENT REPORT

BENT NO. 1 (N 57 1 6.00 W)
DISTANCE BETWEEN STATION LINE AND BEAM 1 42.579 L

		BEAM SPAC. (C.L. BENT)	BEAM ANGLE D M S
SPAN 1	BEAM 1	.000	57 1 39
	BEAM 2	8.556	56 58 4
	BEAM 3	8.556	56 54 30
	BEAM 4	8.556	56 50 56
	BEAM 5	8.556	56 47 23
	TOTAL	34.224	

BENT NO. 2 (N 57 1 6.00 W)
DISTANCE BETWEEN STATION LINE AND BEAM 1 42.198 L

		BEAM SPAC. (C.L. BENT)	BEAM ANGLE D M S
SPAN 1	BEAM 1	.000	57 1 39
	BEAM 2	8.479	56 58 4
	BEAM 3	8.479	56 54 30
	BEAM 4	8.479	56 50 56
	BEAM 5	8.479	56 47 23
	TOTAL	33.917	
SPAN 2	BEAM 1	.000	57 48 25
	BEAM 2	8.479	57 44 57
	BEAM 3	8.479	57 41 29
	BEAM 4	8.479	57 38 2
	BEAM 5	8.479	57 34 34
	TOTAL	33.917	

BENT NO. 3 (N 57 1 6.00 W)
DISTANCE BETWEEN STATION LINE AND BEAM 1 41.837 L

		BEAM SPAC. (C.L. BENT)	BEAM ANGLE D M S
SPAN 2	BEAM 1	.000	57 48 25
	BEAM 2	8.407	57 44 57
	BEAM 3	8.407	57 41 29
	BEAM 4	8.407	57 38 2
	BEAM 5	8.407	57 34 34
	TOTAL	33.627	
SPAN 3	BEAM 1	.000	58 34 49
	BEAM 2	8.407	58 31 27
	BEAM 3	8.407	58 28 6
	BEAM 4	8.407	58 24 44
	BEAM 5	8.407	58 21 23
	TOTAL	33.627	

BENT NO. 4 (N 57 1 6.00 W)
DISTANCE BETWEEN STATION LINE AND BEAM 1 41.489 L

		BEAM SPAC. (C.L. BENT)	BEAM ANGLE D M S
SPAN 3	BEAM 1	.000	58 34 49
	BEAM 2	8.337	58 31 27
	BEAM 3	8.337	58 28 6
	BEAM 4	8.337	58 24 44
	BEAM 5	8.337	58 21 23
	TOTAL	33.348	
SPAN 4	BEAM 1	.000	59 21 37
	BEAM 2	8.337	59 18 21
	BEAM 3	8.337	59 15 5
	BEAM 4	8.337	59 11 50
	BEAM 5	8.337	59 8 35
	TOTAL	33.348	

BENT NO. 5 (N 57 1 6.00 W)
DISTANCE BETWEEN STATION LINE AND BEAM 1 41.150 L

		BEAM SPAC. (C.L. BENT)	BEAM ANGLE D M S
SPAN 4	BEAM 1	.000	59 21 37
	BEAM 2	8.269	59 18 21
	BEAM 3	8.269	59 15 5
	BEAM 4	8.269	59 11 50
	BEAM 5	8.269	59 8 35
	TOTAL	33.075	

BEAM REPORT

BEAM REPORT. SPAN 1

	HORIZONTAL DISTANCE C-C BENT	C-C BRG.	TRUE DISTANCE BOT. BM. FLG.③	BEAM SLOPE
BEAM 1	61.791	60.238	61.43	.00148
BEAM 2	61.833	60.280	61.47	.00155
BEAM 3	61.875	60.321	61.51	.00163
BEAM 4	61.917	60.362	61.55	.00170
BEAM 5	61.958	60.404	61.59	.00178

BEAM REPORT. SPAN 2

	HORIZONTAL DISTANCE C-C BENT	C-C BRG.	TRUE DISTANCE BOT. BM. FLG.③	BEAM SLOPE
BEAM 1	60.806	59.390	60.47	.00051
BEAM 2	60.845	59.428	60.51	.00059
BEAM 3	60.884	59.467	60.55	.00066
BEAM 4	60.923	59.506	60.59	.00073
BEAM 5	60.962	59.545	60.63	.00080

BEAM REPORT. SPAN 3

	HORIZONTAL DISTANCE C-C BENT	C-C BRG.	TRUE DISTANCE BOT. BM. FLG.③	BEAM SLOPE
BEAM 1	60.818	59.401	60.48	-.00045
BEAM 2	60.854	59.438	60.52	-.00038
BEAM 3	60.891	59.474	60.56	-.00031
BEAM 4	60.927	59.511	60.59	-.00024
BEAM 5	60.964	59.547	60.63	-.00017

BEAM REPORT. SPAN 4

	HORIZONTAL DISTANCE C-C BENT	C-C BRG.	TRUE DISTANCE BOT. BM. FLG.③	BEAM SLOPE
BEAM 1	61.826	60.294	61.47	-.00141
BEAM 2	61.861	60.329	61.50	-.00135
BEAM 3	61.895	60.363	61.53	-.00128
BEAM 4	61.930	60.397	61.57	-.00122
BEAM 5	61.965	60.432	61.60	-.00115

STATE OF TEXAS
THOMAS W. STEPHENSON
91178
LICENSED
PROFESSIONAL ENGINEER

Thomas W. Stephenson
10/9/07

NO.	REVISION	BY	DATE

CP&Y Chiang, Patel & Yerby, Inc.

BEXAR COUNTY
PUBLIC WORKS DIVISION

F.M. 2696 (BLANCO ROAD)

BEAM LAYOUT
PANTHER SPRINGS CREEK BRIDGE
STRUCTURE NO. 9
PHASE II

Designed: GLL	STATE	BEXAR COUNTY FILE NUMBER	PLAN SET NO. 637
Checked: TWS	TEXAS		
Drawn: MC	COUNTY		OF
Checked: GLL	BEXAR	2708-01-022, ETC.	842

pw:/Active Projects/BEX6102/8.00 Plans and Drawings/8.10 Cut Sheets/8.102 Bridge/19 Structure No. 9/6102CABRB12.999
10/9/2007 3:29:02 PM

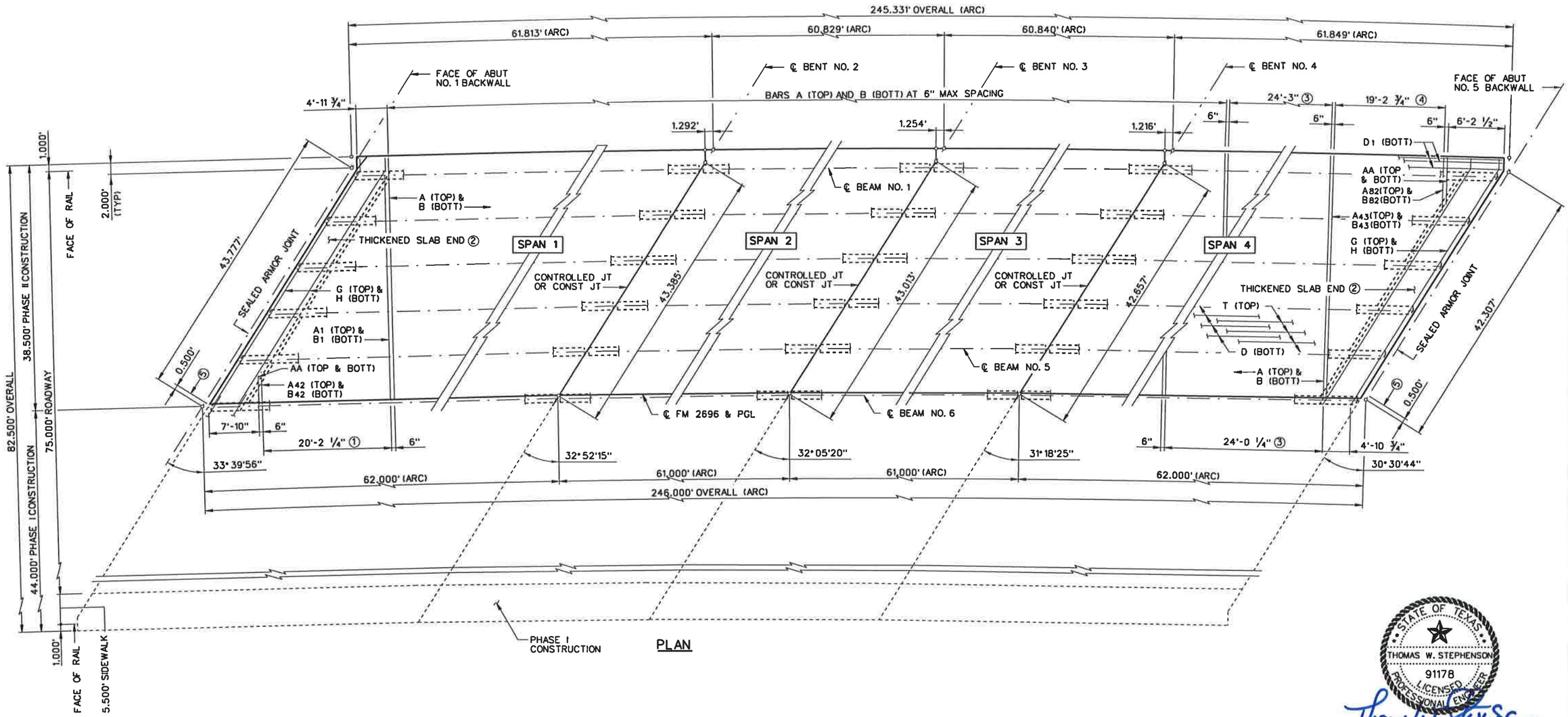

PLAN

TABLE OF ESTIMATED QUANTITIES				
SPAN	REINF CONCRETE SLAB	PRESTR CONCRETE BEAMS (TY B)⑤	CLASS "S" CONCRETE	REINF STEEL ⑥
NO.	SF	LF	CY	LB
1	2,383	307.55	58.8	15,490
2	2,344	302.75	57.9	15,236
3	2,345	302.78	57.9	15,243
4	2,383	307.67	58.8	15,490
TOTAL	9,455	1,220.75	233.4	61,459

⑤ BEAM LENGTHS SHOWN ARE BOTTOM BEAM FLANGE LENGTHS WITH ADJUSTMENTS MADE FOR BEAM SLOPE. SEE BEAM LAYOUT FOR BEAM LENGTHS.

⑥ REINFORCING STEEL WEIGHT IS CALCULATED USING AN APPROXIMATE FACTOR OF 6.5 LBS/SF.

GENERAL NOTES:

1. DESIGNED ACCORDING TO 2007 AASHTO LRFD STANDARD SPECIFICATIONS (HL93 LOADING).
2. CONCRETE STRENGTH f'c = 4,000 psi.
3. ALL REINFORCING TO BE GRADE 60.
4. SEE MISC SLAB DETAILS SHEET FOR ADDITIONAL INFORMATION.
5. SEE IBTS STANDARD FOR THICKENED SLAB END DETAILS.
6. SEE IBMS STANDARD FOR MISCELLANEOUS SLAB DETAILS.
7. SEE PCP OR PMDF STANDARDS FOR DETAILS AND QUANTITY ADJUSTMENTS IF EITHER OF THESE OPTIONS IS USED.
8. BAR LAPS, WHERE REQUIRED, WILL BE AS FOLLOWS: #4 = 1'-5" #5 = 1'-9"

① BARS A_{1-42} (TOP) AND BARS B_{1-42} (BOTT) AT 6" MAX SPACING.
② THICKENED SLAB END - SEE IBTS FOR BARS G, H, J AND M.
③ BARS A (TOP) AND BARS B (BOTT) AT 6" MAX SPACING.
④ BARS A_{43-82} (TOP) AND BARS B_{43-82} (BOTT) AT 6" MAX SPACING.
⑤ END OF ARMOR PLATE (PHASE II).

STATE OF TEXAS
THOMAS W. STEPHENSON
91178
LICENSED
PROFESSIONAL ENGINEER

Thomas W. Stephenson
10/9/07

NO.	REVISION	BY	DATE

CP&Y Chiang, Patel & Yerby, Inc.

BEXAR COUNTY PUBLIC WORKS DIVISION

F.M. 2696 (BLANCO ROAD)

246.00' PRESTR CONC BM UNIT
PANTHER SPRINGS CREEK BRIDGE
STRUCTURE NO. 9
PHASE II

SHEET 1 OF 2

Designed: GLL	STATE	BEXAR COUNTY FILE NUMBER	PLAN SET NO.
Checked: TWS	TEXAS		638
Drawn: MCB	COUNTY		OF
Checked: GLL	BEXAR	2708-01-022, ETC.	892

pw:/Active Projects/BEX6102/8.00 Plans and Drawings/8.10 Cut Sheets/8.102 Bridge/(1) Structure No. 9/6102CABRBS13.999
10/9/2007 3:29:40 PM

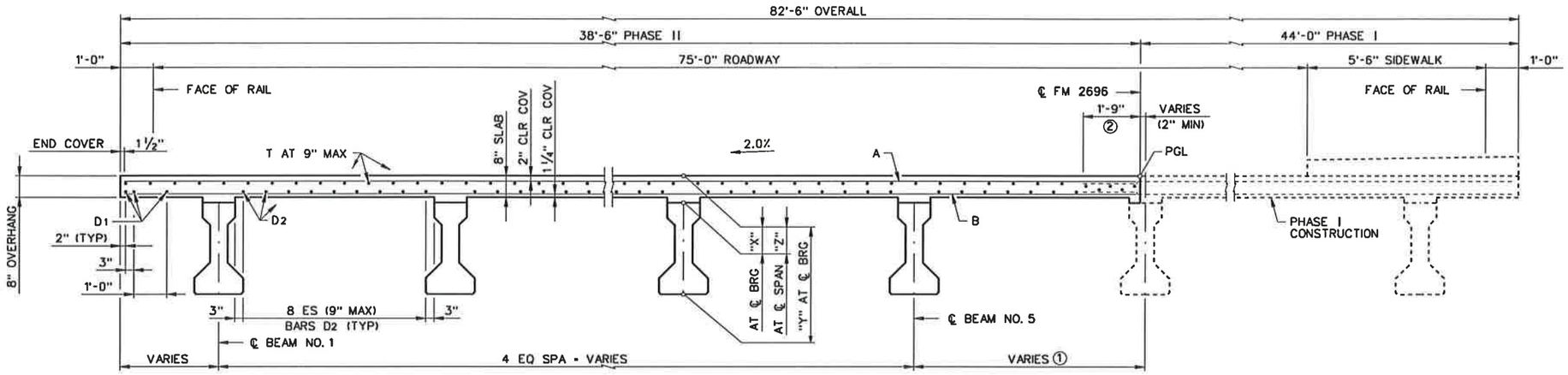

TYPICAL TRANSVERSE SECTION

(SHOWING SLAB)

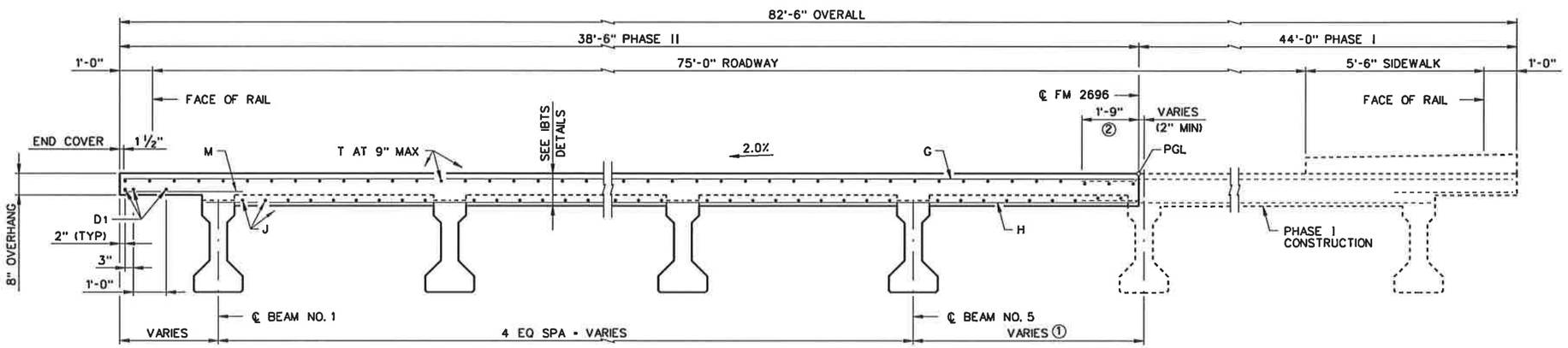

TYPICAL TRANSVERSE SECTION

(SHOWING THICKENED SLAB END)

① THE USE OF PRESTRESSED CONCRETE PANELS WILL NOT BE PERMITTED IN THIS BAY.

② MIN 1'-9" LAP WITH PHASE I REINFORCING.

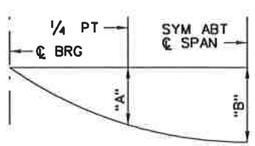

NOTE: DEFLECTIONS SHOWN ARE DUE TO SLAB CONCRETE ONLY. (Ec = 5 x 10^6 PSI). CALCULATED DEFLECTIONS SHOWN ARE THEORETICAL AND ACTUAL DIMENSIONS MAY BE LESS. DEFLECTIONS TO BE ADJUSTED BASED ON FIELD OBSERVATION.

SPAN NO.	BEAM NO.	"A" FT	"B" FT
1 & 4	1	0.059	0.083
1 & 4	2-5	0.064	0.090
2 & 3	1	0.055	0.077
2 & 3	2-5	0.060	0.084

DEAD LOAD DEFLECTION DIAGRAM

TABLE OF SECTION DEPTHS

SPAN NO.	BEAM NO.	"X" AT ℄ BRG	"Y" AT ℄ BRG	"Z" AT ℄ SPAN ③
1 & 4	1	10 3/4"	3'-8 3/4"	8 3/4"
1 & 4	2-5	10 3/4"	3'-8 3/4"	9"
2 & 3	ALL	10 3/4"	3'-8 3/4"	9"

③ THEORETICAL DIMENSION

BAR TABLE

BAR	SIZE
A	#5
B	#5
D	#5
G	#5
H	#5
J	#5
K	#5
M	#5
T	#4

STATE OF TEXAS
THOMAS W. STEPHENSON
91178
LICENSED
PROFESSIONAL ENGINEER

Thomas W. Stephenson
10/9/07

NO.	REVISION	BY	DATE

CP&Y Chiang, Patel & Yerby, Inc.

BEXAR COUNTY
PUBLIC WORKS DIVISION

F.M. 2696 (BLANCO ROAD)

246.00' PRESTR CONC BM UNIT
PANTHER SPRINGS CREEK BRIDGE
STRUCTURE NO. 9
PHASE II

SHEET 2 OF 2

Designed: GLL	STATE	BEXAR COUNTY FILE NUMBER	PLAN SET NO. 639
Checked: TWS	TEXAS		OF
Drawn: LVM	COUNTY		842
Checked: GLL	BEXAR	2708-01-022, ETC.	

pw:/Active Projects/BEX6102/8.00 Plans and Drawings/8.10 Cut Sheets/8.1.02 Bridge/(1) Structure No. 9/6102CABRBS14.999
10/9/2007 3:28:49 PM

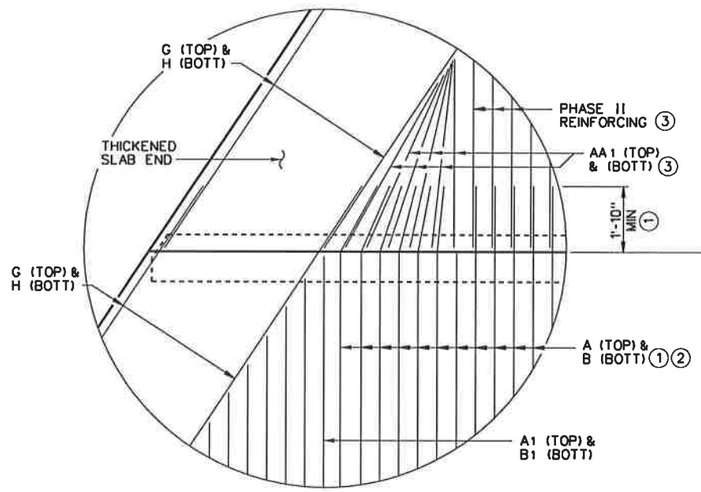

CORNER DETAIL AT CONSTRUCTION JOINT
(SHOWING SPAN 1)

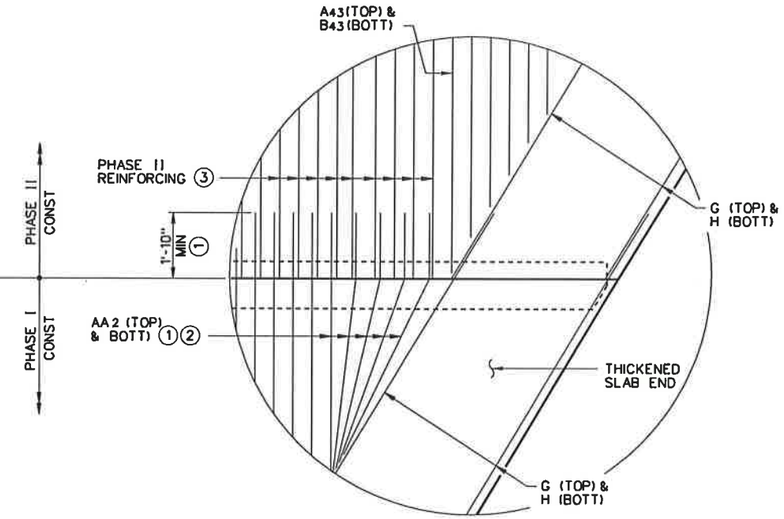

CORNER DETAIL AT CONSTRUCTION JOINT
(SHOWING SPAN 4)

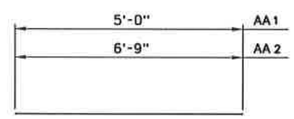

BARS AA

(1) EXTEND BARS A, B, AA2, G & H 1'-10" MIN INTO PHASE II CONSTRUCTION.

(2) FIELD BEND AS NECESSARY TO SPLICE WITH PHASE II REINFORCING.

(3) ADJUST SPACING AS NECESSARY TO MATCH PHASE I REINFORCING.

GENERAL NOTES:

1. SEE IBTS STANDARD FOR BARS G, H AND ADDITIONAL INFORMATION.
2. BARS D & T NOT SHOWN FOR CLARITY.

STATE OF TEXAS
THOMAS W. STEPHENSON
91178
LICENSED
PROFESSIONAL ENGINEER

Thomas W. Stephenson
10/9/07

NO.	REVISION	BY	DATE

CP&Y Chiang, Patel & Yerby, Inc.

BEXAR COUNTY
PUBLIC WORKS DIVISION

F.M. 2696 (BLANCO ROAD)

MISC SLAB DETAILS
PANTHER SPRINGS CREEK BRIDGE
STRUCTURE NO. 9

Designed: GLL	STATE	BEXAR COUNTY FILE NUMBER	PLAN SET NO.
Checked: TWS	TEXAS		640
Drawn: MCB	COUNTY		OF
Checked: GLL	BEXAR	2708-01-022, ETC.	842

pw:/Active Projects/BEX6102/8.00 Plans and Drawings/8.10 Cut Sheets/8.1.02 Bridge/11 Structure No. 9/6102CABRB515.999
10/9/2007 3:29:10 PM

DISCLAIMER:
The use of this standard is governed by the "Texas Engineering Practice Act". No warranty of any kind is made by TxDOT for any purpose whatsoever. TxDOT assumes no responsibility for the conversion of this standard to other formats or for incorrect results or damages resulting from its use.

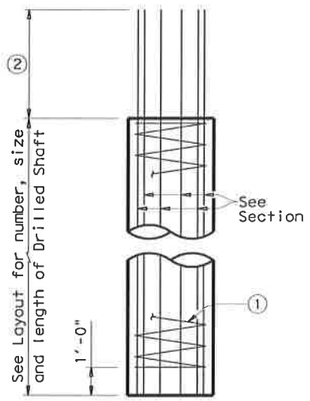

ABUTMENTS, WINGWALLS AND MULTI-DRILLED SHAFT FOOTINGS

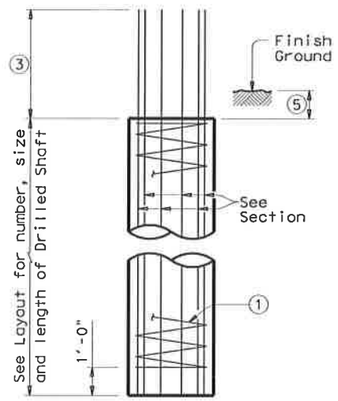

INTERIOR BENTS DRILLED SHAFT DIA EQUAL TO COLUMN DIA

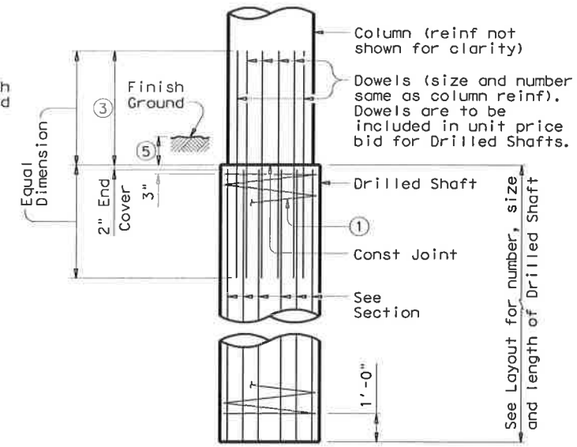

INTERIOR BENTS DRILLED SHAFT DIA GREATER THAN COLUMN DIA

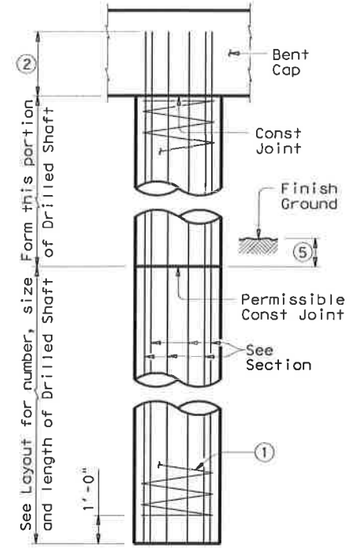

OPTIONAL INTERIOR BENT DRILLED SHAFT DETAIL④

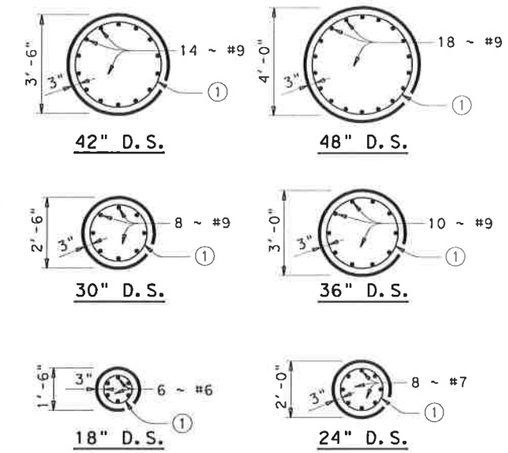

DRILLED SHAFT SECTIONS

DRILLED SHAFT DETAILS

① #3 Spiral at 6" pitch (One flat turn top & bottom)

② Min extension into supported element:
#6 Bars = 1'-0"
#7 Bars = 1'-5"
#9 Bars = 2'-3"

③ Min lap with Column reinf:
#7 Bars = 2'-4"
#9 Bars = 3'-10"

④ If approved by the Engineer, Drilled Shafts may extend to bottom of bent caps for "H" heights of 6 ft or less (as shown on Bridge Layout). This option can only be used when Drilled Shaft Dia equals Column Dia. The forming method shall be submitted for approval prior to construction. No adjustments in payment will be made if this option is used.

⑤ 6" Min at Grade Crossing, 1'-0" Min in Channel.

⑥ Or as shown on plans.

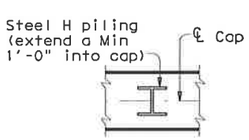

ORIENTATION OF STEEL H PILING

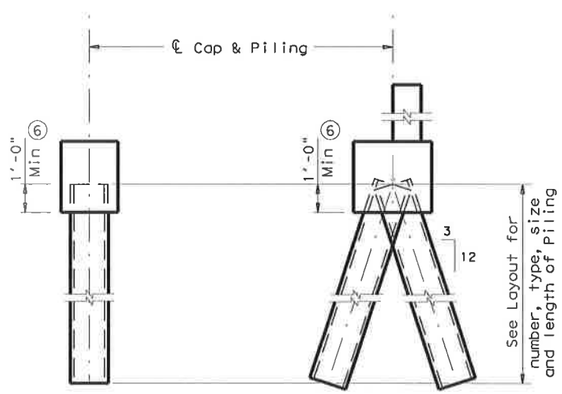

VERTICAL PILE BATTERED PILE

PILING DETAILS
(Concrete or Steel H)

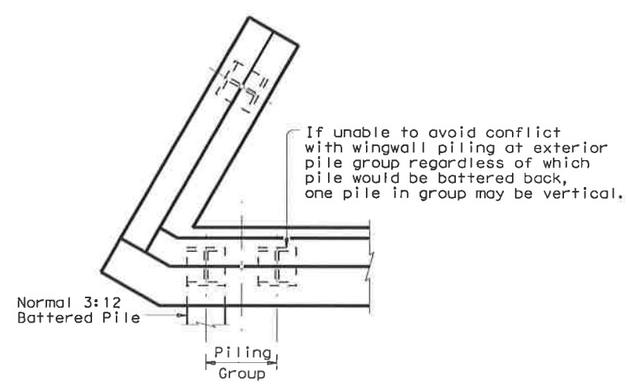

DETAIL "A"
(Showing Plan View of a 30° Skewed Abutment)

SHEET 1 OF 2

Texas Department of Transportation
Bridge Division

COMMON FOUNDATION DETAILS

FD

FILE: fdstde01.dgn	DN: TxDOT	CK: TxDOT	DW: TxDOT	CK: TxDOT	
© TxDOT April 2006	DISTRICT	FEDERAL AID PROJECT			SHEET
REVISIONS	SAT				64
	COUNTY		CONTROL	SECT	JOB	HIGHWAY
	BEXAR		2708	01	022	FM2696

ACC:
LEVELS

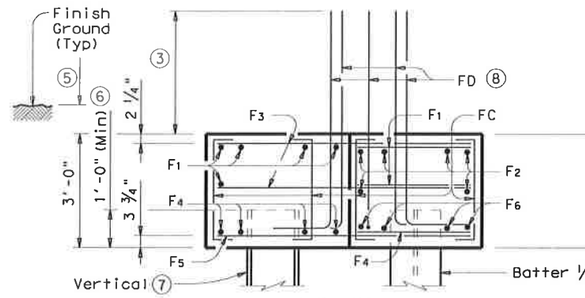

ELEVATION

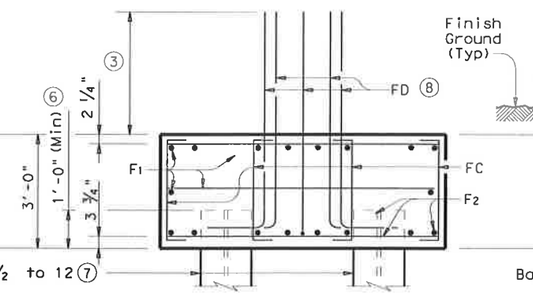

ELEVATION

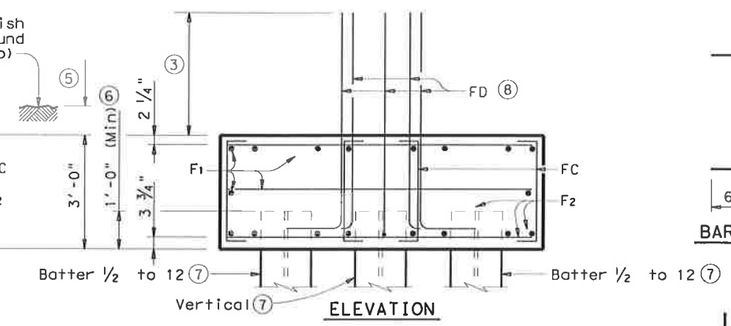

ELEVATION

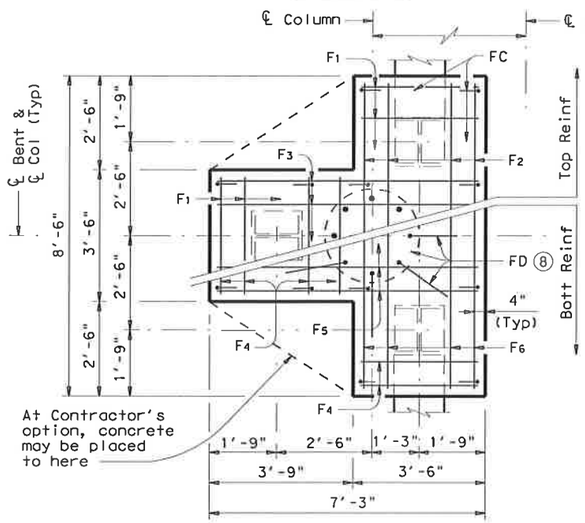

PLAN

THREE PILE FOOTING

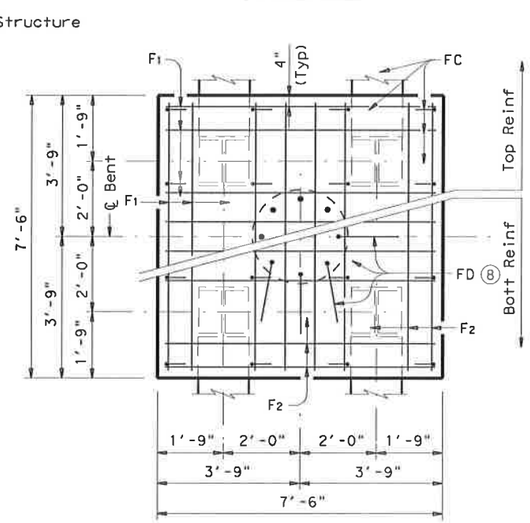

PLAN

FOUR PILE FOOTING

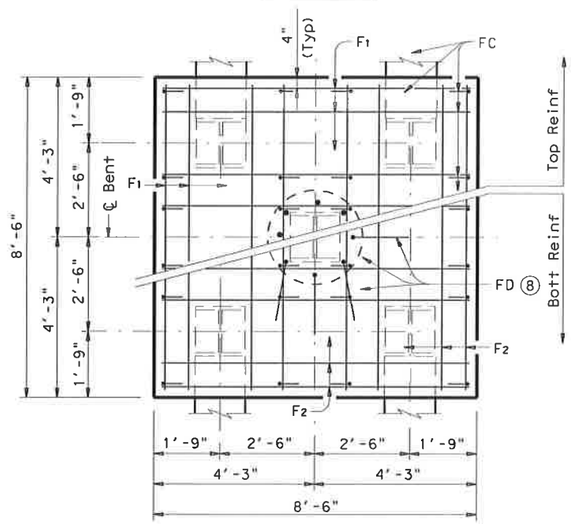

PLAN

FIVE PILE FOOTING

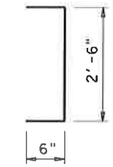

BARS FC

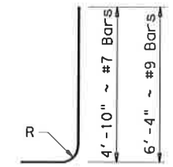

1'-2"	#7 Bars
1'-7"	#9 Bars

BARS FD ⑧

R = 3 1/4" ~ #7 Bars and 5 1/4" ~ #9 Bars

TABLE OF FOOTING QUANTITIES FOR 30" COLUMNS

ONE 3 PILE FOOTING				
Bar	No.	Size	Length	Weight
F_1	11	#4	3'- 2"	23
F_2	6	#4	8'- 2"	33
F_3	6	#4	6'- 11"	28
F_4	8	#9	3'- 2"	86
F_5	4	#9	6'- 11"	94
F_6	4	#9	8'- 2"	111
FC	12	#4	3'- 6"	28
FD ⑨	8	#9	7'- 11"	215
Reinforcing Steel			Lb	618
Class "C" Concrete			CY	4.8

ONE 4 PILE FOOTING				
Bar	No.	Size	Length	Weight
F_1	20	#4	7'- 2"	96
F_2	16	#8	7'- 2"	306
FC	16	#4	3'- 6"	37
FD ⑨	8	#9	7'- 11"	215
Reinforcing Steel			Lb	654
Class "C" Concrete			CY	6.3

ONE 5 PILE FOOTING				
Bar	No.	Size	Length	Weight
F_1	20	#4	8'- 2"	109
F_2	16	#9	8'- 2"	444
FC	24	#4	3'- 6"	56
FD ⑨	8	#9	7'- 11"	215
Reinforcing Steel			Lb	824
Class "C" Concrete			CY	8.0

③ Min lap with Column reinf:
#7 Bars = 2'-4"
#9 Bars = 3'-10"

⑤ 6" Min at Grade Crossing, 1'-0" Min in Channel.

⑥ Or as shown on plans.

⑦ See Layout for Type, Size and length of Piling.

⑧ Number and size of FD bars must match Column reinforcing. FD bars shall be tied to the top of the bottom mat of reinforcing

⑨ For 24" Columns, use #7 FD bars (6'-0") in place of #9 bars and deduct 116 lbs. For 36" Columns, add 2 FD bars (54 lbs).

GENERAL NOTES:

Designed according to AASHTO LRFD Specifications.

See Bridge Layout of each Structure for Foundation Type to be used.

Drilled shaft details shown are not to be used for retaining wall, noise wall, barrier or sign foundation without structural evaluation.

Footings shown on this standard are not applicable for columns larger than 36" Diameter.

Details shown on this standard to be used unless shown otherwise in the plans.

Maximum Pile Load for the footings shown shall be as follows : 72 Tons/Pile with 24" Dia Column
80 Tons/Pile with 30" Dia Column
100 Tons/Pile with 36" Dia Column

The footings shown on this Standard are not to be used in direct contact with salt water or exposed to salt water spray.

Drilled Shaft reinforcing may be Grade 40.

Piling under abutment wings to be driven to a minimum resistance of 10 Tons.

DISCLAIMER:
The use of this standard is governed by the "Texas Engineering Practice Act". No warranty of any kind is made by TxDOT for any purpose whatsoever. TxDOT assumes no responsibility for the conversion of this standard to other formats or for incorrect results or damages resulting from its use.

ACC:

LEVELS 1 2 3 4

SHEET 2 OF 2

Texas Department of Transportation
Bridge Division

COMMON FOUNDATION DETAILS

FD

FILE: fdstde01.dgn	DN: TxDOT	CK: TxDOT	DW: TxDOT	CK: TxDOT
© TxDOT April 2006	DISTRICT	FEDERAL AID PROJECT		SHEET
REVISIONS	SAT			642
	COUNTY	CONTROL	SECT	JOB	HIGHWAY
	BEXAR	2708	01	022	FM2696

TABLE OF BARS R SPACING (7)			
BEAM TYPE	ZONE 1	ZONE 2	ZONE 3
A	16 Spa at 4" = 5'-4"	25 Spa at 6" = 12'-6"	12" Max Spa to Midspan
B	20 Spa at 4" = 6'-8"	24 Spa at 6" = 12'-0"	12" Max Spa to Midspan
C	18 Spa at 4" = 6'-0"	28 Spa at 8" = 18'-8"	15" Max Spa to Midspan
IV	23 Spa at 4" = 7'-8"	24 Spa at 8" = 16'-0"	15" Max Spa to Midspan
VI	21 Spa at 4" = 7'-0"	14 Spa at 8" = 9'-4"	12" Max Spa to Midspan

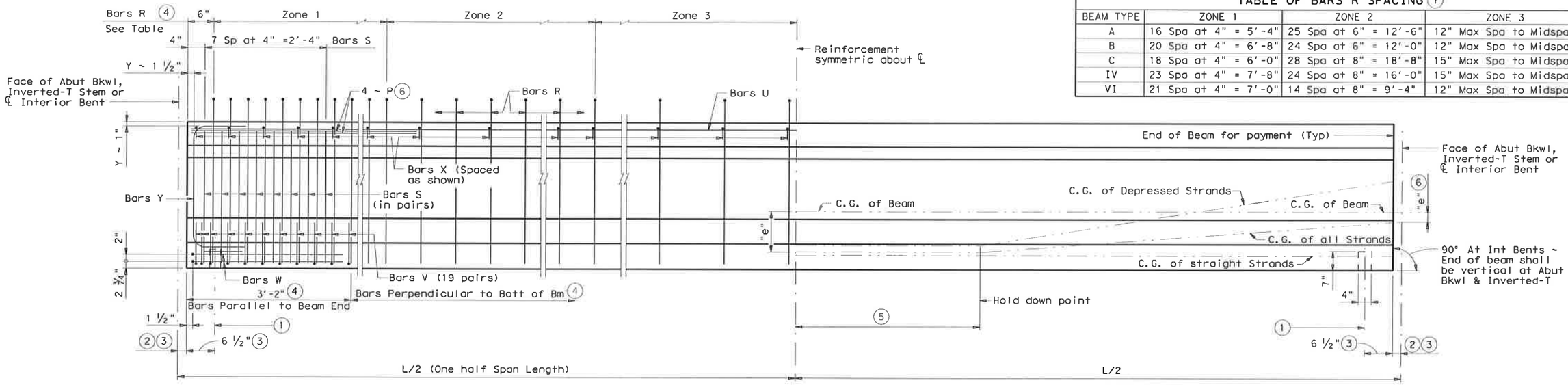

BEAM ELEVATION

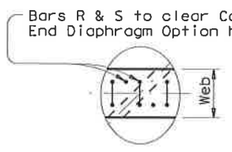

PLAN

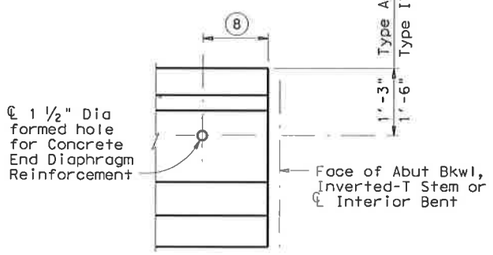

ELEVATION

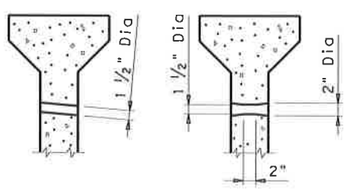

Form holes parallel to roadway slope if superelevation is greater than 0.03'/Ft for 1 ½" Dia holes or 0.06'/Ft for 2" Dia holes.

FORMED HOLE SECTIONS

CONCRETE END DIAPHRAGM OPTION HOLE

(Diaphragm holes for lifting purposes will not be permitted.) Only required when span details require End Diaphragms.

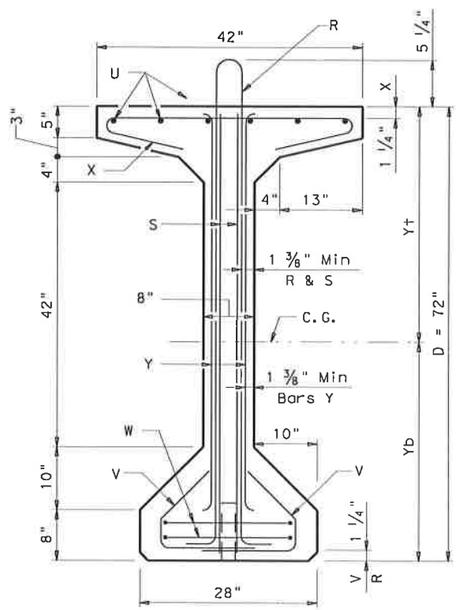

TYPE VI BEAM

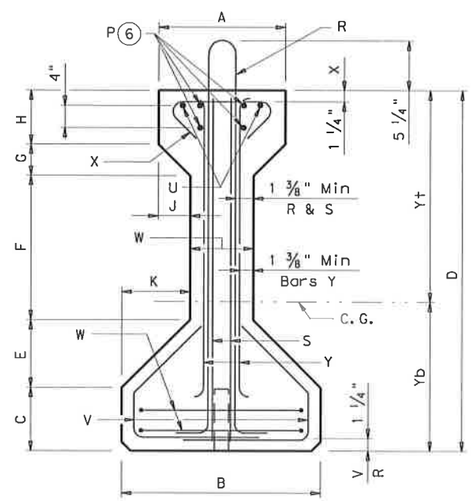

TYPES A, B, C & IV BEAMS

TABLE OF BEAM DIMENSIONS AND SECTION PROPERTIES																
BEAM TYPE	A in.	B in.	C in.	D in.	E in.	F in.	G in.	H in.	J in.	K in.	W in.	Yt in.	Yb in.	AREA in.²	I in.⁴	Weight plf
A	12	16	5	28	5	11	3	4	3	5	6	15.39	12.61	275.4	22,658	287
B	12	18	6	34	5 ¾	14	2 ¾	5 ½	2 ¾	5 ¾	6 ½	19.07	14.93	360.3	43,177	375
C	14	22	7	40	7 ½	16	3 ½	6	3 ½	7 ½	7	22.91	17.09	494.9	82,602	516
IV	20	26	8	54	9	23	6	8	6	9	8	29.25	24.75	788.4	260,403	821
VI	See section for beam dimensions											35.60	36.40	1,084.4	732,586	1,130

(1) ℄ 4" x 1 ½" Vertical Slotted Hole at Doweled Beam end [labeled (D) on Bridge Layout]. Required for Outside Beams only or as shown on substructure details. Anchorage holes may be tapered (4 ¾" x 1 ⅝") at base. If holes are formed with sheet metal, forms may be left in place.

(2) 3" ~ Inverted-T Stem, 2" ~ Abutment Bkwl and Interior Bents.

(3) Measured along ℄ Beam at Interior Bents; perpendicular to Abutment Bkwl or Inverted-T Stem.

(4) Spacing shown shall not be exceeded at either top or bottom of beam.

(5) 5'-0" Min or L/20 (- 0 ; + 2'-0") Max.

(6) Bars P (#6 x 10'-0") are only required for Type IV Beams when "e" at beam ends exceeds 14.0". At the fabricator's option, bars larger than #6 may be used. When L is less than 50 ft, Bars P are to be the same length as Bars U.

(7) Short beams may not include all of Zone 2 and none of Zone 3 reinforcing.

(8) [(1'-2 ½" ÷ Cos Skew Angle) - 2"] at Interior Bents.
[1'-0 ½" ÷ Cos Skew Angle] at Abutment Bents and Inverted-T Bents.
Measured along beam centerline. Skew Angle = 90° - Beam Angle.

GENERAL NOTES:

Designed in accordance with AASHTO LRFD Specifications.
All concrete shall be Class H.
Bottom corners of all beam flanges and outside corners of exterior beam ends shall be chamfered ¾" or rounded to a ¾" radius.
All reinforcing bars for beams shall be Grade 60.
An equal area of deformed Welded Wire Reinforcement (WWR) (ASTM A497) may be substituted for Bars R, V, S or X.
It is permissible for bars or strands to come in contact with materials used in forming anchor holes.

HL93 LOADING

Sheet 1 of 2

Texas Department of Transportation
Bridge Division

PRESTRESSED CONCRETE I-BEAM DETAILS

IBD

FILE: ibdstdel.dgn	DN: TxDOT	CK: TxDOT	DW: TxDOT	CK: TxDOT
© TxDOT January 2005	DISTRICT	FEDERAL AID PROJECT		SHEET
REVISIONS	SAT			643
	COUNTY	CONTROL	SECT	JOB	HIGHWAY
	BEXAR	2708	01	022	FM2696

DISCLAIMER:
The use of this standard is governed by the "Texas Engineering Practice Act". No warranty of any kind is made by TxDOT for any purpose whatsoever. TxDOT assumes no responsibility for the conversion of this standard to other formats or for incorrect results or damages resulting from its use.

ACC:

LEVELS

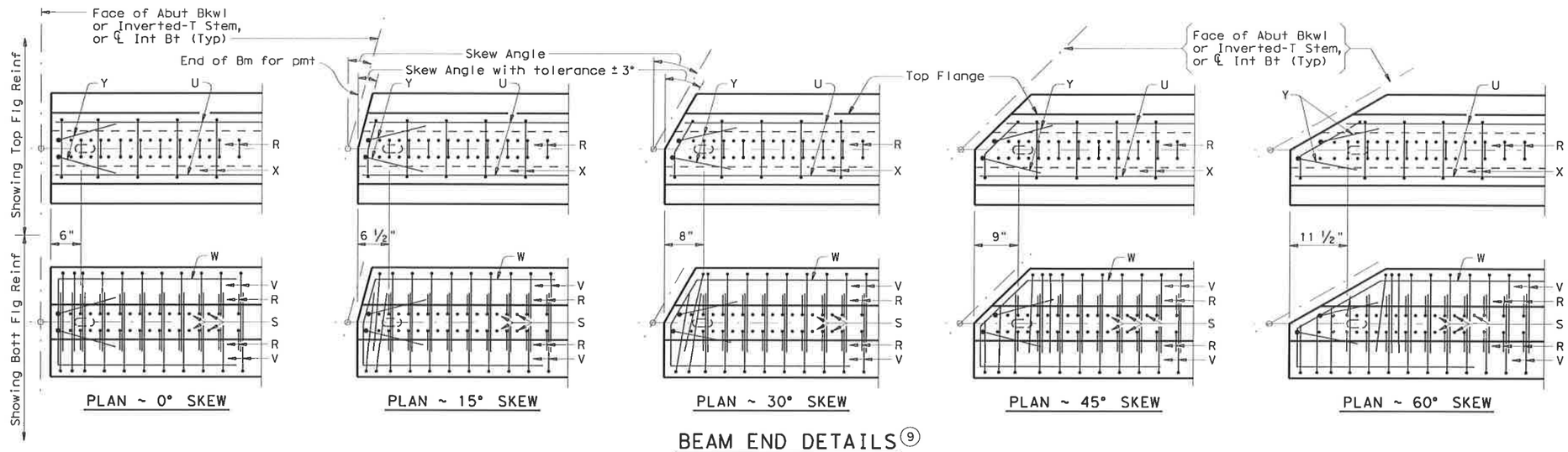

BEAM END DETAILS (9)

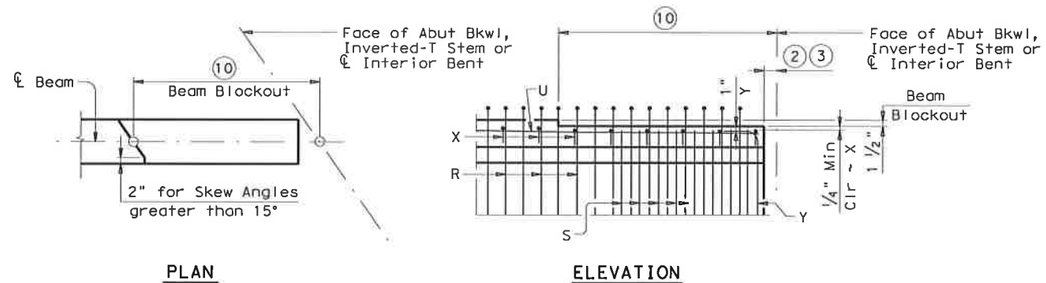

BEAM BLOCKOUT DETAIL FOR THICKENED SLAB END (11)

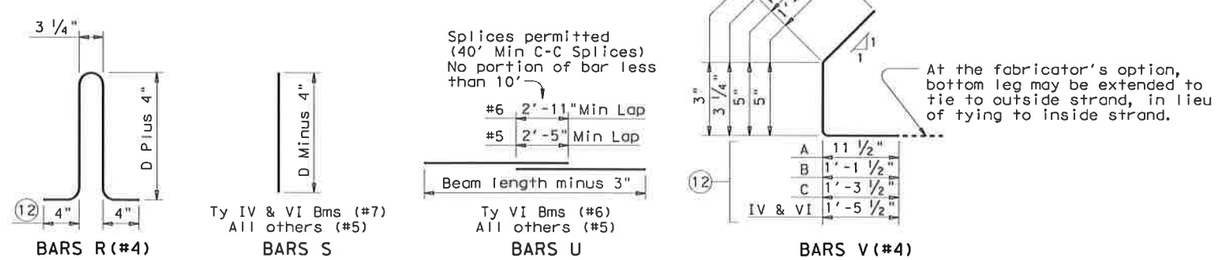

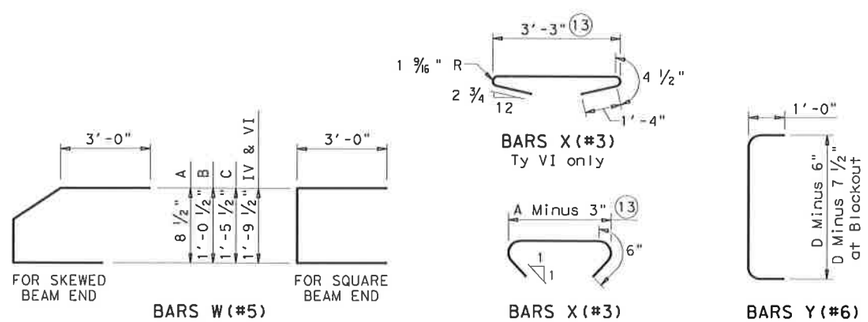

(2) 3" ~ Inverted-T Stem, 2" ~ Abutment Bkwl and Interior Bents.

(3) Measured along ℄ Beam at Interior Bents; perpendicular to Abutment Bkwl or Inverted-T Stem.

(9) Reinforcing patterns shown are to be used as guides in determining the reinforcement for the actual beam type (Type C shown) and the skew angle used. In general, the distance between consecutive Bars R and/or S shall be 2". This spacing may be varied in order to avoid Dowel Holes or Concrete End Diaphragm Option holes. However, a minimum cross sectional area equivalent to that of Bars R & S in a square beam end shall be provided.

(10) 4'-0" ÷ Cos Skew Angle. Skew Angle = 90° - Beam Angle.

(11) Beam blockout required only when beam haunch at ℄ Brg is less than 2". Haunch = top of slab to top of beam dimension minus slab thickness.

(12) Bars may be cut or bent at skewed end as required.

(13) Increase for first bar at skewed end.

HL93 LOADING

Sheet 2 of 2

Texas Department of Transportation
Bridge Division

PRESTRESSED CONCRETE I-BEAM DETAILS

IBD

FILE: ibdstdet.dgn	DN: TxDOT	CK: TxDOT	DW: TxDOT	CK: TxDOT
(C) TxDOT January 2005	DISTRICT	FEDERAL AID PROJECT		SHEET
REVISIONS	SAT			644
	COUNTY	CONTROL	SECT	JOB	HIGHWAY
	BEXAR	2708	01	022	FM2696

DISCLAIMER:
The use of this standard is governed by the "Texas Engineering Practice Act". No warranty of any kind is made by TxDOT for any purpose whatsoever. TxDOT assumes no responsibility for the conversion of this standard to other formats or for incorrect results or damages resulting from its use.

ACC:
LEVELS

STRUCTURE	SPAN NO.	BEAM NO.	BEAM TYPE	NON-STD STRAND PATTERN	DESIGNED BEAMS (DEPRESSED STRANDS) PRESTRESSING STRANDS TOTAL NO.	TOTAL SIZE (in)	TOTAL STRGTH fpu (ksi)	TOTAL "e" ℄ (in)	TOTAL "e" END (in)	DEPRESSED NO.	DEPRESSED TO (in)	CONCRETE RELEASE STRGTH f'ci (ksi)	CONCRETE MINIMUM 28 DAY COMP STRGTH f'c (ksi)	OPTIONAL DESIGN DESIGN LOAD COMP STRESS (TOP ℄) (SERVICE I) fct(ksi)	DESIGN LOAD TENSILE STRESS (BOTT ℄) (SERVICE III) fcb(ksi)	REQUIRED MINIMUM ULTIMATE MOMENT CAPACITY (STRENGTH I) (ft-kips)	LIVE LOAD DISTRIB FACTOR (1)
PANTHER SPRINGS CREEK BRIDGE STRUCTURE NO. 9	ALL	ALL	B		24	1/2	270	10.76	7.43	8	18	6,023	6,023	3,026	3,938	2,344	0.59

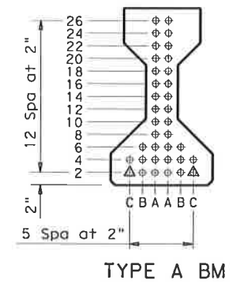

TYPE A BM (2)

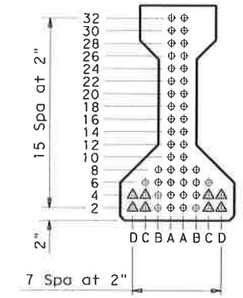

TYPE B BM (2)

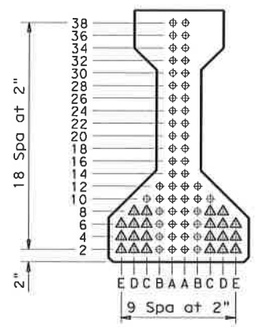

TYPE C BM (2)

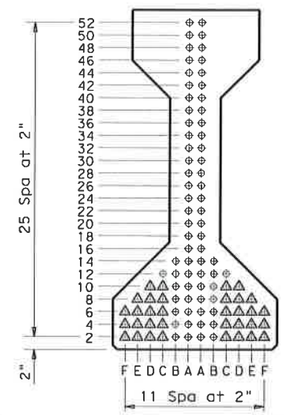

TYPE IV BM (2)
(AASHTO TYPE IV BM)

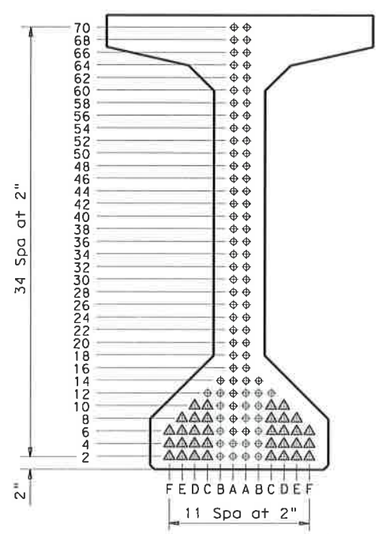

TYPE VI BM (2)
(AASHTO TYPE VI BM)

NON-STANDARD STRAND PATTERNS

PATTERN	STRAND ARRANGEMENT AT ℄ OF BEAM

GENERAL NOTES:

Designed in accordance with AASHTO LRFD Specifications.

All concrete shall be Class H. All reinforcing bars shall be Grade 60.

When shown on this sheet, the Fabricator has the option of furnishing either the designed depressed strand beam or an approved optional design. All optional design submittals shall be signed, sealed and dated by a registered Professional Engineer.

Optional designs for beams 120 feet or longer shall have a calculated residual camber equal to or greater than that of the designed beam.

Prestress losses for the designed beams have been calculated for a relative humidity of 70 percent. Optional designs shall likewise conform.

Certain beams with depressed strands are subject to cracking in the end of the beam. When such cracks occur, all subsequent beams of the same type and strand pattern shall have strands debonded in the following manner:

1. Alternate rows of depressed strands shall be debonded for two feet from each end of the beam.
2. One half of the straight strands, as nearly as possible, shall be debonded for four feet from each end of the beam.
3. The debonding pattern shall be symmetrical about the vertical axis of the beam for both depressed and straight strands.
4. Strands shall be debonded so that the centers of gravity of the depressed strands and the straight strands will remain within one inch of their original location.
5. Strands shall be encased in plastic tubing along entire debonded length, and ends of tubing shall be sealed with waterproof tape. Split plastic tubing may be used provided the seam of the tubing is sufficiently sealed with waterproof tape to prohibit grout infiltration. Wrapping of strands with tape to provide debonding will not be permitted.
6. Revised shop drawings will not be required.

For depressed strand designed beams, strands shall be located as low as possible on the 2" grid system unless a Non-Standard Strand Pattern is indicated. Fill row "2", then row "4", then row "6", etc., beginning each row in the "A" position and working outward until the required number of strands is reached. All strands in the "A" position shall be depressed, maintaining the 2" spacing so that, at the beam ends, the upper two strands are in the position shown in the table.

Strands for the designed beam shall be low relaxation strands pretensioned to 75 percent of fpu each.

(1) Portion of full HL93

(2) Full-length debonded strands are only permitted in strand positions marked Δ. Double wrap full-length debonded strands in outermost position of each row. Full-length debonding must comply with Item 426.4.F.4.

HL93 LOADING

STATE OF TEXAS
THOMAS W. STEPHENSON
91178
LICENSED
PROFESSIONAL ENGINEER
10/9/07

Texas Department of Transportation
Bridge Division

PRESTRESSED CONCRETE I-BEAM DESIGNS (NON-STANDARD SPANS)

IBND

FILE: ibndstel.dgn	DN: TxDOT	CK: TxDOT	DW: TxDOT	CK: TxDOT
© TxDOT January 2005	DISTRICT	FEDERAL AID PROJECT		SHEET
REVISIONS	SAT			645
01-06: Full-length debonding	COUNTY	CONTROL	SECT	JOB	HIGHWAY
	BEXAR	2708	01	022	FM2696

DISCLAIMER:
The use of this standard is governed by the "Texas Engineering Practice Act". No warranty of any kind is made by TxDOT for any purpose whatsoever. TxDOT assumes no responsibility for the conversion of this standard to other formats or for incorrect results or damages resulting from its use.

ACC:
J
LEVELS
1

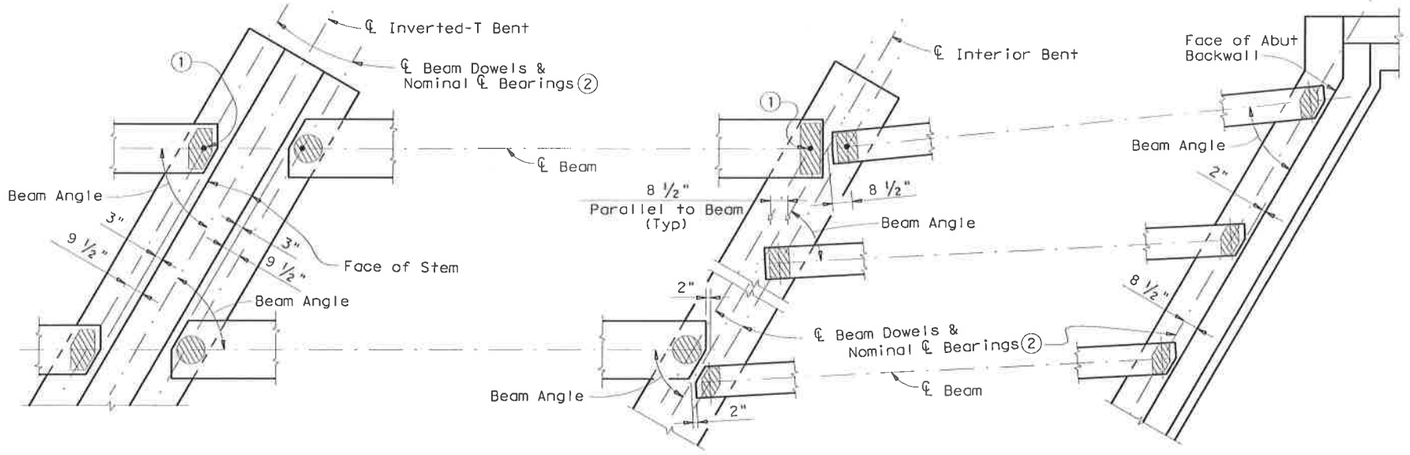

AT INVERTED-T BENT WITH SKEW

AT CONVENTIONAL INTERIOR BENT WITH SKEW

AT ABUTMENT WITH SKEW (3)

(1) Dowel at doweled beam end [labeled (D) on Bridge Layout]. Required for outside beams only or as shown on substructure details.

(2) For purposes of computing Bearing Seat Elevations, nominal centerline of bearing shall be defined as shown. The actual center of bearing pad may vary from this line.

(3) For Transition Bents with backwall, beams and elastomeric bearings shall receive the same treatment as shown for Abutments.

(4) When angle exceeds 0°, one or both beam ends shall be clipped to maintain the clearance between beam ends as shown in view.

(5) See Elastomeric Bearing Data Table for Bearing size. Corner clips in Table not applicable for this situation. Table reflects beam conflicts of this type on radial bents only.

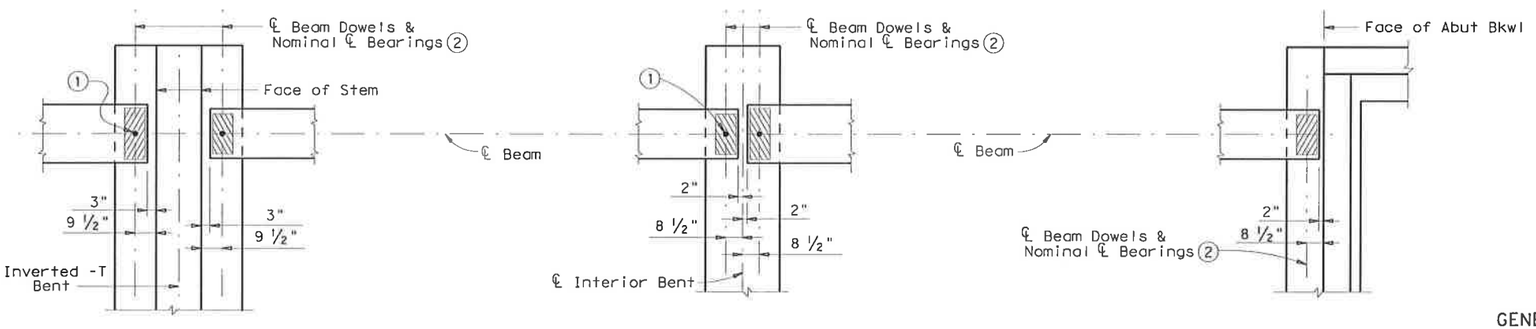

AT INVERTED-T BENT

AT CONVENTIONAL INTERIOR BENT

AT ABUTMENT

BEAM END DETAILS

GENERAL NOTES:

These details accommodate skew angles up to 60°.

Shop drawings for approval are required.

A bearing layout which identifies location and orientation of all bearings shall be developed by the bearing fabricator. Permanently mark each bearing in accordance with the bearing layout. A copy of the bearing layout is to be provided to the Engineer.

Cost of furnishing and installing elastomeric bearings shall be included in unit price bid for "Prestressed Concrete Beams".

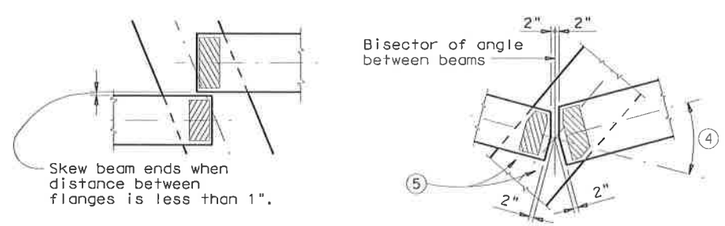

BEAM CONFLICT DETAILS

HL93 LOADING

Sheet 1 of 2

Texas Department of Transportation
Bridge Division

ELASTOMERIC BEARING AND BEAM END DETAILS

PRESTR CONCRETE I-BEAMS

IBEB

FILE: ibebstei.dgn	DN: TxDOT	CK: TxDOT	DW: TxDOT	CK: TxDOT	
© TxDOT January 2005	DISTRICT	FEDERAL AID PROJECT			SHEET 46
REVISIONS	SAT				
Rev. 4-05: Taper Tolerance and Shop Drawings	COUNTY	CONTROL	SECT	JOB	HIGHWAY
	BEXAR	2708	01	022	FM2696

DISCLAIMER:
The use of this standard is governed by the "Texas Engineering Practice Act". No warranty of any kind is made by TxDOT for any purpose whatsoever. TxDOT assumes no responsibility for the conversion of this standard to other formats or for incorrect results or damages resulting from its use.

ACC:

LEVELS

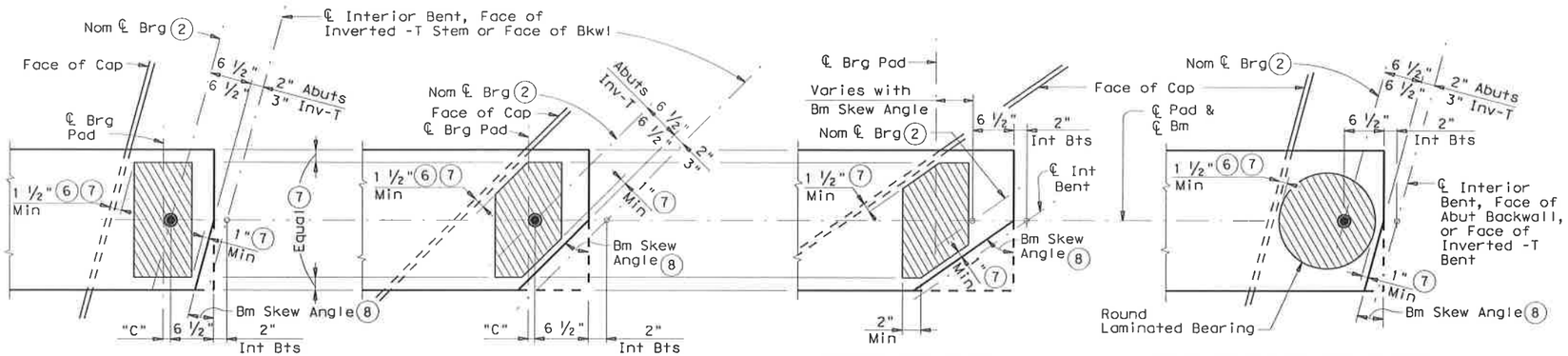

SKEWED BMS ENDS AT CONV INT BENTS

ROUND BEARINGS FOR SKEWED TYPE IV & VI BEAMS ONLY

ELASTOMERIC BEARING PLACEMENT DIAGRAMS

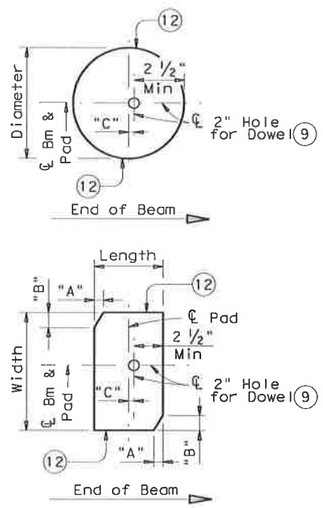

PLANS (10)

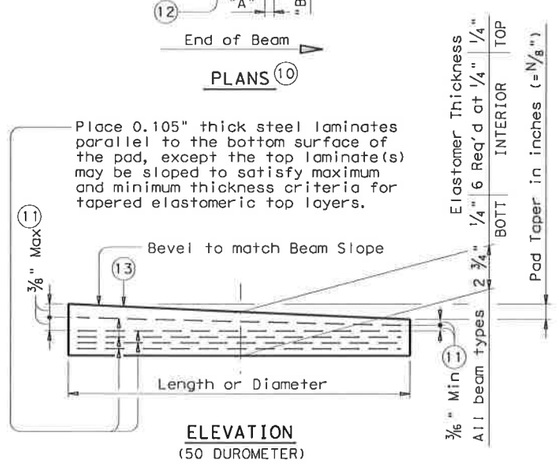

ELEVATION
(50 DUROMETER)

LAMINATED ELASTOMERIC BEARING DETAILS (14)

(2) For purposes of computing Bearing Seat Elevations, nominal centerline of bearing shall be defined as shown. The actual center of bearing pad may vary from this line.

(6) 3" for Inverted -T.

(7) Factors controlling laminated bearing placement if no dowel is present. Place ℄ Pad as near Nominal ℄ Brg as possible between limits shown.

(8) Complement of Beam Angle except at some conflicting beams.

(9) Provide 2" Dia Hole (always on beam end side of centerline pad) only at locations required. See substructure details for location. The Dowel offset "C" dimension may be 0" when the bridge is square.

(10) See Elastomeric Bearing Data Table for dimensions.

(11) Maximum and minimum layer thicknesses shown are for elastomer only, on tapered layers.

(12) Locate Permanent Mark here.

(13) BEARING TYPE shall be indicated on all pads. For tapered pads, BEARING TYPE shall be located on the high side. The Fabricator shall include the value of "N" (amount of taper in ⅛" increments) in this mark.
Examples: N=0, (for 0" taper)
N=1, (for ⅛" taper)
N=2, (for ¼" taper)
(etc.)
Fabricated pad top surface slope shall not vary from plan beam slope by more than $\left(\frac{0.0625"}{\text{Length or Dia}}\right)$ IN/IN.

(14) The use of Polyisoprene (natural rubber), for the manufacture of bearing pads, is not permitted.

(15) Substructure dimensions must satisfy the minimums provided to accommodate the elastomeric bearings shown on this standard.

(16) Interpolate "C" values for angles not shown between 30° & 40°, 40° & 50°, 50° & 60°.

TABLE OF MINIMUM SUBSTRUCTURE DIMENSIONS (15)

Beam Type	Abutments: Face of Bkwl to Face of Cap	Int Bents: Overall Cap Width	Inv-T Bents: Corbel Width
A, B, & C	1'-4 ½"	2'-9"	1'-8"
IV	1'-7 ½"	3'-3"	1'-10"
VI	1'-10 ½"	3'-9"	2'-0"

ELASTOMERIC BEARING DATA TABLE

Bent Type	Beam Type	Brg Type (13)	Beam End Skew Angle Range	Pad Size Lgth x Wdth	Pad Clip Dimensions "A"	Pad Clip Dimensions "B"	"C" (9)
AT ABUTMENTS, INVERTED - T & TRANSITION BENTS WITH BACKWALLS	A	A-1-"N"	0° thru 15°	7" x 12"	—	—	—
	A	A-2-"N"	15° + thru 45°	7" x 12"	1 ¼"	1 ¼"	¾"
	A	A-3-"N"	45° + thru 60°	7" x 12"	1 ½"	2"	1"
	B	B-1-"N"	0° thru 15°	7" x 14"	—	—	—
	B	B-2-"N"	15° + thru 45°	7" x 14"	2 ¼"	2 ¼"	¾"
	B	B-3-"N"	45° + thru 60°	7" x 14"	3 ¾"	2 ¼"	1"
	C	C-1-"N"	0° thru 15°	7" x 16"	—	—	—
	C	C-2-"N"	15° + thru 45°	7" x 16"	3 ¼"	3 ¼"	¾"
	C	C-3-"N"	45° + thru 60°	8" x 16"	6"	4"	1"
	IV	IV-1-"N"	0° thru 15°	7" x 22"	—	—	1"
	IV	IV-2-"N"	15° + thru 29°	7" x 22"	2 ½"	4 ½"	1"
	IV	IV-3-"N"	30° (16)	15" Dia	—	—	2 ⅜"
	IV	IV-4-"N"	40° (16)	15" Dia	—	—	2 ⅝"
	IV	IV-5-"N"	50° (16)	15" Dia	—	—	3 ⅛"
	IV	IV-6-"N"	60° (16)	15" Dia	—	—	4"
	VI	VI-1-"N"	0° thru 15°	9" x 24"	—	—	2"
	VI	VI-2-"N"	15° + thru 29°	9" x 24"	3 ¼"	5 ½"	2"
	VI	VI-3-"N"	30° (16)	17" Dia	—	—	3 ¾"
	VI	VI-4-"N"	40° (16)	17" Dia	—	—	4"
	VI	VI-5-"N"	50° (16)	17" Dia	—	—	5 ½"
	VI	VI-6-"N"	60° (16)	17" Dia	—	—	6"
AT CONVENTIONAL INTERIOR BENTS, Sq Bm Ends	A	A-4-"N"	Not Applicable	7" x 12"	—	—	—
	B	B-4-"N"	Not Applicable	7" x 14"	—	—	—
	C	C-4-"N"	Not Applicable	7" x 16"	—	—	—
	IV	IV-7-"N"	Not Applicable	7" x 22"	—	—	—
	VI	VI-7-"N"	Not Applicable	9" x 24"	—	—	—
AT CONVENTIONAL INTERIOR BENTS, Skewed Bm Ends	A	A-5-"N"	0° thru 15°	7" x 12"	—	—	—
	A	A-6-"N"	15° + thru 60°	7" x 12"	1"	1"	—
	B	B-5-"N"	0° thru 15°	7" x 14"	—	—	—
	B	B-6-"N"	15° + thru 45°	7" x 14"	1 ¾"	1 ¾"	—
	B	B-7-"N"	45° + thru 60°	7" x 14"	2 ¾"	1 ¾"	—
	C	C-5-"N"	0° thru 15°	7" x 16"	—	—	½"
	C	C-6-"N"	15° + thru 45°	7" x 16"	2 ¾"	2 ¾"	—
	C	C-7-"N"	45° + thru 60°	7" x 16"	4 ½"	2 ¾"	—
	IV	IV-8-"N"	0° thru 15°	7" x 22"	—	—	1"
	IV	IV-9-"N"	15° + thru 29°	7" x 22"	1 ¼"	2"	—
	IV	IV-10-"N"	29° + thru 60°	15" Dia	—	—	—
	VI	VI-8-"N"	0° thru 15°	9" x 24"	1"	3 ¾"	1 ½"
	VI	VI-9-"N"	15° + thru 29°	9" x 24"	1"	2"	—
	VI	VI-10-"N"	29° + thru 60°	17" Dia	—	—	—

DISCLAIMER:
The use of this standard is governed by the "Texas Engineering Practice Act". No warranty of any kind is made by TxDOT for any purpose whatsoever. TxDOT assumes no responsibility for the conversion of this standard to other formats or for incorrect results or damages resulting from its use.

ACC:
LEVELS 0 1

HL93 LOADING

Texas Department of Transportation
Bridge Division

ELASTOMERIC BEARING AND BEAM END DETAILS

PRESTR CONCRETE I-BEAMS

IBEB

FILE: ibebste1.dgn	DN: TxDOT	CK: TxDOT	DW: TxDOT	CK: TxDOT
© TxDOT January 2005	DISTRICT	FEDERAL AID PROJECT		SHEET
REVISIONS Rev. 4-05: Taper Tolerance and Shop Drawings	SAT			647
	COUNTY	CONTROL	SECT	JOB	HIGHWAY
	BEXAR	2708	01	022	FM2696

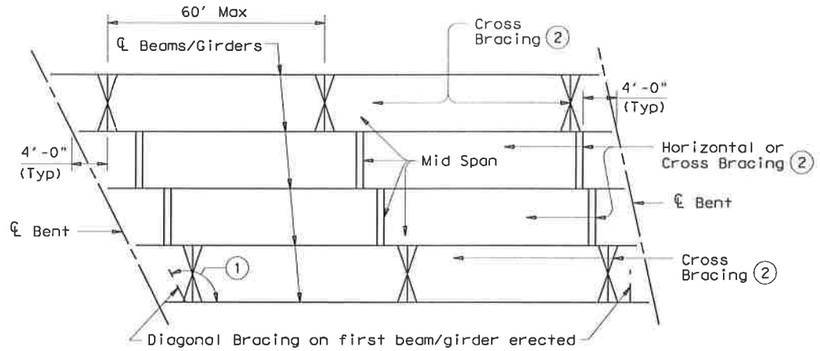

ERECTION BRACING

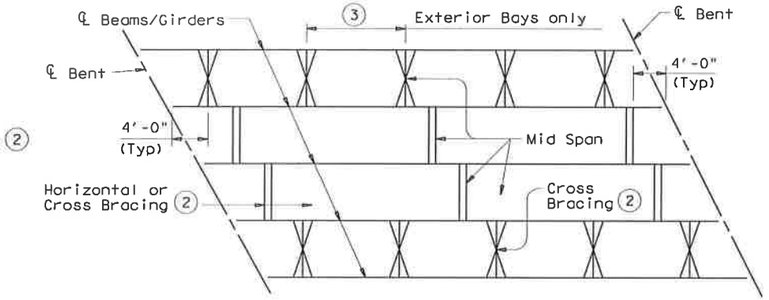

SLAB PLACEMENT BRACING

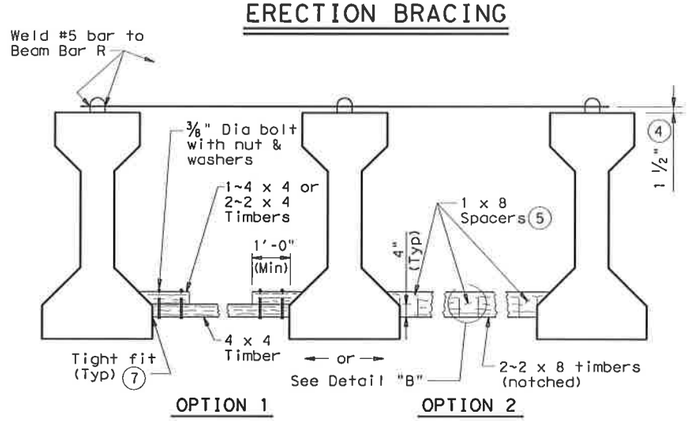

HORIZONTAL BRACING DETAILS (6)

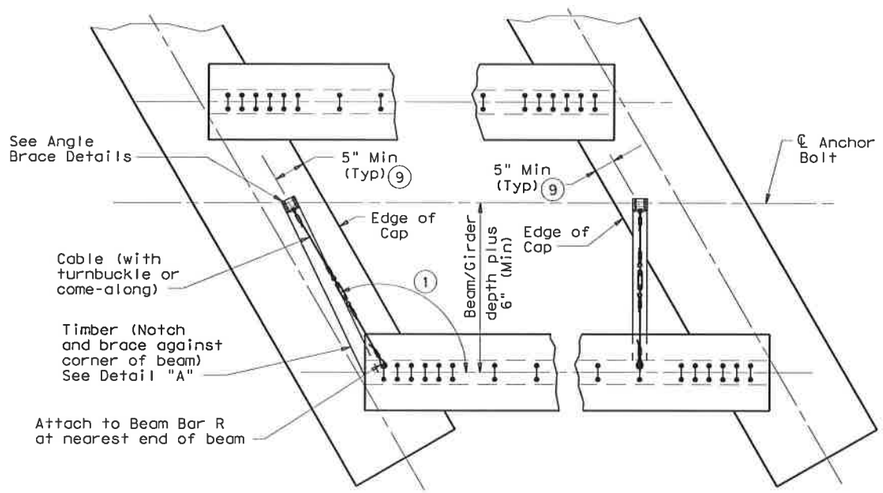

PLAN

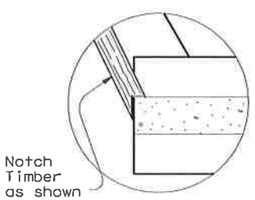

DETAIL "A"

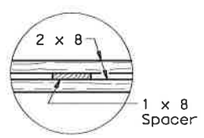

PLAN

DETAIL "B"

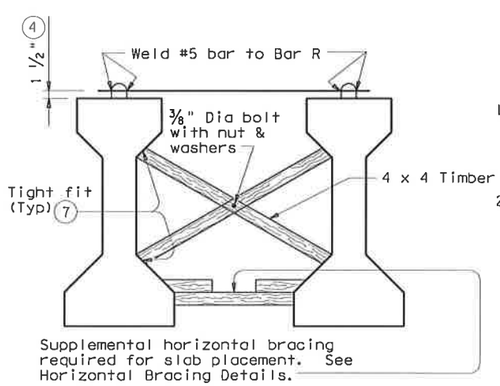

CROSS BRACING DETAIL (6)

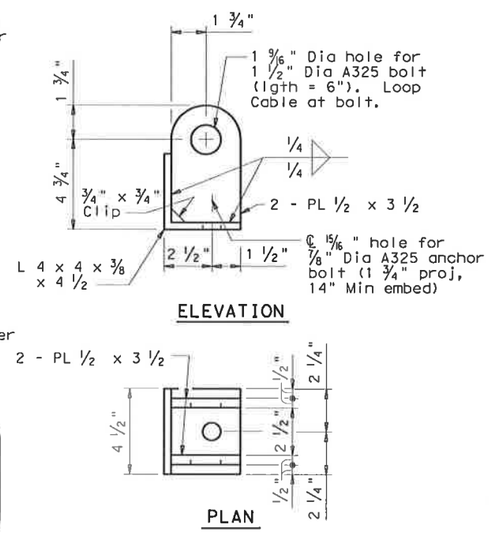

ANGLE BRACE DETAILS

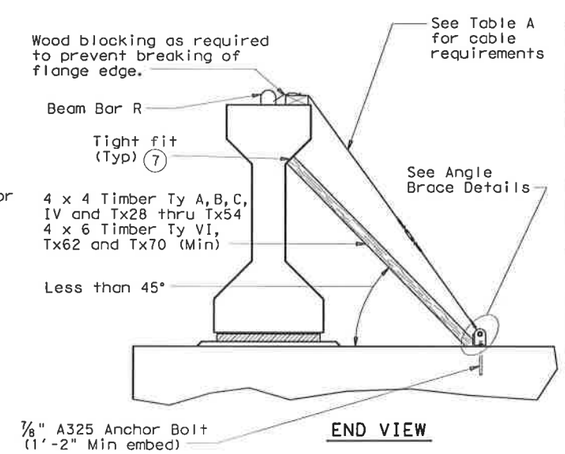

DIAGONAL BRACING DETAILS (6)

(To be used on both ends of the first beam/girder erected in the span.)

TABLE A	
Girder /Beam Type	Min Cable Breaking Strength (8)
A	10.5 K
B	12.5 K
C	15.9 K
IV	21.8 K
VI	26.8 K
Tx28	18.9 K
Tx34	21.6 K
Tx40	23.1 K
Tx46	24.5 K
Tx54	26.2 K
Tx62	27.9 K
Tx70	27.9 K

HAULING & ERECTION:

The Contractor's attention is directed to the possible lateral instability of prestressed concrete beams and girders over 130' long, especially during hauling and erection. The use of the following methods to improve stability is encouraged: Locate lifting devices at the maximum practical distance from beam ends; use external lateral stiffening devices during hauling and erection; lift with vertical lines using two machines; and take care in handling to minimize inertial and impact forces.

ERECTION BRACING:

Erection bracing details shown are considered the minimum for fulfilling the bracing requirements of Item 425.

Required erection bracing must be placed immediately after erection of each beam and remain in place until additional bracing as required for slab placement is in place. This standard is needed in all cases to meet requirements for Slab Placement Bracing.

SLAB PLACEMENT BRACING:

The details for slab placement bracing are considered minimum for fulfilling the requirements of Specification Item 420.

Required slab placement bracing must remain in place until slab concrete has attained a compressive strength of 3000 psi.

GENERAL NOTES:

Bracing details for closely spaced beams and girders (as on ramps or railroad structures) are not included. Details for spans longer than 150' are not provided. The Contractor must submit his proposed bracing details for such conditions to the Engineer for approval prior to erection.

Systems equal to or better than those shown may be used provided details of such systems are submitted to and approved by the Engineer prior to erection.

Use of these systems and/or details does not relieve the Contractor of the responsibility for the adequacy of the bracing and the safety of the structure.

Removal of bracing for short periods of time to align beams and girders is permissible.

All turn-buckles, come-alongs, anchors and other connections must be capable of developing the full strength of the cable shown.

(1) If angle shown exceeds 120 degrees, move diagonal brace to other side of beam/girder and place square to beam/girder. This may prevent exterior beam from being erected first.

(2) Cross bracing must be placed between the first two beams/girders erected, in exterior bays, and in every fourth bay. At the Contractor's option, remaining bays may have either cross-bracing or horizontal bracing.

(3) 15'-0" Max for Type A, B beams and Tx28 and Tx34 girders. 30'-0" Max for all others.

(4) Place and weld #5 bars as shown during erection. If forming deck with prestressed panels, bars can be temporarily removed, one at a time, during panel erection. Re-install bar prior to additional panel erection. Bars can rest on panels and be bent down and welded to Beam Bars R.

(5) Clear distance between spacers must not exceed 3'. Nail together with 16d nails.

(6) Pressure treated landscape timbers can not be used.

(7) Use wedges as necessary to obtain tight fit. Nail wedges to timbers.

(8) All hardware used with cable must be able to develop the minimum breaking strength specified. Use thimbles at all loops in cable. Install cable clamps with saddles bearing against the live end and U-bolts bearing aginst the dead end.

(9) It is acceptable to tie anchor bolts to cap reinforcement.

Texas Department of Transportation
Bridge Division

MINIMUM ERECTION AND BRACING REQUIREMENTS
PRESTRESSED CONCRETE I-BEAMS AND I-GIRDERS

MEBR(C)

FILE: mebcstel.dgn	DN: TxDOT	CK: TxDOT	DW: TxDOT	CK: TxDOT
© TxDOT January 2005	DISTRICT	FEDERAL AID PROJECT		SHEET
REVISIONS	SAT			48
06-2007: Revised "Cross Bracing Detail", Hauling, Erection Note and added I-Girders.	COUNTY	CONTROL	SECT	JOB	HIGHWAY
	BEXAR	2708	01	022	FM2696

DISCLAIMER:
The use of this standard is governed by the "Texas Engineering Practice Act". No warranty of any kind is made by TxDOT for any purpose whatsoever. TxDOT assumes no responsibility for the conversion of this standard to other formats or for incorrect results or damages resulting from its use.

ACC:

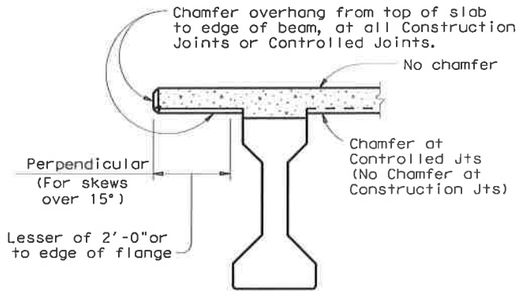

CHAMFER LIMITS DETAIL (1)

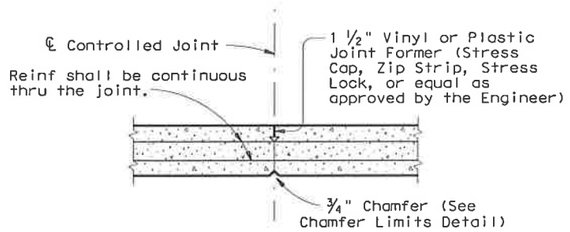

CONTROLLED JOINT DETAIL

(Saw-cutting will not be allowed)

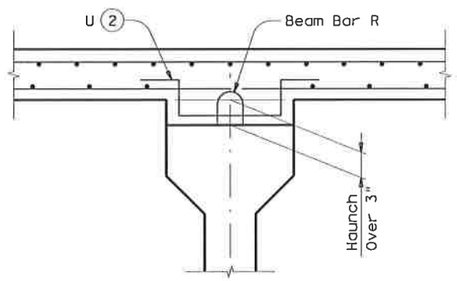

HAUNCH REINFORCING DETAIL

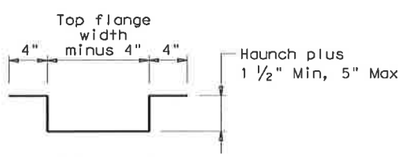

BARS U (#4)

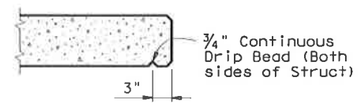

DRIP BEAD DETAIL

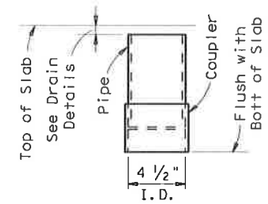

C-I-P DRAIN DETAIL (8)

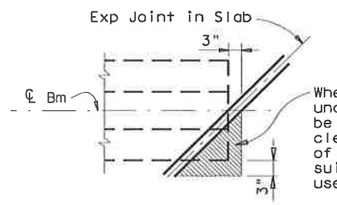

Where corners of Beam Flanges project under slab of adjacent span, care shall be taken to provide a minimum of ½" clearance between top of beam and bottom of adjacent slab. Polystyrene or other suitable compressible material may be used as a filler.

TREATMENT AT BEAM END FOR SKEWED SPANS

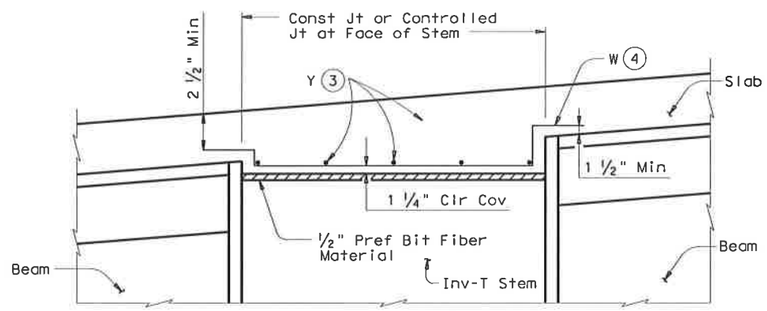

REINFORCEMENT OVER INV-T BENTS

Slab reinforcement not shown for clarity.

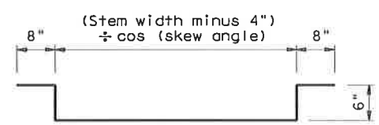

BARS W (#4)

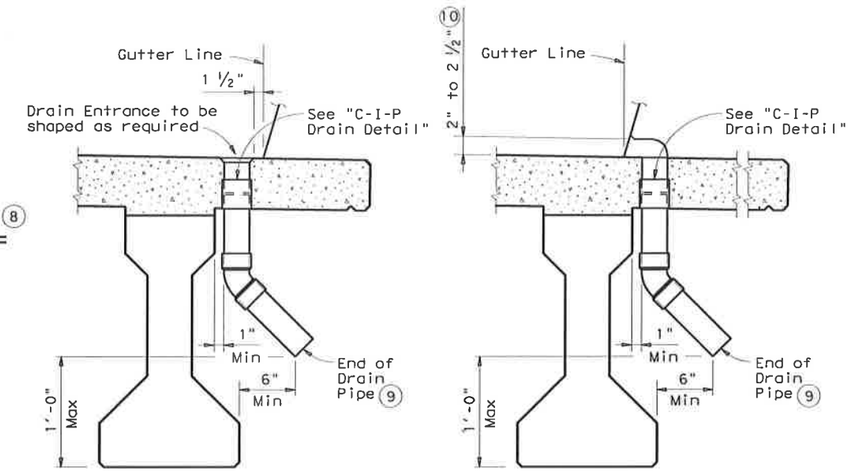

DRAIN DETAILS (11)

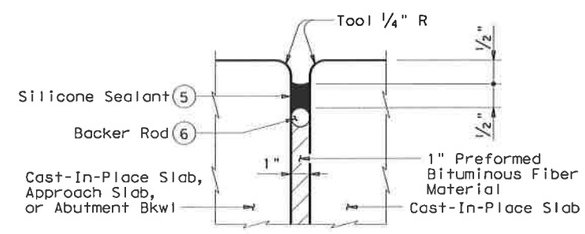

TYPE A JOINT DETAIL (7)

GENERAL NOTES:

Designed in accordance with AASHTO LRFD Specifications.

All items (reinforcing steel, drains, joint formers, etc.) shown on this sheet shall be considered subsidiary to other bid items.

(1) See Span details for type of joint and joint locations.

(2) Space Bars U with Beam Bars R in all areas where measured haunch exceeds 3".

(3) Space Bars Y (#4) at 12" Max. Use 2" end cover. Number of Bars Y must satisfy spacing limit. Place parallel to bent.

(4) Space Bars W at 12" Max (3" from end of cap). Tilt if necessary to maintain cover requirements. Place parallel to longitudinal slab reinforcement.

(5) Class 7 silicone sealant that conforms to DMS-6310. Install when ambient temperature is between 55°F and 85°F and rising. Engineer to determine allowable hours for sealant application.

(6) 1 ¼" backer rod must be compatible with joint sealant. Use of multiple pieces to create a backer rod cross section is not permitted. Top of backer rod must be convex as shown.

(7) The maximum distance between Type A expansion joints is 100'. See Bridge Layout for location of joints. Type A joints will not be paid for directly, but shall be considered subsidiary to Item 420, "Concrete Structures".

(8) Roughen outside of PVC with coarse rasp or equal to ensure bond with cast-in-place concrete.

(9) No water shall be discharged onto girders.

(10) Drain Entrance formed in Rail or Sidewalk.

(11) All drain pipe and fittings to be 4" diameter (Sch 40) PVC. See Item 481 "PVC Pipe for Drains" for pipe, connections and solvent welding. Bend reinforcing steel to clear PVC 1". Drain length and location shall be as directed by the Engineer. No drains shall be permitted over roadways or railways, or within 10'-0" of Bent Caps. Degrease outside of exposed PVC, apply acrylic water base primer, then coat with same surface finishing material as used for outside girder face. Variations of the above designs, as required for the type of rail used and its location on the structure, shall be installed with the approval and direction of the Engineer.

DISCLAIMER:
The use of this standard is governed by the "Texas Engineering Practice Act". No warranty of any kind is made by TxDOT for any purpose whatsoever. TxDOT assumes no responsibility for the conversion of this standard to other formats or for incorrect results or damages resulting from its use.

ACC:

LEVELS 1 2 3

Texas Department of Transportation
Bridge Division

MISCELLANEOUS SLAB DETAILS
PRESTR CONCRETE I-BEAMS

IBMS

FILE: ibmsste1.dgn	DN: TxDOT	CK: TxDOT	DW: TxDOT	CK: TxDOT	
©TxDOT January 2005	DISTRICT	FEDERAL AID PROJECT			SHEET 649
REVISIONS	SAT				
	COUNTY		CONTROL	SECT	JOB	HIGHWAY
	BEXAR		2708	01	022	FM2696

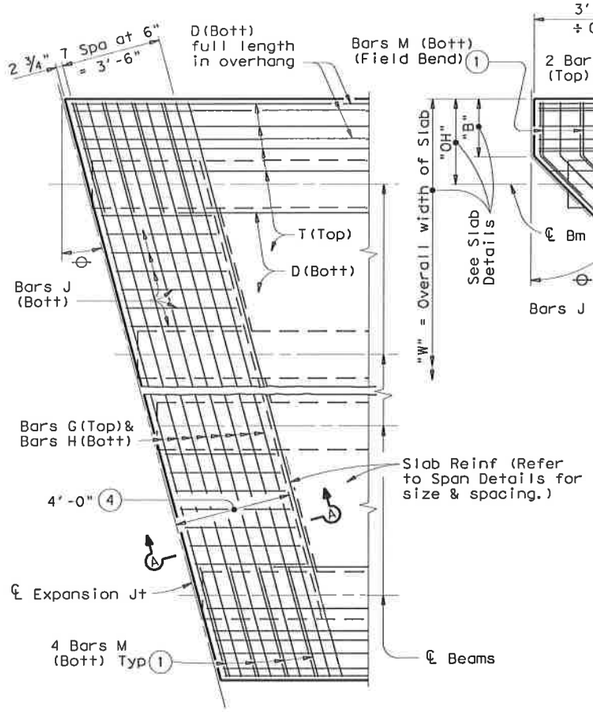

PARTIAL PLAN FOR
SLABS WITHOUT BREAKBACK

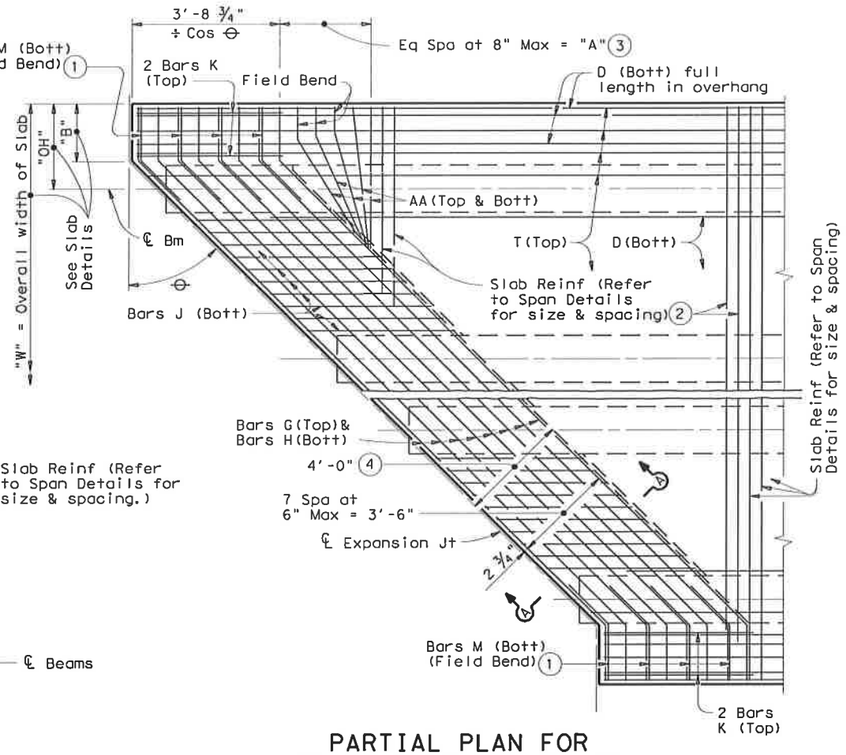

PARTIAL PLAN FOR
SLABS WITH BREAKBACK

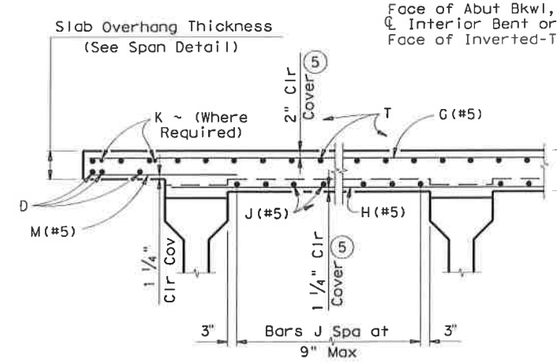

TYPICAL TRANSVERSE SECTION

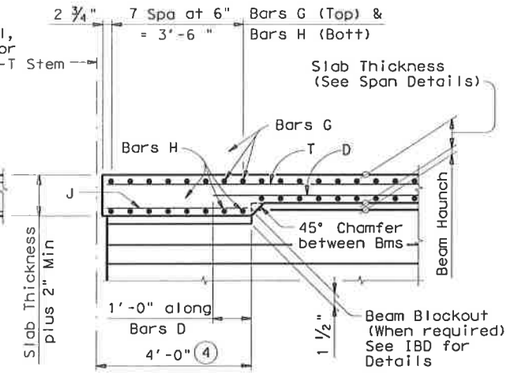

SECTION A-A

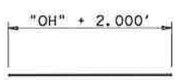

BARS AA (#5)

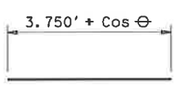

BARS J (#5)

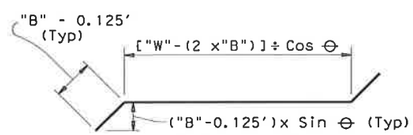

BARS G (#5)
(For Slabs With Breakbacks)

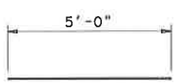

BARS K (#5)

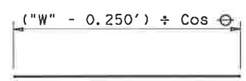

BARS G (#5)
(For Slabs Without Breakbacks)

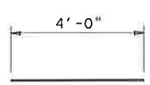

BARS M (#5)

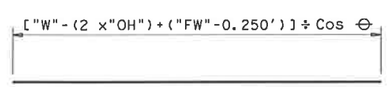

"FW" = Beam's top flange width (ft)

BARS H (#5)

1. 1' Max Spacing measured along slab edge.
2. End the top transverse reinforcement steel at inside Bar G. End the bottom transverse reinforcement steel 1'-0" beyond inside Bar G.
3. $\text{"A"} = (\text{"OH"} + 2.125' + \frac{0.052'}{\sin\theta} - \text{"B"}) \times \tan\theta$
4. Thickened Slab End dimensioned perpendicular to Face of Bkwl, Centerline Interior Bent or Face of Inverted-T Stem.
5. Clear Cover shall be as indicated unless otherwise shown on Span Details.

GENERAL NOTES:

Designed according to AASHTO LRFD Specifications.

These details are to be used in conjunction with the Span Details and Standard PCP (if prestressed concrete panels are used).

All reinforcing bars shall be Grade 60 steel.

Unless otherwise shown or noted hereon, all Span Details remain unchanged.

If slab reinforcing steel is shown on the Slab Details to be epoxy coated, then Bars AA, G, K, H, J and M shall be epoxy coated.

Bar laps, where required, shall be as follows:

Uncoated ~ #4 = 1'-5"
~ #5 = 1'-9"
Epoxy Coated ~ #4 = 2'-1"
~ #5 = 2'-7"

HL93 LOADING

Texas Department of Transportation
Bridge Division

THICKENED SLAB END DETAILS

PRESTR CONC I-BEAM SPANS

IBTS

FILE: ibtsstel.dgn	DN: TxDOT	CK: TxDOT	DW: TxDOT	CK: TxDOT
© TxDOT January 2005	DISTRICT	FEDERAL AID PROJECT		SHEET
REVISIONS	SAT			650
	COUNTY	CONTROL	SECT	JOB	HIGHWAY
	BEXAR	2708	01	022	FM2696

DISCLAIMER:
The use of this standard is governed by the "Texas Engineering Practice Act". No warranty of any kind is made by TxDOT for any purpose whatsoever. TxDOT assumes no responsibility for the conversion of this standard to other formats or for incorrect results or damages resulting from its use.

ACC:

LEVELS ☐

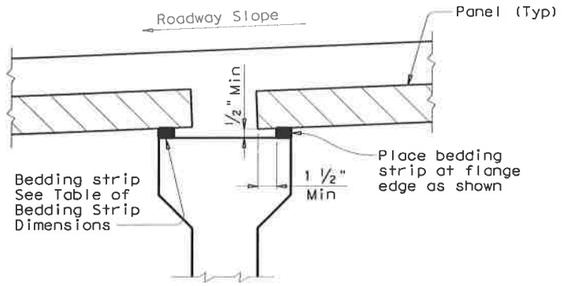

NORMAL GRADING DETAIL (1)

Showing Prestressed Concrete I-Beams.
(Other Beam Types Similar)

TABLE OF BEDDING STRIP DIMENSIONS		
WIDTH	HEIGHT (2)	
	Min	Max
1" (Min)	½"	2"
1 ¼"	½"	2 ½"
1 ½"	½"	3"
1 ¾"	½"	3 ½"
2" (Max)	½"	4"

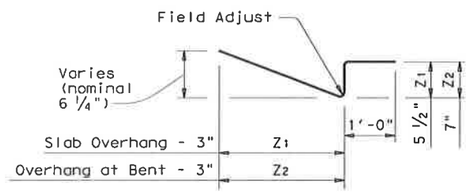

BARS Z (#4) (7)

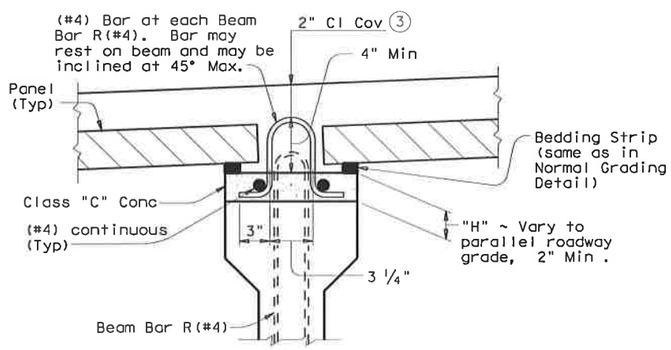

SPECIAL GRADING DETAILS FOR CONCRETE BEAMS (4)

Showing Prestressed Concrete I-Beams.
(U-Beams and I-Girders Similar)

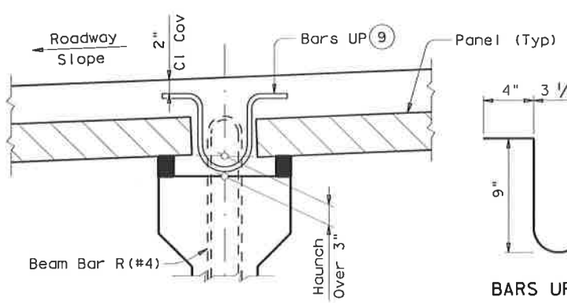

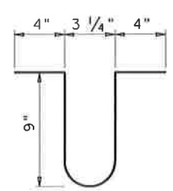

BARS UP (#4) (9)

HAUNCH REINFORCING DETAIL

Showing Prestressed Concrete I-Beams.
(U-Beams and I-Girders Similar)

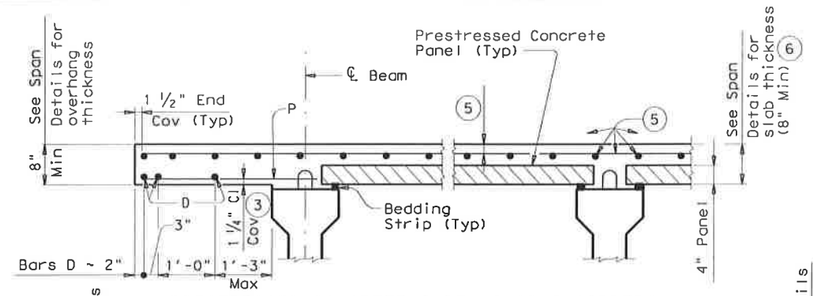

PRESTRESSED CONCRETE I-BEAMS OR I-GIRDERS

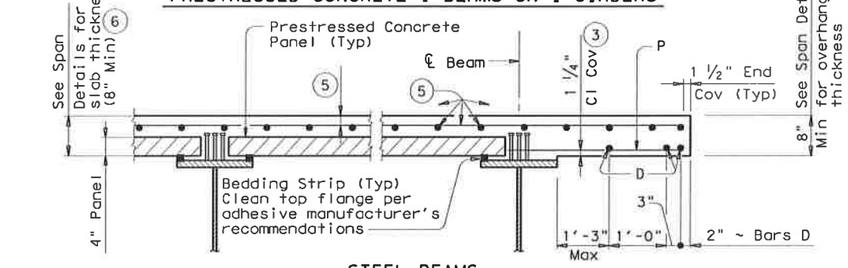

STEEL BEAMS

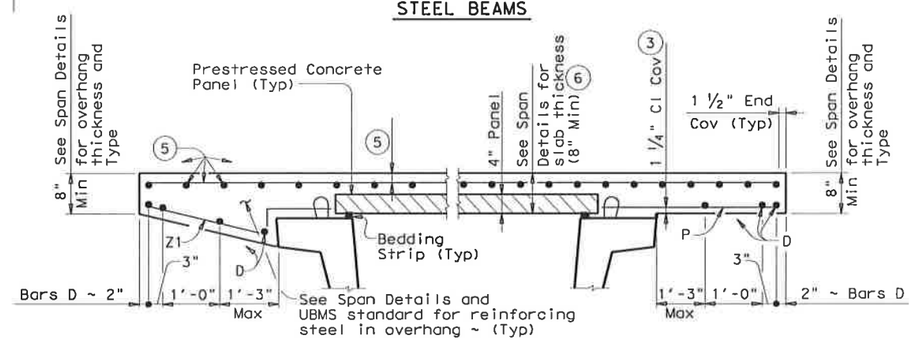

SLOPED OVERHANG WITH PRESTR CONC U-BEAMS

NORMAL OVERHANG WITH PRESTR CONC U-BEAMS

TYPICAL PART TRANSVERSE SECTIONS

(1) To reduce the quantity of cast-in-place concrete, bedding strip thickness may be increased in ¼" increments. Bedding strips must be comprised of one layer. Bond bedding strips to the beams with an adhesive compatible with bedding strips. Bedding strips over 2.5" high may need to be bonded to panels. The same thickness strip must be used under any one panel edge and the maximum change in thickness between adjacent panels must be ¼". Alternatively, bedding strips may be cut to grade. Panels may be supported by an alternate method, using a commercial product, if approved by the Engineer of Bridge Design, Bridge Division.

(2) Height must not exceed twice the width.

(3) Clear cover shall be as indicated unless otherwise shown on Span Details.

(4) For use where the distance between top of beam and finished grade can not be achieved within tolerances on cast-in-place slab thickness and thickness of bedding strips. Control dimensions shown in Normal Grading Detail still apply.

(5) See Span Details for top slab reinforcement and clear cover. Longitudinal top slab reinforcement may rest on top of prestressed concrete panels if necessary to maintain clear cover.

(6) The actual thickness constructed may exceed the slab thickness shown on the Span Details but, the extra thickness shall be no more than 2" for Prestressed Concrete I-Beams and 1" for Prestressed Concrete U-Beams and Steel Beams. Bearing Seat Elevations or finished grade may be adjusted.

(7) Bars Z1(#4) shall be field adjusted to match actual slope of slab overhangs. Width of slab overhang will vary along span with curved slab edges. Adjust Bar Z1(#4) dimensions to maintain proper cover. Bars Z2(#4) are located at Inv-T stems only.

(8) Max Spacing as listed unless otherwise shown.

(9) Space Bars UP(#4) with Beam Bars R(#4) in all areas where measured haunch exceeds 3".

TABLE OF REINFORCING STEEL (8)		
BAR	SIZE	Max Spa (in.)
A	#5	~
D	#5	9
E	#5	6
P	#4	18
UP	#4	~
Z	#4	18

CONSTRUCTION NOTES:

Erected panels must bear uniformly on bedding strips of extruded polystyrene placed along top flange edges.

If additional blocking is needed, special grading details for supporting the panels and extra reinforcing between beam and slab will be considered subsidiary to deck construction.

Care must be taken to ensure proper cleaning of construction debris and consolidation of concrete mortar under the edges of the panels. Bedding strips must be placed at beam flange edges so that adequate space is provided for the mortar to flow a minimum of 1 ½" under the panels as the slab concrete is placed.

To allow the proper amount of mortar to flow between beam and panel, the minimum vertical opening must be at least ½". Roadway cross-slope reduces the opening available for entry of the mortar. Bedding strips varying in thickness across the beam are therefore required.

All reinforcing steel in the cast-in-place slab must be Grade 60. See Table of Reinforcing Steel for size and spacing of reinforcement. Orientation of reinforcement (normal or skewed) must match that shown on the Span Details.

If the top and bottom layer of reinforcing steel is shown on the Span Details to be epoxy coated, then the A, D, E, P, & Z bars must be epoxy coated.

For clear span between U-beams less than or equal to 18", see Permissible Slab Forming Detail on Miscellaneous Slab Detail sheets, UBMS.

Bar Laps, where required, must be as follows:

Uncoated	~ #4	= 1'-5"
	~ #5	= 1'-9"
Epoxy Coated	~ #4	= 2'-1"
	~ #5	= 2'-7"

GENERAL NOTES:

Designed according to AASHTO LRFD Specifications.

Use of Prestressed Concrete Panels is not permitted for horizontally curved steel plate or tub girders. See Span Details for other possible restrictions on their use.

These details are to be used in conjunction with the Span Details and applicable Standard sheets.

Any additional reinforcement or concrete required on this standard is to be considered subsidiary to the bid Item "Reinforced Concrete Slab".

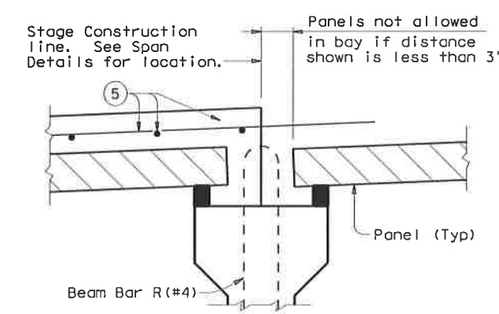

STAGE CONSTRUCTION LIMITATIONS ON PANELS

Showing Prestressed Concrete I-Beams.
(Other Beam Types Similar)

HL93 LOADING — SHEET 1 OF 4

Texas Department of Transportation
Bridge Division

PRESTRESSED CONCRETE PANELS

OPTIONAL DECK DETAILS FOR BEAM SPANS

PCP

FILE: pcpstdel.dgn	DN: TxDOT	CK: TxDOT	DW: TxDOT	CK: TxDOT
©TxDOT April 2006	DISTRICT	FEDERAL AID PROJECT		SHEET 451
REVISIONS	SAT			
08-07: Added I-Girders and added note to WWR splice details.	COUNTY	CONTROL	SECT	JOB	HIGHWAY
	BEXAR	2708	01	022	FM2696

DISCLAIMER:
The use of this standard is governed by the "Texas Engineering Practice Act". No warranty of any kind is made by TxDOT for any purpose whatsoever. TxDOT assumes no responsibility for the conversion of this standard to other formats or for incorrect results or damages resulting from its use.

ACC:
LEVELS

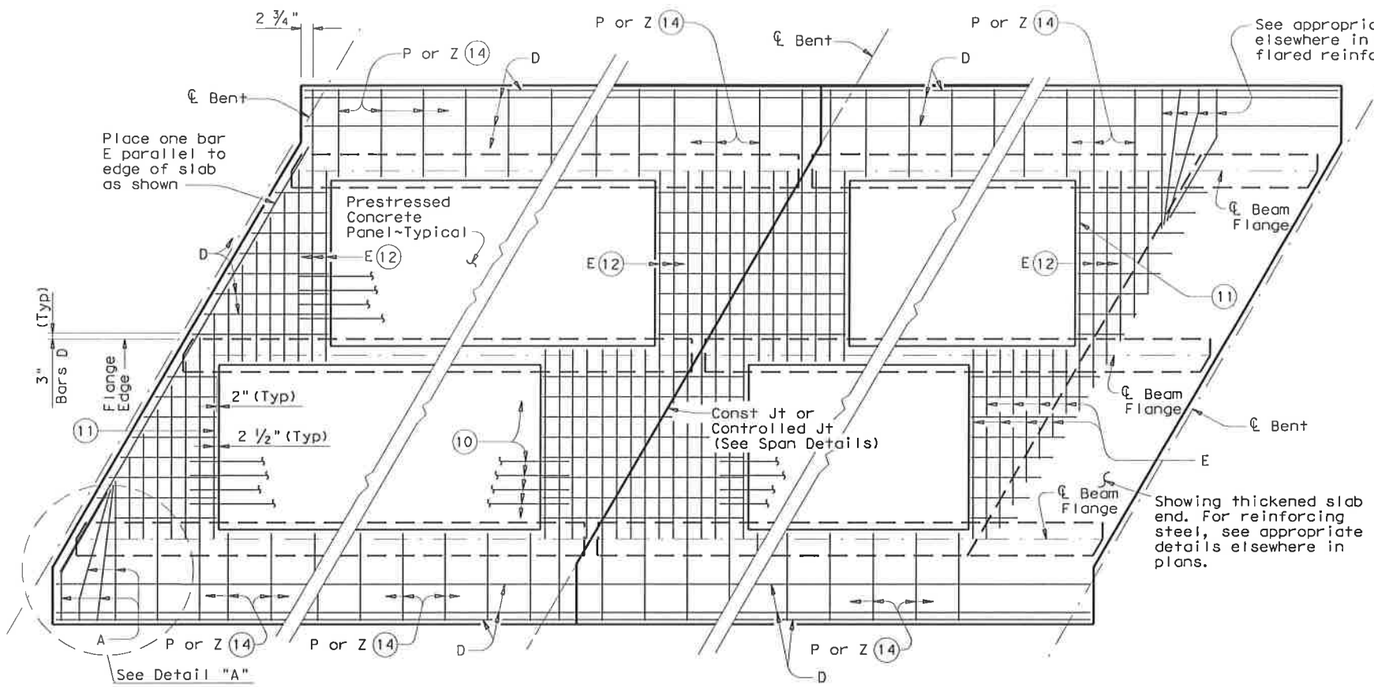

AT ALL SPAN ENDS UNLESS NOTED OTHERWISE

AT INTERIOR BENTS

AT THICKENED END SLABS ON STEEL, CONC I-BEAMS, I-GIRDERS OR U-BEAMS

PLAN OF SLABS WITH NORMAL REINFORCEMENT

(Showing bottom reinforcing steel. See Span Details for top reinforcement steel.)

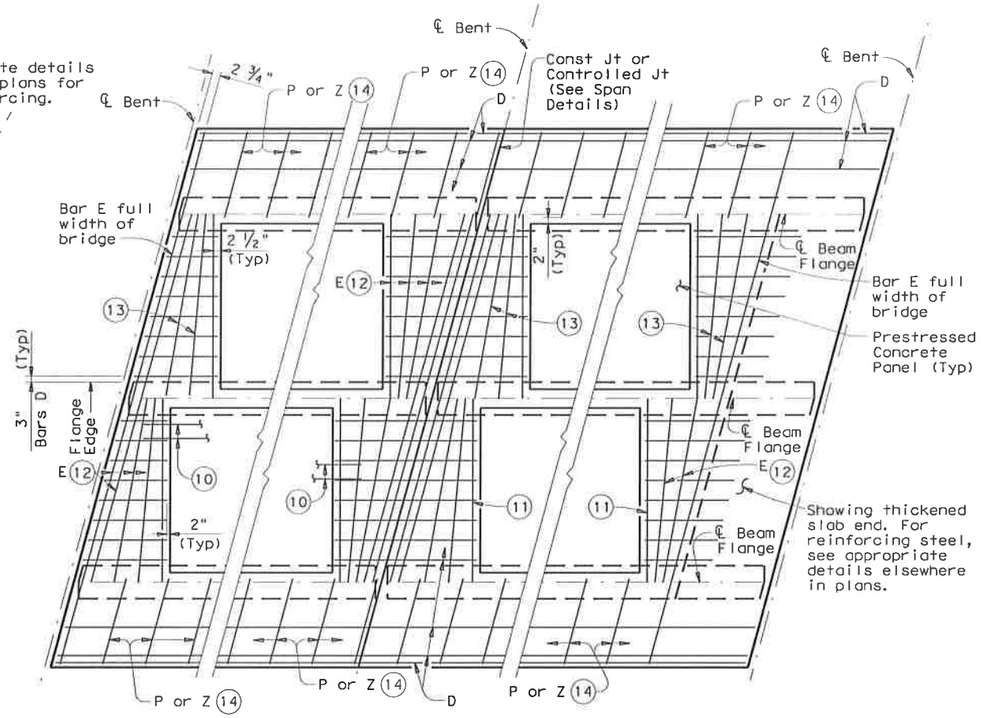

AT ALL SPAN ENDS UNLESS NOTED OTHERWISE

AT INTERIOR BENTS

AT THICKENED END SLABS ON STEEL, CONC I-BEAMS, I-GIRDERS OR U-BEAMS

PLAN OF SLABS WITH SKEWED REINFORCEMENT

(Showing bottom reinforcing steel. See Span Details for top reinforcement steel.)

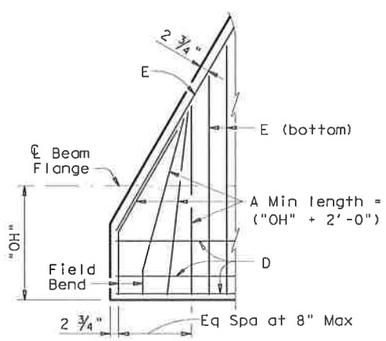

DETAIL "A"

APPROXIMATE QUANTITIES FOR ONE SQUARE FOOT OF SLAB (15)	
Slab Thickness (In.)	Class S Concrete CY
8	0.0123
8 ¼	0.0131
8 ½	0.0139

(For Contractor's information only)

(8) Max Spacing as listed unless otherwise shown.

(10) At connection with cast-in-place slab, extend longitudinal panel reinforcement 1'-0" (+2", -0") past panel end. Alternatively, provide (#3) x 2'-0" dowels at 6" Max spacing and extend dowels 1'-0" past panel end.

(11) Maintain one Bar E(#5) parallel to panel ends (Typ).

(12) Bars E(#5) not continuous over beam flanges must overlap beam flange 6" Min.

(13) Add flared Bars E(#5) (Min Spa = 2", Max Spa = 10") as required at panel ends.

(14) Where possible, Bars E(#5) may be extended into overhangs to replace Bars P(#4). Bars Z(#4) are required for sloped overhangs with U-Beams.

(15) These approximate quantities are for a typical square foot of cast-in-place slab over the PCP. They do not include an allowance for slab overhangs, thickened ends at diaphragms, or the portion between panels over the beams.

TABLE OF REINFORCING STEEL (8)		
BAR	SIZE	Max Spa (in.)
A	#5	~
D	#5	9
E	#5	6
P	#4	18
UP	#4	~
Z	#4	18

HL93 LOADING

SHEET 2 OF 4

Texas Department of Transportation
Bridge Division

PRESTRESSED CONCRETE PANELS

OPTIONAL DECK DETAILS FOR BEAM SPANS

PCP

FILE: pcpsidel.dgn	DN: TxDOT	CK: TxDOT	DW: TxDOT	CK: TxDOT
©TxDOT April 2006	DISTRICT	FEDERAL AID PROJECT		SHEET 652
REVISIONS 08-07: Added I-Girders and added note to WWR splice details.	SAT			
	COUNTY	CONTROL	SECT	JOB	HIGHWAY
	BEXAR	2708	01	022	FM2696

DISCLAIMER:
The use of this standard is governed by the "Texas Engineering Practice Act". No warranty of any kind is made by TxDOT for any purpose whatsoever. TxDOT assumes no responsibility for the conversion of this standard to other formats or for incorrect results or damages resulting from its use.

ACC:

LEVELS D

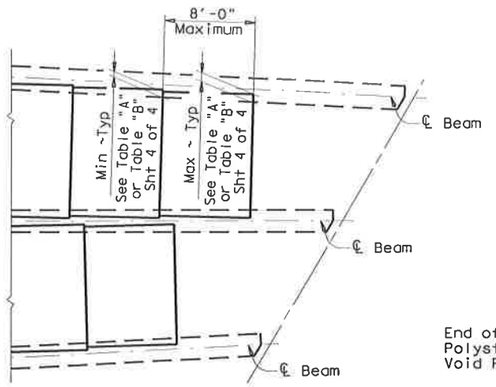

AT ENDS OF FLARED I-BEAMS OR I-GIRDERS
(Showing thickened slab end condition)

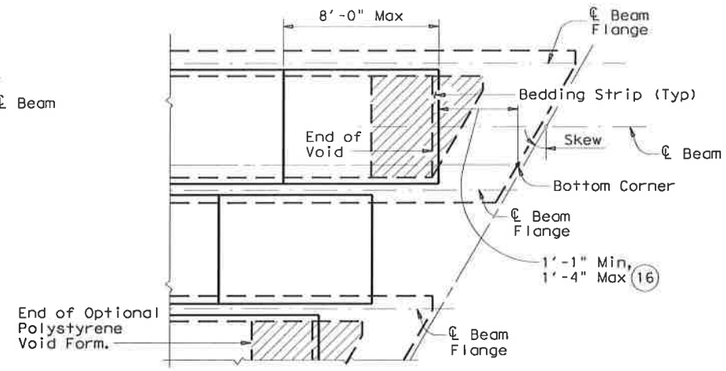

AT ENDS OF CONC U-BEAMS

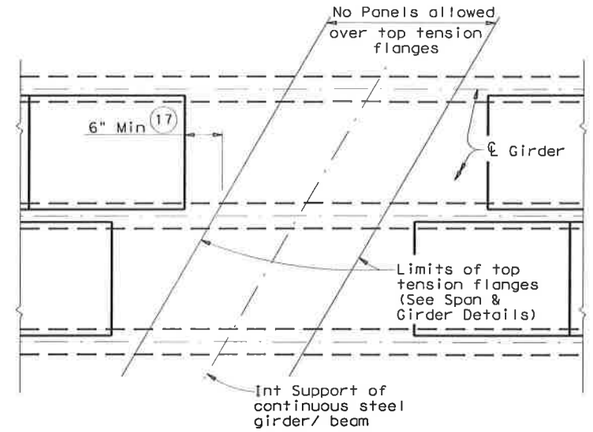

AT INT SUPPORTS OF CONTINUOUS STEEL GIRDERS

PART PLANS OF PANEL PLACEMENT

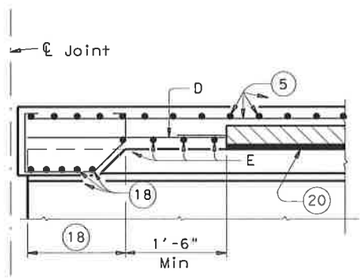

AT THICKENED SLAB ENDS FOR PRESTR CONC U-BMS

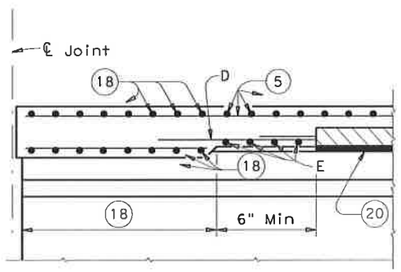

AT THICKENED SLAB ENDS FOR PRESTR CONC I-BMS AND STEEL BMS

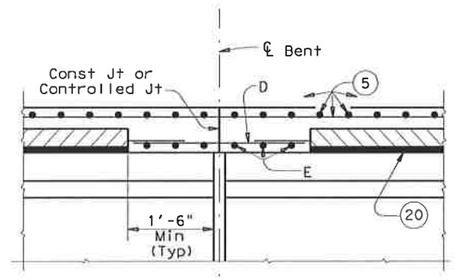

AT SLAB CONTINUOUS OVER CONVENTIONAL INTERIOR BENTS FOR ALL SIMPLE SPAN BMS

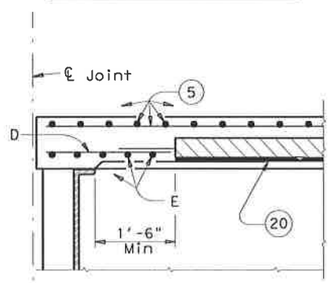

AT CONVENTIONAL END DIAPHRAGMS FOR STEEL BMS

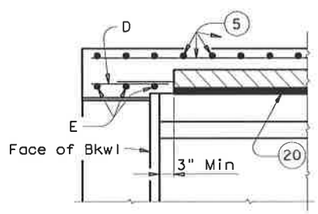

AT SLAB OVER ABUTMENT BACKWALL FOR ALL BMS

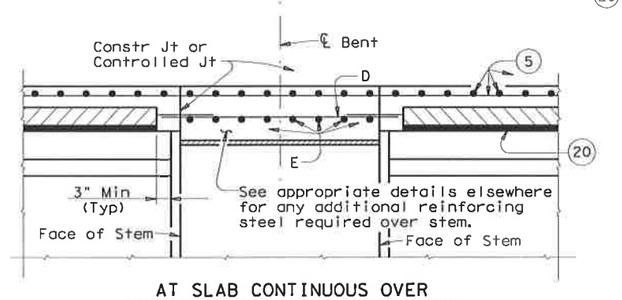

AT SLAB CONTINUOUS OVER INVERTED-T BENTS FOR ALL BMS

ELEVATIONS AT BEAM ENDS

(5) See Span Details for top slab reinforcement and clear cover. Longitudinal top slab reinforcement may rest on top of prestressed concrete panels if necessary to maintain clear cover.

(8) Max Spacing as listed unless otherwise shown.

(16) For panel placement at ends of dapped end U-Beams, with Skews under 30°, use 2'-9" ± 1" or with Skews 30° thru 45°, use 3'-3" ± 1".

(17) Location of concrete placement sequence boundaries and bolted field splices should be considered by the contractor in determining panel limits.

(18) See appropriate thickened slab end details for reinforcing and limits of thickened slab end.

(19) When flange thickness differs or flange cover plates are used the Contractor must compensate by using different thickness bedding strips to assure that the tops of Precast Panels are within ¼" of alignment. See Normal Grading Detail for additional notes.

(20) Butt adjacent bedding strips together with adhesive. Cut v-notches, approx ¼" deep, in the top of the bedding strips at 8' o.c..

TABLE OF REINFORCING STEEL (8)		
BAR	SIZE	Max Spa (in.)
A	#5	~
D	#5	9
E	#5	6
P	#4	18
UP	#4	~
Z	#4	18

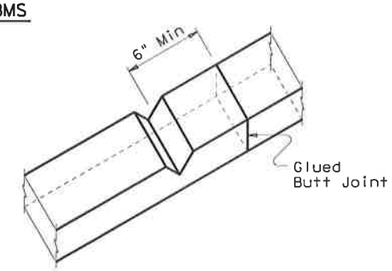

EXAMPLE OF BEDDING STRIPS (20) BUTTED TOGETHER WITH V-NOTCH

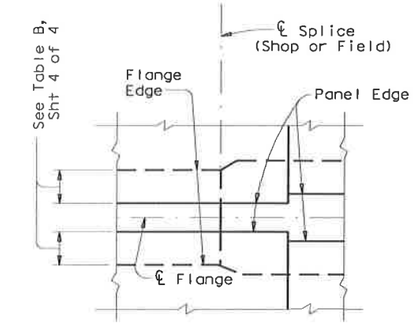

PLAN AT SPLICE
(Showing Steel Bms with flange width transition)

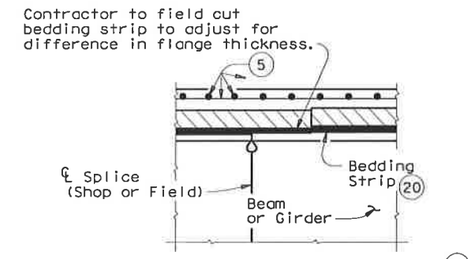

ELEVATION AT SPLICE (19)
(Showing Steel Bms with different flange thickness)

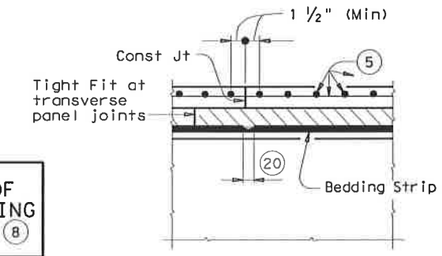

TRANSVERSE PANEL JOINTS AND SLAB CONST JOINTS

HL93 LOADING

SHEET 3 OF 4

Texas Department of Transportation
Bridge Division

PRESTRESSED CONCRETE PANELS

OPTIONAL DECK DETAILS FOR BEAM SPANS

PCP

FILE: pcpstdel.dgn	DN: TxDOT	CK: TxDOT	DW: TxDOT	CK: TxDOT
© TxDOT April 2006	DISTRICT	FEDERAL AID PROJECT		SHEET 63
REVISIONS 08-07: Added I-Girders and added note to NWR splice detail.	SAT			
	COUNTY	CONTROL	SECT	JOB	HIGHWAY
	BEXAR	2708	01	022	FM2696

DISCLAIMER:
The use of this standard is governed by the "Texas Engineering Practice Act". No warranty of any kind is made by TxDOT for any purpose whatsoever. TxDOT assumes no responsibility for the conversion of this standard to other formats or for incorrect results or damages resulting from its use.

ACC:

LEVELS D

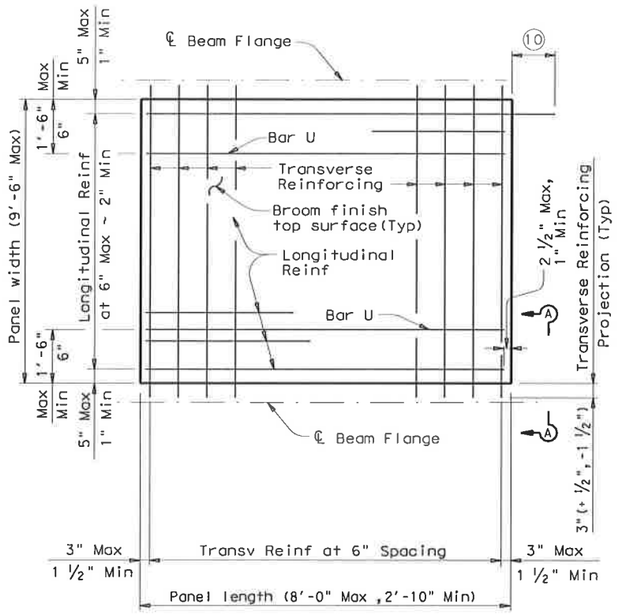

TYPICAL PANEL PLAN

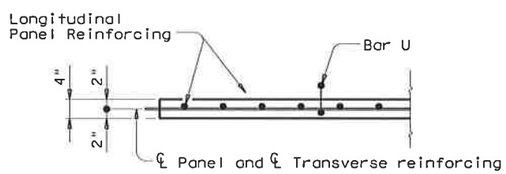

SECTION A-A

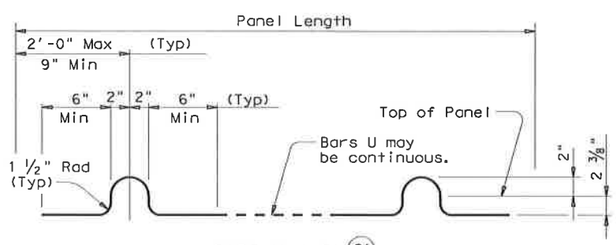

BARS U (#3) (21)

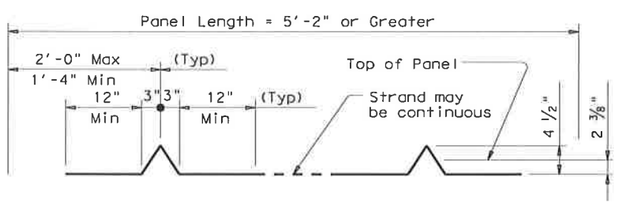

OPTIONAL STRAND FOR BARS U (22)

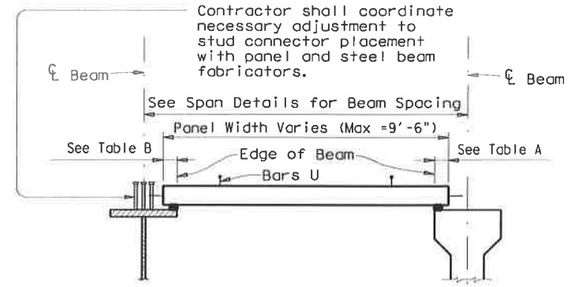

STEEL BEAMS

PRESTRESSED CONCRETE I-BEAMS OR I GIRDERS

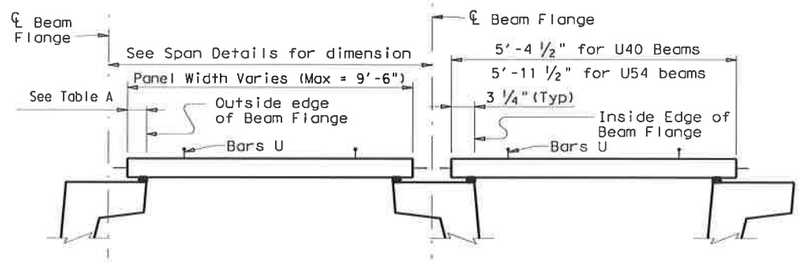

PRESTRESSED CONCRETE U-BEAMS

TYPICAL SECTIONS FOR DETERMINING PANEL WIDTH

(10) At connection with cast-in-place slab, extend longitudinal panel reinforcement 1'-0" (+2", -0") past panel end. Alternatively, provide (#3) x 2'-0" dowels at 6" Max Spacing and extend dowels 1'-0" past panel end.

(21) Four loops required per panel.

(22) Four loops required per panel. ⅜" or ½" strands may be used.

(23) Normal dimensions must be used on spans with parallel beams. Maximum and Minimum dimensions apply only to spans with flared beams.

(24) See Normal Grading Detail on Sht 1 of 4 for lap requirements and bedding strip dimensions. Some laps shown in tables cannot utilize all bedding strip widths.

(25) One Splice allowed per panel.

TABLE A (23)(24)

Beam Type	Normal (In.)	Min (In.)	Max (In.)
A	3	2 ½	3 ½
B	3	2 ½	3 ½
C	4	3	4 ½
IV	6	4	7 ½
VI	6 ½	4 ½	8 ½
U40	5 ½	5 ½	7
U54	5 ½	5 ½	7
Tx28-70	6	4	7 ½

TABLE B (23)(24)

Top Flange Width	Normal (In.)	Min (In.)	Max (In.)
11" to 12"	2 ¾	2 ½	2 ¾
Over 12" to 15"	3 ¼	3	3 ¼
Over 15" to 18"	4	3	4 ¾
Over 18"	5	3 ½	6 ¼

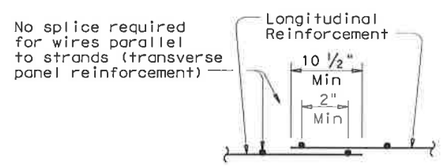

WELDED WIRE REINFORCEMENT (WWR) SPLICE DETAIL (25)

FABRICATION NOTES:

All concrete for panels is to be Class H. Use Class H (HPC) concrete for panels if required elsewhere in plans. Release strength f'ci=4000 psi. Minimum 28 day strength f'c=5000 psi.

Remove laitance from top panel surface.

A minimum of 90 percent of the top surface area must have the required broom finish.

Shop drawings for the fabrication of panels will not require the Engineer's approval if fabrication is in accordance with the details shown on this standard.

A panel layout which identifies location of each panel must be developed by the fabricator. Permanently mark each panel in accordance with the panel layout. A copy of the layout is to be provided to the Engineer.

TRANSVERSE PANEL REINFORCEMENT:

For panel widths over 5', use ⅜" or ½" Dia (270k) prestressing strands with an initial tension of 16.1 kips per strand.

For panel widths over 3'-6" up to and including 5', use ⅜" or ½" Dia (270k) prestressing strands with an initial tension of 16.1 kip per strand. Optionally, #4 Grade 60 reinforcing bars may be used in lieu of prestressed strands.

For panel widths up to 3'-6", use #4 Grade 60 reinforcing bars (prestressed strands are not allowed).

Place transverse panel reinforcement at panel centroid and space at 6" Max.

LONGITUDINAL PANEL REINFORCEMENT:

Any of the following options may be used for longitudinal panel reinforcement:

1. (#3) Grade 60 reinforcing steel at 6" Max Spacing. No splices allowed.
2. ⅜" Dia prestressing strands at 4 ½" Max Spacing (unstressed). No splices allowed.
3. ½" Dia prestressing strands at 6" Max Spacing (unstressed). No splices allowed.
4. Deformed Welded Wire Reinforcement (WWR) (ASTM A497) providing 0.22 sq in per foot of panel width. Wires larger than D11 not permitted. Provide transverse wires to ensure proper handling of reinforcing. One splice per panel is allowed. See WWR Splice Detail.

No combination of longitudinal reinforcement options in a panel is allowed.

Place longitudinal panel reinforcement above transverse panel reinforcement.

DISCLAIMER:
The use of this standard is governed by the "Texas Engineering Practice Act". No warranty of any kind is made by TxDOT for any purpose whatsoever. TxDOT assumes no responsibility for the conversion of this standard to other formats or for incorrect results or damages resulting from its use.

HL93 LOADING — SHEET 4 OF 4

Texas Department of Transportation
Bridge Division

PRESTRESSED CONCRETE PANELS

OPTIONAL DECK DETAILS FOR BEAM SPANS

PCP

FILE: pcpstdel.dgn	DN: TxDOT	CK: TxDOT	DW: TxDOT	CK: TxDOT
©TxDOT April 2006	DISTRICT	FEDERAL AID PROJECT		SHEET 64
REVISIONS 08-07: Added I-Girders and added note to WWR splice detail.	SAT			
	COUNTY	CONTROL	SECT	JOB	HIGHWAY
	BEXAR	2708	01	022	FM2696

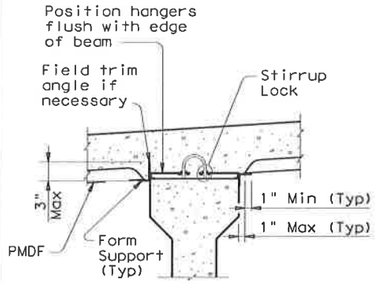

PRESTR CONC I-BEAMS AND I-GIRDERS WITH STIRRUP LOCKS

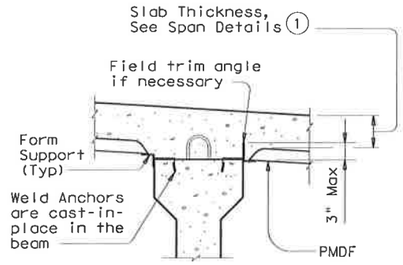

PRESTR CONC I-BEAMS AND I-GIRDERS WITH WELD ANCHORS

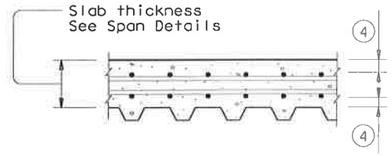

TYP LONGITUDINAL SLAB SECTION

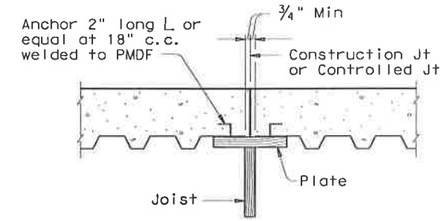

Note: In spans where PMD forms are used, timber forms must be used at construction joints. Adequate provision must be made to support edge of metal form and to provide anchorage of metal form to slab concrete where joined to wood forms.

SECTION THRU CONSTRUCTION JOINT

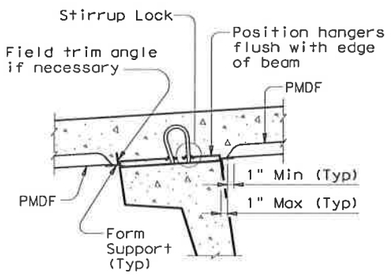

U-BEAMS WITH STIRRUP LOCKS

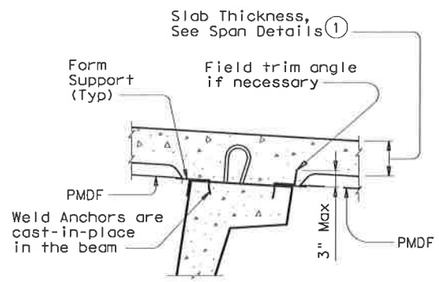

U-BEAMS WITH WELD ANCHORS

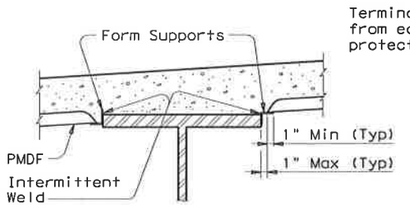

STEEL BEAMS AT COMPRESSION FLANGES

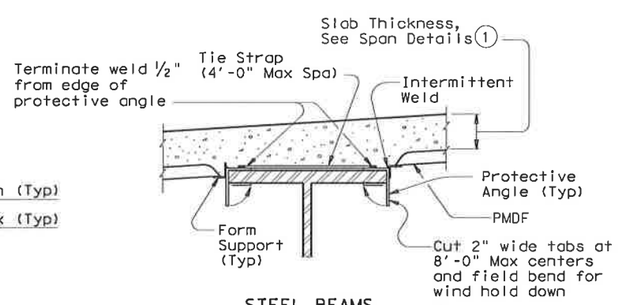

STEEL BEAMS AT TENSION FLANGES (2)

TYPICAL TRANSVERSE SECTIONS

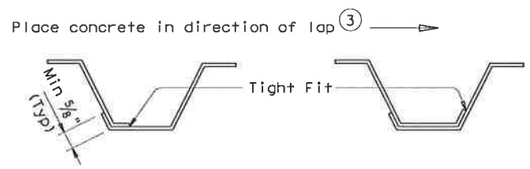

SIDE LAP DETAILS

(1) Slab thickness minus ⅝" if corrugations match reinforcing bars.

(2) Welding of form supports to tension flanges will not be permitted.
Other methods of providing wind hold down resistance for PMDF in tension flange zones will be considered. At least one layer of sheet metal must be provided between the flange and the weld joint.

(3) The direction of concrete placement will be such that the upper layer of the form overlap is loaded first.

(4) See Span details for cover requirements.

FOR PRESTR CONC U-BEAM BRIDGES:
Size, spacing, and orientation of bottom mat of slab reinforcement must match the top mat of reinforcing shown on the span details except all bottom mat bars are to be #5.

DESIGN NOTES:

As a minimum, PMDF and support angles must be designed for the dead load of the form, reinforcement and concrete plus 50 psf for construction loads. Flexural stresses due to these design loads must not exceed 75 percent of the yield strength of the steel. Allowable stress for weld metal must be 12,400 psi.

Maximum deflection under the weight of forms, reinforcement and concrete or 120 psf, whichever is greater, shall not exceed the following:

1/180 of the form design span, but not more than 0.50", for design spans of 10' or less.

1/240 of the form design span, but not more than 0.75", for design spans greater than 10'.

The form design span must not be less than the clear distance between beam flanges, measured parallel to the form flutes, minus 2".

CONSTRUCTION NOTES:

Form sheets must not be permitted to rest directly on the top of beam flanges. Form sheets must be securely fastened to form supports and must have a minimum bearing length of one inch at each end. Form supports must be placed in direct contact with beam flanges.

All attachments must be made by permissible welds, screws, bolts, clips or other means shown on the the forming plans. All sheet metal assembly screws must be installed with torque-limiting devices to prevent stripping. Only welds or bolts must be used to support vertical loads.

Welding and welds must be in accordance with the provisions of Item 448, "Structural Field Welding", pertaining to fillet welds. All welds must be made by a qualified welder in accordance with Item 448.

All permanently exposed form metal, where the galvanized coating has been damaged, must be thoroughly cleaned and repaired in accordance with Item 445, "Galvanizing". Minor heat discoloration in areas of welds need not be touched up.

Flutes must line up uniformly across the entire width of the structure where main reinforcing steel is located in the flute.

Construction joints will not be permitted unless shown on the plans. The location of and forming details for any construction joint used must be shown on the forming plans. Forms below a construction joint must be removed after curing of the slab.

A sequence for uniform vibration of concrete must be approved by the Engineer prior to concrete placement. Attention must be given to prevent damage to the forms, yet provide proper vibration to prevent voids or honeycomb in the flutes and at headers and/or construction joints.

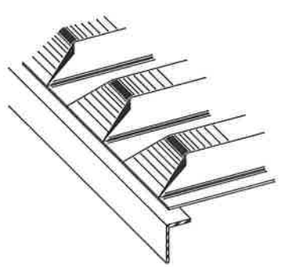

PRECLOSED

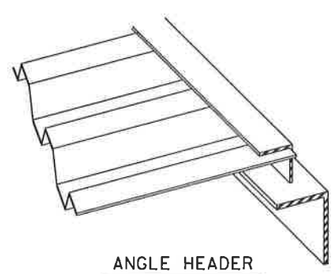

ANGLE HEADER

NOTE: This type is to be used for skewed ends only.

TYPES OF END CLOSURES

GENERAL NOTES:

Steel for Permanent Metal Deck Forms (PMDF) and support angles shall conform to ASTM A653, Structural Steel (SS), with coating designation G165. Steel must have a minimum yield strength of 33 ksi. Minimum thickness of PMDF is 20 gage and that of support angles and protective angles is 12 gage.

Submit two copies of forming plans for PMDF to the Engineer. These plans must show all essential details of proposed form sheets, closures, fasteners, supports, connectors, special conditions and size and location of welds. These plans must clearly show areas of tension flanges for steel beams and provisions for protecting the tension flanges from welding notch effects by inclusion of separating sheet metal or other positive method. These plans must be designed, signed, and sealed by a licensed professional engineer. Department approval of these plans is not required, but the Department reserves the right to require modifications to the plans. The Contractor is responsible for the adequacy of these plans.

The details and notes shown on this standard are to be used as a guide in preparation of the forming plans.

All material, labor, tools and incidentals necessary to form a bridge deck with Permanent Metal Deck Forms is considered subsidiary to Item 422, "Reinforced Concrete Slab".

DISCLAIMER:
The use of this standard is governed by the "Texas Engineering Practice Act". No warranty of any kind is made by TxDOT for any purpose whatsoever. TxDOT assumes no responsibility for the conversion of this standard to other formats or for incorrect results or damages resulting from its use.

PATH:

LEVELS DI:

Texas Department of Transportation
Bridge Division

PERMANENT METAL DECK FORMS

PMDF

FILE: pmdfstel.dgn	DN: TxDOT	CK: TxDOT	DW: TxDOT	CK: TxDOT	
© TxDOT April 2006	DISTRICT	FEDERAL AID PROJECT			SHEET
REVISIONS 08-2007: Added I-Girders.	SAT				65
	COUNTY	CONTROL	SECT	JOB	HIGHWAY
	BEXAR	2708	01	022	FM2696

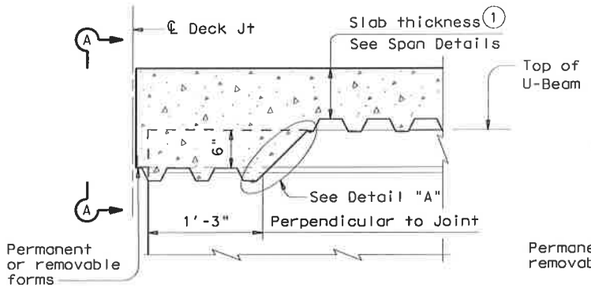

AT THICKENED SLAB END FOR U-BEAMS

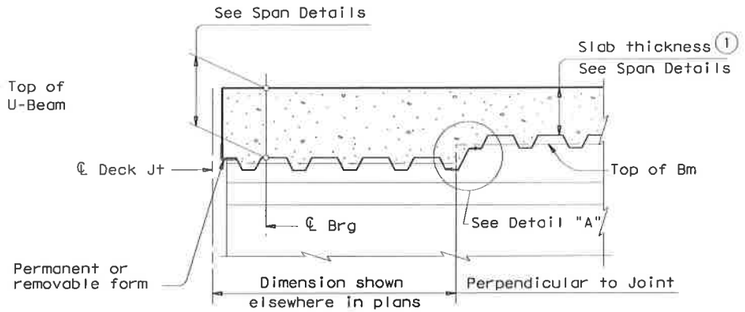

AT THICKENED SLAB END FOR PRESTRESSED I-BEAMS, I-GIRDERS AND STEEL BEAMS

Showing I-Beam block-out. No block-out for I-Girders or Steel Beams.

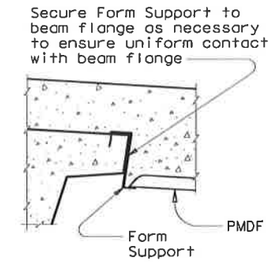

SECTION A-A

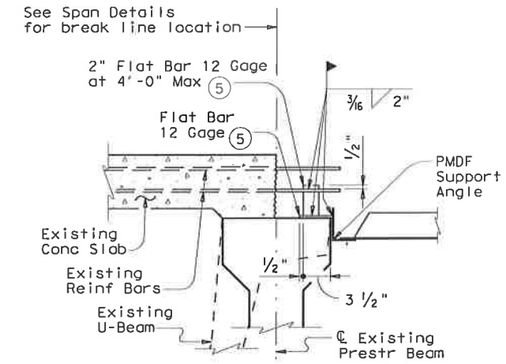

SHOWING PRESTRESSED CONCRETE I-BEAMS, I-GIRDERS AND U-BEAMS

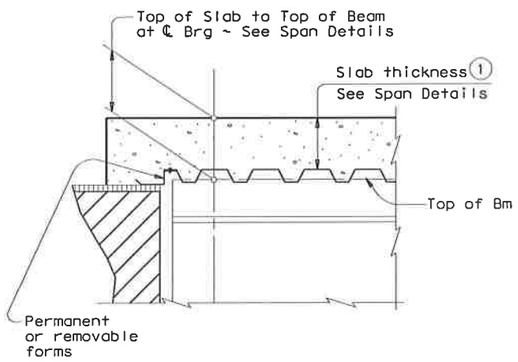

AT SLAB OVER ABUT BKWL OR INV TEE STEM FOR CONC BEAMS WITHOUT THICKENED SLAB END

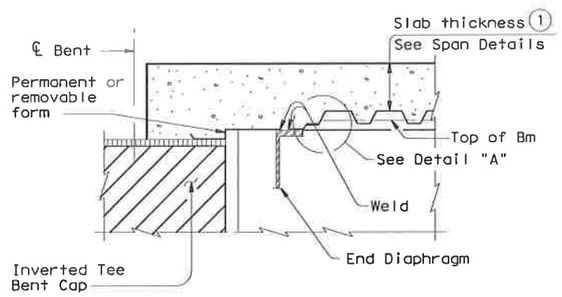

AT SLAB OVER INV TEE STEM FOR STEEL BEAMS WITHOUT THICKENED SLAB END

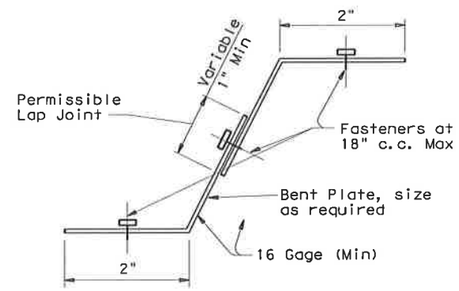

DETAIL "A"

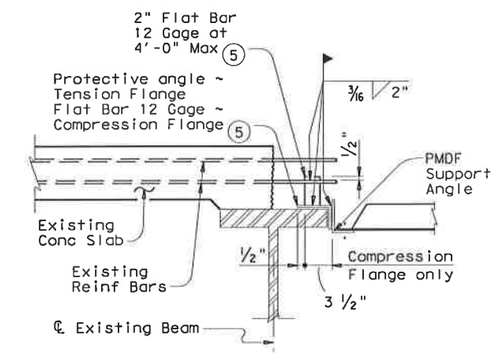

SHOWING STEEL BEAMS

WIDENING DETAILS

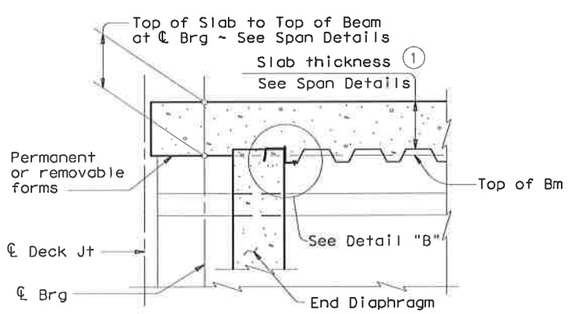

AT CONC END DIAPHRAGM FOR PRESTRESSED I-BEAMS AND STEEL BEAMS

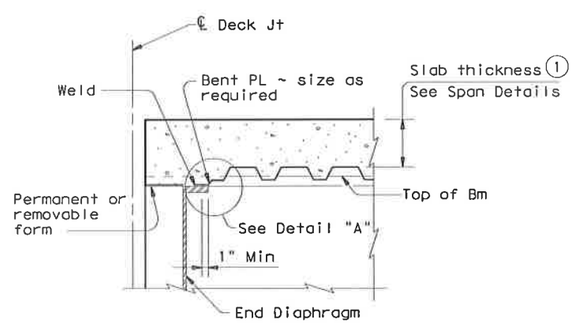

AT END DIAPHRAGM FOR STEEL BEAMS WITHOUT THICKENED SLAB END

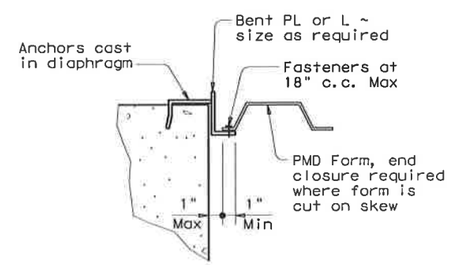

DETAIL "B"

(1) Slab thickness minus 5/8" if corrugations match reinforcing bars

(5) Minimum yield stress of 12 Gage bars shall be 40 ksi

DETAILS AT ENDS OF BEAMS

DISCLAIMER:
The use of this standard is governed by the "Texas Engineering Practice Act". No warranty of any kind is made by TxDOT for any purpose whatsoever. TxDOT assumes no responsibility for the conversion of this standard to other formats or for incorrect results or damages resulting from its use.

PATH:

LEVELS DIE

SHEET 2 OF 2

Texas Department of Transportation
Bridge Division

PERMANENT METAL DECK FORMS

PMDF

FILE: pmdfstel.dgn	DN: TxDOT	CK: TxDOT	DW: TxDOT	CK: TxDOT	
© TxDOT April 2006	DISTRICT	FEDERAL AID PROJECT			SHEET 6/6
REVISIONS 08-2007: Added I-Girders.	SAT				
	COUNTY		CONTROL	SECT	JOB	HIGHWAY
	BEXAR		2708	01	022	FM2696

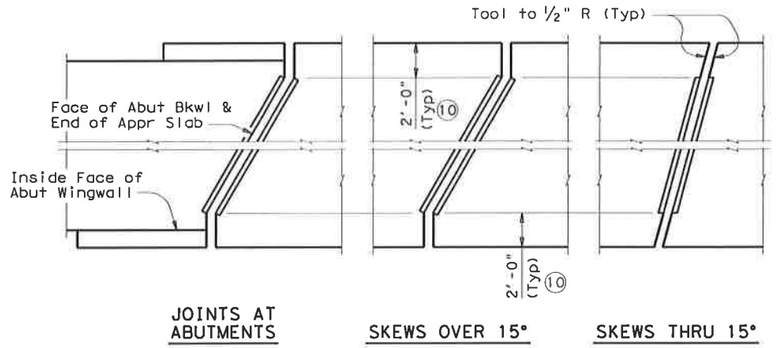

PLANS OF ARMOR JOINT PLATES

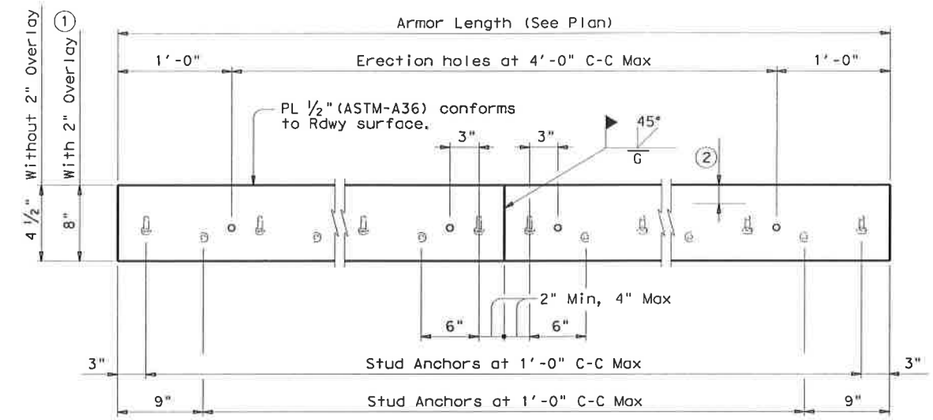

ELEVATION OF BASIC ARMOR PLATE

WEIGHTS P.L.F. FOR ONE ARMOR JOINT (2 PLATES)	
WITHOUT OVERLAY	17.80 Lb
WITH 2" OVERLAY (1)	29.70 Lb

(1) Adjust 8" plate height for overlay thicknesses other than the 2" shown. Adjust values by 1.70 Lbs for each ½" variation in thickness.

(2) Do not paint top 1 ½" of plate if using sealed armor joint.

(3) Set top of backer rod 1" below top of armor plate. Backer rod must be compatible with joint sealant. Use of multiple pieces to create a backer rod cross section is not permitted. Top of backer rod must be convex as shown.

(4) Blast clean entire contact area between sealant and plate (SSPC-SP10) before installing sealant. Light brush blast and thoroughly clean all dust and debris from concrete surfaces in contact with joint sealant before application of Silicone Seal.

(5) Use Class 7 joint sealant that conforms to DMS-6310.

(6) Sealant will be placed while ambient temperature is between 55°F and 80°F and is rising.

(7) Armor Joint does not include joint sealant or backer rod.

(8) Armor Joint (Sealed) includes Class 7 joint sealant and backer rod.

(9) Form vertical leg of seal as per the Manufacturer's recommendations. Use Class 4 joint sealant if Class 7 cannot be installed correctly. Install according to Manufacturer's recommendations.

(10) Unless shown otherwise, terminate armor plate at slab break point if break is more than 2' from slab edge.

(11) 2'-0" Perpendicular to Edge of Slab unless noted otherwise.

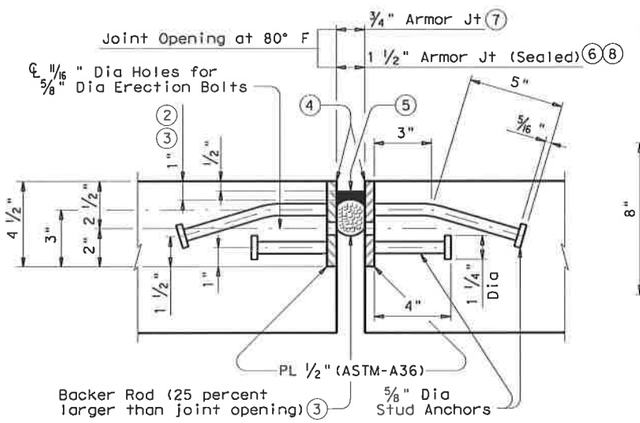

SHOWN WITHOUT 2" OVERLAY AT JOINT LOCATION

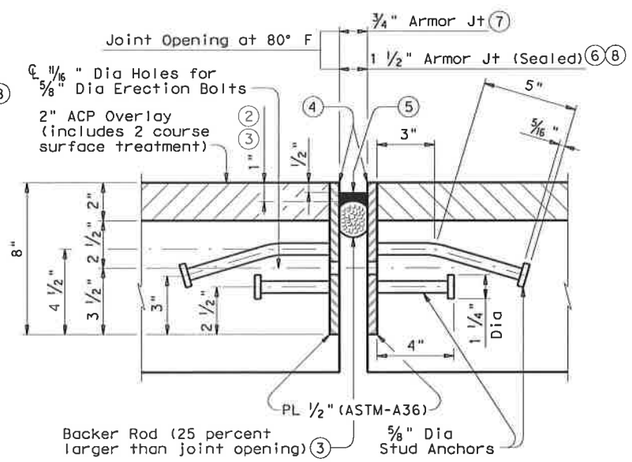

SHOWN WITH 2" OVERLAY AT JOINT LOCATION (1)

ARMOR JOINT SECTIONS

Showing Armor Joint (Sealed)

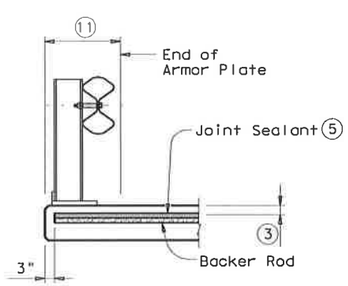

SHOWN AT STEEL RAIL

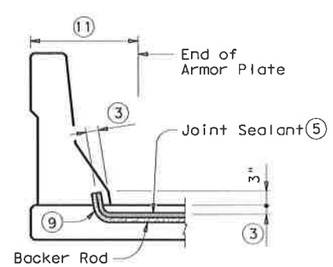

SHOWN AT BARRIER RAIL

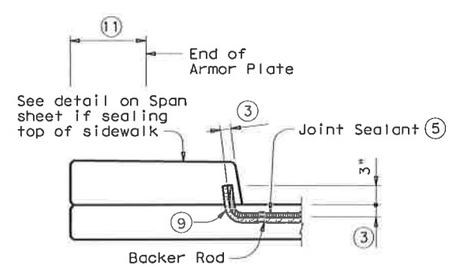

SHOWN AT CURB

JOINT SEALANT TERMINATION DETAILS

Armor Joint (Sealed) only. Armor Plate is not shown for clarity.

GENERAL NOTES:

Provide Armor Joints at locations indicated on the Bridge Layout. Provide the seal when "Armor Joint (Sealed)" is noted on the Bridge Layout.

These joint details accommodate a joint movement range of 1 ⅜" (¾" opening movement and ⅝" closure movement).

Ship armor joints in convenient lengths of 10'-0" Min and 24'-0" Max unless necessary for stage construction or widenings. One shop splice is permitted in each shipping length provided no piece is less than 2'-0" long and sufficient studs are added to limit the stud to shop splice distance to 2" Min and 4" Max.

Use groove welds for all shop and field butt splices. Grind smooth areas in contact with seal. Make all necessary field splice joint preparations in the shop.

Weld studs in accordance with AWS D1.1. Punch erection holes to line up in final position of Armor Joint. Match mark corresponding plate sections and bolt together for shipment.

Paint portions of plate not in contact with concrete with the primer specified for System II paint.

Secure armor joints in position and place to proper grade and alignment by welding braces to adjacent reinforcing steel. Cost of furnishing and installing temporary bracing is subsidiary to the pertinent bid item.

After bracing and welding armor plates, remove the erection bolts and spacers and seal the erection holes before placing slab concrete.

Shop drawings for the fabrication of Armor Joints will not require the Engineer's approval if fabrication is in accordance with the details shown on this standard.

An Armor Joint Layout which identifies location of each steel section shall be developed by the fabricator. Permanently mark each steel section in accordance with the Armor Joint Layout. A copy of the Armor Joint layout is to be provided to the Engineer.

Payment for Armor Joint with or wthout Seal is based on length of Armor Plate.

DISCLAIMER:
The use of this standard is governed by the "Texas Engineering Practice Act". No warranty of any kind is made by TxDOT for any purpose whatsoever. TxDOT assumes no responsibility for the conversion of this standard to other formats or for incorrect results or damages resulting from its use.

PATH:

LEVELS DIS

Texas Department of Transportation
Bridge Division

ARMOR JOINT DETAILS

AJ

FILE: ajstde01.dgn	DN: TxDOT	CK: TxDOT	DW: TxDOT	CK: TxDOT
© TxDOT April 2006	DISTRICT	FEDERAL AID PROJECT		SHEET
REVISIONS	SAT			657

COUNTY	CONTROL	SECT	JOB	HIGHWAY
BEXAR	2708	01	022	FM2696

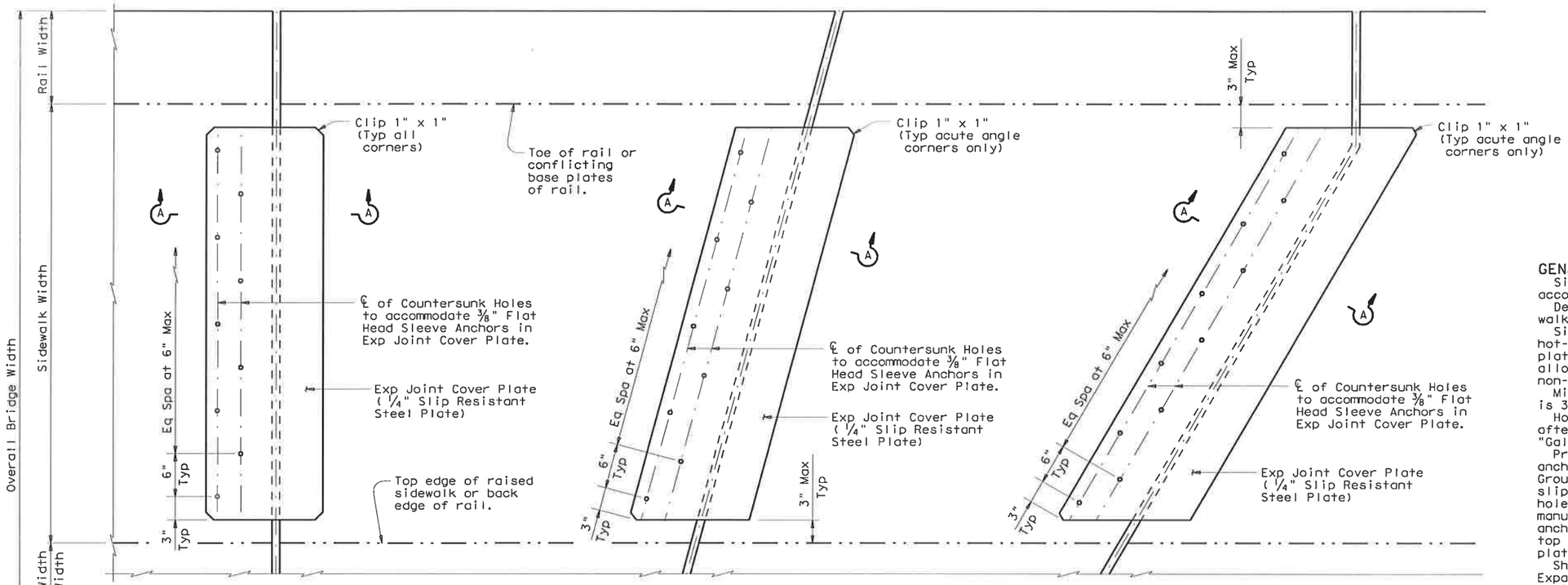

NO SKEW

SKEW WITHOUT SLAB BREAKBACK

SKEW WITH SLAB BREAKBACK

PLAN

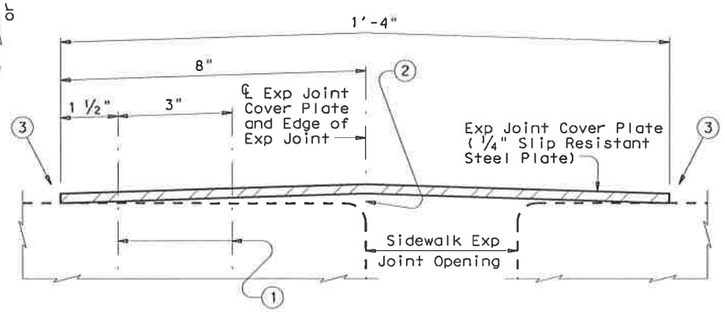

SHOWING LEVEL EXP JOINT

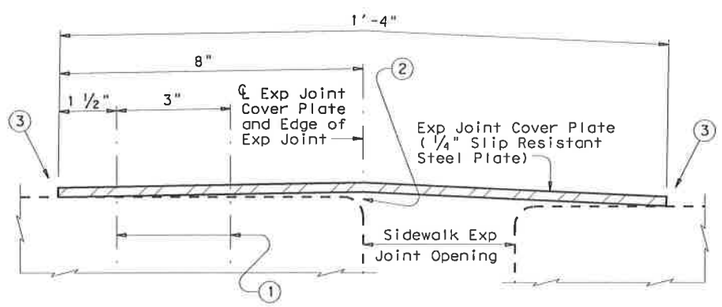

SHOWING UNLEVEL EXP JOINT

(Install Sleeve Anchors on high side of Exp Joint)

SECTION A-A

1. ℄ 3/8" x 2 1/2" Min, Flat Head Sleeve Anchors, Stainless Steel. Countersink Flat Head Sleeve Anchors in 1/4" Slip Resistant Steel Plate.
2. It is not necessary to remove plate crown provided the plate is firmly secured to the sidewalk.
3. Transverse edges must be in contact with sidewalk surface after installation.

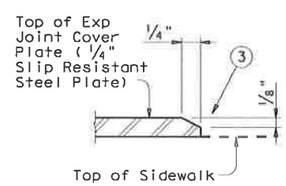

EXP JOINT COVER PLATE BEVEL DETAIL

Bevel all plate edges as shown.

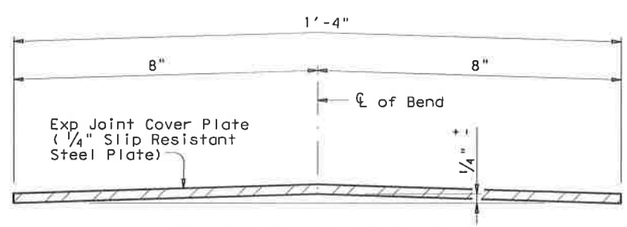

BENDING DIAGRAM OF EXP JOINT COVER PLATE

APPROVED SLIP RESISTANT PLATE	
Product	Manufacturer Website
Mebac® #2, Steel	www.ikgindustries.com
Algrip™, Steel	www.algrip.com
SlipNOT® Grade 2, Steel	www.slipnot.com

GENERAL NOTES:

Sidewalk expansion joint cover plates can only accommodate up to a 7" maximum expansion joint.

Details provided are applicable to concrete walkway surfaces only.

Sidewalk expansion joint cover plates must be hot-dipped galvanized 1/4" slip resistant steel plate. Checker plate or diamond plate is not allowed nor are slip resistant tapes, films and non-metallic coatings.

Minimum required yield strength of steel plate is 36 ksi.

Hot-dip galvanize slip resistant steel plate after fabrication in accordance with Item 445, "Galvanizing".

Provide stainless steel flat head sleeve anchors meeting the requirements of ASTM F 593, Group I, Alloy 304. Countersink holes in slip-resistant plate for sleeve anchors. Drill holes in sidewalk as per sleeve anchor manufacturer's recommendations. Install sleeve anchors flush with, or slightly recessed below, top surface of sidewalk expansion joint cover plate.

Shop drawings for the fabrication of Sidewalk Expansion Joint Cover Plate will not require the Engineer's approval if fabrication is in accordance with the details shown on this standard.

A Bridge Sidewalk Expansion Joint Cover Plate Layout which identifies location side of sleeve anchors and orientation of all cover plate sections will be developed by the fabricator. Mark each steel section in accordance with the Bridge Sidewalk Expansion Joint Cover Plate Layout. A copy of the Bridge Sidewalk Expansion Joint Cover Plate Layout is to be provided to the Engineer.

Payment for sidewalk expansion joint cover plates will be by the pound of "Structural Steel (Misc)" as per Item 442, "Metal for Structures".

Estimated weight of one sidewalk expansion joint cover plate is 14 plf.

DISCLAIMER:
The use of this standard is governed by the "Texas Engineering Practice Act". No warranty of any kind is made by TxDOT for any purpose whatsoever. TxDOT assumes no responsibility for the conversion of this standard to other formats or for incorrect results or damages resulting from its use.

ACC:
J
LEVELS D
1

Texas Department of Transportation
Bridge Division

BRIDGE SIDEWALK EXPANSION JOINT COVER PLATE (ALL SKEWS)

BS-EJCP

FILE: bsejstel.dgn	DN: TxDOT	CK: TxDOT	DW: TxDOT	CK: TxDOT	
© TxDOT April 2006	DISTRICT	FEDERAL AID PROJECT			SHEET 458
REVISIONS	SAT				
	COUNTY		CONTROL	SECT	JOB	HIGHWAY
	BEXAR		2708	01	022	FM2696

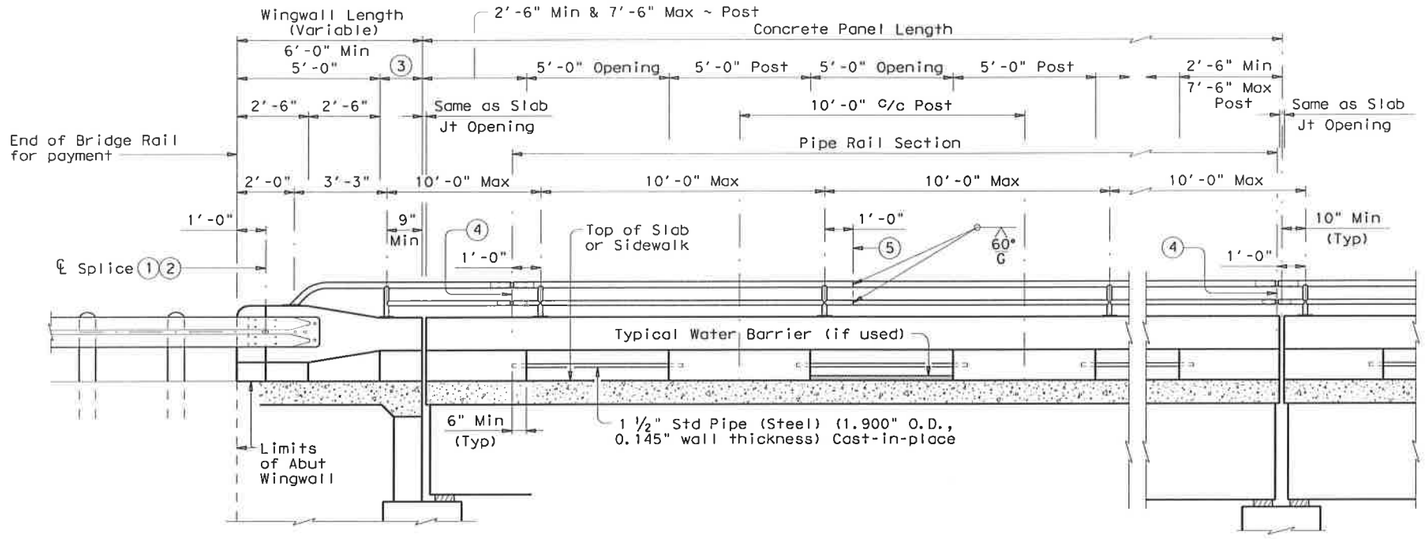

AT ABUTMENT BENTS
Showing TL-2 Transition

AT SLAB EXP JOINTS

RAIL DATA FOR HORIZONTAL CURVES

	RADIUS TO FACE OF RAIL	MAX CHORD LENGTH	CONSTRUCT OR FABRICATE
Pipe Rail	Over 2800'	29'-0"	Straight rail sections
	Over 1400' thru 2800'	14'-6"	To required radius (10) or to chords shown
	Over 700' thru 1400'	7'-3"	
	Thru 700'	Zero	To required radius (10)

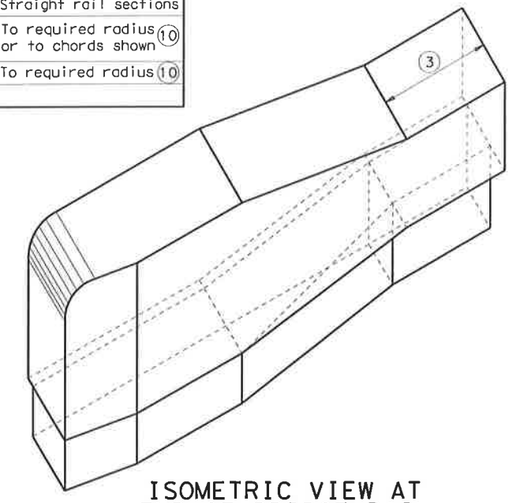

ISOMETRIC VIEW AT END OF BRIDGE RAIL

ROADWAY ELEVATION OF RAIL

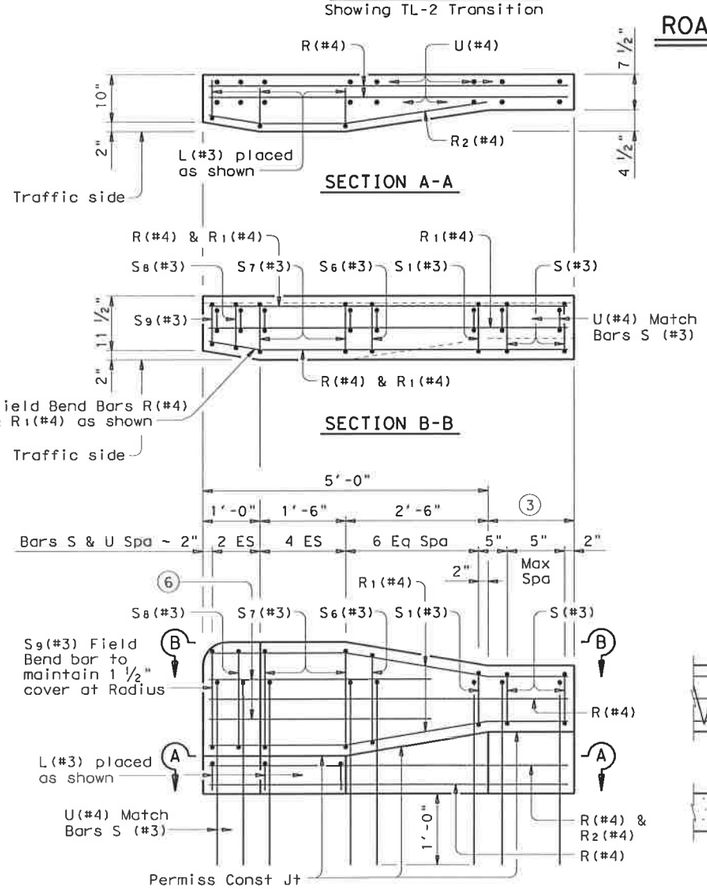

AT ABUT WINGWALL

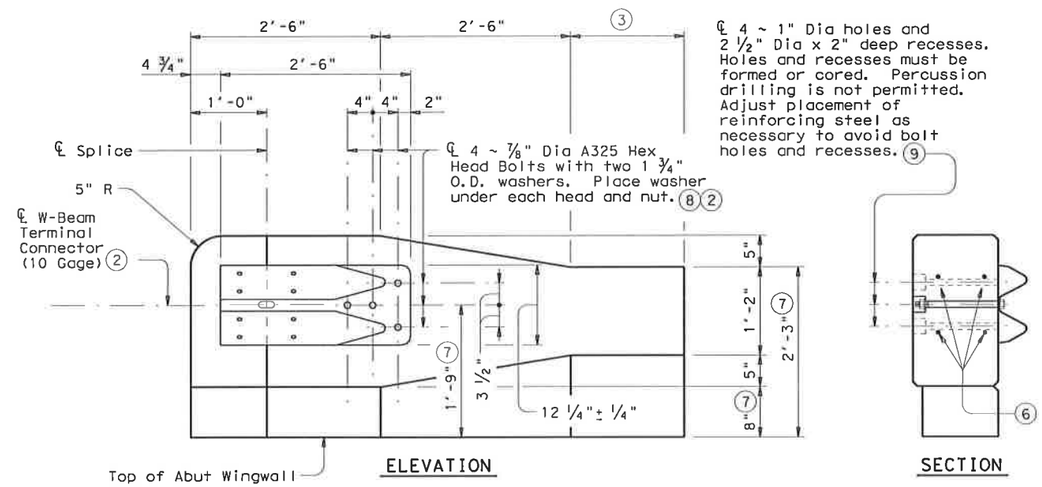

TL-2 TERMINAL CONNECTION DETAILS

1. Metal Beam Guard Fence Transitions must be attached to the bridge rail and extended along the embankment unless otherwise shown in the plans.
2. Terminal Connector and associated hardware are to be paid for under the Item "Metal Beam Guard Fence".
3. Wingwall Length minus 5'-0" (Varies)
4. ℄ Splice Jt or Exp Jt
5. One shop splice per pipe rail section is permitted with minimum 85 percent penetration. The weld may be square groove or single vee groove. Grind smooth.
6. 4 additional Bars R(#4) 3'-8" in length shall be placed inside Bars S(#3) and centered 2'-0" from end of rail when Terminal Connections are required. Field bend as needed.
7. Increase 2" for structures with overlay.
8. Bolts shall be sufficient length to extend ½" to ¾" beyond nut.
9. Bolt recesses are only required when pedestrians sidewalks are adjacent to back of rail.
10. Shop drawings required for tubular steel sections (may be submitted as 11"x 17" prints, provided they are clearly legible).

The use of this railing is restricted to design speeds of 45 mph or less.

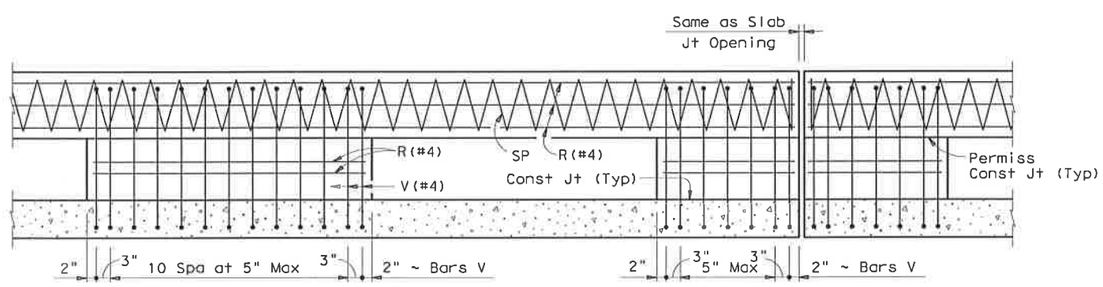

AT 5'-0" POST

AT SLAB EXPANSION JOINT

ELEVATION SHOWING TYPICAL REINFORCING PLACEMENT

DISCLAIMER:
The use of this standard is governed by the "Texas Engineering Practice Act". No warranty of any kind is made by TxDOT for any purpose whatsoever. TxDOT assumes no responsibility for the conversion of this standard to other formats or for incorrect results or damages resulting from its use.

ACC:
LEVELS

REVISIONS:
08-06: Changed Base Plate Thickness and Rail Turndown Base Plate.

SHEET 1 OF 2

Texas Department of Transportation
Bridge Division

COMBINATION RAIL

TYPE C203

FILE: rlstde28.dgn	DN: TxDOT	CK: TxDOT	DW: JTR	CK: TxDOT
© TxDOT February 2003	DISTRICT	FEDERAL AID PROJECT		SHEET
REVISIONS 4-05: Replaced TL-3 Terminal Connection with TL-2 Terminal Connection, added anchor bolt system & modified Notes.	SAT			654
	COUNTY	CONTROL	SECT	JOB	HIGHWAY
	BEXAR	2708	01	022	FM2696

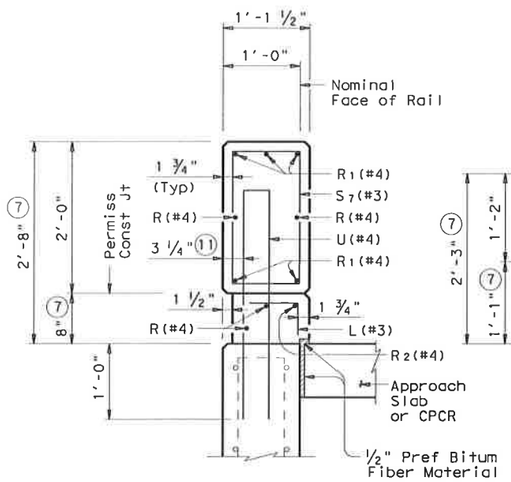

SECTION C-C
ON ABUTMENT WINGWALLS
OR CIP RETAINING WALLS

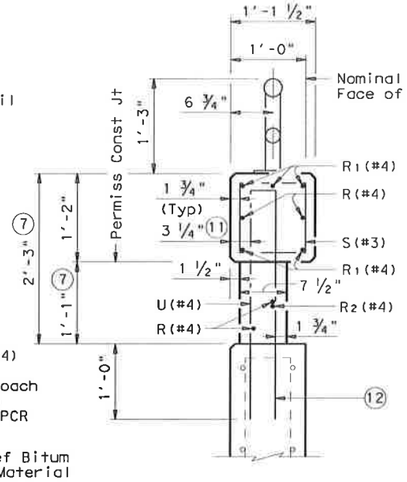

SECTION D-D
ON ABUTMENT WINGWALLS
OR CIP RETAINING WALLS

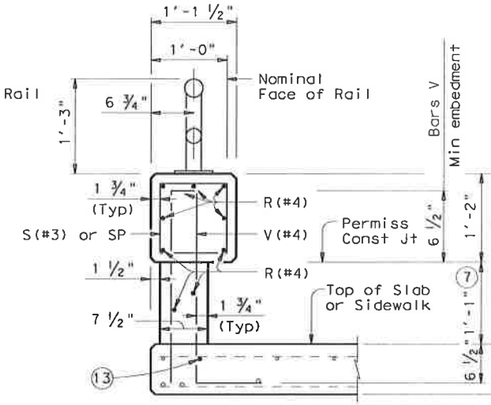

AT POST
ON BRIDGE SLAB

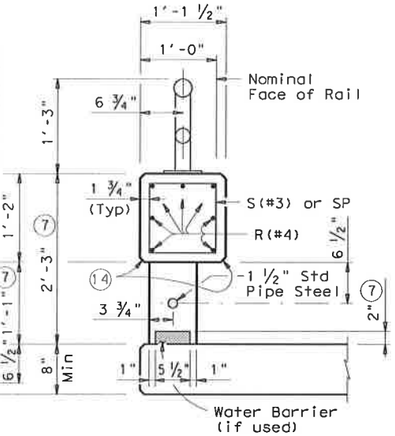

AT OPENING
ON BRIDGE SLAB

SECTIONS THRU RAIL

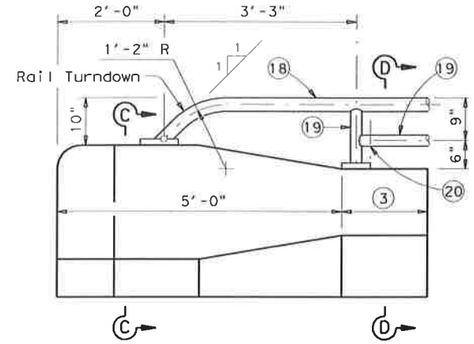

ELEVATION AT ABUTMENT WINGWALL
WITH PIPE RAIL TERMINAL DETAIL

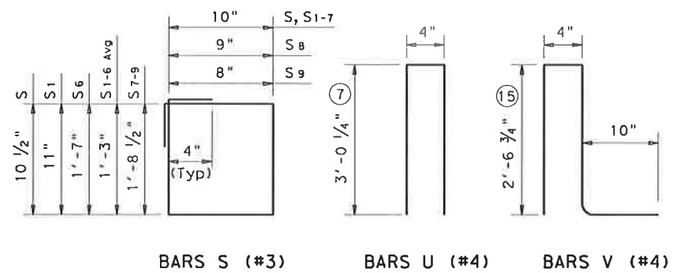

BARS S (#3) BARS U (#4) BARS V (#4)

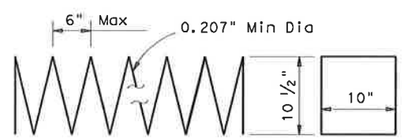

If two or more SP bars are used in a continuous panel length, they shall be butted within the center 3 ft of a rail post. At Contractor's option, Bars S spaced at 6" may be substituted for Bars SP.

BARS SP (0.207" Smooth Wire)

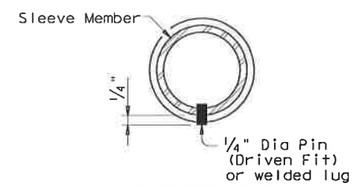

SECTION E-E

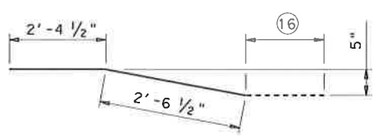

BARS R1(#4)

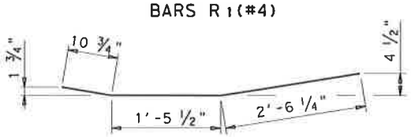

BARS R2(#4)

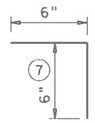

BARS L (#3)

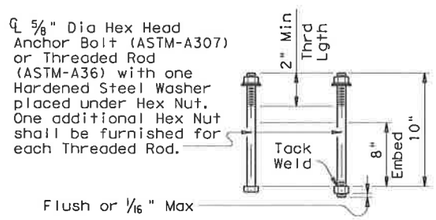

CAST-IN-PLACE ANCHOR BOLT OPTIONS (17)

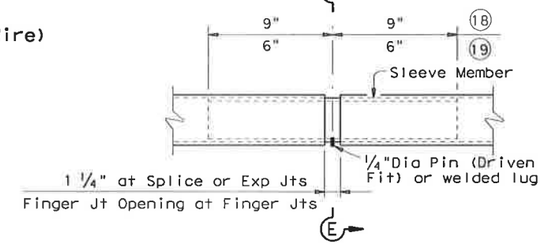

PIPE SPLICE DETAIL

Note: The difference between the outside dimension of sleeve and inside dimension of rail member shall not exceed 0.167" before galvanizing. Minimum wall thickness of sleeve shall be 0.120".

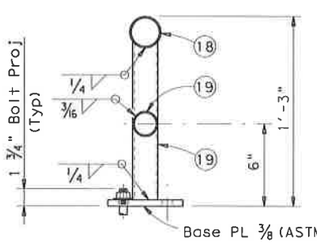

TRANSVERSE SECTION

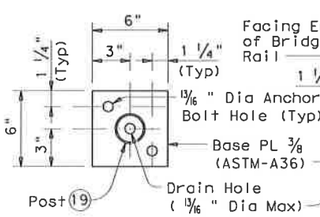

POST BASE PLATE PLAN

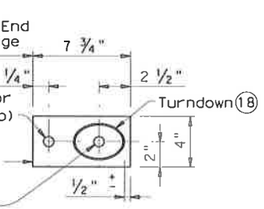

RAIL TURNDOWN
BASE PLATE PLAN

PIPE RAIL DETAILS

GENERAL NOTES:

This rail, without the pipe rail, has been successfully evaluated by full-scale crash tests to meet NCHRP Report 350 TL-3 criteria. However, its use is limited to design speeds of 45 mph or less because the pipe rail presents an occupant compartment intrusion threat to high speed vehicular traffic.

Rail anchorage details shown on this standard may require modification for select structure types. See appropriate details elsewhere in plans for these modifications.

All steel components except reinforcing shall be galvanized unless otherwise shown on plans.

All concrete shall be Class "C". Chamfer all exposed corners.

Epoxy coat Bars V and U if slab bars are epoxy coated.

All reinforcing shall be grade 60 except spirals.

Erection drawings showing panel lengths, tubular rail post spacing, and anchor bolt setting shall be submitted to the Engineer for approval.

Anchor bolts shall be 5/8" Dia ASTM A36 threaded rods with one hex nut and one hardened steel washer at each bolt. Embed threaded rods into parapet wall with an epoxy anchorage system. Estimated required embedment depth is 3". Core drill holes (percussion drilling not permitted). Anchorage system chosen must be able to achieve an ultimate tensile resistance of 3.9 kips. The Contractor must provide evidence to the Engineer that this can be achieved. Evidence of adequate tensile resistance can be based on the manufacturer's published values of ultimate tensile strength (anchor spacing and edge distance must be accounted for). Anchor installation, including hole size, drilling, and clean-out, must be in accordance with the manufacturer's recommendations.

At the contractor's option anchor bolts may be cast with the parapet (See Cast-in-Place Anchor Bolt Options).

Optional cast-in-place anchor bolts shall be 5/8" Dia ASTM A307 Grade A bolts (or A36 threaded rods with one tack welded hex nut each) with one hex nut and one hardened steel washer at each bolt.

Pipe for pipe rail shall conform to ASTM A53 Grade B or A501.

Face of rail, posts and parapet shall be vertical transversely unless otherwise approved by the Engineer. Pipe rail posts and opening end faces shall be perpendicular to top of adjacent concrete parapet grade. Grout may be used under pipe rail post base plates if necessary.

Water barriers shall be provided at openings draining onto undercrossing roadways and sidewalks. They may be cast-in-place or precast in convenient lengths and bonded to the bridge deck with an approved epoxy cement.

Pipe rail sections shall not include less than two posts, and no more than four (except at Abutments).

Exposed edges of pipe rail and pipe rail posts shall be rounded or chamfered to approximately 1/16" by grinding.

Average weight of railing with no overlay: 250 plf (Conc)
12 plf (Steel)

(3) Wingwall Length minus 5'-0" (Varies)

(7) Increase 2" for structures with overlay.

(11) 3 1/2" when vertical reinforcing has closer clear cover over horizontal reinforcing in abutment wingwalls or retaining walls on traffic side of wall.

(12) Bars U shall be rotated slightly to maintain cover requirements shown.

(13) Top longitudinal slab bar may be adjusted laterally 3" ± to tie reinforcing.

(14) 1 1/2"x 3/4" or 3/4"x 3/4" Chamfer (Typ at all openings)

(15) Length shown for 6 1/2" Min bar embedment with no overlay. Adjust as required.

(16) Wingwall Length minus 4'-10 1/2"

(17) See "General Notes" for anchor bolt information.

(18) 2 1/2" Std Pipe (2.875" O.D., 0.203" wall thickness)

(19) 2" Std Pipe (2.375" O.D., 0.154" wall thickness)

(20) 3/8" Dia Hole in bottom of pipe or tube (Minimum of 1 hole between posts ~ Typ)

REVISIONS:
08-08: Changed Base Plate Thickness and Rail Turndown Base Plate.

SHEET 2 OF 2

Texas Department of Transportation
Bridge Division

COMBINATION RAIL

TYPE C203

FILE: ristde28.dgn	DN: TxDOT	CK: TxDOT	DW: JTR	CK: TxDOT
© TxDOT February 2003	DISTRICT	FEDERAL AID PROJECT		SHEET
REVISIONS 4-05: Replaced TL-3 Terminal Connection with TL-2 Terminal Connection, addded anchor bolt system & modified Notes.	SAT			660
	COUNTY	CONTROL	SECT	JOB	HIGHWAY
	BEXAR	2708	01	022	FM2696

DISCLAIMER:
The use of this standard is governed by the "Texas Engineering Practice Act". No warranty of any kind is made by TxDOT for any purpose whatsoever. TxDOT assumes no responsibility for the conversion of this standard to other formats or for incorrect results or damages resulting from its use.

ACC:

LEVELS

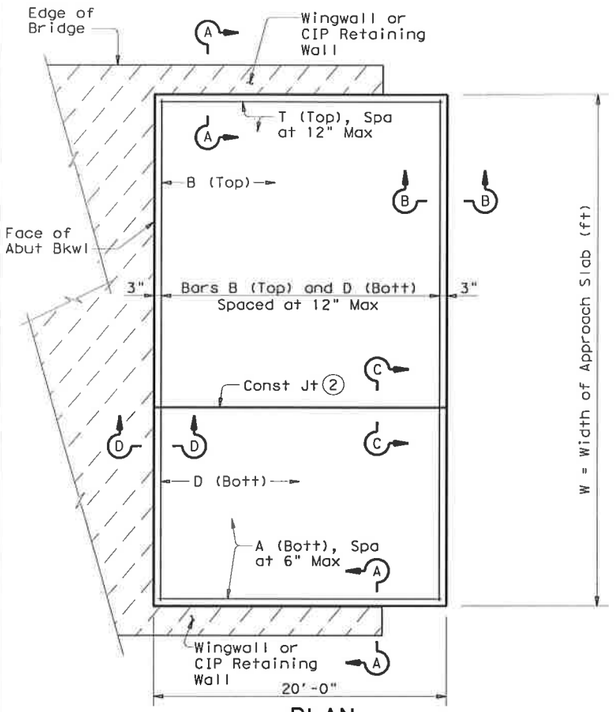

PLAN
(Showing Non-Skewed Approach Slab)

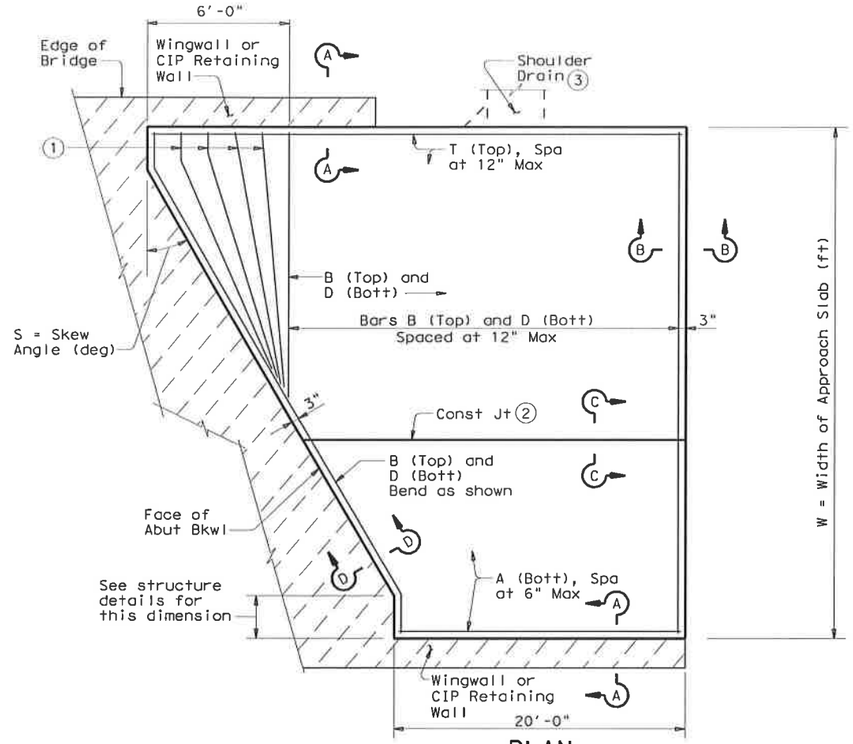

PLAN
(Showing Skewed Approach Slab)

BAR TABLE	
BAR	SIZE
A	#8
B	#5
D	#5
T	#5

APPROXIMATE QUANTITIES (4)

Reinf steel weight = 8.5 Lbs/SF of Approach Slab

Area of Appr Slab = $20W + 0.5W^2 \tan S$ (SF)

W = Width of Approach Slab (ft)

S = Skew Angle (deg)

(1) Flare Bars B and D in this region (1'-6" Max Spa, 3" Min Spa). Minimum flared bar length = 2'-6". Bend bars as necessary.

(2) Provide longitudinal construction joints that align with longitudinal construction joints in the bridge slab with bridges built in stages. Other longitudinal construction joints must receive approval of the Engineer.

(3) See details elsewhere in plans for shoulder drain location and details.

(4) For Contractor's information only.

(5) Multiple piece tie bars are acceptable at longitudinal construction joints provided minimum laps shown are achieved.

(6) See details elsewhere in plans for required cross-slope.

(7) Place in accordance with Item 438.

(8) Backer rod shall be 25% larger than joint opening and shall be compatible with the sealant.

(9) Place ½" Preformed Bituminous Fiber Material between concrete railing and top of approach slab as shown when concrete railing projects over the approach slab.

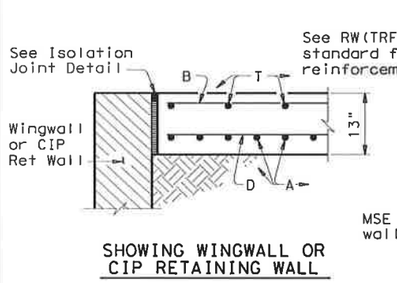

SHOWING WINGWALL OR CIP RETAINING WALL

SHOWING MSE WALL

SECTION A-A

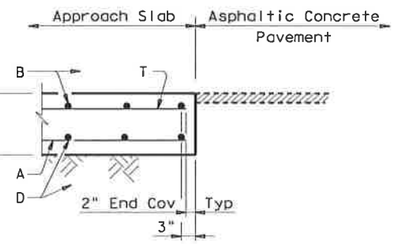

SECTION B-B

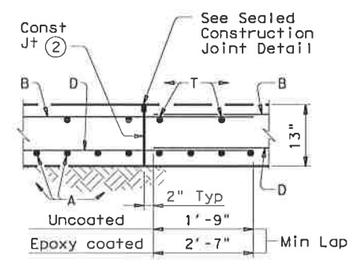

SECTION C-C (5)

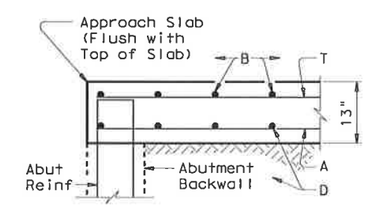

SECTION D-D

GENERAL NOTES:

Construct approach slab in accordance with Item 420.

Concrete shall be Class "S" with a minimum compressive strength of 4,000 psi.

All reinforcing steel shall be Grade 60.

Construct the subgrade or subbase from the bridge for a minimum distance of 100 feet prior to the approach slab, unless otherwise indicated on the plans.

Compact and finish the subgrade or foundation for the approach slab to the typical cross-section and to the lines and grades shown on the plans.

Cure for 4 days using water or membrane curing per Item 420.

Sealant, backer rod and preformed bituminous fiber material is subsidiary to approach slab concrete.

Provide a 1" bondbreaker (asphaltic concrete pavement or asphalt stabilized base) between the approach slab and cement stabilized backfill or cement treated base. Other bondbreakers may be used if approved by the Engineer.

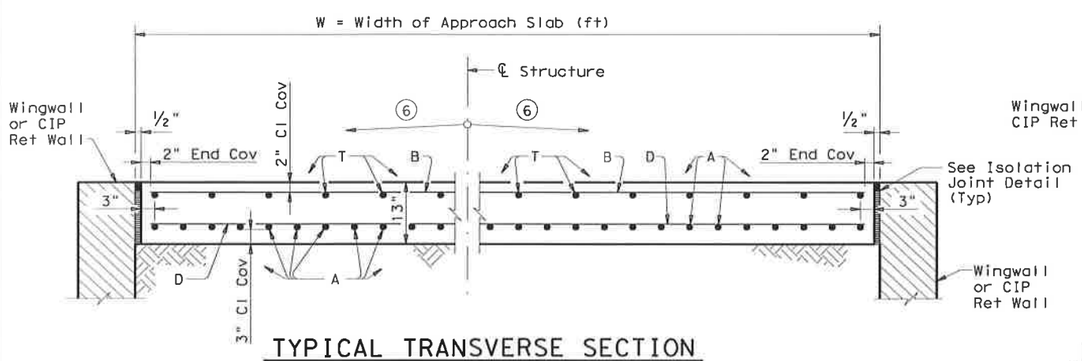

TYPICAL TRANSVERSE SECTION

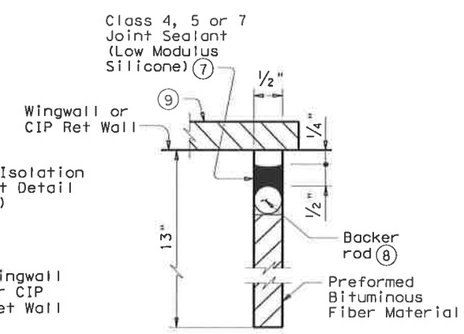

ISOLATION JOINT DETAIL

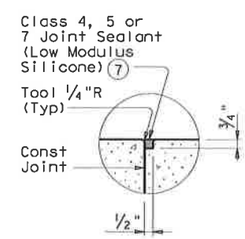

SEALED CONSTRUCTION JOINT DETAIL

Texas Department of Transportation
Bridge Division

BRIDGE APPROACH SLAB
ASPHALTIC CONCRETE PAVEMENT

BAS-A

FILE: basastel.dgn	DN: TxDOT	CK: TxDOT	DW: TxDOT	CK: TxDOT
© TxDOT April 2006	DISTRICT	FEDERAL AID PROJECT		SHEET
REVISIONS	SAT			601
	COUNTY	CONTROL	SECT	JOB	HIGHWAY
	BEXAR	2708	01	022	FM2696

DISCLAIMER:
The use of this standard is governed by the "Texas Engineering Practice Act". No warranty of any kind is made by TxDOT for any purpose whatsoever. TxDOT assumes no responsibility for the conversion of this standard to other formats or for incorrect results or damages resulting from its use.

PATH:
LEVELS DI:

TRAFFIC SIGNAL NOTES

GENERAL NOTES:

CONTACT CITY OF SAN ANTONIO TRAFFIC OPERATIONS (207-7765) 48 HOURS PRIOR TO COMMENCING WORK.

THE CITY OF SAN ANTONIO WILL APPROVE LOCATIONS FOR POLES, CONTROLLER FOUNDATION AND ELECTRICAL SERVICE PEDESTAL PRIOR TO CONSTRUCTION. STAKE ALL LOCATIONS PRIOR TO CONTACTING CITY FOR APPROVAL.

PERFORM ELECTRICAL WORK IN COMPLIANCE WITH THE NATIONAL ELECTRIC CODE AND NESA.

FURNISH AND MAINTAIN ALL TRAFFIC CONTROL DEVICES, LIGHTING, OR WARNING DEVICES REQUIRED TO COMPLETE THE WORK. PROVIDE CONSTRUCTION SIGNS AND TRAFFIC CONTROL DEVICES THAT CONFORM TO THE LATEST TEXAS MANUAL ON UNIFORM TRAFFIC CONTROL DEVICES.

ACQUIRE ALL PERMITS, TESTS, APPROVALS AND ACCEPTANCES REQUIRED TO COMPLETE CONSTRUCTION.

SUBMIT THREE (3) COPIES OF EQUIPMENT SUBMITTALS FOR TRAFFIC SIGNAL COMPONENTS TO THE TRAFFIC SIGNAL ENGINEER (733-4573). SUBMITTALS CONSIST OF APPROPRIATE COMBINATION OF CATALOG SHEETS, MATERIAL LISTS, MANUFACTURER'S BROCHURES, TECHNICAL BULLETINS, SPECIFICATIONS, DIAGRAMS, OR PRODUCT SAMPLES TO DESCRIBE A SYSTEM, PRODUCT OR ITEM. CLEARLY IDENTIFY SPECIFIC ITEM NUMBERS AND PRODUCT CODES WHEN MULTIPLE PRODUCTS ARE LISTED ON THE SAME SHEET.

FURNISH AND PROVIDE MATERIALS AND CONSTRUCTION PROCEDURES WITHIN THE SCOPE OF THE PROJECT THAT CONFORM TO APPLICABLE CITY OF SAN ANTONIO STANDARD SPECIFICATIONS FOR PUBLIC WORKS CONSTRUCTION (LATEST EDITION), TEXAS DOT STANDARD SPECIFICATIONS, APPLICABLE CITY BUILDING CODE REGULATIONS AND PROVISIONS AND OTHER SAFETY CODES AND INSPECTION REQUIREMENTS OF THE FIRE DEPARTMENT.

FURNISH MATERIALS THAT ARE NEW UNDEPRECIATED STOCK. FURNISH NEW EQUIPMENT UNLESS OTHERWISE SHOWN ON THE PLANS.

FURNISH AND INSTALL ALL PERMANENT SIGNS AND MOUNTING HARDWARE FOR SIGNS MOUNTED ON TRAFFIC SIGNAL EQUIPMENT. SUCH WORK IS CONSIDERED SUBSIDIARY TO THE BID ITEM 680, "INSTALLATION OF HIGHWAY TRAFFIC SIGNALS".

FURNISH AND INSTALL A GROUND BOX IN THE CONTROLLER FOUNDATION. SUCH WORK IS CONSIDERED SUBSIDIARY TO THE BID ITEM 680, "INSTALLATION OF HIGHWAY TRAFFIC SIGNALS".

FURNISH POLYMER CONCRETE GROUND BOX COVERS WITH "TRAFFIC SIGNAL" LEGIBLY IMPRINTED WITH 1-INCH LETTERS (MINIMUM HEIGHT).

RESTORE TO ORIGINAL CONDITION, OR BETTER, ANY DAMAGES TO EXISTING BUILDING, RETAINING WALLS, UTILITIES, FENCES, PAVEMENT, CURBS OR DRIVEWAYS. RESTORE THE CONSTRUCTION AREA TO ORIGINAL CONDITION, OR BETTER, PRIOR TO FINAL INSPECTION.

PERFORM FINAL ADJUSTMENT OF VEHICLE AND PEDESTRIAN SIGNALS AS DIRECTED. SUCH WORK IS CONSIDERED SUBSIDIARY TO BID ITEM 682, " VEHICLE AND PEDESTRIAN SIGNAL HEADS".

FURNISH TRAFFIC SIGNAL SECTIONS MADE OF POLYCARBONATE RESIN AND BY THE SAME MANUFACTURER.

COVER VEHICLE AND PEDESTRIAN SIGNAL FACES WITH BURLAP SO THAT THE INDICATIONS CANNOT BE SEEN UNTIL PLACED IN OPERATION.

PROVIDE CONTINUED OPERATION AND MAINTENANCE OF THE EXISTING SIGNALS UNTIL NEW CONTROLS ARE READY. COORDINATE "TURN-ON" OF THE NEW TRAFFIC SIGNAL.WITH CITY OF SAN ANTONIO TRAFFIC DEPARTMENT.

PROVIDE AN OFF-DUTY UNIFORMED OFFICER TO CONTROL TRAFFIC WHEN NECESSARY TO TURN OFF AN EXISTING SIGNAL UNTIL THE TRAFFIC SIGNAL IS BACK IN OPERATION. EXISTING TRAFFIC SIGNAL SHALL BE PLACED IN FLASH MODE AS FOLLOWS:

AMBER INDICATIONS FOR BLANCO RD
RED INDICATIONS FOR HUEBNER AND WILDERNESS OAK.

PROVIDE AN EXTRA 10 FEET OF CABLE TERMINATING IN THE CONTROLLER CABINET. SUCH WORK IS CONSIDERED SUBSIDIARY TO BID ITEM 680, "INSTALLATION OF HIGHWAY TRAFFIC SIGNALS".

INSTALL CONTINUOUS CABLE RUNS WITHOUT SPLICES FROM TERMINAL POINT TO TERMINAL POINT AS APPROVED. PROVIDE #14 AWG SOLID COPPER SIGNAL CABLE. PROVIDE THE NUMBER OF CONDUCTORS AS SHOWN ON THE PLANS.

PEDESTRIAN EQUIPMENT NOTES:

THE PEDESTRIAN PUSHBUTTON SHALL BE RAISED OR FLUSH TYPE AND BE A MINIMUM OF 2 INCHES IN THE SMALLEST DIMENSION. FORCE TO ACTIVATE THE PUSH BUTTON IS 5 LB./FT. AT MOST.

FURNISH ALUMINUM PIPE (ALLOY 6061-T6) PEDESTAL POLE ASSEMBLIES.

PEDESTRIAN SIGNAL AND PUSH BUTTON CALLOUTS ARE COMBINED FOR SIMPLICITY. MOUNT PEDESTRIAN SIGNALS ON BACK SIDE OF POLE OR PEDESTAL POLE AWAY FROM THE STREET. ORIENT AND MOUNT PEDESTRIAN PUSH BUTTONS TOWARDS LANDING ZONE/SIDEWALK.

VIDEO DETECTION EQUIPMENT NOTES:

PROVIDE VIDEO IMAGING VEHICLE DETECTION SYSTEM (VIVDS) FOR PERMANENT SIGNAL DETECTION. MOUNT CAMERA ASSEMBLIES ABOVE THE ROADWAY ON THE LUMINAIRE ARMS/MAST ARMS AS SHOWN ON THE PLANS. FOR OPTIMUM DETECTION, MOUNT CAMERA AT A HEIGHT IN ACCORDANCE WITH MANUFACTURERS RECOMMENDATIONS. PROVIDE ALL MOUNTING HARDWARE REQUIRED. SUCH REQUIREMENTS ARE SUBSIDIARY TO THE VARIOUS VIVDS BID ITEMS.

DETECTION ZONES FOR THE VIVDS EQUIPMENT IS BASED ON APPROACH SPEEDS. CONTINUOUS SETBACK DETECTION IS BASED ON THE FOLLOWING APPROACH SPEED:

30 MPH-STOP BAR DETECTION,

35 MPH-BETWEEN 100 FEET AND 260 FEET FROM THE REFERENCE LINE,

40 MPH-BETWEEN 100 FEET AND 290 FEET FROM THE REFERENCE LINE,

45 MPH-BETWEEN 100 FEET AND 335 FEET FROM THE REFERENCE LINE,

50 MPH-BETWEEN 100 FEET AND 370 FEET FROM THE REFERENCE LINE,

55 MPH-BETWEEN 100 FEET AND 435 FEET FROM THE REFERENCE LINE,

VIVDS ZONES IN THE FIELD SUBJECT TO APPROVAL BY CITY TRAFFIC PERSONNEL.

WIRE THE VIVDS CAMERAS WITH TWO-IN-ONE CABLE (COMM CABLE AND POWER SUPPLY) AS RECOMMENDED BY THE MANUFACTURER. THE CITY OF SAN ANTONIO STANDARDS VIVDS INSTALLATION USES A TWO-IN-ONE CABLE THAT COMBINES THE RG-59 COMMUNICATION CABLE AND THE 3/C-#18 AWG POWER CABLE IN ONE JACKET.

PROVIDE A VIVDS PROCESSOR SYSTEM CONSISTING OF UNITS THAT INSERT DIRECTLY INTO A 2070 CONTROLLER INPUT FILE. PROVIDE ONE PROCESSOR UNIT PER CAMERA.

SPECIAL NOTES:

PRIOR TO CONSTRUCTION, FIELD LOCATE AND STAKE LOCATION OF POLES, GROUND BOXES, AND CABINETS FOR ENGINEER APPROVAL. POLE AND GROUND BOX LOCATIONS MAY BE ADJUSTED BY ENGINEER PRIOR TO CONSTRUCTION TO ACCOMMODATE FIELD CONDITIONS.

FURNISH MOUNTING BRACKET ASSEMBLY OPTION "C" (ASTRO-BRACS) FOR ALL PROPOSED MAST ARM POLE ASSEMBLIES AS SHOWN ON THE STATE STANDARD SHEETS "SINGLE MAST ARM ASSEMBLIES (SMA)". MOUNTING BRACKET ASSEMBLIES (ASTRO-BRACS) ARE CONSIDERED SUBSIDIARY TO BID ITEM 682, "VEHICLE AND PEDESTRIAN SIGNAL HEADS".

FURNISH PEDESTAL POLES FROM THE SAME MANUFACTURER.

FURNISH ORNAMENTAL CAPS IN PLACE OF THE MAST ARM TENON ENDS.

PROVIDE ONE ADDITIONAL 2-INCH CONDUIT IN EACH POLE FOUNDATION. STUB AND CAP CONDUIT OUT 2-FEET FROM THE FOUNDATION. SUCH WORK IS CONSIDERED SUBSIDIARY TO BID ITEM 680, "INSTALLATION OF HIGHWAY TRAFFIC SIGNALS".

STATE OF TEXAS
JOSE A. SANCHEZ
87890
LICENSED
PROFESSIONAL ENGINEER

JOSE A. SANCHEZ — DATE 2007.10.26

NO.	REVISION	BY	DATE

CP&Y Chiang, Patel & Yerby, Inc.

TEDSI INFRASTRUCTURE GROUP
Consulting Engineers
10999 IH 10 West • Suite 320
San Antonio, Texas 78230
(210) 858-8610

BEXAR COUNTY
PUBLIC WORKS DIVISION

F.M. 2696 (BLANCO ROAD)

TRAFFIC SIGNAL NOTES
HUEBNER RD - WILDERNESS OAK

SHEET 1 OF 1

Designed: RC	STATE	BEXAR COUNTY FILE NUMBER	PLAN SET NO.
Checked: JAS	TEXAS		162
Drawn: RC	COUNTY		OF
Checked: JAS	BEXAR		842

P:\2007\27958-1-Blanco Rd South\Design\CSJ\Traffic\Traffic Signals\61025SR07L01.dgn
05:22:27 PM
2007.10.26

SIGNAL HEAD SCHEDULE

12" W/BACKPLATE	12" W/BACKPLATE	12" W/BACKPLATE	12" W/BACKPLATE	PEDESTRIAN SIGNAL HEAD
1	2	3	4	5

SIGN DETAILS

LEFT TURN SIGNAL R10-10L 24"x30" S4, S8	LEFT TURN YIELD ON GREEN R10-12 30"x36" S6
ONLY R3-5L 30"X36" S1	ONLY R3-5R 30"X36" S3, S10
PUSH BUTTON FOR R10-4bL (9" x 12")	PUSH BUTTON FOR R10-4bR (9" x 12")
BLANCO RD <19400 19300> S5	
BLANCO RD 19400> S9	
HUEBNER RD <19200 19100> S7	
HUEBNER RD <19100 19200> S2	

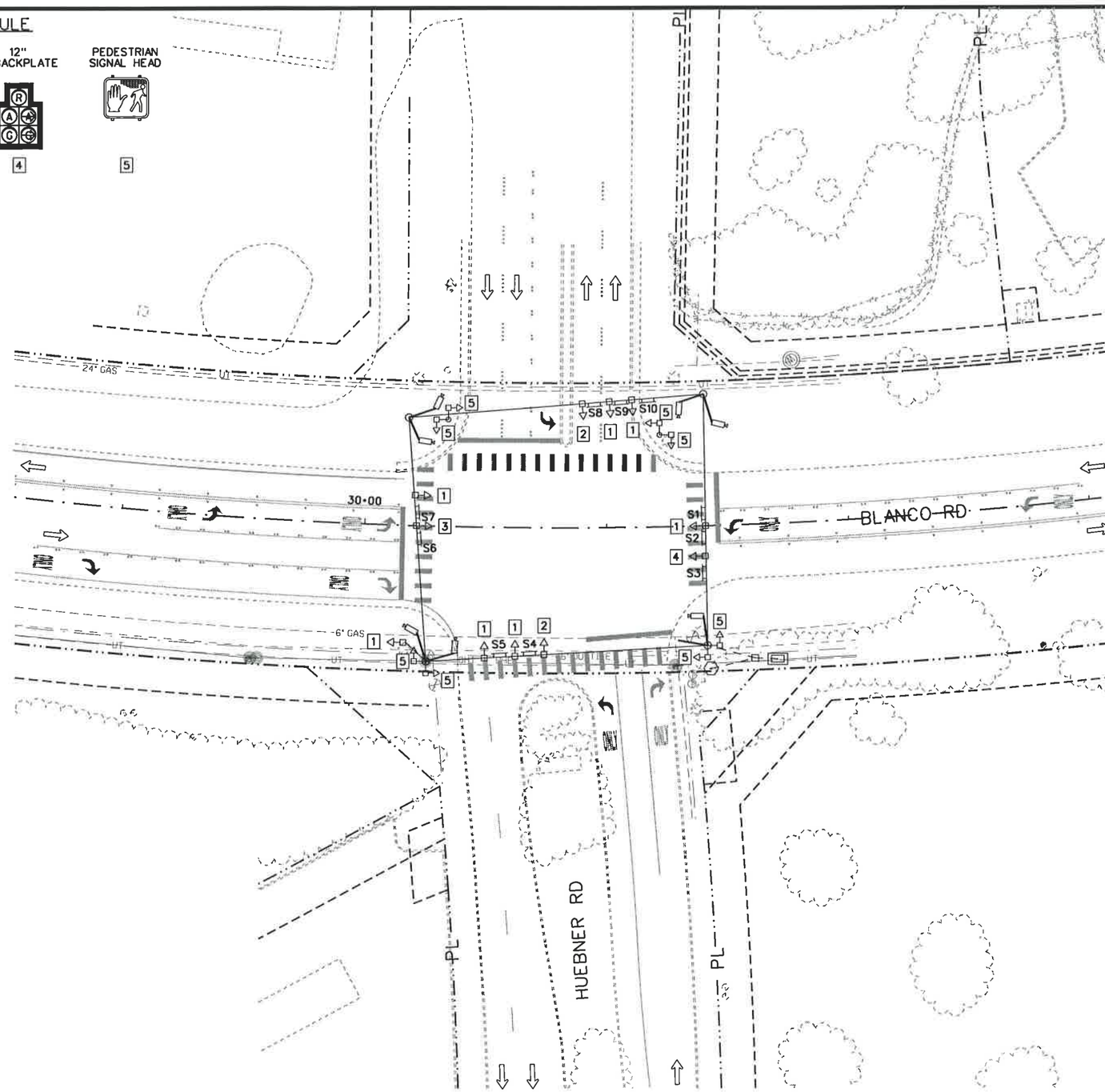

25 12.5 0 25 50
HORIZ. SCALE FEET

LEGEND

- WOODEN POLE
- SPAN WIRE
- VERTICAL SIGNAL HEAD
- PEDESTRIAN SIGNAL HEAD
- VIVDS CAMERA
- GROUND MOUNTED CONTROLLER CABINET
- ELECTRICAL SERVICE
- GROUND BOX
- OVHD SIGN MOUNTED ON SPAN WIRE
- CONDUIT
- LUMINAIRE ARM

NOTES:

INFORMATION SHOWN RELATIVE TO EXISTING UNDERGROUND UTILITIES AND CONDUITS IS BASED ON THE BEST AVAILABLE INFORMATION SUPPLIED BY TXDOT, LOCAL ENTITIES, VARIOUS UTILITY COMPANIES AND FIELD SURVEYS.

STATE OF TEXAS
JOSE A. SANCHEZ
87890
LICENSED
PROFESSIONAL ENGINEER

JOSE A. SANCHEZ 2007.10.26
DATE

NO.	REVISION	BY	DATE

CP&Y Chiang, Patel & Yerby, Inc.

TEDSI INFRASTRUCTURE GROUP
Consulting Engineers
10999 IH 10 West • Suite 320
San Antonio, Texas 78230
(210) 858-0610

BEXAR COUNTY
PUBLIC WORKS DIVISION

F.M. 2696 (BLANCO ROAD)

EXISTING SIGNAL LAYOUT

BLANCO RD AT HUEBNER RD

SHEET 1 OF 1

Designed: RC	STATE	BEXAR COUNTY FILE NUMBER	PLAN SET NO.	
Checked: JAS	TEXAS		663	
Drawn: RC	COUNTY		OF	
Checked: JAS	BEXAR		842	

P:\2007\27958-1-Blanco Rd South\Design\CSJ\Traffic\Traffic Signals\6102SSRDTL02.dgn
05:22:44 PM
2007.10.26

SIGNAL HEAD SCHEDULE

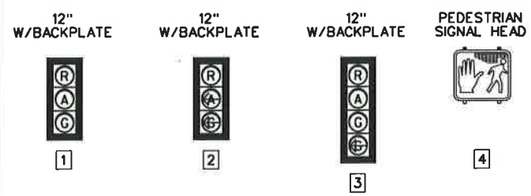

SIGN DETAILS

POLES/EQUIPMENT				
ITEM	DESIGNATION	FOUNDATION TYPE/DEPTH	STATION	OFFSET
A	TRAFFIC SIGNAL CONTROLLER AND CABINET	N/A	30+03	74.75'RT
B	PEDESTAL ELECTRICAL SERVICE	N/A	30+09	82'RT
C	SMA 50 - 80	48-A/22'	30+23	66'RT
D	SMA 60 - 80	48-A/22'	31+49	63'RT
E	PEDESTAL POLE	★ 24-A/16'	31+35	65'LT
F	SMA 44 - 80	★ 36-A/24'	31+26	75.5'LT
G	PEDESTAL POLE	24-A/6'	30+20	55.25'LT
H	SMA 60 - 80	48-A/22'	30+05	54.5'LT
J	EXISTING LUMINAIRE POLE	30"DIAM/8'	31+39	75.5'RT

★ DEPTH OF FOUNDATION INCREASED TO COMPENSATE FOR DISTURBED SOIL DUE TO STORM SEWER PIPE INSTALLATION. REFER TO STORM SEWER LAYOUTS FOR DETAILS.

CONDUIT AND CONDUCTOR SCHEDULE														
	CONDUIT/SPAN RUN NUMBER		1	2	3	4	5	6	7	8	9	10	11	12
	NUMBER OF CONDUITS		1	1/2	2	1	1/2	2	2	1/2	2	1/2	2	2
	CONDUIT SIZE IN INCHES		2	2/3	3	2	2/3	3	3	2/3	3	2/3	3	2
	LENGTH OF RUN (FT)		8	7	120	13	7	116	20	11	125	8	21	14
			T	T	T	T	T	T	T	T	T	T	T	T
AWG	CIRCUIT													
#14 7-COND IMSA CABLE	SIGNALS	C										1	1	
		D								1	1		1	
		F		1	1			1	1					
		H					1	1	1					
#14 9-COND IMSA CABLE	PED SIGNALS, PUSH BUTTONS	C										1	1	
		D								1	1		1	
		E	1		1			1	1					
		G				1		1	1					
#6 XHHW	120 VOLT: POWER HOT													1
	120 VOLT: POWER COMMON													1
#6 BARE	BARE COPPER BOND/GROUND													2
#8 BARE	BARE COPPER BOND/GROUND		1	2	2	1	2	2	2	2	2	2	2	
VIVDS #18 3-COND AND RG-59	VIVDS CAMERA	V16 (Ø1, Ø6)					1	1	1					
		V25 (Ø2, Ø5)								1	1		1	
		V2 (Ø2)								1	1		1	
		V3A (Ø3)		1	1			1	1					
		V3B (Ø3)		1	1			1	1					
		V4A (Ø4)										1	1	
		V4B (Ø4)										1	1	
		V6 (Ø6)					1	1	1					
LUMINAIRE TRAY CBL 3/C-#12	LUMINAIRE													
INTER-CONNECT	FIBER OPTIC CBL S/M (12 STRAND) (TY A)				1			1	1					

"T" DENOTES TRENCH/"B" DENOTES BORE

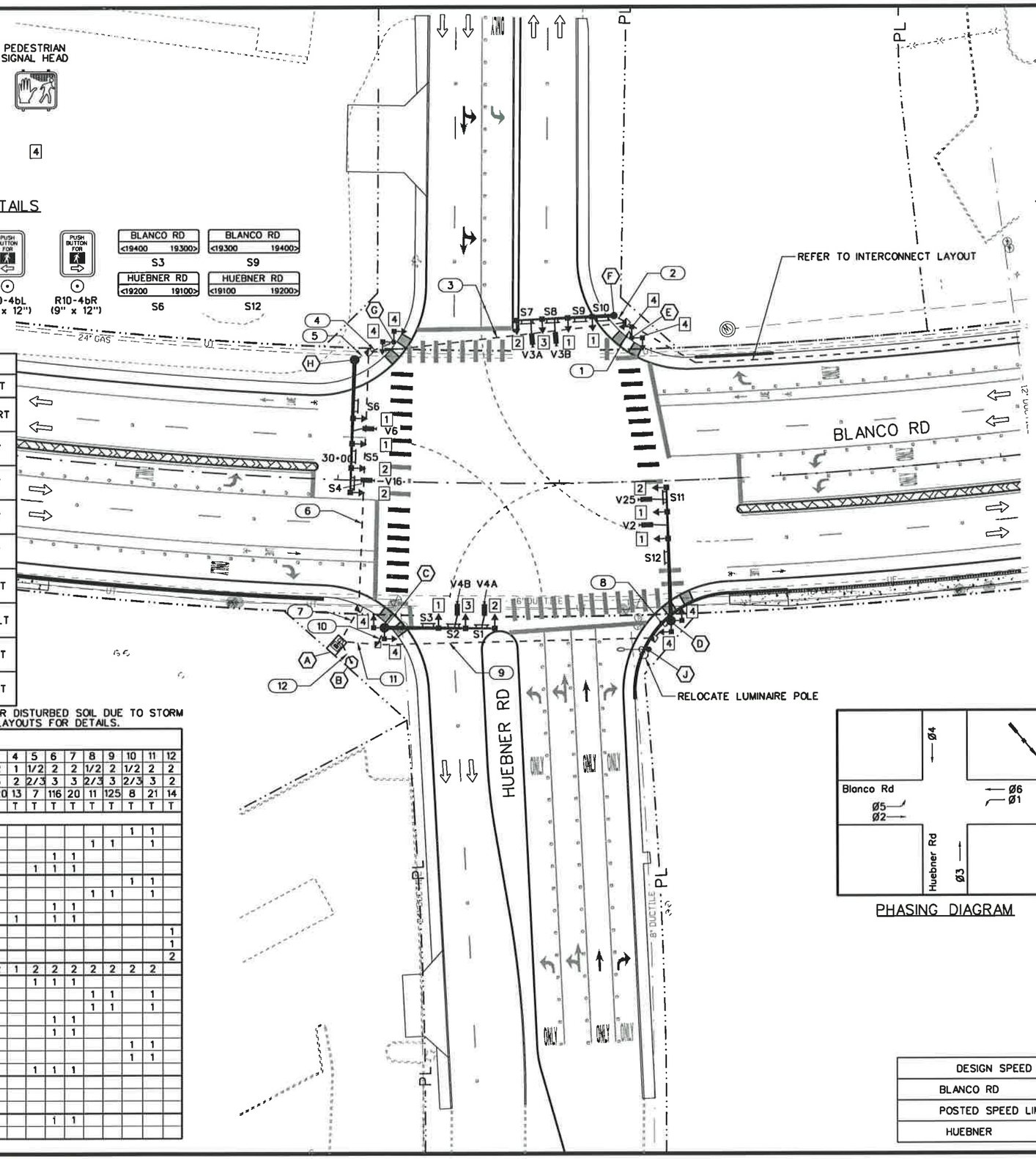

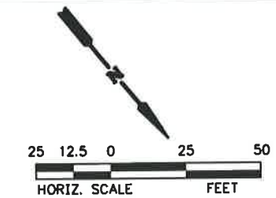

LEGEND

- MAST ARM POLE
- PEDESTAL POLE
- VERTICAL SIGNAL HEAD
- PEDESTRIAN SIGNAL HEAD W/PUSHBUTTON & SIGN
- VIVDS CAMERA W/EXTENSION ROD ON MAST ARM
- GROUND MOUNTED TY 332 CABINET/FOUNDATION
- ELECTRICAL SERVICE PEDESTAL CABINET
- GROUND BOX (TYPE D) W/APRON
- OVERHEAD SIGN MOUNTED ON MAST ARM
- CONDUIT (SIZE AND TYPE AS SPECIFIED)
- WIRE RUN DESIGNATION

NOTES:

1. CONTRACTOR TO EXPOSE UTILITES WITHIN A 5 FT RADIUS PRIOR TO CONSTRUCTION OF PROPOSED DRILLED SHAFT FOUNDATIONS AND MAKE NECESSARY PLACEMENT ADJUSTMENTS IN THE FIELD.
2. CONFIRM COMPLETION OF RELOCATION OF EXISTING UTILITIES BEING PERFORMED BY OTHERS PRIOR TO EXCAVATION FOR DRILLED SHAFT FOUNDATIONS.
3. COORDINATE VIVDS CAMERA CONNECTIONS AND DETECTION ZONE PROGRAMMING WITH CITY OF SAN ANTONIO TRAFFIC OPERATIONS PERSONNEL.

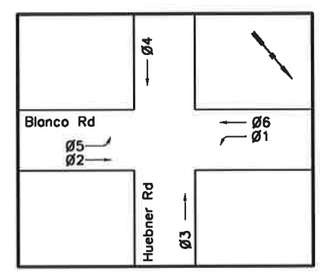

PHASING DIAGRAM

DESIGN SPEED	
BLANCO RD	45 MPH
POSTED SPEED LIMIT	
HUEBNER	40 MPH

STATE OF TEXAS
JOSE A. SANCHEZ
87890
LICENSED
PROFESSIONAL ENGINEER

2007.12.07

JOSE A. SANCHEZ DATE

NO.	REVISION	BY	DATE

CP&Y Chiang, Patel & Yerby, Inc.

TEDSI INFRASTRUCTURE GROUP
Consulting Engineers
10999 IH 10 West • Suite 330
San Antonio, Texas 78230
(210) 858-0610

BEXAR COUNTY
PUBLIC WORKS DIVISION

F.M. 2696 (BLANCO ROAD)

PROPOSED SIGNAL LAYOUT

BLANCO RD AT HUEBNER RD

SHEET 1 OF 1

Designed: RC	STATE	BEXAR COUNTY FILE NUMBER	PLAN SET NO.	
Checked: JAS	TEXAS		66	
Drawn: RC	COUNTY		OF	
Checked: JAS	BEXAR		842	

P:\2007\27958-1-Blanco Rd South\Design\CSJ\Traffic\Traffic Signals\6102SSRDTL03.dgn
10:29:07 AM
12/7/2007

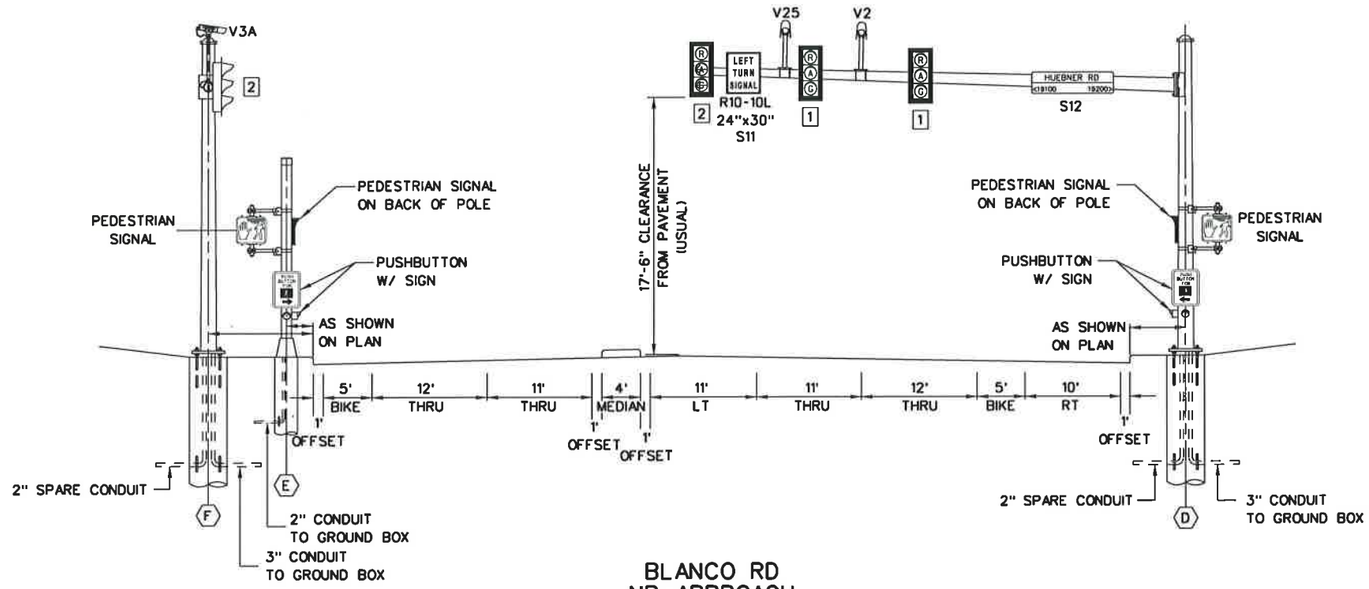

BLANCO RD
NB APPROACH

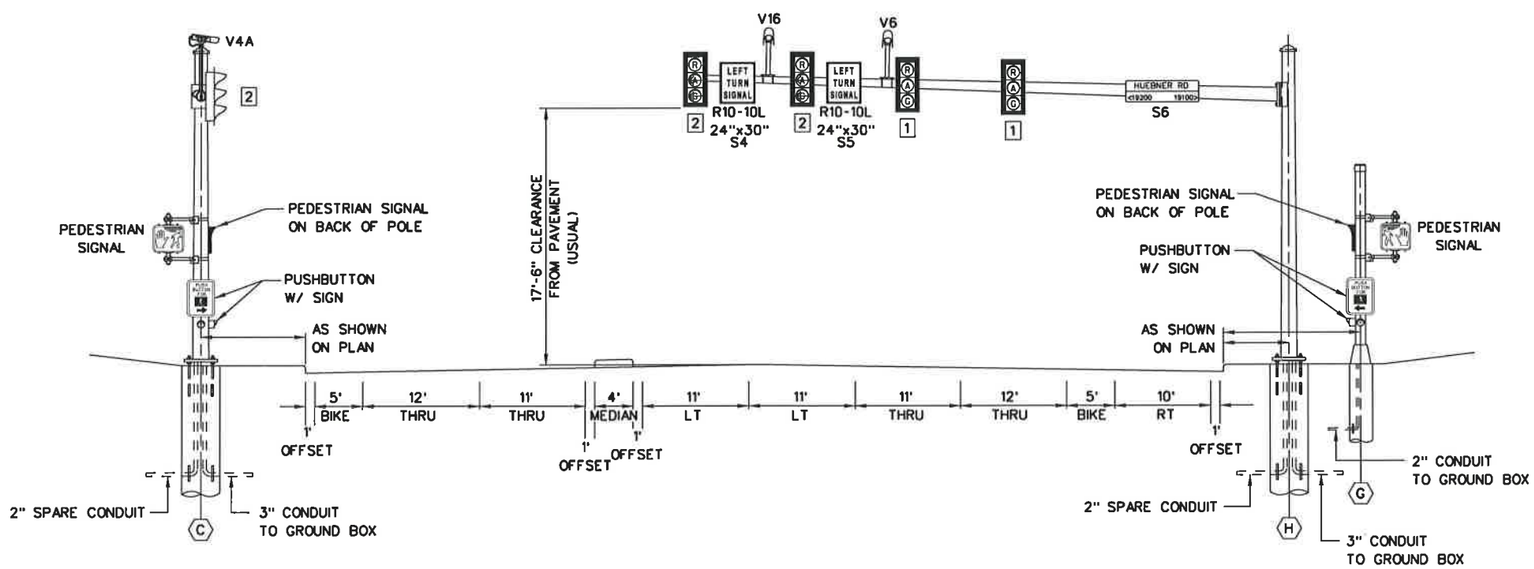

BLANCO RD
SB APPROACH

STATE OF TEXAS
JOSE A. SANCHEZ
87890
LICENSED
PROFESSIONAL ENGINEER

2007.12.07

JOSE A. SANCHEZ DATE

NO.	REVISION	BY	DATE

CP&Y Chiang, Patel & Yerby, Inc.

TEDSI INFRASTRUCTURE GROUP
Consulting Engineers
10999 IH 10 West • Suite 320
San Antonio, Texas 78230
(210) 858-0610

BEXAR COUNTY
PUBLIC WORKS DIVISION

F.M. 2696 (BLANCO ROAD)

TRAFFIC SIGNAL ELEVATIONS

BLANCO RD AT HUEBNER RD

SHEET 1 OF 2

Designed:	RC	STATE	BEXAR COUNTY FILE NUMBER	PLAN SET NO.
Checked:	JAS	TEXAS		668
Drawn:	RC	COUNTY		OF
Checked:	JAS	BEXAR		842

P:\2007\27958-1-Blanco Rd South\Design\CSJ\Traffic\Traffic Signals\6102SSRDTL04.dgn
12/7/2007 10:29:35 AM

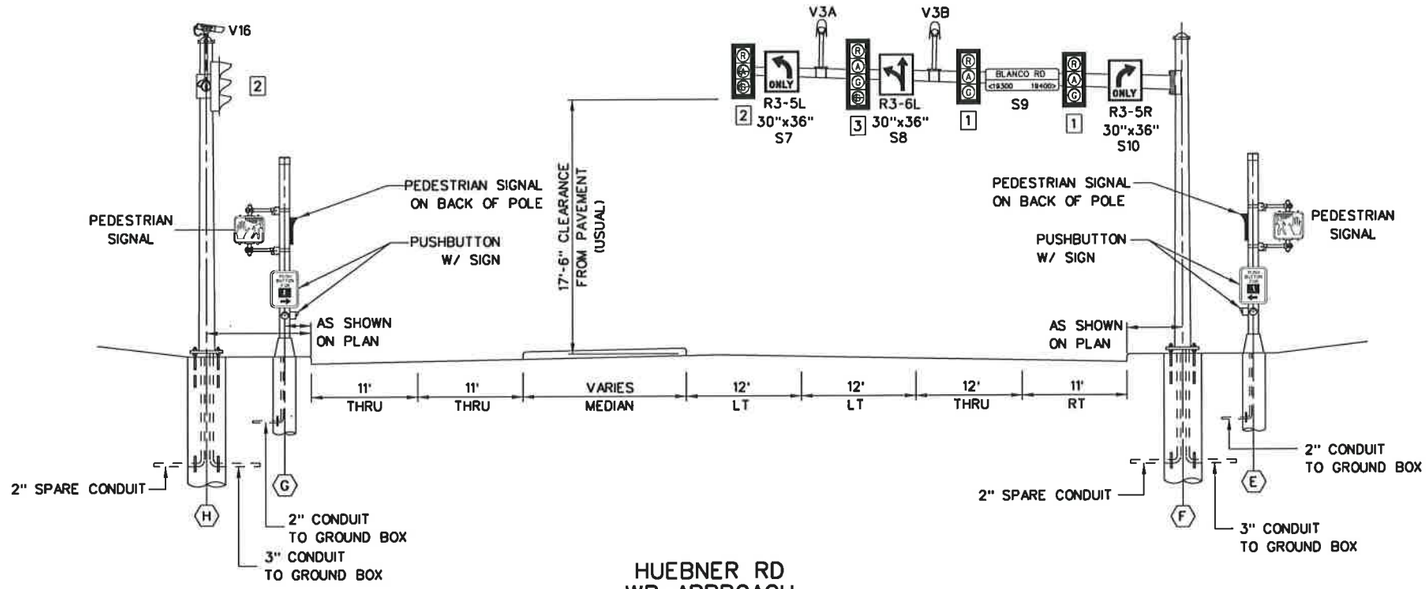

HUEBNER RD
WB APPROACH

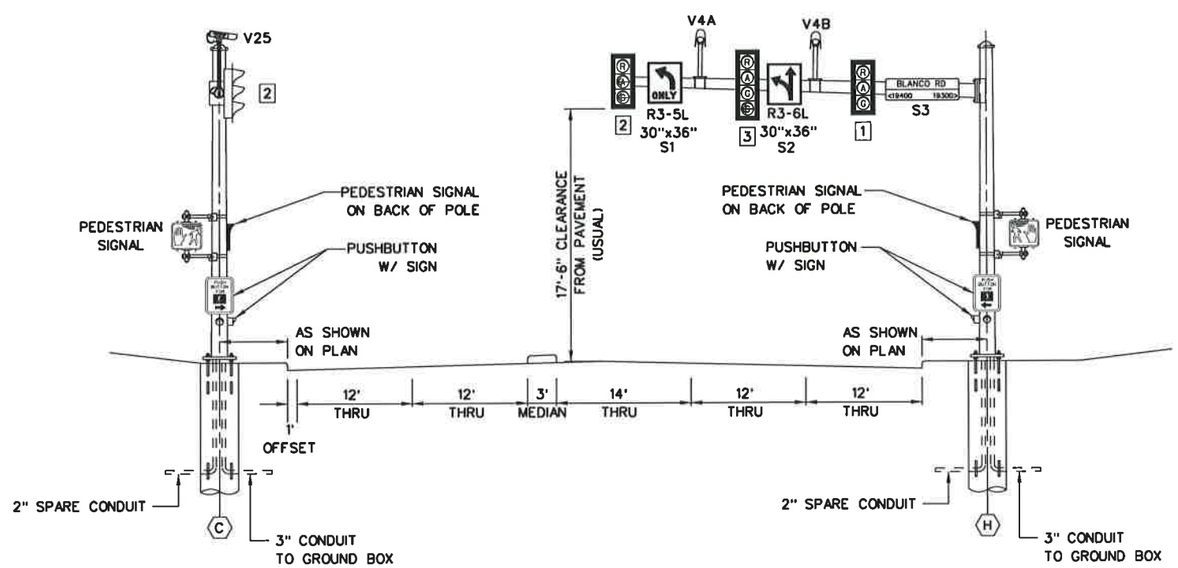

HUEBNER RD
EB APPROACH

STATE OF TEXAS
JOSE A. SANCHEZ
87890
LICENSED
PROFESSIONAL ENGINEER

2007.12.07

JOSE A. SANCHEZ DATE

NO.	REVISION	BY	DATE

CP&Y Chiang, Patel & Yerby, Inc.

TEDSI INFRASTRUCTURE GROUP
Consulting Engineers
10999 IH 10 West • Suite 320
San Antonio, Texas 78230
(210) 858-0610

BEXAR COUNTY
PUBLIC WORKS DIVISION

F.M. 2696 (BLANCO ROAD)

TRAFFIC SIGNAL ELEVATIONS
BLANCO RD AT HUEBNER RD

SHEET 2 OF 2

Designed: RC	STATE	BEXAR COUNTY FILE NUMBER	PLAN SET NO.
Checked: JAS	TEXAS		646
Drawn: RC	COUNTY		OF
Checked: JAS	BEXAR		842

P:\2007\27958-1-Blanco Rd South\Design\CSJ\Traffic\Traffic Signals\61025SPROTL05.dgn
10:32:13 AM
12/7/2007

SIGNAL HEAD SCHEDULE

12" W/BACKPLATE — 1

PEDESTRIAN SIGNAL HEAD — 3

SIGN DETAILS

R3-5L 30"X36" S2

R3-5R 30"X36" S4, S6

R10-4bL (9" x 12")

R10-4bR (9" x 12")

WILDERNESS OAK <20000 — S1

BLANCO RD <20000 21000> — S3

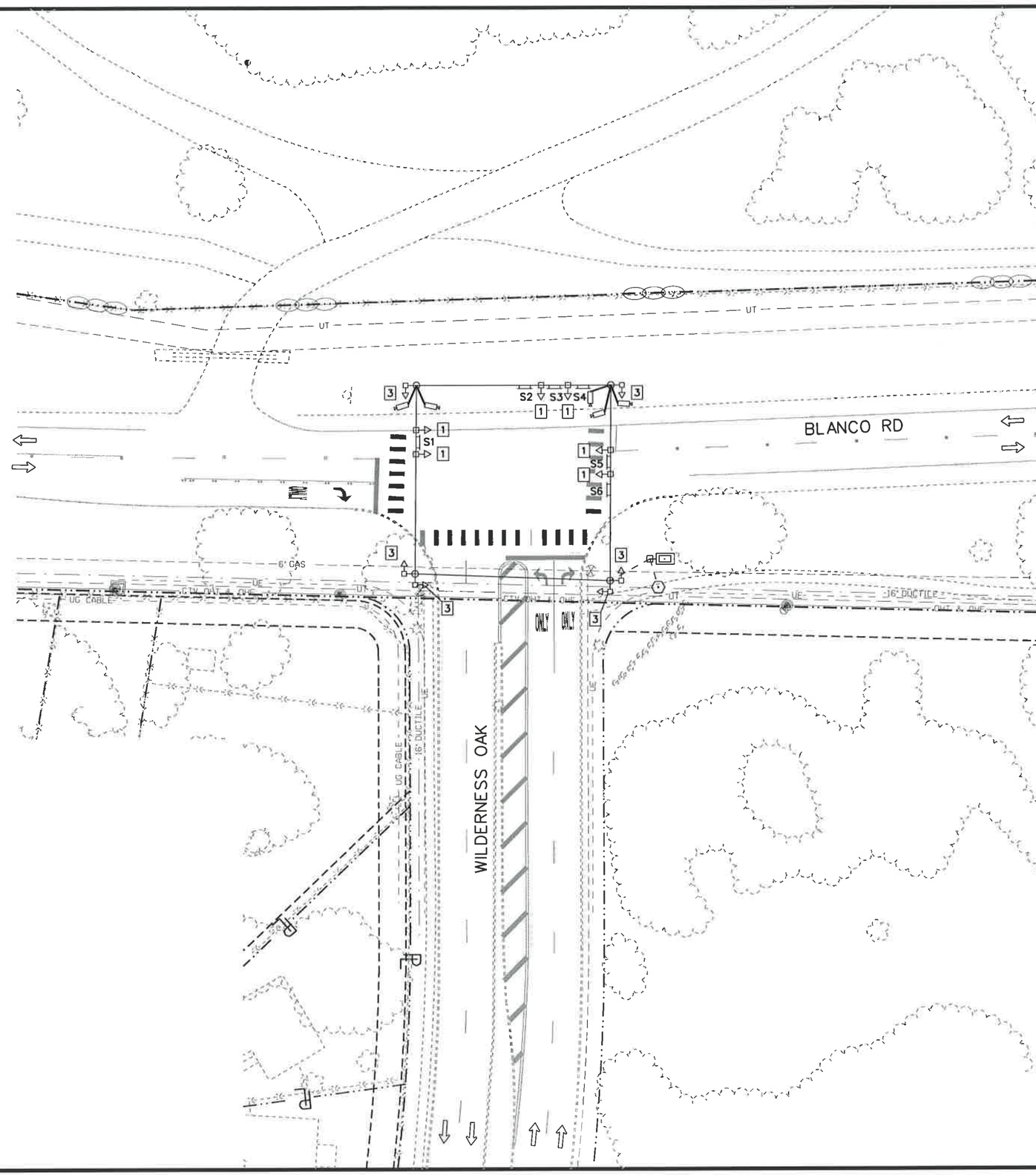

25 12.5 0 25 50
HORIZ. SCALE FEET

LEGEND

- WOODEN POLE
- SPAN WIRE
- VERTICAL SIGNAL HEAD
- PEDESTRIAN SIGNAL HEAD
- VIVDS CAMERA
- GROUND MOUNTED CONTROLLER CABINET
- ELECTRICAL SERVICE
- GROUND BOX
- OVHD SIGN MOUNTED ON SPAN WIRE
- CONDUIT
- LUMINAIRE ARM

NOTES:

INFORMATION SHOWN RELATIVE TO EXISTING UNDERGROUND UTILITIES AND CONDUITS IS BASED ON THE BEST AVAILABLE INFORMATION SUPPLIED BY TXDOT, LOCAL ENTITIES, VARIOUS UTILITY COMPANIES AND FIELD SURVEYS.

STATE OF TEXAS — JOSE A. SANCHEZ — 87890 — LICENSED — PROFESSIONAL ENGINEER

2007.10.26

JOSE A. SANCHEZ DATE

NO.	REVISION	BY	DATE

CP&Y Chiang, Patel & Yerby, Inc.

TEDSI INFRASTRUCTURE GROUP
Consulting Engineers
10999 IH 10 West • Suite 320
San Antonio, Texas 78230
(210) 858-0610

BEXAR COUNTY
PUBLIC WORKS DIVISION

F.M. 2696 (BLANCO ROAD)

EXISTING SIGNAL LAYOUT

BLANCO RD AT WILDERNESS OAK

SHEET 1 OF 1

Designed: RC	STATE	BEXAR COUNTY FILE NUMBER	PLAN SET NO. 047
Checked: JAS	TEXAS		
Drawn: RC	COUNTY		OF
Checked: JAS	BEXAR		842

P:\2007\27958-1-Blanco Rd South\Design\CSJ\Traffic\Traffic Signals\61025SRDTL06.dgn
05:23:41 PM
2007.10.26

SIGNAL HEAD SCHEDULE

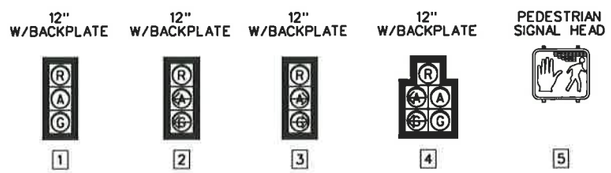

SIGN DETAILS

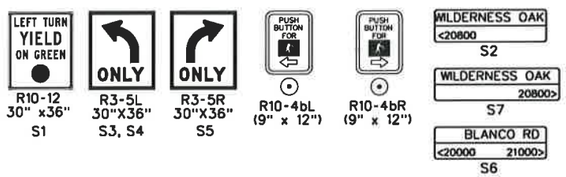

POLES/EQUIPMENT				
ITEM	DESIGNATION	FOUNDATION TYPE/DEPTH	STATION	OFFSET
A	TRAFFIC SIGNAL CONTROLLER AND CABINET	N/A	89+36	61.25'RT
B	PEDESTAL ELECTRICAL SERVICE	N/A	89+48	62'RT
C	SMA 32 - 80	30-A/12'	89+33	46'RT
D	SMA 36 - 80	36-A/14'	89+07	45.25'LT
E	SMA 40 - 80	36-A/14'	88+00	42.5'LT
F	PEDESTAL POLE	24-A/6'	88+11	63'RT
G	PEDESTAL POLE	24-A/6'	89+10	62.25'RT
H	EXISTING LUMINAIRE POLE	30"DIAM/8'	88+21	77.5'RT

CONDUIT AND CONDUCTOR SCHEDULE												
	CONDUIT/SPAN RUN NUMBER		1	2	3	4	5	6	7	8	9	10
	NUMBER OF CONDUITS		1/1	2	1/1	2	1	1	1	2	1/1	2
	CONDUIT SIZE IN INCHES		2/3	3	2/3	3	2	3	2	3	2/3	2
	LENGTH OF RUN (FT)		5	110	5	110	5	110	5	25	15	15
			T	T	T	T	T	T	T	T	T	T
AWG	CIRCUIT											
#14 7-COND IMSA CABLE	SIGNALS	C									1	
		D			2	2				2		
		E	1	1		1				1		
#14 9-COND IMSA CABLE	PED SIGNALS, PUSH BUTTONS	F					1	1		1		
		G							1	1		
#6 XHHW	120 VOLT: POWER HOT											1
	120 VOLT: POWER COMMON											1
#6 BARE	BARE COPPER BOND/GROUND											2
#8 BARE	BARE COPPER BOND/GROUND		2	2	2	2	1	1	1	2	2	
VIVDS #18 3-COND AND RG-59	VIVDS CAMERA	V16 (Ø1, Ø6)	1	1		1				1		
		V2A (Ø2 PRSC)								1		
		V8A (Ø8 PRSC)			1	1				1		
		V2B (Ø2 PULSE)								1		
		V6 (Ø6)	1	1		1				1		
		V8B (Ø8 PULSE)			1	1				1		
LUMINAIRE TRAY CBL 3/C-#12	LUMINAIRE											
INTER-CONNECT	FIBER OPTIC CBL S/M (12 STRAND) (TY A)			1		1				1		

"T" DENOTES TRENCH/"B" DENOTES BORE

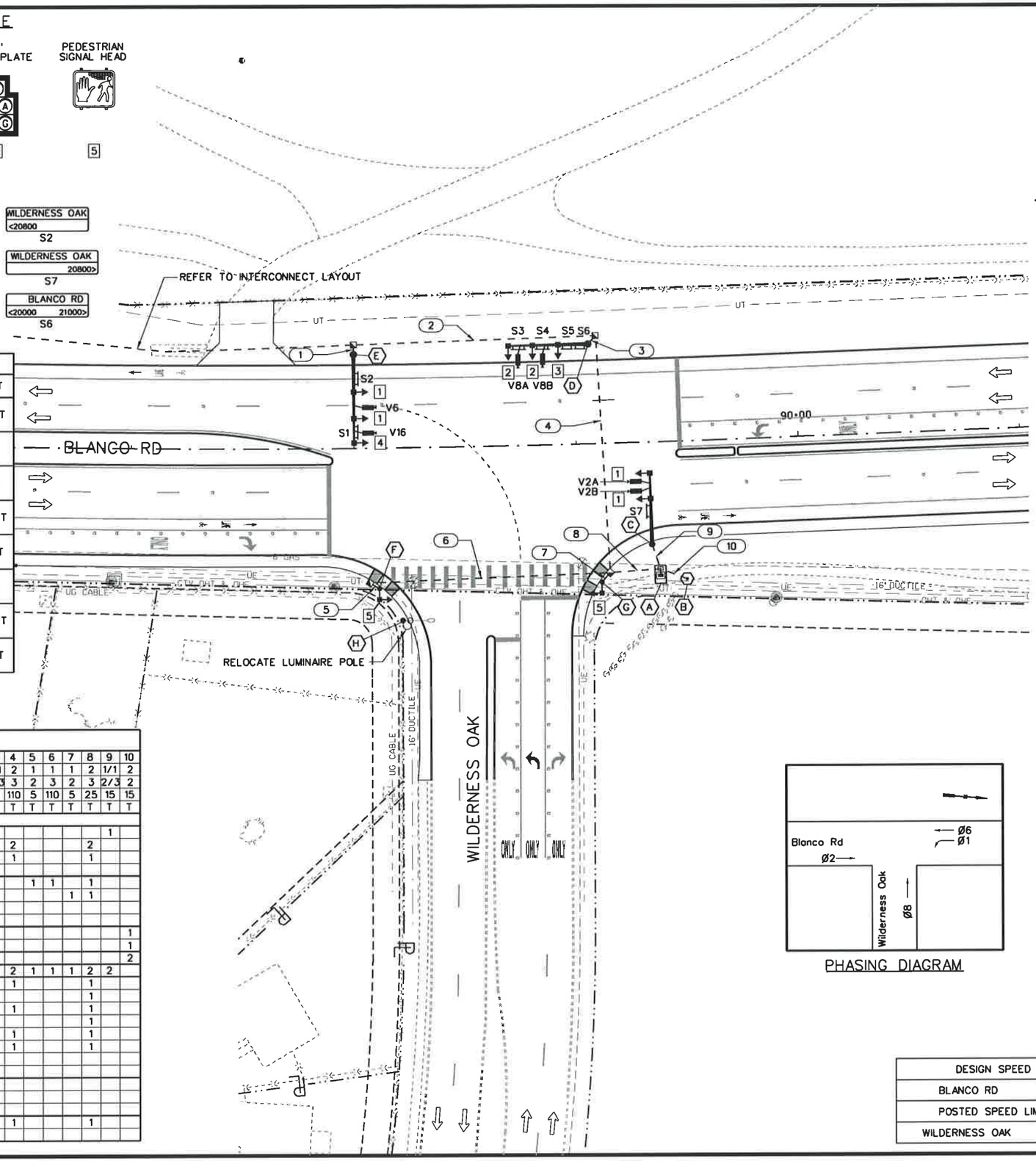

PHASING DIAGRAM

DESIGN SPEED	
BLANCO RD	45 MPH
POSTED SPEED LIMIT	
WILDERNESS OAK	40 MPH

25 12.5 0 25 50
HORIZ. SCALE FEET

LEGEND

- MAST ARM POLE
- PEDESTAL POLE
- VERTICAL SIGNAL HEAD
- PEDESTRIAN SIGNAL HEAD W/PUSHBUTTON & SIGN
- VIVDS CAMERA W/EXTENSION ROD ON MAST ARM
- GROUND MOUNTED TY 332 CABINET/FOUNDATION
- ELECTRICAL SERVICE PEDESTAL CABINET
- GROUND BOX (TYPE D) W/APRON
- OVERHEAD SIGN MOUNTED ON MAST ARM
- CONDUIT (SIZE AND TYPE AS SPECIFIED)
- WIRE RUN DESIGNATION

NOTES:

1. CONTRACTOR TO EXPOSE UTILITES WITHIN A 5 FT RADIUS PRIOR TO CONSTRUCTION OF PROPOSED DRILLED SHAFT FOUNDATIONS AND MAKE NECESSARY PLACEMENT ADJUSTMENTS IN THE FIELD.
2. CONFIRM COMPLETION OF RELOCATION OF EXISTING UTILITIES BEING PERFORMED BY OTHERS PRIOR TO EXCAVATION FOR DRILLED SHAFT FOUNDATIONS.
3. COORDINATE VIVDS CAMERA CONNECTIONS AND DETECTION ZONE PROGRAMMING WITH CITY OF SAN ANTONIO TRAFFIC OPERATIONS PERSONNEL.

STATE OF TEXAS
JOSE A. SANCHEZ
87890
LICENSED
PROFESSIONAL ENGINEER

JOSE A. SANCHEZ 2007.10.26
DATE

NO.	REVISION	BY	DATE

CP&Y Chiang, Patel & Yerby, Inc.

TEDSI INFRASTRUCTURE GROUP
Consulting Engineers
10999 IH 10 West • Suite 320
San Antonio, Texas 78230
(210) 858-8610

BEXAR COUNTY
PUBLIC WORKS DIVISION

F.M. 2696 (BLANCO ROAD)

PROPOSED SIGNAL LAYOUT

BLANCO RD AT WILDERNESS OAK

SHEET 1 OF 1

Designed: RC	STATE	BEXAR COUNTY FILE NUMBER	PLAN SET NO. 668
Checked: JAS	TEXAS		
Drawn: RC	COUNTY		OF 842
Checked: JAS	BEXAR		

P:\2007\27958-1-Blanco Rd South\Design\CSJ\Traffic\Traffic Signals\6102SSR01.07.dgn
05:23:57 PM
2007.10.26

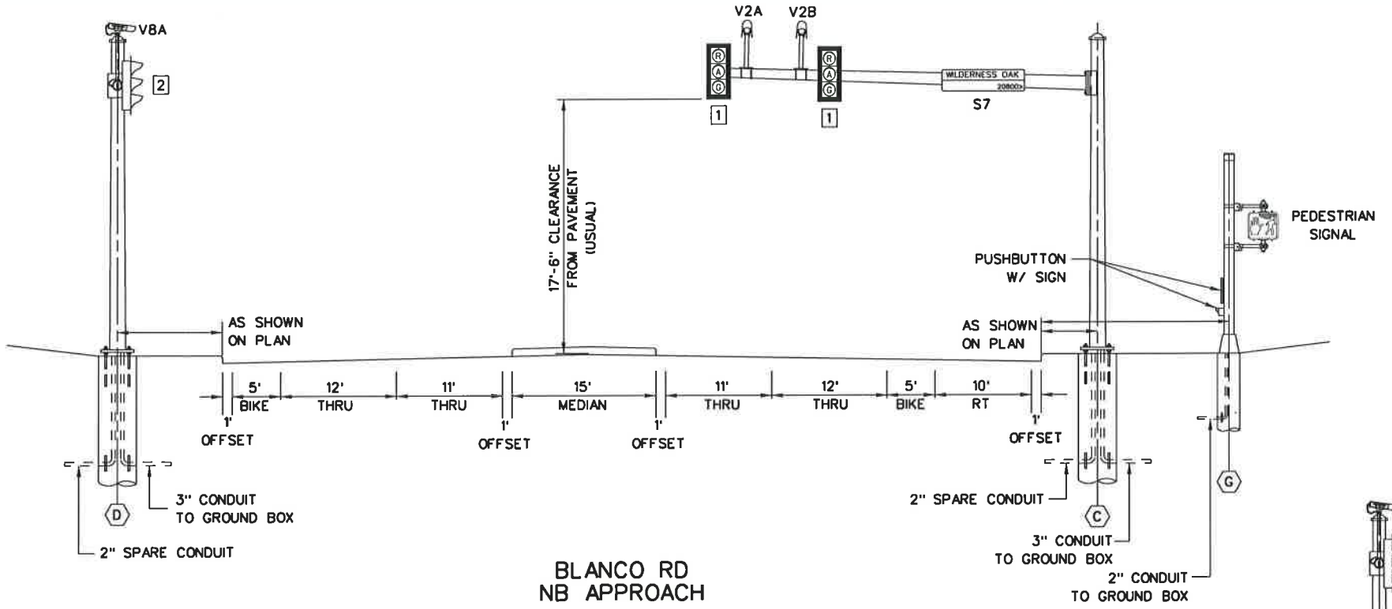

BLANCO RD
NB APPROACH

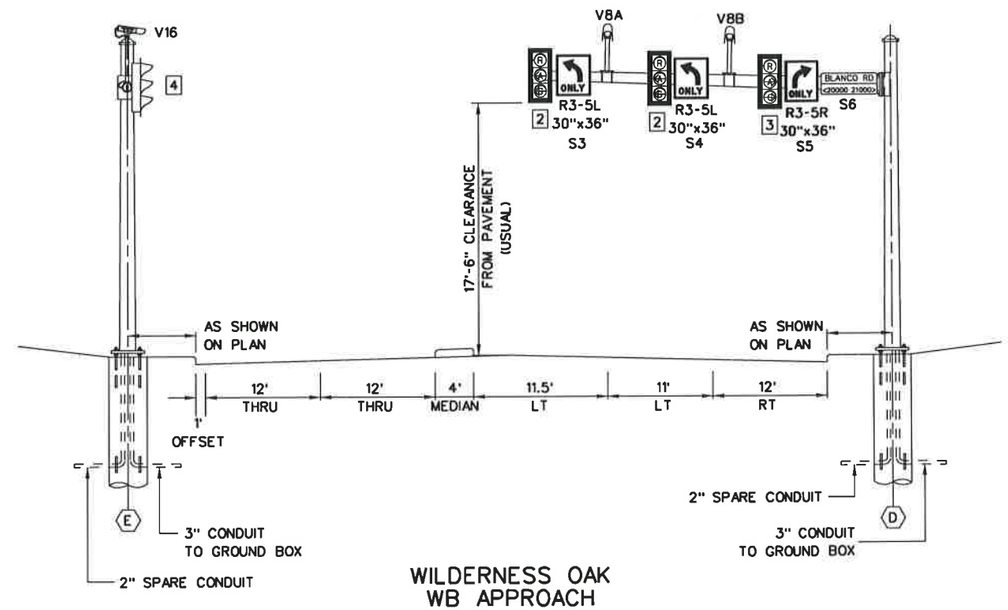

WILDERNESS OAK
WB APPROACH

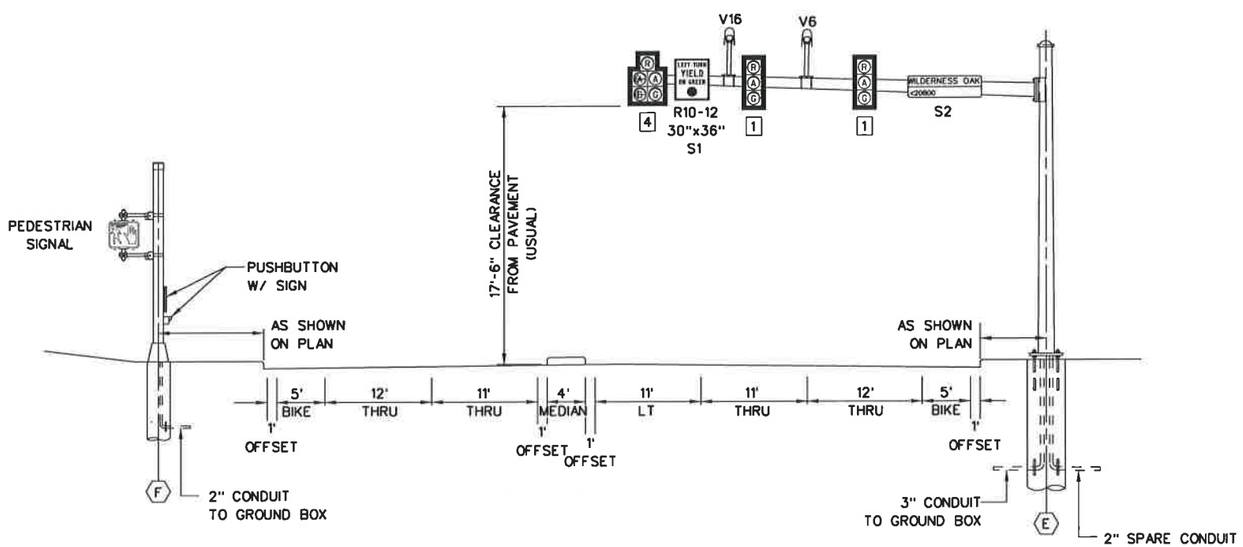

BLANCO RD
SB APPROACH

STATE OF TEXAS
JOSE A. SANCHEZ
87890
LICENSED
PROFESSIONAL ENGINEER

JOSE A. SANCHEZ

2007.10.26
DATE

NO.	REVISION	BY	DATE

CP&Y Chiang, Patel & Yerby, Inc.

TEDSI INFRASTRUCTURE GROUP
Consulting Engineers
10999 IH 10 West • Suite 320
San Antonio, Texas 78230
(210) 558-6610

BEXAR COUNTY
PUBLIC WORKS DIVISION

F.M. 2696 (BLANCO ROAD)

TRAFFIC SIGNAL ELEVATIONS
BLANCO RD AT WILDERNESS OAK

SHEET 1 OF 1

Designed: RC	STATE	BEXAR COUNTY FILE NUMBER	PLAN SET NO. 669
Checked: JAS	TEXAS		OF 842
Drawn: RC	COUNTY		
Checked: JAS	BEXAR		

P:\2007\27958-1-Blanco Rd South\Design\CSJ\Traffic\Traffic Signals\6102SSRDTL08.dgn
05:24:07 PM
2007.10.26

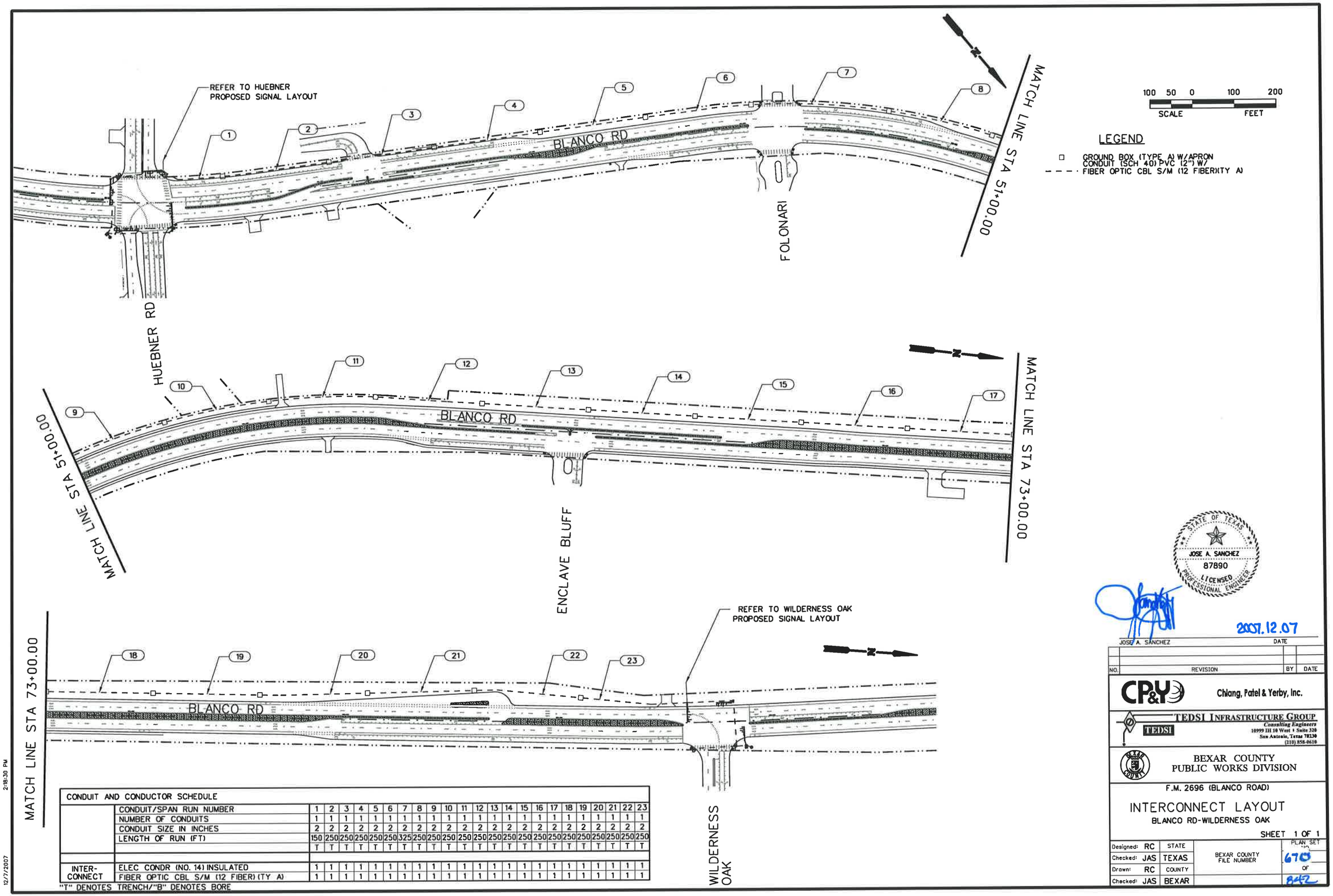

CONDUIT AND CONDUCTOR SCHEDULE

	CONDUIT/SPAN RUN NUMBER	1	2	3	4	5	6	7	8	9	10	11	12	13	14	15	16	17	18	19	20	21	22	23
	NUMBER OF CONDUITS	1	1	1	1	1	1	1	1	1	1	1	1	1	1	1	1	1	1	1	1	1	1	1
	CONDUIT SIZE IN INCHES	2	2	2	2	2	2	2	2	2	2	2	2	2	2	2	2	2	2	2	2	2	2	2
	LENGTH OF RUN (FT)	150	250	250	250	250	250	325	250	250	250	250	250	250	250	250	250	250	250	250	250	250	250	250
		T	T	T	T	T	T	T	T	T	T	T	T	T	T	T	T	T	T	T	T	T	T	T
INTER-CONNECT	ELEC CONDR (NO. 14) INSULATED	1	1	1	1	1	1	1	1	1	1	1	1	1	1	1	1	1	1	1	1	1	1	1
	FIBER OPTIC CBL S/M (12 FIBER) (TY A)	1	1	1	1	1	1	1	1	1	1	1	1	1	1	1	1	1	1	1	1	1	1	1

"T" DENOTES TRENCH/"B" DENOTES BORE

DISCLAIMER
The use of this standard is governed by the "Texas Engineering Practice Act". No warranty of any kind is made by TxDOT for any purpose whatsoever. TxDOT assumes no responsibility for the conversion of this standard to other formats or for incorrect results or damages resulting from its use.

I. GENERAL REQUIREMENTS FOR ALL ELECTRICAL WORK

The location of all conductors, conduits, junction boxes, ground boxes, and electrical services is diagrammatic only and may be shifted by the Engineer to accommodate local conditions.

Materials shall be new and unused. Materials and installation shall comply with the applicable provisions of the National Electrical Code (NEC), National Electrical Manufacturers Association (NEMA) standards, and shall be Underwriters Laboratories (UL) Listed unless otherwise shown on the plans or specifications or approved by the Engineer in writing. Faulty fabrication or poor workmanship in any material, equipment, or installation shall be justification for rejection. When reference is made to UL, it can be considered to mean a Nationally Recognized Independent Testing Lab (NRTL). Comparable standards of Canadian Standard Association, Electrical Testing Laboratories or Factory Mutual can be equal to the referenced UL standard. Where reference is made to NEMA listed devices, IEC listed devices shall not be considered to be an acceptable equal to a NEMA listed device. Acceptable devices may have both a NEMA and IEC listing.

With the exception of high strength bolts, miscellaneous nuts, bolts and hardware may be stainless steel when plans specify galvanized, provided that bolts are 1/2 inch or less in diameter. The Contractor shall provide the following electrical test instruments as required by the Engineer to confirm compliance with the contract and the NEC. Those test instruments are voltmeter, amp probe, megger (1000 volt DC) and torque wrenches. All meters shall have been properly calibrated within one year. Calibration certification shall be provided to the Engineer upon request. Calibration certification tag shall also be applied to the meter. The Contractor shall operate meters during inspection as requested by the Engineer. Grounding shall be as shown on the plans and in accordance with the NEC. Metallic conduit, light poles, luminaires on bridge structures, and all metal enclosures shall be bonded to the system-grounding conductor. The ground rod in each ground box or junction box at the bridge ends, and in each ground box installed for underpass lighting will also be bonded to the system grounding conductor. The grounding conductor shall be bare or, if insulated, shall be green. Ground rods, connectors, and bonding jumpers will not be paid for separately, but will be subsidiary to the various bid items.

SUBMITTALS:

The contractor shall submit for approval six (6) copies of catalog cut sheets for each of the following three (3) categories.
Category 1. Electrical services including photocell.
Category 2. Breakaway disconnects, heat shrink tubing, heat shrink filler tape, GelCaps and ground boxes which will include loading capacity certification.
Category 3. Highmast assembly kits, when applicable. See Item 614 "Highmast Illumination Assemblies". Submittals shall be legible and shall be marked to indicate which product on a cut sheet is to be supplied. Where manufacturers provide warranties and guarantees as a customary trade practice, the Contractor shall furnish to the State such warranties and guarantees.
Any deviation from plans or specifications, including deviations due to plan error should be prominently displayed on the submittal. Any changes not prominently noted in submittal and incorporated into the work without proper authorization will constitute grounds for rejection of that portion of the work.

II. CONDUIT

A. MATERIALS

1. Conduit and fittings shall be UL Listed for the intended use shown on plan sheets.
2. Conduit shall be the type shown by descriptive code or shown elsewhere on the plans. Substitution of the various types of conduits will not be permitted. All flexible conduit in rigid metallic conduit (RMC) systems shall be Liquidtight Flexible Metal (LFMC) conduit. All flexible conduit in PVC systems shall be Liquidtight Flexible Non-metallic conduit (LFNC).
3. All exposed conduits shall be RMC, unless otherwise specifically shown on the plans. All metal conduit shall be properly grounded.
4. Couplings, connectors, conduit bodies, grounding bushings, and offset nipples for RMC shall be electro-zinc plated steel or hot dipped galvanized malleable iron, threaded or threadless compression type, rain-tight and shall be UL listed for the intended use.
5. Expansion joints for metal conduit shall be provided with an internal or external bonding jumper and shall be UL listed.
6. Unless otherwise shown on the plans, junction box minimum sizes shall be in accordance with the following table which applies to the greatest number of conductors entering the box through one conduit with no more than four conduits per box. When a mixture of conductor sizes are present, the conductors shall be counted as if all are of the larger size. Situations not applicable to the table shall be sized in accordance with NEC 370-28.

AWG	3 CONDUCTORS	5 CONDUCTORS	7 CONDUCTORS
#1	10" x 10" x 4"	12" x 12" x 4"	16" x 16" x 4"
#2	8" x 8" x 4"	10" x 10" x 4"	12" x 12" x 4"
#4	8" x 8" x 4"	10" x 10" x 4"	10" x 10" x 4"
#6	8" x 8" x 4"	8" x 8" x 4"	10" x 10" x 4"
#8	8" x 8" x 4"	8" x 8" x 4"	8" x 8" x 4"

7. RMC system junction boxes equal to or smaller, in any dimension, than 12 x 12 x 6 (HxWxD), surface mounted and containing conductors #8 or larger, shall be hot dipped galvanized cast iron with minimum wall thickness of 3/16 inch, shall have external mounting lugs, and shall be UL listed Crouse-Hinds Type WAB, OZ/Gedney Type YS or approved equal. Unless otherwise shown elsewhere on the plans, RMC system junction boxes larger than the aforementioned boxes but equal to or smaller, in any dimension, than 18 x 18 x 6 (HxWxD) shall be 14-ga. stainless steel; RMC system junction boxes larger than 18 x 18 x 6 (HxWxD) shall be 12-ga. stainless steel. All metal junction boxes shall be equipped with a threaded hole or lug for grounding. Stainless steel boxes 12 x 12 x 6 and larger need not be UL Listed but shall meet the other requirements of the NEC and shall have ribs, stiffeners, or thicker metal and shall have external mounting feet. Junction boxes with an internal volume of more than 100 cu. in. may be supported by connection of two or more rigid metal conduits, where specifically shown on the plans or where approved by the Engineer.
8. Junction boxes containing only #10 or #12 AWG conductors shall be Crouse Hinds Type GRFX, Appleton Type JBOX, two-gang FD, or similar approved cast iron box. Boxes shall be sized according to NEC Table 370-16(a).
9. IMC and EMT conduit shall not be used unless specifically required by the plan layout sheets. Junction boxes in EMT conduit systems shall be made from galvanized sheeting and shall be UL listed and approved for outdoor use, unless otherwise noted on the plans. Sheet metal junction boxes shall be sized in accordance with the NEC. Junction boxes for IMC conduit systems shall meet the requirements of boxes used with RMC systems.
10. Junction boxes in PVC conduit systems shall be PVC, intended for outdoor use, unless otherwise noted on the plans.
11. Elbows in PVC conduit systems one inch and larger shall be rigid metal, with the exception of traffic signal systems which may have PVC elbows instead of rigid. If any part of the rigid metal elbow is buried less than 18 inches underground the elbow and rigid metal extension shall be grounded. Grounding shall be accomplished by means of a grounding bushing installed on the extension. Unless specifically shown on the plans, rigid metal elbows containing, or entering ground boxes containing only communications conductors, loop detectors, or other low voltage power limited circuits need not be grounded unless a ground wire is present in the conduit or ground box. The rigid metal elbows located in concrete foundations may be extended with PVC conduit and need not be grounded provided that the end of the elbow nearest the end of the conduit run exiting the foundation is at least 2 inches below the concrete. RMC elbows will not be eliminated. RMC elbows will not be paid for directly, but will be subsidiary to various bid items.
12. High-Density Polyethylene (HDPE) conduit shall meet the requirements of Item 622, Duct Cable, except that the HDPE conduit, when bid under Item 618, Conduit, shall not contain factory installed conductors. Fittings for HDPE conduit shall be UL listed as an electrical conduit connector or shall be thermally fused using an electrically heated wound wire resistance welding method. HDPE conduit may be substituted for bored schedule 40 or schedule 80 PVC conduit. When such substitution is made, bored HDPE shall be schedule 40 of the size PVC being replaced. The HDPE conduit shall transition to PVC (or RMC elbow when required) at the bore pit. Size and schedule shall be as shown on the plans. Substituted conduit may not be extended to ground boxes or foundations; RMC elbows shall be installed at ground boxes and foundations. RMC elbows will not be eliminated.
13. All conduit support hardware including straps, nuts, bolts, screws, retaining anchors and washers shall be hot dipped galvanized or stainless steel. Strut type conduit straps shall be stainless steel or hot dipped galvanized. Strut type straps need not be made of malleable type material. Stamped-cadmium plated straps will not be allowed. Straps having only one mounting hole shall not be allowed for use on conduits 2 inches and larger with the exception of electrical service poles where stainless steel standoff straps will be allowed. Two piece conduit straps designed to be used with a mounting shoe shall be installed only with the correctly sized shoe.

B. CONSTRUCTION METHODS

1. Conduit in structures shall have expansion fittings at structure expansion joints. All straight runs of RMC conduit exposed on structures such as bridges shall have expansion joints installed at maximum intervals of 150 feet. Expansion joints shall be installed so they allow for movement of the conduit. Installation of the joint in such a manner that will not allow for movement shall be repaired at no expense to the state. The method of determining the final setting length of the expansion joint shall be provided to the Engineer upon request.
2. Conduit supports shall be spaced at maximum intervals of 5 feet. Conduit spacers shall be used with metal conduit placed on surfaces of concrete structures (See conduit mounting options).
3. Conduit supports shall not be attached directly to prestressed concrete beams except as shown specifically in the plans and approved by the Engineer.
4. Unless otherwise shown on the plans, conduit placed beneath existing roadways, driveways, or sidewalks, or after the base or surfacing operation has begun, shall be accomplished by jacking or boring. The Contractor shall back fill and compact the bore pits to the bottom of the conduit prior to installing connecting conduit or duct cable to prevent bending of the connection.
5. Conduit trenched in the subgrade of new roadways shall be backfilled with excavated material, unless otherwise noted on the plans. Conduit trenched in the sub-base of new roadways shall be backfilled with cement-stabilized base.
6. Open ends of all conduit and raceways shall be fitted with temporary caps or plugs to prevent entry of dirt, debris and rodents during construction. The temporary cap may be constructed of duct tape, but in all cases shall be tightly fixed to the conduit and shall be durable. The contractor shall clean out the conduit and prove it clear in accordance with Standard Specifications Item 618.3 prior to installing any conductors.
7. Conduit entry into the top of enclosures such as safety switches, meter cans, service enclosures, auxiliary enclosures and junction boxes shall be made weatherproof using conduit sealing hubs, or threaded bosses.
8. A bonding jumper shall be installed from each grounding bushing to the nearest grounding rod, grounding lug, and/or equipment grounding conductor. All jumpers shall be the same size as equipment grounding conductor. Conduit used as casing under roadways for duct cable need not be grounded if duct extends full length through the casing. At electrical services, grounding electrode conductor shall be a solid Copper #6 AWG.
9. Metal junction boxes shall be bonded to the grounding conductor in accordance with the NEC.
10. Conduits entering ground boxes shall be placed so that the conduit ends shall be not less than 3 inches nor more than 6 inches from bottom of box (See ground box detail on sheet ED(3).
11. Conduit ends shall be sealed with heat shrink boots with waterproof sealant, urethane foam, or by other methods approved by the Engineer. Sealing shall be done after completion of any required pull tests. Duct tape shall not be used as a permanent conduit sealant. Silicone caulking shall not be used as a sealant.
12. All strut mounting material and hardware shall be hot-dip galvanized or shall be stainless steel. The cut ends of strut and non-galvanized rigid metal conduit threads shall be coated with a zinc rich paint (90% or more zinc content). Zinc rich paint may only be used to touch up galvanized material as allowed under Item 445.6 galvanizing. The painting of non-galvanized material with a zinc rich paint shall not be considered as an approved alternative for galvanized materials.
13. All PVC conduit terminations shall be fitted with bushings or bell ends. All metal conduit terminations shall be fitted with a grounding type bushing.

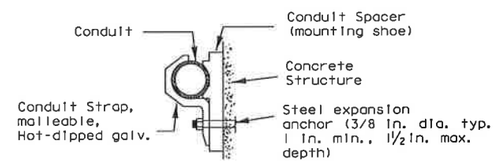

CONDUIT MOUNTING OPTIONS

(Attachment to concrete surfaces)
(See para. II.B.2)

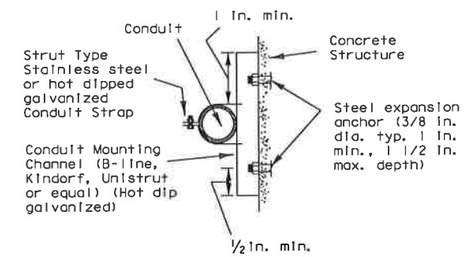

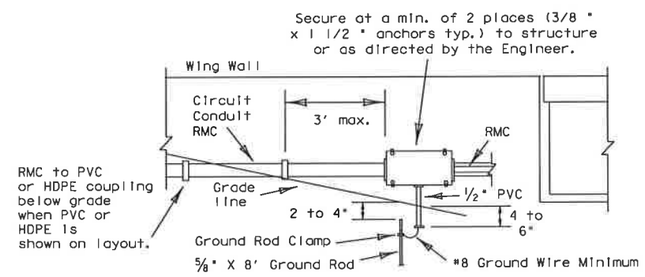

TYPICAL CONDUIT ENTRY TO BRIDGE STRUCTURE DETAIL

NOTES

1.) Ground rod clamp to be UL listed for direct burial.
2.) For conduit placed in structure, use flush-mounted box.
3.) Bond junction box and metal conduits to equipment grounding conductor and grounding electrode conductor using listed connector.
4.) Seal all conduits entering the junction box from underground.
5.) Install bell end or bushing on 1/2 " PVC conduit both ends.
6.) Ground rod to be driven within 8 inches of 1/2 inch PVC conduit end.

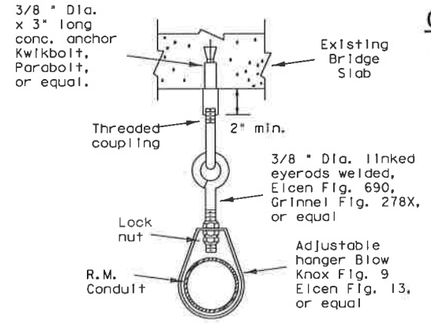

CONDUIT HANGER DETAIL

(Attachment to horizontal surfaces)
Hangers need not be UL listed for electrical use
ie: plumber pipe hangers are acceptable

5/03 Revision

⚠ Revised notes.

STANDARD PLANS
TEXAS DEPARTMENT OF TRANSPORTATION
Traffic Operations Division

ELECTRICAL DETAILS-CONDUIT

ED(1)-03

©TxDOT January 1992	DN:- KB	CK:- JW	DW:- DN	CK:- GC	NCG NO.:-
REVISIONS 4-98 12-00 3-03 5-03	STATE DISTRICT SAT	FEDERAL REGION 6	FEDERAL AID PROJECT		SHEET 671
	COUNTY BEXAR		CONTROL 2708	SECTION 01	JOB 022, ETC	HIGHWAY FM2696

DN: CK: DW: CK:
DATE: ACC: FILE:
LEVELS DI

DISCLAIMER
The use of this standard is governed by the "Texas Engineering Practice Act". No warranty of any kind is made by TxDOT for any purpose whatsoever. TxDOT assumes no responsibility for the conversion of this standard to other formats or for incorrect results or damages resulting from its use.

I. ELECTRICAL CONDUCTORS

A. MATERIALS

1. Insulated conductors shall be NEC Type XHHW. Insulated conductors shall be color coded in accordance with the NEC, articles 200, 250, and 310; i.e. insulation of grounded conductors (neutrals) shall be white. Grounding conductors (ground wires) shall be bare or insulation shall be green. Insulation of ungrounded conductors (hots) shall be any color except green, white, or gray. Identification of conductors #6 American Wire Guage (AWG) and smaller shall be by continuous jacket color. Color coding of electrical conductors #4 AWG and larger shall be either by continuous color jacket or by colored tape. Colored tape marker shall consist of a half-lap of tape covering a 6-inch length of conductor.
2. Where two or more circuits are present in one conduit or enclosure, the conductors of each circuit shall be identified by a permanent non-metallic tag at each accessible location. The tag shall be fastened to the conductors by two plastic straps. Each tag shall indicate circuit number, letter, or other identification shown in the plans.
3. Grounding electrode conductor #6 AWG for bonding to ground rod at electrical service, shall be solid. Connection of conductor to ground rod shall be made using UL Listed connectors designed for such purposes.
4. Heat Shrink Tape filler shall be used to seal the ends of heat shrink tubing around two or more conductors that are insulated with heat shrink tubing. Tape material shall have a minimum dielectric strength of 225 volts per mil and shall be cross-linked butyl rubber. Tape shall be supplied in rolls and shall have a backing (release paper) to prevent the tape from sticking to itself.
5. Heat shrink tubing shall be heavy wall, UL listed for 600 volts or greater and shall have factory applied internal sealant.
6. GelCaps shall be UL listed for 600-volt applications. GelCap shall have see-through elastomer molded cover. Cover shall be filled with high dielectric insulating gel silicone sealant to provide waterseal. Cover shall be held in place by snap-lock, molded clamp made of UV stable polypropylene.
7. Splicing materials, insulating materials, breakaway disconnects, GelCaps and fuse holders will not be paid for directly but shall be subsidiary to various bid items.

B. CONSTRUCTION METHODS

1. After conductors have been installed in conduit, a pull test shall be made on conductors. When any length of conductor cannot be freely pulled, the Contractor shall make any needed alterations or repairs at no expense to the State.
2. The Contractor shall perform insulation resistance tests in accordance with item 620, "Electrical Conductors." The Contractor shall coordinate with the Engineer to witness the tests.
3. A sufficient length of conductor for making up connections shall be left in ground boxes (2 feet minimum, 3 feet maximum, to point of splice, 3 feet minimum, 4 feet maximum, when conductor is pulled through with no splice), enclosures, weatherheads and pole bases (1 foot minimum, 1.5 feet maximum).
4. Splices shall be made only in junction boxes, ground boxes, pole bases, or electrical enclosures and shall be made with listed compression or screw type pressure connectors, terminal blocks, bolted lugs, or split bolt connectors. Splices shall be insulated with heavy wall heat shrink tubing or GelCaps and shall be made so as to provide a watertight splice. Heat shrink sleeve shall overlap conductor insulation a minimum of 2 inches on both sides of the splice. Where heat shrink tubing may not shrink sufficiently to provide a watertight seal around the individual conductors, prior to heating the tubing, the Contractor shall increase the diameter of the conductors insulation using heat shrink filler tape to provide a watertight seal between the individual conductors and the heat shrink tubing. Tape shall be visible after completion of all splices. Where filler tape is used but not visible, the Engineer shall approve each individual splice by conducting a physical inspection of each splice. When it appears the tubing has been burned, or overheated the tubing shall be considered to be defective and shall be replaced.
5. GelCaps when used in place of heat shrink method of splicing, shall be sized and installed according to manufacturer's specifications. (Raychem GelCap and GelCap SL or equal.)
6. Wire nuts may be used for #8 AWG or smaller conductors in above-ground junction boxes, but not in pole bases or ground boxes. Wire nuts shall be positioned upright to prevent the accumulation of water. Wire nuts used at these locations shall have factory applied waterproof sealant.
7. Conductors in illumination poles shall be supported by a J-hook in the top of the pole.
8. All conductors bid under item 620 "Electrical Conductors" shall have breakaway electrical disconnects installed anytime conductors pass through a break-away support device.
9. For terminating the conductors, insulation-jacketing material shall be removed in such a manner as to not nick any of the individual strands of the conductor. When individual conductor strands are removed, the conductor shall be considered to be damaged.
10. When a conductor or cable has been damaged, or fails to pass an insulation resistance test, the conductor shall be replaced.
11. Duct tape, black electrical tape, or wire nuts shall not be used in the repair of a damaged conductor.
12. For terminations, no more than one wire may be installed under a single pressure connector, unless the device is listed for more than one wire.
13. Conductors connected to break-away in line fuse holders must be installed in accordance with the specific manufacturer's installation instructions. Where threaded connections are made, they shall be properly torqued. Where crimp type connections are made, crimps shall be made using properly sized crimping pliers. Proper conductor terminations are critical to the safe operation of break-away devices.
14. Waterproofing boots shall be properly trimmed to fit snugly around the conductor so as to provide a water proof connection. No more than one wire may enter a single opening in any one boot. Water proofing boots must provide the correct number of openings. Where only one wire is to be connected to a boot, the boot may not be a two wire type.

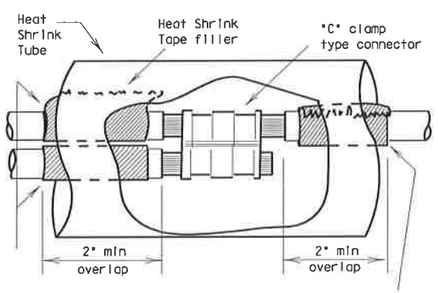

SPLICE OPTION 1

C-CLAMP

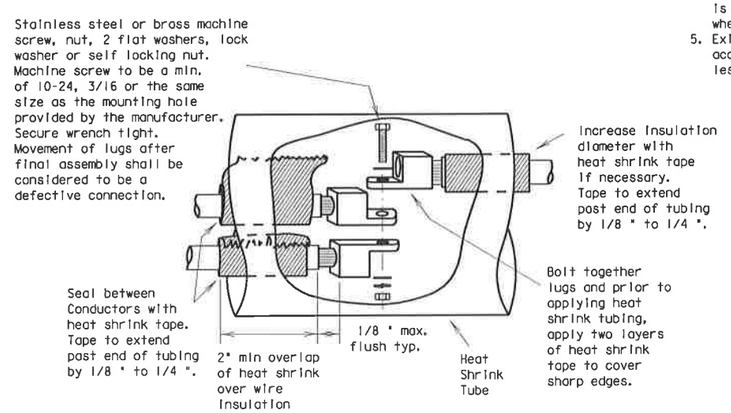

SPLICE OPTION 2

BOLTED WIRE LUGS

SPLICE OPTION 3

SPLIT BOLT

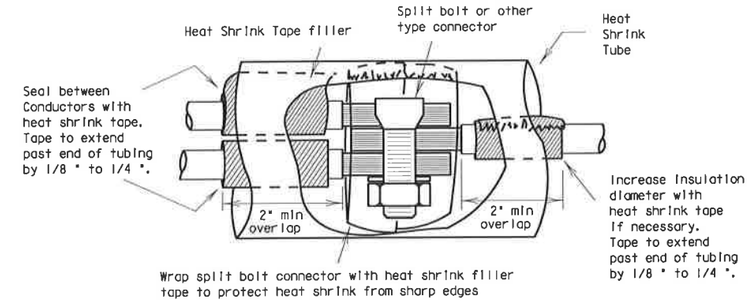

SPLICE OPTION 4

GELCAP

GelCap shall be sized and installed according to manufacturers specifications

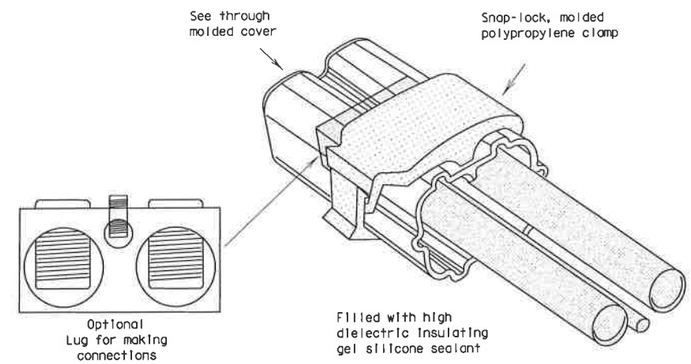

15. All conduits that contain circuit wiring of 50 volts or more shall contain an equipment grounding conductor (EGC). Conduit for traffic signals shall have an EGC, with a minimum size of #8 AWG stranded. Unless otherwise shown on the plans, the EGC for all other conduits shall be the same AWG size as the largest current carrying conductor contained in that conduit. The EGC shall be paid for item 620-Electrical Conductors.

C. TEMPORARY WIRING

1. Temporary conductors and electrical equipment to provide power for utilization equipment, shall be installed in accordance with the NEC article 305. All temporary wiring materials and methods shall comply with the standard sheets. All power outlets for portable electrical equipment, power tools, ice machines, ice storage bins and refrigerators located outdoors at grade, supplied from a utility power source, shall be provided with a ground fault circuit interrupter.
2. Residual current protective devices (GFCI) may be any one of the following: molded cord and plug set, receptacle, or circuit breaker type.
3. Where wire nuts are approved for temporary wiring, they shall be of the self-sealing type.
4. All conductor splices must be contained within a listed enclosure, ground box or the splices will be more than ten feet above grade vertically and more than five feet horizontally from any metal structure. Where temporary conductors are installed in any area that is likely to be subjected to vehicle traffic, or mobile construction equipment, the vertical clearance to ground shall be at least 18 feet when measured at the lowest point. Where power conductors are to be supported by a span wire, the span wire shall be properly grounded.
5. Existing conduit containing service conductors uncovered during the construction process shall be repaired in a timely manner in accordance with the NEC. Existing non-metallic conduit exposed during construction shall not be left exposed above grade, or with less than eighteen inches of cover, without protective methods approved by the Engineer.

STANDARD PLANS
TEXAS DEPARTMENT OF TRANSPORTATION
Traffic Operations Division

ELECTRICAL DETAILS-CONDUCTORS

ED(2)-03

©TxDOT January 1992	DN: KB	CK: JW	DW: DN	CK: GC		
REVISIONS 10-93 4-98 12-00 3-03	STATE DISTRICT: SAT	FEDERAL REGION: 6	FEDERAL AID PROJECT			SHEET 672
	COUNTY: BEXAR		CONTROL: 2708	SECTION: 01	JOB: 022, ETC	HIGHWAY: FM2696

DN: CK: DW: CK:
DATE: ACC: FILE:
LEVELS DN

DISCLAIMER
The use of this standard is governed by the "Texas Engineering Practice Act". No warranty of any kind is made by TxDOT for any purpose whatsoever. TxDOT assumes no responsibility for the conversion of this standard to other formats or for incorrect results or damages resulting from its use.

II. GROUND RODS

A. MATERIALS

1. All ground rods installed at electrical services, including supplemental lightning protection ground rods specified by the plans in other locations such as pole bases, shall be copper clad and UL listed. Rods shall be a minimum diameter of 5/8 inch. The length shall be a minimum of 8 feet. Larger diameter or longer length rods may be called for in some specific locations, see the individual plans sheets.
2. Ground rod clamps shall be listed to be in direct contact with the soil. Where concrete encasement is required, the clamp shall be listed for concrete encasement.

B. CONSTRUCTION METHODS

1. Ground rods installed in locations such as pole bases, to provide supplemental lightning protection need not be totally in contact with the soil. Where called for in the plans, rods may be encased in soil or concrete or any combination of soil and concrete. When concrete encased, the connection of the conductor to the rod shall be readily accessible for inspection or repairs. When driven into the soil the upper end shall be between 2 to 4 inches below finished grade. Ground rods shall not be placed in the same drilled hole as a timber pole.
2. Ground rods shall be installed such that the end imprinted with the rod's part number is installed as being the upper end.
3. Non-conductive coatings such as concrete splatter shall be removed from the rod at the clamp location.
4. Routing of lightning protection ground rod wires shall be run as short and straight as possible. Where bends are required they shall have a minimum radius of four inches.
5. Unless specifically called for by the plans, conduits used for ground rod wires shall be non-metallic. Where metal conduits are specified, a grounding bushing and properly sized bonding jumper shall be provided and properly installed on each end.
6. Where rocky soil or a solid rock bottom is encountered when driving a ground rod and the horizontal trench placement method is the only viable solution, written authorization from the Engineer must be obtained.

III. GROUND BOX

A. MATERIALS

1. Ground boxes 16x30x24 inches (WxLxD) or smaller shall be polymer concrete of the type required by the descriptive code shown elsewhere. Larger ground boxes shall be as shown elsewhere in the plans.
2. All ground boxes and covers shall be permanently marked either by impress or by permanent ink, with manufacturer's model number and manufacturer's name or logo.
3. Covers shall be bolted down, and bolt holes in the box shall be arranged to drain dirt.
4. Ground box Types A, B, C, D & E shall meet the following requirements:
   a. Ground boxes and covers be manufactured from polymer concrete reinforced with continuous strands of woven or stitched borosilicate fiberglass cloth. The polymer concrete shall be made from catalyzed polyester resin, sand and aggregate, and shall have a minimum compressive strength of 11,000 psi. Polymer concrete containing chopped fiberglass or fiberglass reinforced plastic is not acceptable.
   b. Minimum inside dimensions shall be as follows (width x length x depth):
      Type A shall be 11.5 inches x 21 inches x 10 inches, (122311)
      Type B shall be 11.5 inches x 21 inches x 20 inches, (122322)
      Type C shall be 15.25 inches x 28.25 inches x 10 inches, (162911)
      Type D shall be 15.25 inches x 28.25 inches x 20 inches, (162922)
      Type E shall be 11.5 inches x 21 inches x 16 inches, (122317)
   c. Bottom edge of box or extension shall be footed with a minimum 1 1/4 inch flange.
   d. Ground boxes shall withstand 600 lbs. per sq. ft. applied over the entire sidewall with less than 1/4 inch deflection per foot length of box. Ground boxes and covers shall withstand a test loading of 20,000 lbs. over a 10 inch by 10 inch area centered on the cover with less than 1/2 inch deflection. Ground boxes and covers shall meet Western Underground Standards 3.6. Manufacturer shall supply certification by an independent laboratory or sealed by a Texas-Licensed Professional Engineer.
   e. Covers shall be 2 inch (nominal) thick polymer concrete. All hardware shall be stainless steel. Cover shall be secured with two 1/2 inch stainless steel bolts. Bolts shall be self-retaining and shall withstand a minimum of 70 ft-lbs. torque and shall have a minimum 750 lbs. straight pull out strength. Nuts shall be floating and shall provide a minimum of 1/2 inch movement from the center of the nut. Covers shall be skid resistant, minimum 0.5 coefficient of friction. Covers shall be interchangeable between manufacturers and shall conform to the dimensions shown herein. Unless otherwise approved by the Engineer, cover shall be legibly imprinted with the following words in minimum 1 inch letters:
      Ground Boxes containing wiring for traffic signals shall be labeled, Danger High Voltage Traffic Signal.
      Ground boxes containing wiring for illumination systems shall be labeled, Danger High Voltage Illumination.
      Ground boxes containing wiring for traffic management systems shall be labeled, Danger High Voltage Traffic Management.
      Ground boxes containing wiring for sign illumination systems shall be labeled, Danger High Voltage Sign Illumination.
      Ground boxes containing wiring for traffic signals that also contain illumination, powered by the signal electrical service, shall be labeled, Danger High Voltage Traffic Signal.

B. CONSTRUCTION METHODS

1. Ground boxes shall be set on a 9 inch (minimum) bed of aggregate from 3/4 " up to 2" in size. Aggregate shall be in place prior to setting box and conduits shall be capped. Any gravel or dirt in conduit shall be removed.
2. When required by item descriptive code, construction of an apron encasing a ground box including concrete and reinforcing steel shall not be paid for directly but shall be subsidiary to the ground box. Reinforcing steel may be field bent. Concrete for aprons shall be considered miscellaneous concrete for testing purposes. Aprons shall be cast in place.
3. Conduit holes may be cut in the walls of type B & D boxes at least 18 inches beneath the cover.
4. If, within the limits of this project, the Contractor must utilize an existing ground box equipped with a metal cover, the Contractor shall bond the cover to the grounding conductor with a 3 foot long flexible stranded jumper the same size as the grounding conductor. Connection of bonding jumper to metal ground cover shall not be paid for directly but shall be subsidiary to various bid items. The box(es) must be clearly shown on the plans with plan notes fully describing the work required.
5. If there are other ground boxes with metal Covers within the project limits but not involved in the contract, the Engineer may direct the Contractor to ground the covers, designating and identifying the specific boxes in writing. This work will be paid for separately.
6. Termination to metal ground box covers shall be made using a tank ground type lug.

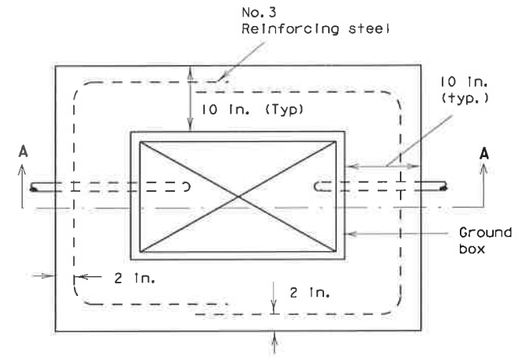

PLAN VIEW

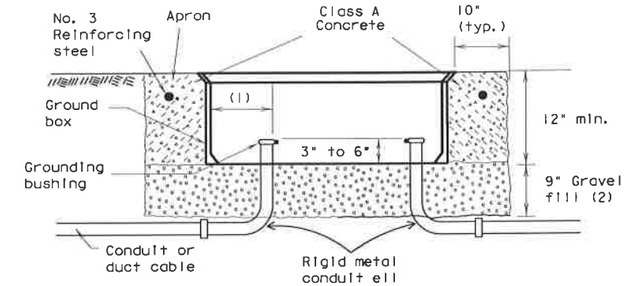

SECTION A - A

APRON FOR GROUND BOXES

(Where required)

(1) Final position of end of conduit shall not exceed one-half the distance to the side of box opposite the conduit entry.
(2) Place gravel "under" the box, not "in" the box. Gravel should not encroach on the interior volume of the box.
(3) Install bushing on the upper end of all ells.
(4) Where a ground rod is present in the ground box, connect it to any and all equipment grounding conductors using a listed connector.
(5) Maintain sufficient space between all conduits so as to allow for proper installation of bushings.
(6) All conduits shall be installed in a neat and workmanlike manner.
(7) All conduits installed in the ground box shall be sealed after completion of conductor installation and any required pull tests. Silicone shall not be used as sealant.

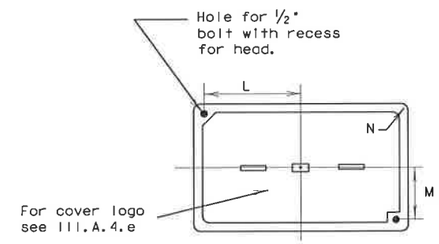

PLAN VIEW

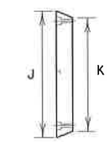

END

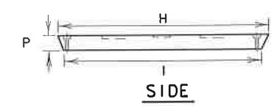

SIDE

GROUND BOX COVER

GROUND BOX COVER DIMENSIONS								
BOX	DIMENSIONS (INCHES)							
SIZE	H	I	J	K	L	M	N	P
A, B & E	23 1/4	23	13 3/4	13 1/2	9 7/8	5 1/8	1 3/8	2
C & D	30 1/2	30 1/4	17 1/2	17 1/4	13 1/4	6 3/4	1 3/8	2

5/03 Revision

⚠ Revised notes.

STANDARD PLANS
TEXAS DEPARTMENT OF TRANSPORTATION
Traffic Operations Division

ELECTRICAL DETAILS- GROUND BOXES

ED(3)-03

© TxDOT January 1992 DN:- KB CK:- JW DW:- DN CK:- GC

REVISIONS	STATE DISTRICT	FEDERAL REGION	FEDERAL AID PROJECT			SHEET
4-98	SAT	6				673
12-00	COUNTY		CONTROL	SECTION	JOB	HIGHWAY
3-03	BEXAR		2708	01	022, ETC	FM2696
5-03						

DN: CK: DW: CK:
DATE: ACC: FILE:
LEVELS D

DISCLAIMER
The use of this standard is governed by the "Texas Engineering Practice Act". No warranty of any kind is made by TxDOT for any purpose whatsoever. TxDOT assumes no responsibility for the conversion of this standard to other formats or for incorrect results or damages resulting from its use.

ELECTRICAL SERVICES NOTES

All work, materials, services, and incidentals, whether or not specifically shown on the plans, which may be necessary for a complete and proper electrical service installation as specified in the plans to obtain electrical power shall be paid for, performed, furnished and installed by the Contractor. The Contractor shall contact the Utility for metering and shall comply with all Utility requirements.

Primary line extensions, connection charges, meter charges, and other charges by the Utility company to provide power to the location shown, when required, shall be paid for under force account work. The costs associated with these charges shall be approved by the Engineer prior to engaging the Utility company to do the work. The Contractor shall consult with the appropriate Utility to determine costs and requirements, and shall coordinate the Utility's work as approved by the Engineer. The Contractor shall be reimbursed only the amount billed by the Utility. No additional amount for supervision of the Utility's work will be paid.

Materials shall be new and unused, materials and installation shall comply with the applicable provisions of the National Electrical Code (NEC) and National Electrical Manufacturers Association (NEMA) standards and shall be Underwriters Laboratories (UL) Listed. Electrical Service conduits, conductors, disconnects, contactors, circuit breaker panel sizes, and branch circuit breakers, shall be as shown in the Electrical Service Data elsewhere in the plans. Faulty fabrication or poor workmanship in any material, equipment, or installation shall be justification for rejection.

The Contractor shall submit for approval no less than six (6) copies of catalog cut sheets on electrical service materials. Submittals shall be legible and shall be marked to indicate which product on a cut-sheet is to be supplied. Where manufacturers provide warranties and guarantees as a customary trade practice, Contractor shall furnish to the State such warranties or guarantees.

The Contractor shall provide locks keyed with Master #2195 for all lockable electrical enclosures. Keys and locks become property of the State. Unless otherwise approved by the Engineer, enclosures shall not be energized until locks are provided and all bolts are installed.

Circuit directories, where provided, shall be filled out. All breakers and components in shop built panels and enclosures shall be labeled with duo-colored plastic labels. Letters shall be a minimum 3/8 " in height.

Enclosures with external disconnects that de-energize all equipment inside the enclosure, need not have dead front trim, except that incoming line terminations shall be protected from incidental contact.

When galvanized is specified for nuts, screws, bolts or miscellaneous hardware, stainless steel may be used. All wiring and components shall be rated for 75 degrees C. Minimum size for service entrance conductors shall be #6 XHHW.

I. Safety Switch. A safety switch, placed ahead of the meter, shall only be used when specified by the Utility and when shown on the Electrical Service Data. The switch shall be UL Listed, heavy duty type, 600 volt, unfused, with a UL type 3R enclosure and equipped with a solid neutral (s/n) assembly. The switch shall be padlockable in the "on" position.

II. Service Type. Electrical service types A, C, D, and T shall be as schematically detailed on ED(4) or ED(5). Other service types shall be as detailed elsewhere on the plans.

III. Branch Circuit Breakers. Circuit breakers shall be thermal magnetic and have a minimum interrupting capacity of 10,000 amps and a voltage rating compatible with their use. Circuit breakers shall be sized as shown in the electrical service data. Circuit breakers in panelboards and load centers shall be full size and designed exclusively for the panelboard or load center in use. Tandem and half-width breakers shall not be used. All circuit breakers shall be permanently and clearly marked identifying the circuit or device supplied. Circuit breakers shall be UL Listed to UL489.

IV. Circuit Breaker Panelboard. Panelboards shall be UL Listed. Panelboards shall have copper busses, a minimum of 6 one-pole spaces or as required in the electrical service data, and when required will be rated for service equipment. Enclosure shall meet or exceed UL type 3R classification. Panelboards shall have a threaded hub conduit entry for conduit entering the top of the enclosure. Circuit breakers shall be bolt-in type only.

V. Circuit Breaker Load Center. Load centers shall be UL Listed.
Load centers for type T services may have copper or aluminum busses, all other load centers will be copper bus only. Load center will have a minimum of 4 one-pole spaces, and shall be rated for service equipment. Enclosure shall meet UL type 3R classification. Load centers shall have a threaded hub conduit entry for conduit entering the top of the enclosure. Circuit breakers shall be plug-in type only. Load centers for type T services shall accomodate a maximum of 6 one-pole breakers.

VI. Separate or Auxiliary Enclosure. Separate enclosures for HOA, photocell and lighting contactors for types D & T Services shall be a UL Listed assembly with outer door. Interior shall have dead front trim. HOA switch operator shall extend through the dead front trim. Photocell shall be mounted inside the enclosure as described in paragraph XIII when required by descriptive code. Separate enclosures shall meet the construction requirements of paragraph VIII. E, except that separate enclosure shall not have external operating handle, need not have a data pocket and door may latch at only one point. All equipment may be located in one enclosure instead of two, when approved by the Engineer.

VII. Where a Type D or T service is provided, laminated "as built" drawings are required as shown on ED(5) VIII E, shall be delivered before completion of the work, to the Engineer in lieu of placement within these smaller enclosures. Conduit may not enter the back wall of a service enclosure penetrating the equipment mounting panel. Provide grounding bushings on all metal conduits, terminate bonding jumper to grounding bus. Grounding bushing is not required when the end of the metal conduit is fitted with a conduit sealing hub or threaded boss such as a meter base.

EXPLANATION OF ELECTRICAL SERVICE DESCRIPTIVE CODE

ELEC SERV TY X (XXX/XXX) XXX (XX) XX (X) XX (X)

Example: ELEC SERV TY A(240/480)100(NS)SS(E)GC(O)

Schematic Type

Service Voltage (V / V)

Disconnect Amp Rating
(000 indicates main lug only)

SS= Safety switch ahead of meter
NS= No switch ahead of meter and/or no meter required

Enclosure Type
GS= Galvanized steel (see ED(5)VIII,D)
SS= Stainless steel
AL= Aluminum

Photocell Mounting Location
T= Top of pole
E= Inside service/separate enclosure
L= Luminaire mounted
N= None

Service Support Type
GC= Granite concrete
OC= Other concrete
TP= Timber pole
SP= Steel pole
SF= Steel frame
OT= Pole by others or paid for separately
EX= Existing pole
TS= Switch gear to be placed on traffic signal pole
RT= Rectangular structural tubing
PS= Pedestal Service (see ED(5)VIII,G)

O= Overhead service
U= Underground service

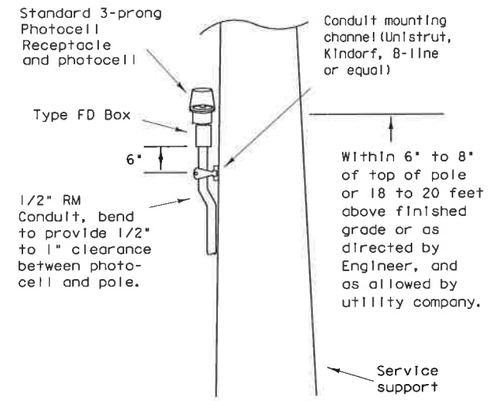

TOP MOUNTED PHOTOCELL

Conduit support spacing 3 feet from enclosure; 5 feet max.

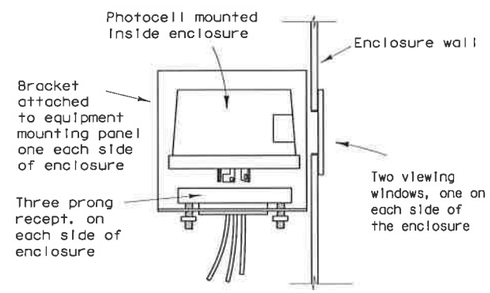

ENCLOSURE MOUNTED PHOTOCELL

For photocell specifications see ED(5),XIII.

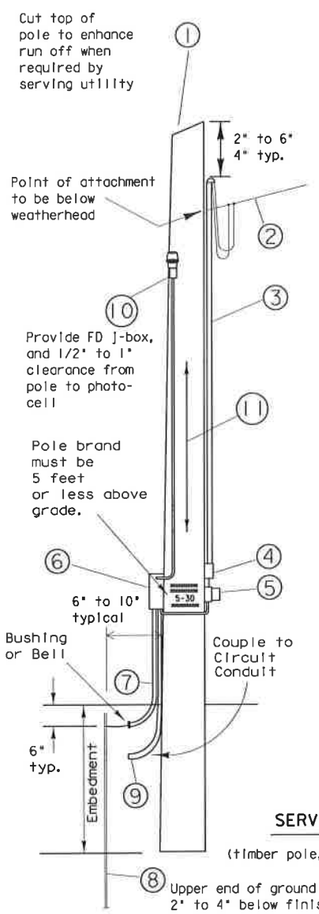

1 - Class 5 pole, height as required
2 - Service drop from utility company (attached below weatherhead)
3 - Service conduit and service entrance conductors(RMC) (See Electrical Service Data)
4 - Safety switch (when required)
5 - Meter (when required)
6 - Service enclosure
7 - No. 6 bare grounding electrode conductor in 1/2 " PVC to ground rod - extend 1/2 " PVC 6" underground.
8 - 5/8 " x 8' Copper clad ground rod - drive ground rod completely underground unless otherwise approved by the Engineer.
9 - RM conduit - same size as branch circuit conduit.
10 - Photocell and conduit - If top mounted. (See Electrical Service Data)
11 - When required by the serving utility provide bare #6 awg copper conductor. Run wire from pole top to butt wrap or copper butt plate. Protect conductor to a height of 8 ft above finish grade.

LIQUIDTIGHT FLEXIBLE METAL CONDUIT (LFMC)

(If applicable)

- Liquidtight flexible metal conduit, may be used when meter and service enclosure are mounted 90 to 180 degrees to each other. Size shall be same as service entrance conduit.
- LFMC shall not exceed 3 ft. and shall be securely supported within one ft. of each end. No strap required for LFMC shorter then 12"
- Each end of LFMC must have a grounding bushing or be terminated with a grounding fitting.
- A neutral conductor must be installed within the LFMC.
- Bend in liquidtight flexible metal conduit shall not exceed 180 degrees.
- A pull test is required on all installed conductors, at least six inches of free conductor movement shall be demonstrated to the satisfaction of the Engineer.

SERVICE SUPPORT TYPE TP (O)

(timber pole, overhead service, typical arrangement)

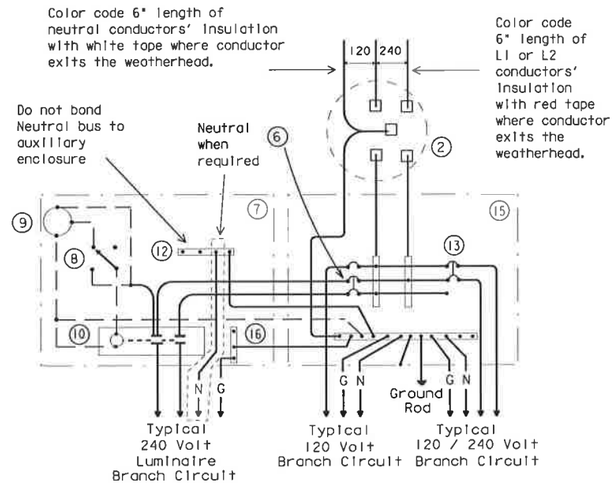

SCHEMATIC TYPE T

120/240 VOLTS - THREE WIRE

Install photocell and lighting contactor when shown on Electrical Service Data.

SCHEMATIC LEGEND

1 - omitted
2 - Meter (when required)
3 - Service Assembly Enclosure
4 - Main Disconnect Breaker (Not Used)
5 - Omit
6 - Circuit Breaker, 15 Amp typical for control circuit wiring
7 - Auxiliary Enclosure
8 - Control Station ("H-O-A" Switch)
9 - Photo Electric Control (enclosure-mounted shown)
10 - Lighting Contactor
11 - Power Distribution Terminal Blocks (Not Used)
12 - Neutral Bus required when 120 v. lights are controlled by lighting contactor
13 - Branch Circuit Breaker (See Electrical Service Data)
14 - Circuit Breaker Panelboard (Not Used)
15 - Load Center
16 - Ground Bus

Power Wiring
Control Wiring
—N— Neutral Conductor (when required-to serve 120 v. loads only)
—G— Equipment grounding conductor-always required

TIMBER POLE NOTES

1. Conduit and electrical conductors attached to the electrical service pole and underground within 12 inches of service pole shall not be paid for directly but shall be subsidiary to the service pole.
2. Pole top mounted photocell, install on north side of pole or in service enclosure as required. See Electrical Service Data.
3. Attach meter and service equipment with stainless steel or galvanized channel (Unistrut, Kindorf, or equal). Gain pole as required to provide flat surfaces for each strut. Paint ends of galvanized channel with zinc rich paint. Gain depth 5/8" max. Gain height 1 7/8" max. Strut to be 1" max. deep, and 1 5/8" wide max. Secure each strut section to timber pole with two galvanized or SS lag bolts, 1/4" diameter min. by 1 1/2" length min. Place flat cut galvanized or SS washer on each lag bolt. Gain pole in a neat and workmanlike manner.
4. Embedment depth shall be as required in item 627 Treated Timber Poles.
5. Poles trimmed for excess length shall be trimmed from the top end only.

STANDARD PLANS
TEXAS DEPARTMENT OF TRANSPORTATION
Traffic Operations Division

ELECTRICAL DETAILS- SERVICE SCHEMATICS AND SUPPORT-TYPE TP (OVERHEAD)

ED(4)-03

© TxDOT April 1998 DN: KB CK: JW DW: DN CK: GC

REVISIONS	STATE DISTRICT	FEDERAL REGION	FEDERAL AID PROJECT				SHEET
12-00	SAT	6					674
3-03	COUNTY		CONTROL	SECTION	JOB		HIGHWAY
	BEXAR		2708	01	022, ETC		FM2696

SERVICE ENCLOSURE NOTES

VIII. Service Assembly Enclosures. All service assemblies and enclosures shall be UL Listed for the intended purpose.

A. Shop built or shop assembled service assemblies (all types except Type T and Type D without lighting contactor or enclosure mounted photo cell) and all auxilliary equipment enclosures mounted with service equipment and paid for as part of item 628, "Electrical Services", shall be built or assembled by a UL Listed Industrial Control Panel shop and shall have a unique serial numbered UL Label with the words "LISTED ENCLOSED INDUSTRIAL CONTROL PANEL". The same or an additional label shall have the name, location, and phone number of the shop, the UL file number of the shop, the shop order or drawing number, date of manufacture or assembly, and the line voltage. The service assembly enclosure shall also be labeled "SUITABLE ONLY FOR USE AS SERVICE EQUIPMENT".

B. Conduit entries into the top of enclosures shall have threaded hub. Conduit entries through the equipment mounting back plate will not be allowed.

C. All service enclosure front doors shall be permanently labeled "DANGER HIGH VOLTAGE". Label shall be a self sticking type, intended for outdoor installation. Lettering style, layout and colors of red, black and white shall be as required by OSHA. Label letters shall be 1 to 1 1/2 inches high or as high as the enclosure door width will permit for smaller services. Separate or auxiliary lighting enclosures need not be OSHA labeled when mounted in the same viewing plane as the service enclosure front door. Where only one type of load is served by the service, the service door shall be marked using duo-colored plastic labels or self adhesive vinyl weather resistant labels, minimum of 1 inch high, applied in a neat and workmanlike manner. On the label will be the service number shown on the plans as well as identifying the load served specifically (i.e. lighting, landscaping, signals, traffic management or other wording as directed by the Engineer). Safety switches need not be OSHA labeled unless specifically required by the serving utility.

D. Type GS enclosures will only be allowed for service Types D and T without an enclosure mounted photocell and/or lighting contactor and the Type C panelboard. This spec will allow on "off the shelf" product meeting these specifications to be used. Type GS enclosures shall be made from pre-galvanized steel sheeting, hot dipped galvanized steel, or powder coat painted steel unless shown differently on the plans. Steel enclosures shall be painted inside and outside; galvanized enclosures may be painted. Unless otherwise approved by the Engineer, painted enclosures shall be gray, beige, white or light green. Panelboard/loadcenter enclosures shall meet UL type 3R requirements, shall have a dead front trim, and an outer padlockable door preventing unauthorized persons from operating contained equipment. Galvanized steel is no longer allowed for Types A, C, or custom-built D or T enclosures. If GS is shown in the descriptive code for any of these, an AL shall be provided.

E. Type AL enclosures for service Types A and C shall meet UL type 3R requirements and shall also meet additional requirements of this paragraph. The enclosure shall have both a main disconnect remote operator handle and a door latch handle. Die-cast handles are not acceptable. The main disconnect remote operator shall be flange-mounted, shall interlock the door when in the "on" position, and shall be padlockable in both the "on" or "off" positions. Door latch shall latch at two or more points, operate by a handle separate from disconnect switch and be capable of being locked. Door closure clamps will not be allowed. Lock must be keyed to Master #2195. All the enclosures shall have either a continuous stainless steel piano hinge with stainless steel pin or enclosures less than 30 inches may have two heavy duty hinges, those over 30 inches must have three. Heavy duty two and three point hinges shall have a 0.185 inch minimum diameter electro-zinc plated steel pin or a stainless steel pin. Two point hinged doors shall be rated for 56 lbs of loading. Three point hinged doors shall be rated for 70 lbs of loading. The door shall have an attached data pocket constructed of either thermoplastic or metal. Pocket shall be 12" x 12", unless that size will not fit in enclosure. The pocket shall then be as large as possible, as approved by the Engineer, and mechanically attached with stainless steel nuts and bolts, or stainless steel or aluminum rivets. Enclosure shall include an equipment mounting panel installed inside the enclosure on collar studs or tapped bosses, and constructed of a minimum 12 guage galvanized steel. Equipment mounting panels shall not be painted. Enclosure shall have factory installed external mounting feet. Enclosure door shall be capable of opening at least 130 degrees, with arm or other approved means to hold the door open. Only the enclosure exterior will be primed and painted. Paint color shall be beige or gray and shall be powder coat paint as shown below. Condensation drainage shall be provided in the bottom of the enclosure before leaving the factory. The Contractor shall prepare and submit a schematic drawing unique to an individual service. The approved drawing shall be laminated and placed in the document pocket of the service at the time of shipment to the job site. All applicable wiring diagrams and plan sheet layouts for all equipment and branch breaker circuits supplied by that service shall also be laminated and placed in the document pocket prior to shipping. Type AL enclosures for Type D and T services with enclosure mounted photocell and/or lighting contactor shall have the loadcenter interior mounted in an enclosure with properly adapted dead front trim. Types D and T shall not have a loadcenter exterior "can" mounted inside another enclosure meeting these specifications. (Do not put one enclosure inside another enclosure). Types D and T with enclosure mounted photocell and/or lighting contactor shall meet the additional requirements of this paragraph except that remote-operating handle will not be provided.

F. Type SS enclosures for Type A and C shall meet all the requirements above for their respective type AL. Type SS enclosures for D and T shall meet all the requirements above for their respective type AL. Stainless Steel shall not be painted.

G. PS enclosure shall be as detailed and specified on ED(8). Galvanized steel will not be allowed for any pedestal service. If GS is shown in the descriptive code an AL will be provided.

IX. Powder Coat Paint. Powder coating shall be either a polyester thermosetting resin, a zinc rich primer with a TGIC (triglycidyl isocyanurate) powder overcoating, or a zinc-rich epoxy powder, applied by either electrostatic spray or fluidized bed immersion, high temperature oven cured, high density, low gloss, 4 mil thick (minimum), coating. Adhesion shall meet the 5A or 5B classifications of ASTM D3359. Finish shall be uniform in appearance and free of scratches.

X. Main Disconnect. Main disconnect device shall be a circuit breaker, as specified in the Electrical Service Data, shall be two or three pole, and rated for the voltage and amperage specified. Circuit breaker shall be an UL Listed thermal-magnetic circuit breaker controlled by flange-mounted remote operator in the service assembly enclosure when required. Circuit breakers shall have a minimum interrupting rating of 10,000 Amps. When the utility company provides a transformer larger than 50 KVA, Contractor shall verify that the available fault current is less than the circuit breaker amps interrupting capacity (AIC) rating and shall provide documentation from the Utility to the Engineer. Documentation shall be submitted at the same time as other electrical submittals. Circuit breaker shall be UL Listed to UL489. No backfed breakers will be allowed for use as a main disconnect.

XI. Control Circuit. Control circuit protection shall be 15 amp circuit breaker.

XII. Control Station ("H-O-A" Switch). Control station shall be a maintained-contact, three position selector switch in an UL type enclosure. Switch shall be rated 600 volts and shall be fitted with "Hand-Off-Auto" legend.

XIII. Photo Electric Control. Photo electric control shall consist of a photocell, internal lightning arrester, and relay or bimetallic switch mounted inside a weatherproof enclosure with standard 3-prong twist lock photocell plug and receptacle. The enclosure shall be made of poly-acrylic with clear acrylic window. Enclosure chassis shall be molded thermosetting plastic. The photocell shall have a polyethylene gasket, and shall have a hermetically sealed cadmium sulfide cell. The arrester shall have an enclosed type expulsion arrester rated 2.0 kV sparkover with 5,000 amps follow-through. Relay or switch shall be time delay type with normally closed contacts. Photo electric control shall be rated a minimum of 1800 VA, voltage as required. Enclosure mounted photocells shall be the same as above except that the photocell shall be mounted inside the enclosure. The enclosure shall have two acrylic paned windows, or other material approved by the Engineer, one on each side of the enclosure. Each window shall be rectangular approximately one inch by two inches, round 2 inch diameter, or as otherwise approved by the Engineer. Bracket and photocell's receptacle will be mounted inside enclosure next to each window. Except for window side, 2" of clearance is required on all sides of photocell for ease of replacement. The photocell's receptacle is held in place by two mounting screws on bracket and located next to each window of the enclosure. The 3-prong twist lock photocell shall be mounted in a position to receive light from the window closest to the photocell. The photocell shall be mounted in a position to receive light from one window. Top of pole mounted photocells shall be mounted as shown on ED(4). The Contractor shall be responsible for proper operation of the photo-electric control. The Contractor shall move and/or adjust or shield the photocell from stray or ambient nighttime light or shall make any other adjustments required for proper operation. The photocell shall face North when practicable. Unless otherwise shown on the plans, the photocell shall turn on the illumination system at 1.0 +(-) 0.5 footcandle and turn off the illumination system at two footcandles higher than turn on.

XIV. Lighting Contactor. Lighting contactor shall be a UL Listed NEMA rated lighting contactor, two-pole or multipole as required, electrically held type designed to control high pressure sodium lighting loads, with silver alloy double break contacts rated at 240 volts, 480 volts or 600 volts as required. Lighting contactor shall not be the DIN rail mounted type.

XV. Power Distribution Terminal Blocks. Power distribution terminal blocks shall be rated for 600 volts and shall be used for line side connections to branch circuit breakers where more than one circuit breaker is required. Lugs on blocks shall be properly sized for conductors being used. Only one conductor shall be placed under each lug.

XVI. Neutral/Ground Bus. Neutral/ground bus shall be a factory made bus permanently bonded to the enclosure with properly sized lugs for grounding and neutral conductors.

SCHEMATIC LEGEND

1 - Safety Switch (when required)
2 - Meter (when required)
3 - Service Assembly Enclosure
4 - Main Disconnect Breaker (See Electrical Service Data)
5 - Omit
6 - Circuit Breaker, 15Amp
7 - Auxiliary Enclosure
8 - Control Station ("H-O-A" Switch)
9 - Photo Electric Control (enclosure-mounted shown)
10 - Lighting Contactor
11 - Power Distribution Terminal Blocks
12 - Neutral/Ground Bus
13 - Branch Circuit Breaker (See Electrical Service Data)
14 - Circuit Breaker Panelboard (See Electrical Service Data) (If Type C is shown as AL or SS on descriptive code, this is the service assembly enclosure only. Panelboard enclosure is GS unless otherwise noted.
15 - Load Center

——— Power Wiring
– – – – Control Wiring
—N— Neutral Conductor (when required) serve 120 v. loads only)
—G— Equipment grounding conductor-always required

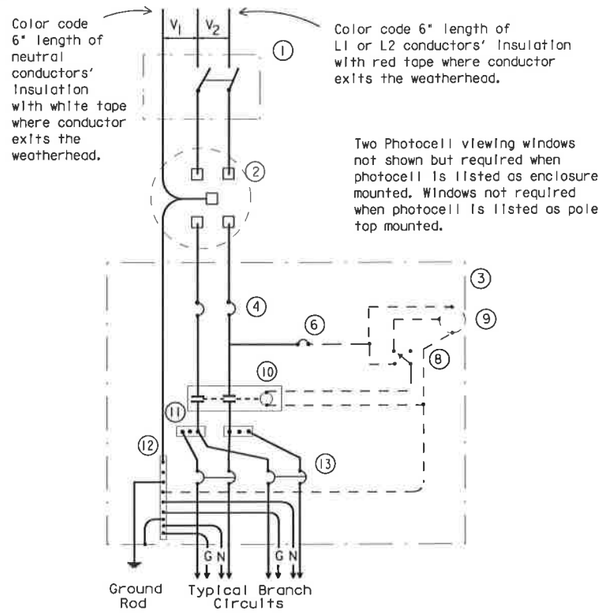

SCHEMATIC TYPE A

THREE WIRE

[Maximum feeder circuit size (High Mast Poles): 100 amps for two pole 480V, 125 amps for one or two pole 120V or 240V. Maximum branch circuit size: 50 amps.]

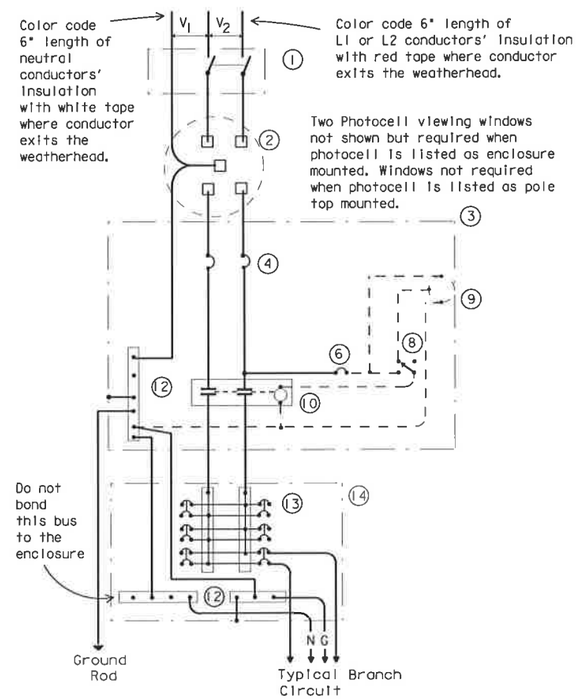

SCHEMATIC TYPE C

THREE WIRE

[Maximum feeder circuit size (High Mast Poles): 100 amps for two pole 480V, 125 amps for one or two pole 120V or 240V. Maximum branch circuit size: 50 amps.]

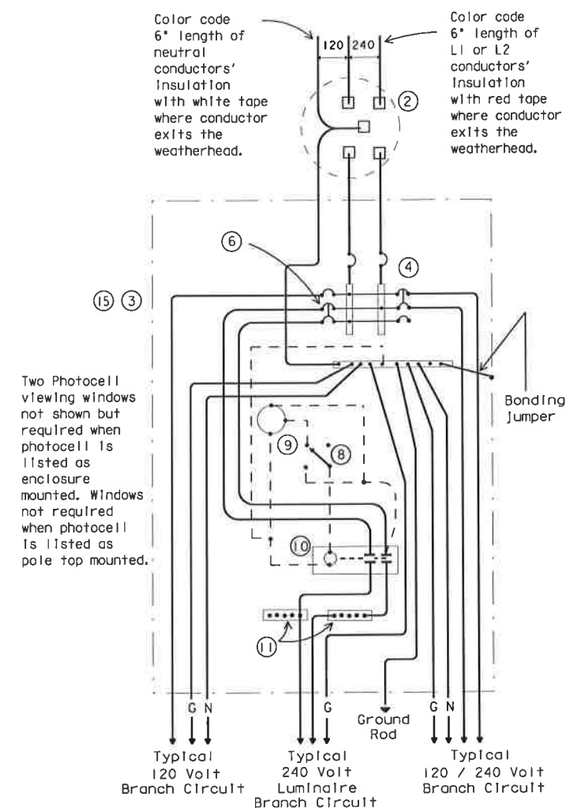

SCHEMATIC TYPE D

120/240 VOLTS - THREE WIRE

[Install photocell and lighting contactor when shown on Electrical Service Data. See Type D service notes.]

TYPE D SERVICE NOTES

Photocell and lighting contactor shall be located either in the same UL type 3R enclosure with load center or, if approved by Engineer, in separate enclosure. There shall be a window on each side of enclosure to allow operation of photocell. Both photocell contactor and breaker area shall have dead front trim. Enclosure, except for RT and PS supports, shall not exceed 36 inches in height or 16 inches in width unless approved by the Engineer. Ty D load center with lighting controls or TY D separate lighting control enclosure shall have power distribution blocks for a minimum of 4, #8 conductors per phase.

STANDARD PLANS
TEXAS DEPARTMENT OF TRANSPORTATION
Traffic Operations Division

ELECTRICAL DETAILS- SERVICE ENCLOSURE & NOTES

ED(5)-03

©TxDOT April 1998	DN: KB	CK: JW	DW: DN	CK: GC		
REVISIONS 12-00 3-03	STATE DISTRICT SAT	FEDERAL REGION 6	FEDERAL AID PROJECT			SHEET 675
COUNTY BEXAR			CONTROL 2708	SECTION 01	JOB 022, ETC	HIGHWAY FM2696

DISCLAIMER
The use of this standard is governed by the "Texas Engineering Practice Act". No warranty of any kind is made by TxDOT for any purpose whatsoever. TxDOT assumes no responsibility for the conversion of this standard to other formats or for incorrect results or damages resulting from its use.

DN: CK: DW: CK:
DATE: ACC: FILE:
LEVELS D

DISCLAIMER
The use of this standard is governed by the "Texas Engineering Practice Act". No warranty of any kind is made by TxDOT for any purpose whatsoever. TxDOT assumes no responsibility for the conversion of this standard to other formats or for incorrect results or damages resulting from its use.

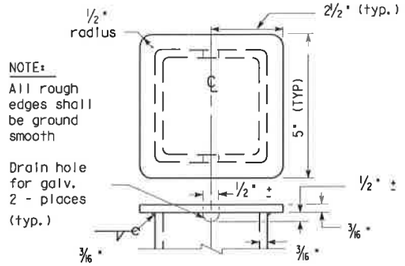

NOTE:
All rough edges shall be ground smooth

Drain hole for galv. 2 - places (typ.)

TOP OF POLE
TYPE SF & SP

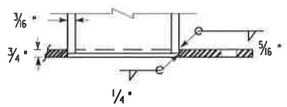

BOTTOM OF POLE
TYPE SF & SP

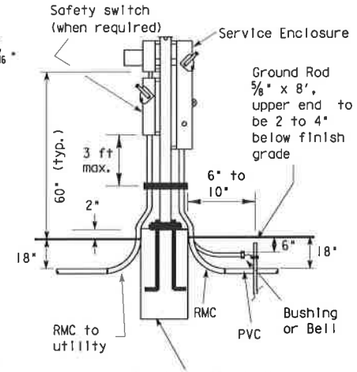

SERVICE SUPPORT
TYPE SP (U)
UNDERGROUND SERVICE
WITH SAFETY SWITCH

Color code 6" of grounded neutral conductors insulation with white tape where conductor exits the weatherhead. Color code 6" of L1 or L-2 Hot-ungrounded conductors insulation with red tape where conductor exits the weatherhead. Conductor free length, 12" min., 18" max.

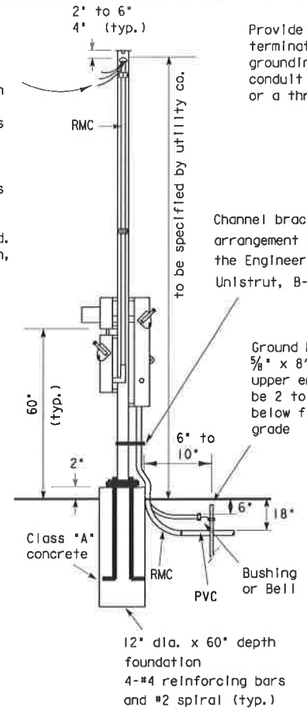

SERVICE SUPPORT
TYPE SP (O)
OVERHEAD SERVICE
WITH SAFETY SWITCH

Provide grounding bushings on all metal conduits, terminate bonding jumpers(min. #6 AWG. Copper) to grounding bus. Grounding bushing not required when conduit end is fitted with a conduit sealing hub or a threaded type of boss such as a meter hub.

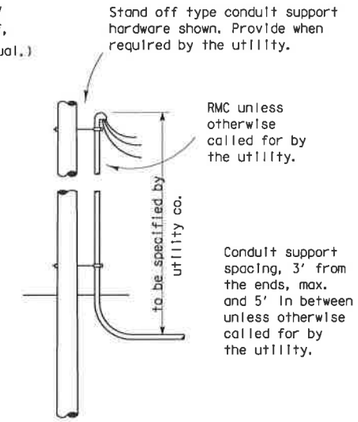

UNDERGROUND RISER
AT UTILITY POLE
(for underground service)

NOTES:

1. Support Type SP and SF: Fabricated from 4" x 4" x 3/16 " square structural tubing, ASTM A500 Grade A or G or equal. Base plate shall be 3/4 " plate, ASTM A36 or equal. All equipment and conduit shall be mounted on galvanized channel strut, 1 1/2 " x 1 5/8 " x 12 guage galvanized steel channel (Unistrut, Kindorf, B-line or equal) clamped with channel hardware, bolted or welded to vertical member as approved by the Engineer.
2. Paint field cut ends of all channels with zinc-rich paint.
3. All Steel Poles (SP and SF) shall be hot-dip galvanized after fabrication. Poles for overhead service shall be fitted with eyebolt or similar fitting, as approved by the utility company, for attachment of sevice drop to the pole.
4. All conduit and conductors attached to the electrical service and within 12 inches of the electrical service will not be paid for directly, but shall be subsidiary to the electrical service. All conduit and conductors from the utility company pole to the point 12 inches from the electrical service, including conduit and conductors required for the utility pole riser when furnished by the Contractor, will be paid for separately.
5. All mounting hardware and installation details of services shall be in accordance with utility company specifications.
6. Anchor bolts for underground service supports shall be 3/4" x 18" x 4" (dia. x length x hook length). Anchor bolts for overhead services shall be 3/4" x 56" x 4". Anchor bolts shall be provided with leveling nuts.
7. Conduit for grounding electrode conductor (ground rod wire) shall be 1/2" PVC. All other conduit on electrical services shall be rigid metal conduit. Service entrance conduit size shall be as shown elsewhere. Conduit for branch circuit entry to enclosure shall be the same size as that shown on the layout sheets for branch circuit conduit. Rigid metal conduit shall extend to the rigid metal elbow and then be coupled to the type conduit shown on the layout for that particular branch circuit. RMC shall have grounding bushings in enclosures.
8. If pole is painted, each separate painted piece shall have a bonding jumper attached to a tapped hole.
9. Sheet metal screws are not allowed for bonding. Provide 1/4-20 machine screws. Remove all non-conductive material at contact points. Terminate bonding jumper using listed device. Bonding jumper min. #6 AWG Copper. Make up all threaded bonding connections wrench tight.
10. Conduits entering enclosure from underground shall be sealed at both ends. Silicone sealant will not be allowed.
11. Ground rod clamp to be UL listed for direct burial.
12. Service entrance conductors shall exit separately bushed non-metallic openings in weatherhead.
13. Free conductor at weatherhead to be 12 in. min., 18 in. max., or as required by utility. Color code grounded-neutral conductor with white tape covering 6 in. of conductor. Color code L1 or L2 Hot un-grounded conductor with red tape covering 6 in. of conductor. Service drop and service entrance conductors must not contact metal pole in such a manner as to result in abrasion of insulated conductors.
14. Conduit support spacing to be max. 3 ft. from ends, and max. 5 ft. in between.
15. Shop drawings are not required for service support structure unless specifically stated elsewhere or as directed by the Engineer.
16. Service enclosure to be labeled as specified on ED(5) VIII C.
17. Liquidtight flexible metal conduit (LFMC) may be used between the meter and service enclosure when they are mounted 90 to 180 degrees to each other. LFMC shall be the same size as service entrance conduit. LFMC shall not exceed 3 ft. and shall be securely supported within one foot of each end. LFMC shorter then 12" need not be strapped. Each end of LFMC must have a grounding bushing or be terminated with a grounding fitting. A neutral conductor must be installed within the LFMC. Bend in LFMC shall not exceed 180 degrees.
A pull test is required on all installed conductors, at least six inches of free conductor movement shall be demonstrated to the satisfaction of the Engineer.

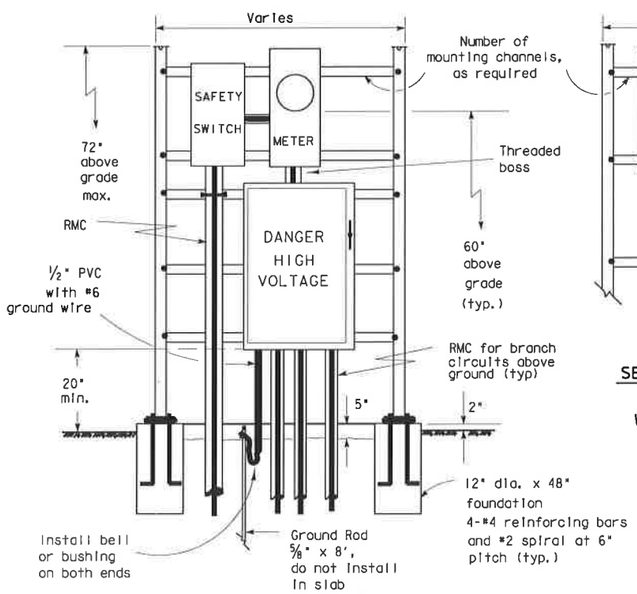

SERVICE SUPPORT TYPE SF (U)
UNDERGROUND SERVICE
WITH SAFETY SWITCH
(Typical Arrangement)

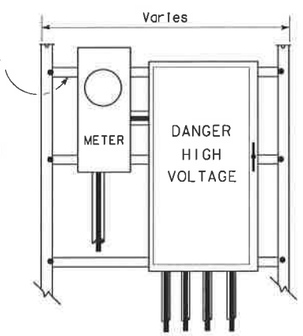

SERVICE SUPPORT TYPE SF (U)
UNDERGROUND SERVICE
WITHOUT SAFETY SWITCH

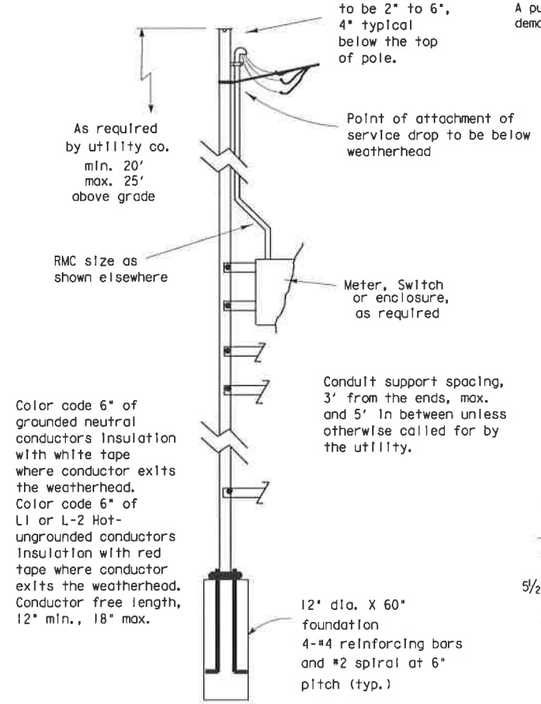

SERVICE SUPPORT TYPE SF (O)
OVERHEAD SERVICE

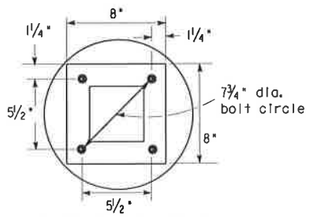

BASE PLATE DETAIL
TYPE SF & SP

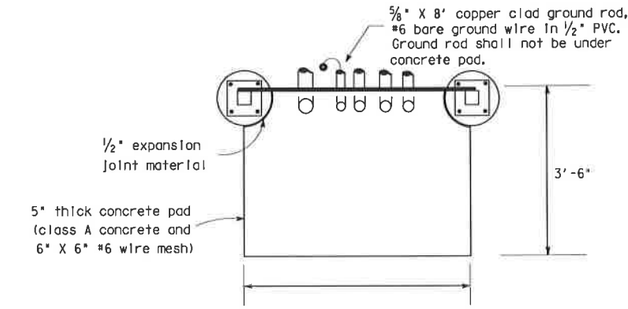

SERVICE SUPPORT TY SF (O) & SF (U)
TOP VIEW

5/03 Revision

⚠ Revised notes.

STANDARD PLANS
TEXAS DEPARTMENT OF TRANSPORTATION
Traffic Operations Division

ELECTRICAL DETAILS-SERVICE SUPPORT TYPES SF & SP

ED(6)-03

© TxDOT January 1992	DN: KB	CK: JW	DW: DN	CK: GC		
REVISIONS 4-98 12-00 3-03 5-03	STATE DISTRICT: SAT	FEDERAL REGION: 6	FEDERAL AID PROJECT			SHEET 6726
	COUNTY: BEXAR		CONTROL: 2708	SECTION: 01	JOB: 022, ETC	HIGHWAY: FM2696

DN: LR
CK: CW
DW: DN
CK: MT

DATE:
ACC: d58hplc/usr/d580504
FILE:

NOTES:

1. Luminaire conductors shall not be looped through controller cabinet.
2. Electrical system to include an equipment grounding conductor noted here as 'G'. All exposed metal parts are to be bonded to grounding conductor.
3. Photocell, when required, shall be mounted at top of pole or in enclosure as shown on ED(4) and ED(5) and as required by descriptive code.
4. Roadway lighting fixtures, when required, shall be in accordance with the material and construction methods of the item, "Roadway Illumination Assemblies" except for the test period for proper operation of the luminaires. Installed roadway lighting luminaires and internally lighted street name signs shall be tested for proper operation as a part of the associated traffic signal system.
5. Internally lighted street name signs (ILSN), when required, shall be in accordance with the item "Internally Lighted Street Name Signs". Because of the electrical isolation of ILSN hinges, a #12 green grounding conductor shall be run to the ILSN fixture.
6. Install ground rod at alternate location when directed by the Engineer. Maintain a minimum of 8 ft in contact with the earth.
7. Liquidtight flexible metal conduit (LFMC), may be used when meter and service enclosure are mounted 90 to 180 degrees to each other. LFMC shall be same size as service entrance conduit. LFMC shall not exceed 3 ft. and shall be securely supported within one foot of each end. No strap required for a LFMC shorter than 12". Each end of LFMC must have a grounding bushing or be terminated with a grounding fitting. A neutral conductor must be installed within the LFMC. Bend in liquidtight flexible metal conduit shall not exceed 180 degrees.
8. Minimum embedment depth as per Item 627 Treated Timber Poles.
9. Pole to be set plumb.
10. Back fill thoroughly tamped in 6 in. lifts. Place 6 inches additional backfill above grade around pole base to allow for settling, as per Item 627.
11. Excess pole length shall be trimmed from the top at a slope to aid water run off.
12. Gain pole two places for each meter, service, separate or auxiliary enclosure. See ED(4) for details.
13. All illumination and power conductors to be pull tested and megged. Do not meg traffic signal cable.
14. Enclosures are to be locked, and ground box covers are to be bolted before power is applied to the circuit.
15. Conduits entering top of enclosures to be fitted with conduit sealing hub or threaded boss, such as meter hub. Off-set nipple, when required, shall not be zinc-die-pressure cast. All metal conduits not connected to conduit sealing hub, or threaded boss must have a grounding bushing. Terminate bonding jumper to ground bus. All conduits entering enclosures shall be sealed. Silicone shall not be allowed.

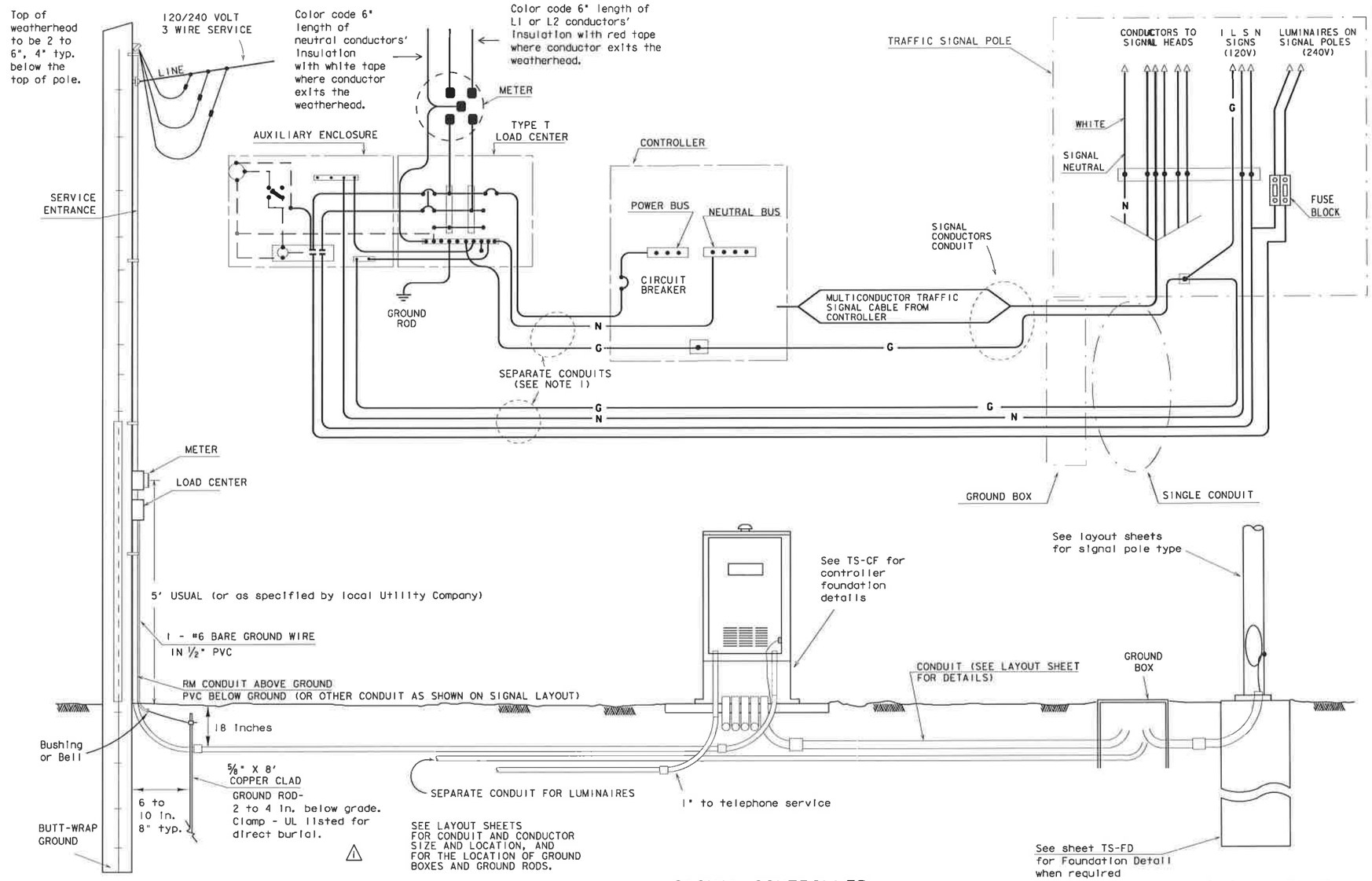

ELECTRICAL SERVICE

(TYPE T TIMBER POLE SHOWN AS EXAMPLE. SEE ELECTRICAL DETAILS, LAYOUT SHEETS, AND ELECTRICAL SERVICE DATA SHEET FOR SERVICE REQUIRED AND FOR DETAILS.)

SIGNAL CONTROLLER

SIGNAL POLE

Unless shown elsewhere in the plans, electrical service data for Types D and T shall be as follows.

ELECTRICAL SERVICE DATA

ELECTRICAL SERVICE DESCRIPTION (SEE ED(4))	SERVICE CONDUIT SIZE (RMC)	SERVICE CONDUCTORS NO./SIZE	SAFETY SWITCH AMPS	MAIN DISCONNECT CKT. BRK. POLE/AMP	TWO-POLE CONTACTOR AMPS ***	PANELBD./ LOADCENTER AMP RATING (MIN)	CIRCUIT NO.	BRANCH CKT. BRK. POLE/AMPS	KVA LOAD
TY D (120/240)070(NS)AL(E)**(*)	1 1/4 △1	3/#4	N/A	2P/70	30	100	T.S. Lighting	1P/50 2P/15	<7.1
TY T (120/240)000(NS)GS(E)**(*)	1 1/4 △1	3/#4	N/A	None	30	70	T.S. Lighting	1P/50 2P/15	<7.1

*** Eliminate photocell, contactor and seperate enclosure if lighting, or internally lighted signs are not required by plans
** See descriptive code in estimate for service support type.
* See descriptive code in estimate for overhead or underground service.

5/03 Revision

△1 Revised notes.

STANDARD PLANS
TEXAS DEPARTMENT OF TRANSPORTATION
Traffic Operations Division

ELECTRICAL DETAILS- TYPICAL TRAFFIC SIGNAL SYSTEM DETAILS

ED(7)-03

©TxDOT January 1992 DN: KB CK: JW DW: DN CK: GC REG NO.

REVISIONS	STATE DISTRICT	FEDERAL REGION	FEDERAL AID PROJECT				SHEET
4-98 12-00 3-03 5-03	SAT	6					677
	COUNTY		CONTROL	SECTION	JOB	HIGHWAY	
	BEXAR		2708	01	022, ETC	FM2696	

DISCLAIMER
The use of this standard is governed by the "Texas Engineering Practice Act". No warranty of any kind is made by TxDOT for any purpose whatsoever. TxDOT assumes no responsibility for the conversion of this standard to other formats or for incorrect results or damages resulting from its use.

DN: LR CK: CW DW: DN CK: MT

DATE: ACC: d58plc/usr/d580504 FILE:

LEVELS D

DISCLAIMER
The use of this standard is governed by the "Texas Engineering Practice Act". No warranty of any kind is made by TxDOT for any purpose whatsoever. TxDOT assumes no responsibility for the conversion of this standard to other formats or for incorrect results or damages resulting from its use.

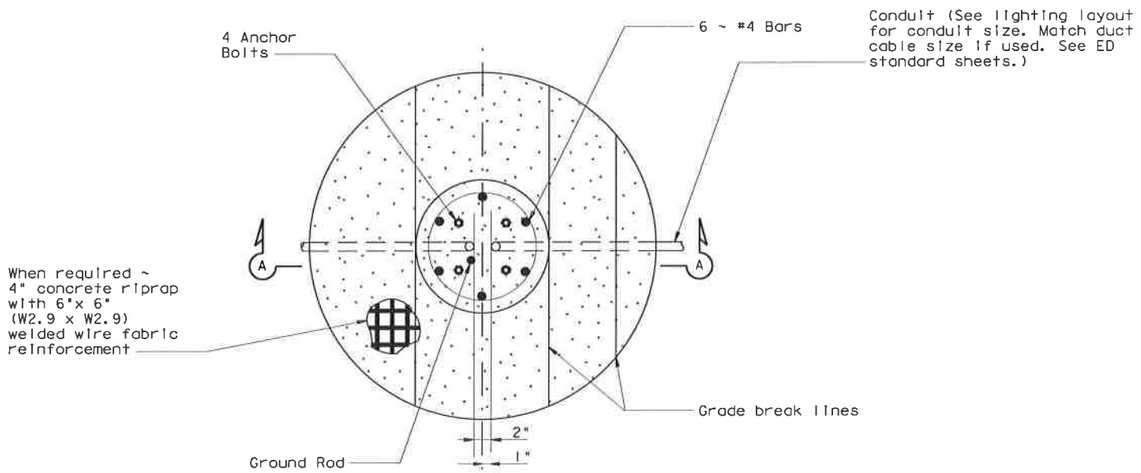

FOUNDATION DETAIL

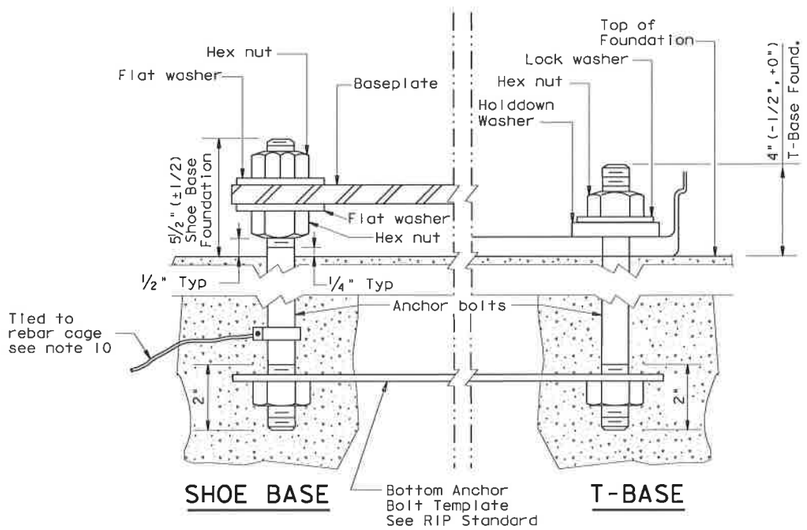

ANCHOR BOLT DETAIL

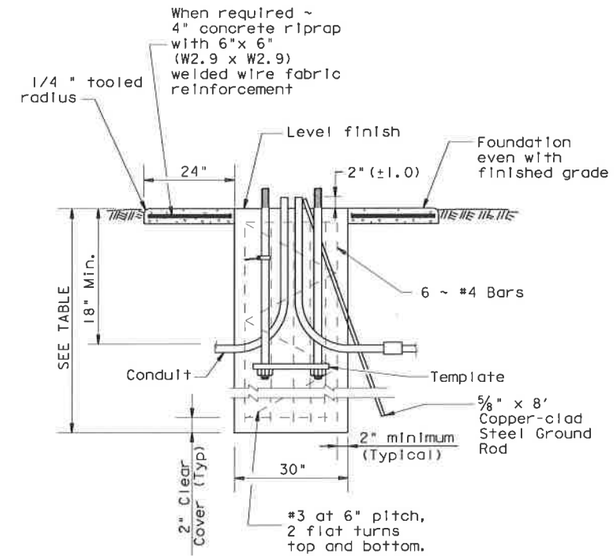

SECTION A-A

SHOWING CONSTANT GRADE

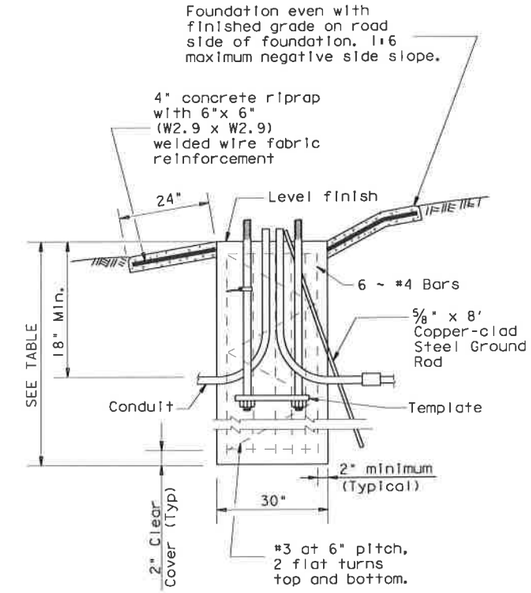

SECTION A-A

SHOWING SLOPED GRADE

PAY QUANTITY OF RIPRAP PER FOUNDATION (Install only when shown on the plans)		
Foundation Diameter	RIPRAP DIAMETER	RIPRAP (CONC) (CL B)
30 in.	78 in.	0.35 CY

ANCHOR BOLTS			
POLE MOUNTING HEIGHT	BOLT CIRCLE		ANCHOR BOLT SIZE
	Shoe Base	T-Base	
<40 ft.	13 in.	14 in.	1 in. x 30 in.
40-50 ft.	15 in.	17 ¼ in.	1 ¼ in. x 30 in.

RECOMMENDED FOUNDATION LENGTHS (See note 1)			
MOUNTING HEIGHT	TEXAS CONE PENETROMETER N Blows/ft		
	10	15	40
≤20 ft.	6'	6'	6'
>20 ft. to 30 ft.	8'	6'	6'
>30 ft. to 40 ft.	8'	8'	6'
>40 ft. to 50 ft.	10'	8'	6'

BREAKAWAY POLE PLACEMENT (See note 6)	
Roadway Functional Classification	** Pole offset (distance to transformer base, tolerance + 6in.-0in.)
Freeway Mainlanes (roadway with full control of access)	15 ft. (minimum and typical) from lane edge
All curbed, 45 mph or less design speed	2.5 ft. minimum (15 ft. desirable) from curb face
All others	10 ft. minimum*(15 ft. desirable) from lane edge

* or as close to ROW line as is practical

** provide 2/5 of the luminaire mounting height behind the pole for "falling area" to prevent encroachment on the other travel lanes. See design guidelines.

1. "Recommended Foundation Lengths" table is for information purposes only. Foundation lengths shall be as shown on the plans, or as directed by the Engineer. Foundations will be paid for under Item 416, "Drilled Shaft Foundations," unless otherwise shown on the plans.
2. Erect roadway illumination assembly poles plumb and true. Form and level the top 6" of the foundation so the pole will be plumb. Use leveling nuts to plumb shoe base poles. Do not use shims or leveling nuts under transformer bases. Do not grout between baseplate and the foundation.
3. Ensure Class 2A and 2B fit for anchor bolts and nuts. Tap and chase nuts after galvanizing. Anchor bolt body with rolled threads need not be full size.
4. Use appropriate class of concrete as specified in Items 416 and 432.
5. Place riprap around the foundation when called for elsewhere in the plans. Riprap will be paid for under Item 432.
6. Locate breakaway roadway illumination assemblies as shown in the placement table, unless otherwise dimensioned on the plans. Protect non-breakaway illumination assemblies from vehicular impact (i.e. 2 ft. behind guard rail or mounted on traffic barrier), or located outside the clear zone, except that 2.5 ft. from curb face is minimum desired for light poles on city streets, 45 mph or less, see design guidelines for further information.
7. Use 8 hold down washers on transformer base poles as recommended by the manufacturer and supplied with base.
8. Install a minimum of 2 conduits in each foundation. See lighting layout sheets for locations of foundations with more than 2 conduits. Cap unused conduits in foundations on both ends.
9. Conduit location in foundations is critical for breakaway devices. Place conduits 2 in. apart on centerline as shown.
10. Bond anchor bolt to rebar cage with #6 bare stranded copper conductor. Use listed mechanical connectors rated for embedment in concrete.
11. Use rip rap on T-base foundations that are located on a sloped grades.

ACC: 04 JAN 2007

DISPLAYED: 1 2 62

Texas Department of Transportation
Traffic Operations Division

ROADWAY ILLUMINATION DETAILS

(RDWY ILLUM FOUNDATIONS)

RID(FND)-07

FILE: rid-07.dgn	DN: TxDOT	CK: TxDOT	DW: TxDOT	CK: TxDOT
© TxDOT January 2007	DIST	FEDERAL AID PROJECT		SHEET
REVISIONS	SAT			678
	COUNTY	CONTROL	SECT	JOB	HIGHWAY
	BEXAR	2708	01	022	FM2696

Arm Length	ROUND POLES					POLYGONAL POLES					Foundation Type
	D_B	D_{19}	D_{24}	D_{30}	(1) thk	D_B	D_{19}	D_{24}	D_{30}	(1) thk	
ft.	In.	In.	In.	In.	In.	In.	In.	In.	In.	In.	
20	10.5	7.8	7.1	6.3	.179	11.5	8.5	7.7	6.8	.179	30-A
24	11.0	8.3	7.6	6.8	.179	12.0	9.0	8.2	7.3	.179	30-A
28	11.5	8.8	8.1	7.3	.179	12.5	9.5	8.7	7.8	.179	30-A
32	12.5	9.8	9.1	8.3	.179	12.0	9.0	8.2	7.3	.239	30-A
36	12.0	9.3	8.6	7.8	.239	12.5	9.5	8.7	7.8	.239	36-A
40	12.0	9.3	8.6	7.8	.239	13.5	10.5	9.7	8.8	.239	36-A
44	12.5	9.8	9.1	8.3	.239	14.0	11.0	10.2	9.3	.239	36-A
48	13.0	10.3	9.6	8.8	.239	15.0	12.0	11.2	10.3	.239	36-A

Arm Length	ROUND ARMS					POLYGONAL ARMS				
	L_1	D_1	D_2	(1) thk	Rise	L_1	D_1	(2) D_2	(1) thk	Rise
ft.	ft.	In.	In.	In.		ft.	In.	In.	In.	
20	19.1	6.5	3.8	.179	1'-9"	19.1	7.0	3.5	.179	1'-8"
24	23.1	7.5	4.3	.179	1'-10"	23.1	7.5	3.5	.179	1'-9"
28	27.1	8.0	4.2	.179	1'-11"	27.1	8.0	3.5	.179	1'-10"
32	31.0	9.0	4.7	.179	2'-1"	31.0	9.0	3.5	.179	2'-0"
36	35.0	9.5	4.6	.179	2'-4"	35.0	10.0	3.5	.179	2'-1"
40	39.0	9.5	4.1	.239	2'-8"	39.0	9.5	3.5	.239	2'-3"
44	43.0	10.0	4.1	.239	2'-11"	43.0	10.0	3.5	.239	2'-6"
48	47.0	10.5	4.1	.239	3'-4"	47.0	11.0	3.5	.239	2'-9"

D_B = Pole Base O.D.
D_{19} = Pole Top O.D. with no Luminaire and no ILSN
D_{24} = Pole Top O.D. with ILSN w/out Luminaire
D_{30} = Pole Top O.D. with Luminaire
D_1 = Arm Base O.D.
D_2 = Arm End O.D.
L_1 = Shaft Length
L = Nominal Arm Length

(1) Thickness shown are minimums, thicker materials may be used.

(2) D_2 may be increased by up to 1" for polygonal arms.

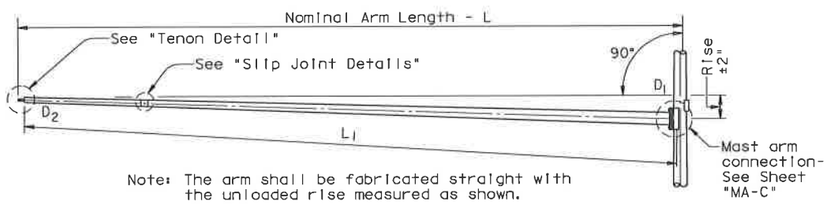

Note: The arm shall be fabricated straight with the unloaded rise measured as shown.

TRAFFIC SIGNAL ARM

(Fixed Mount)

SHIPPING PARTS LIST ★

Ship each pole with the following attached: enlarged hand hole, pole cap, fixed-arm connection bolts and washers and any additional hardware listed in the table.

Nominal Arm Length	30' Poles With Luminaire		24' Poles With ILSN		19' Poles With No Luminaire and No ILSN	
	Above hardware plus: One (or two if ILSN attached) small hand hole, clamp-on simplex		Above hardware plus one small hand hole		See note above	
ft	Designation	Quantity	Designation	Quantity	Designation	Quantity
20	20L-80		20S-80		20-80	
24	24L-80		24S-80		24-80	
28	28L-80		28S-80		28-80	
32	32L-80		32S-80		32-80	1
36	36L-80		36S-80		36-80	1
40	40L-80		40S-80		40-80	1
44	44L-80		44S-80		44-80	1
48	48L-80		48S-80		48-80	

Traffic Signal Arms (1 per Pole) — Ship each arm with the listed equipment attached

Nominal Arm Length	Type I Arm (1 Signal)		Type II Arm (2 Signals)		Type III Arm (3 Signals)	
	1 CGB connector		1 Bracket Assembly and 2 CGB Connectors (4)		2 Bracket Assemblies and 3 CGB Connectors (4)	
ft	Designation	Quantity	Designation	Quantity	Designation	Quantity
20	20I-80					
24	24I-80		24II-80			
28	28I-80		28II-80			
32			32II-80		32III-80	1
36			36II-80		36III-80	1
40					40III-80	1
44					44III-80	1
48					48III-80	

Luminaire Arms (1 per 30' pole)

Nominal Arm Length	Quantity
8' Arm	

(4) Supply Option "A" unless otherwise noted

ILSN Arm (Max. 2 per pole) Ship with clamps, bolts and washers

Nominal Arm Length	Quantity
7' Arm	
9' Arm	

Anchor Bolt Assemblies (1 per pole)

Anchor Bolt Diameter	Anchor Bolt Length	Quantity
1 1/2"	3'-4"	1
1 3/4"	3'-10"	3

Each anchor bolt assembly consists of the following: Top and Bottom templates, 4 anchor bolts, 8 nuts, 8 flat washers, 4 lock washers and 4 nut anchor devices (Type 2) per Standard Drawing "TS-FD".

Templates may be removed for shipment.

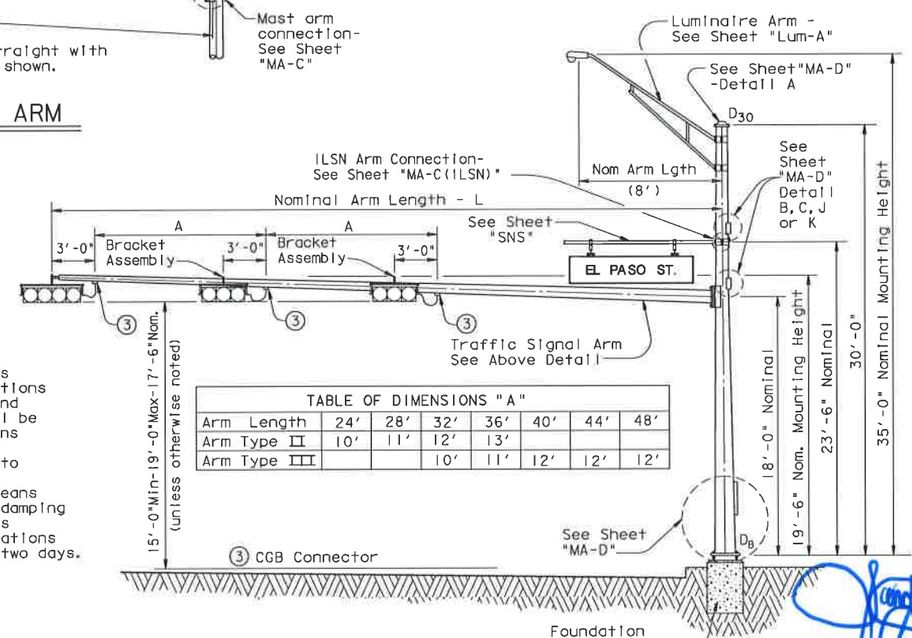

STRUCTURE ASSEMBLY

VIBRATION WARNING

Mast Arms of approximately 40' or longer are subject to possible harmonic vertical vibrations in light wind conditions due to unusual combinations of signal numbers, weights or positions, arm-wind orientation, and arm-pole stiffness. Arms shall be visually inspected in 5 to 20 mph wind conditions after signal head installation and, if vertical movements with a total excursion (max positive to max negative) of more than approximately 8" are observed at arm tip, damping devices or other means shall be fitted to the arm(s). The necessary damping device(s) or other remedial measures shall be as recommended by the fabricator. Excessive vibrations shall not be allowed to continue for more than two days.

TABLE OF DIMENSIONS "A"

Arm Length	24'	28'	32'	36'	40'	44'	48'
Arm Type II	10'	11'	12'	13'			
Arm Type III			10'	11'	12'	12'	12'

STATE OF TEXAS — JOSE A. SANCHEZ 87890 — LICENSED PROFESSIONAL ENGINEER

JOSE A. SANCHEZ — 2007.12.07 — DATE

THIS SEAL SUBSTANTIATES THE ITEMS IDENTIFIED WITH AN ★ ONLY AND DOES NOT CONFIRM THE DESIGN STANDARDS (BY OTHERS) PRESENTED HEREON

11/99 Revision

⚠ Changed to facilitate new terminal strip enclosure

SHEET 1 OF 2

Texas Department of Transportation
Traffic Operations Division

TRAFFIC SIGNAL SUPPORT STRUCTURES

SINGLE MAST ARM ASSEMBLY

(80 MPH WIND ZONE)

SMA-80(1)-99 (MOD)

FILE: SMA-80.DGN	DN: MS	CK: JSY	DW: MMF	CK: JSY
© TxDOT August 1995	DIST	FED REG	FEDERAL AID PROJECT	SHEET
REVISIONS 5-96 11-99	SAT	6		679
	COUNTY		CONTROL	SECT	JOB	HIGHWAY
	BEXAR		2708	01	022	FM2696

DISCLAIMER:
The use of this standard is governed by the "Texas Engineering Practice Act". No warranty of any kind is made by TxDOT for any purpose whatsoever. TxDOT assumes no responsibility for the conversion of this standard to other formats or for incorrect results or damages resulting from its use.

LEVELS DISPLAYED 1 2 3 4 5 6 7 8 9 10 11 12 13 14 15 16 17 18 19 20 21 22 23 24 25 26 27 28 29 30 31 32 33 34 35 36 37 38 39 40 41 42 43 44 45 46 47 48 49 50 51 52 53 54 55 56 57 58 59 60 61 62 63

ACC: d48hpla:/usr/d482517

LV=1,2 for English 1,3 for Metric

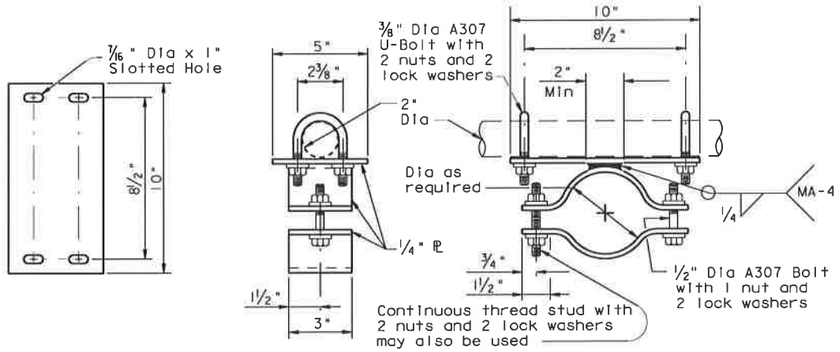

BRACKET ASSEMBLY DETAILS OPTION A

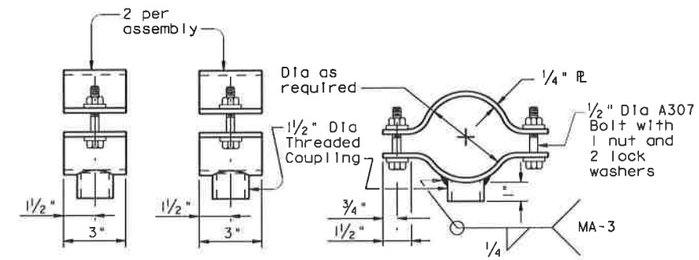

BRACKET ASSEMBLY DETAILS OPTION B

Stainless steel bands and cast bracket as in "Astro-Brac" with 1 1/2" Dia Threaded Coupling.

BRACKET ASSEMBLY OPTION C

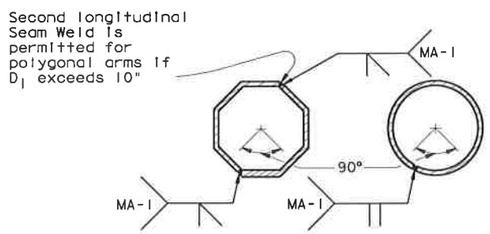

ARM WELD DETAIL

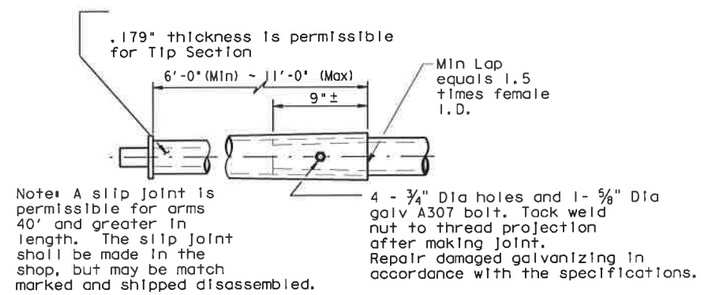

SLIP JOINT DETAIL

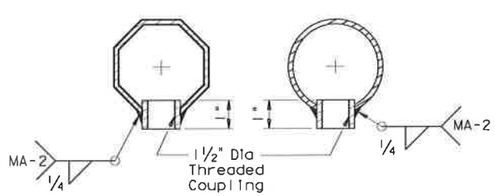

COUPLING DETAILS

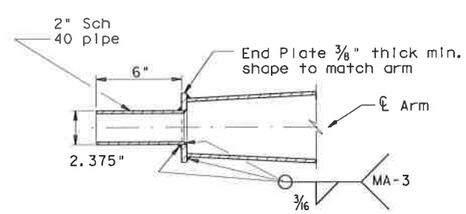

TENON DETAIL

GENERAL NOTES:

Design conforms to 1994 AASHTO Standard Specifications for Structural Supports for Highway Signs, Luminaires, and Traffic Signals and Interim Specifications thereto. Design Wind Speed equals 80 mph plus a 1.3 gust factor.

Poles are designed to support one 8'-0" luminaire arm, one 9'-0" internally lighted street name sign and one traffic signal arm with a length as tabulated. The specified luminaire load applied at the end of the luminaire arm equals 75 lbs vertical dead load plus the horizontal wind load on an effective projected area of 1.5 sq ft. The specified internally lighted street name sign load applied 4.5 ft from the centerline of the pole equals 85 lbs vertical dead load plus horizontal wind load on an effective projected area of 11.5 sq ft. The specified signal load applied at the end of the traffic signal arm equals 180 lbs vertical dead load plus the horizontal wind load on an effective projected area of 32.4 sq ft (actual area times drag coefficient).

See Standard Sheet "MA-D" for pole details, "MA-C" for traffic signal arm connection details, "MA-C (ILSN)" for internally lighted street name sign arm connection details, "LUM-A" for luminaire arm and connection details, "SNS" for internally lighted street name sign details, and "TS-FD" for anchor bolt and foundation details. See "MA-C" for material specifications.

Fabrication shall be in accordance with the Specifications and with the details, dimensions, and weld procedures shown herein. Weld references call for preapproved weld procedures which the Fabricator must obtain prior to fabrication. Miscellaneous welds which do not call for preapproved weld procedures are nevertheless subject to rejection for poor workmanship. Materials, fabrication tolerances, and shipping practices shall meet the requirements of this sheet and the Specifications.

Unless otherwise noted, all parts shall be galvanized in accordance with the Specifications.

Special design require submission of shop drawings in accordance with the item "Steel Structures".

Texas Department of Transportation
Traffic Operations Division

TRAFFIC SIGNAL SUPPORT STRUCTURES

SINGLE MAST ARM ASSEMBLY

(80 MPH WIND ZONE)

SMA-80(2)-96

FILE: SMA-80.DGN	DN: MS	CK: JSY	DW: MMF	CK: JSY
© TxDOT August 1995	DIST	FED REG	FEDERAL AID PROJECT	SHEET
REVISIONS	SAT	6		680
5-96	COUNTY		CONTROL	SECT	JOB	HIGHWAY
	BEXAR		2708	01	022, ETC.	FM2696

DISCLAIMER:
The use of this standard is governed by the "Texas Engineering Practice Act". No warranty of any kind is made by TxDOT for any purpose whatsoever. TxDOT assumes no responsibility for the conversion of this standard to other formats or for incorrect results or damages resulting from its use.

LEVELS ON
1 2 3 4 5 6 7 8 9 0 1 2 3 4 5 6
7 8 9 20 21 22 23 24 25 26 27 28 29 30 31 32
33 34 35 36 37 38 39 40 41 42 43 44 45 46 47 48
49 50 51 52 53 54 55 56 57 58 59 60 61 62 63
ACC: d48hplqt/usr/d482517
LV=1.2 for English 1.3 for Metric

ARM SIZE		A	B	C	D	E	CONN BOLT DIA
D_1	ǂ						
In.	In.	In.	In.	In.	In.	In.	In.
6.5	.179	12	9	9	6	1	1
7.5	.179	13	9	10	6	1	1
8.0	.179	14	10	11	7	1 ¼	1 ¼
9.0	.179	16	11	13	8	1 ¼	1 ¼
9.5	.179	17	12	14	9	1 ¼	1 ¼
9.5	.239	18	12	15	9	1 ¼	1 ¼
10.0	.239	18	12	15	9	1 ¼	1 ¼
10.5	.239	18	13	15	10	1 ½	1 ½
11.0	.239	18	13	15	10	1 ½	1 ½

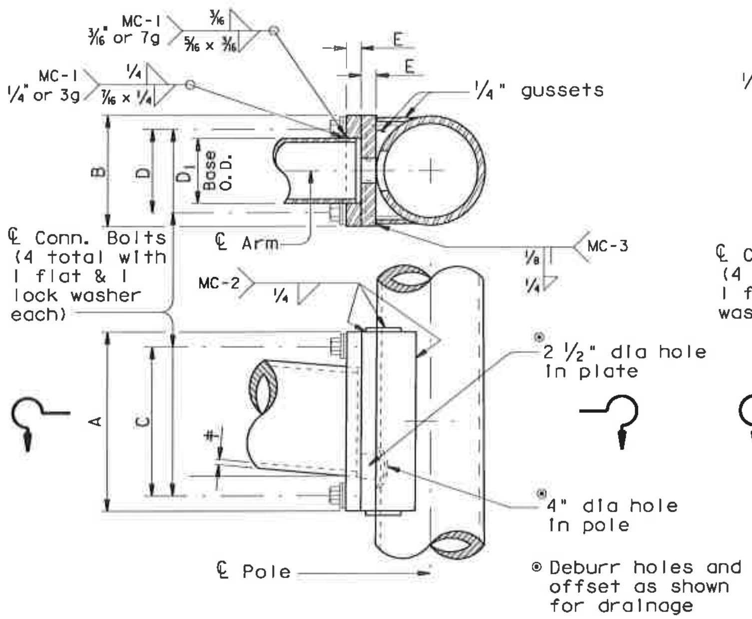

FIXED MOUNT DETAIL 1

ARM SIZE		A	B	C	D	E	CONN BOLT DIA
D_1	ǂ						
In.	In.	In.	In.	In.	In.	In.	In.
7.0	.179	11	11	8	8	1 ¼	1 ¼
7.5	.179	11	11	8	8	1 ¼	1 ¼
8.0	.179	11	11	8	8	1 ¼	1 ¼
9.0	.179	13	13	10	10	1 ¼	1 ¼
10.0	.179	13	13	10	10	1 ¼	1 ¼
9.5	.239	13	13	10	10	1 ¼	1 ¼
10.0	.239	14	14	11	11	1 ½	1 ½
11.0	.239	14	14	11	11	1 ½	1 ½
11.5	.239	14	14	11	11	1 ½	1 ½

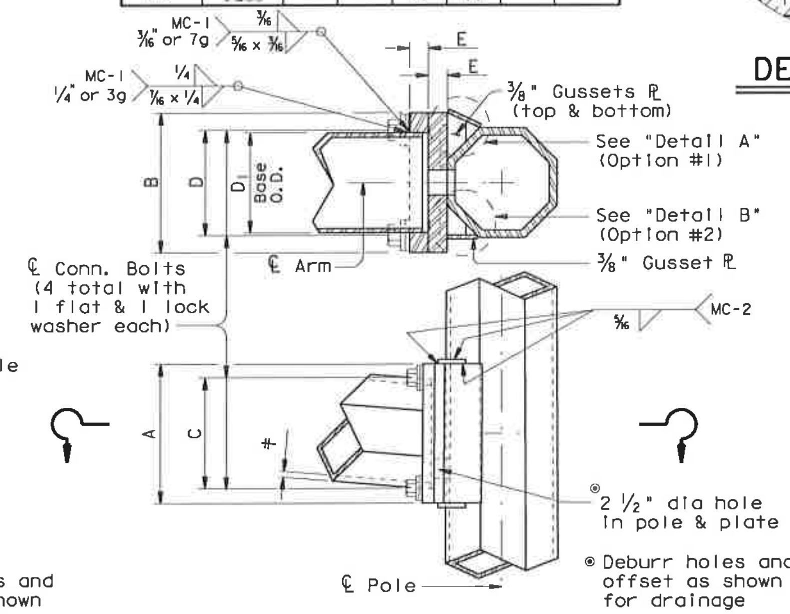

FIXED MOUNT DETAIL 2

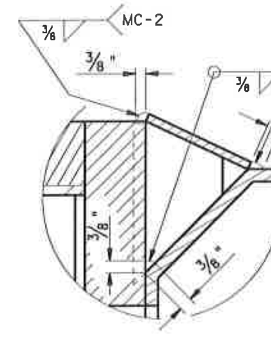

DETAIL A

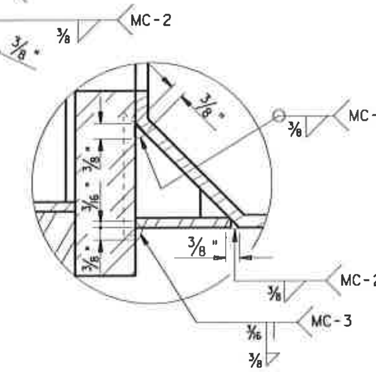

DETAIL B

MATERIALS	
Round Shafts or Polygonal Shafts	ASTM A595 GR A, ASTM A570 GR 50, ASTM A607 GR 50, ASTM A572 GR 50 or A36M50
Plates (1)	ASTM A36 OR A572 GR 50 or A595(2) or A36M50
Connection Bolts	ASTM A325 except where noted
Pin Bolts	ASTM A325
Pipe	ASTM A53 GR A or B, or A501
Misc. Hardware	Galvanized steel or stainless steel or as noted

(1) Any of the materials listed for plates may be used where the drawings do not specify a particular Grade designation.

(2) If A595 material is used, it need not be cold worked to A595 requirments, but material must have 40 ksi minimum yield prior to fabrication.

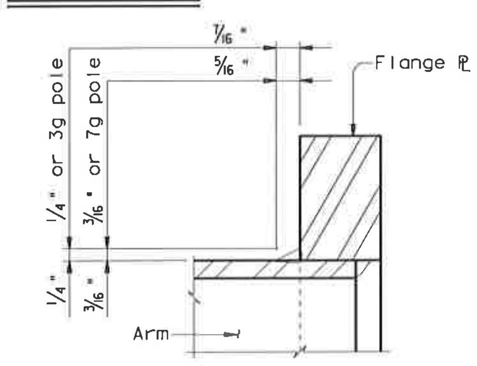

FIXED MOUNT ARM

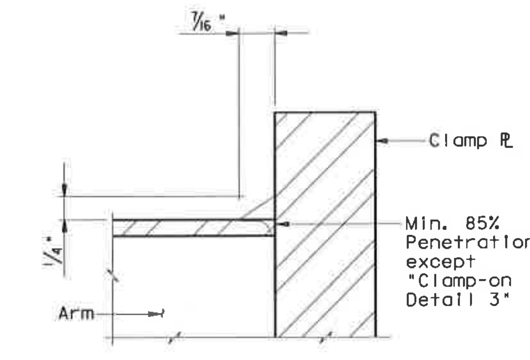

CLAMP-ON ARM

ARM BASE WELD DETAILS

ARM SIZE		A	F	CONN. BOLTS		PIN BOLTS	
D_1	ǂ			No.	Dia	No.	Dia
In.	In.	In.	In.	ea.	In.	ea.	In.
6.5	.179	12	8	4	* ⅞	2	⅝
7.5	.179	14	8	4	1	2	⅝
8.0	.179	14	8	4	1	2	⅝
9.0	.179	16	10	4	1	2	⅝
9.5	.179	18	12	4	1 ¼	3	⅝
9.5	.239	18	12	4	1 ¼	3	⅝
10.0	.239	18	12	4	1 ¼	3	⅝

*1" Dia connection bolts are permissible

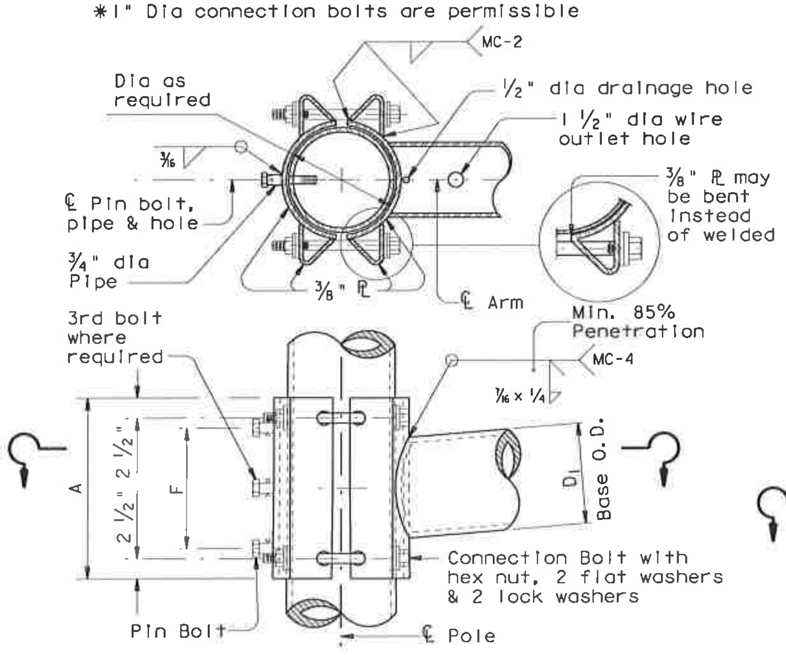

CLAMP-ON DETAIL 1

ARM SIZE		A	F	T	CONN. BOLTS		PIN BOLTS	
D_1	ǂ				No.	Dia	No.	Dia
In.	In.	In.	In.	In.	ea.	In.	ea.	In.
7.0	.179	12	8	¾	4	¾	2	⅝
7.5	.179	14	8	¾	4	¾	2	⅝
8.0	.179	14	8	¾	4	¾	2	⅝
9.0	.179	16	10	⅞	4	1	2	⅝
10.0	.179	18	10	⅞	4	1	2	⅝
9.5	.239	18	10	1	6	1	3	⅝
10.0	.239	18	10	1	6	1	3	⅝

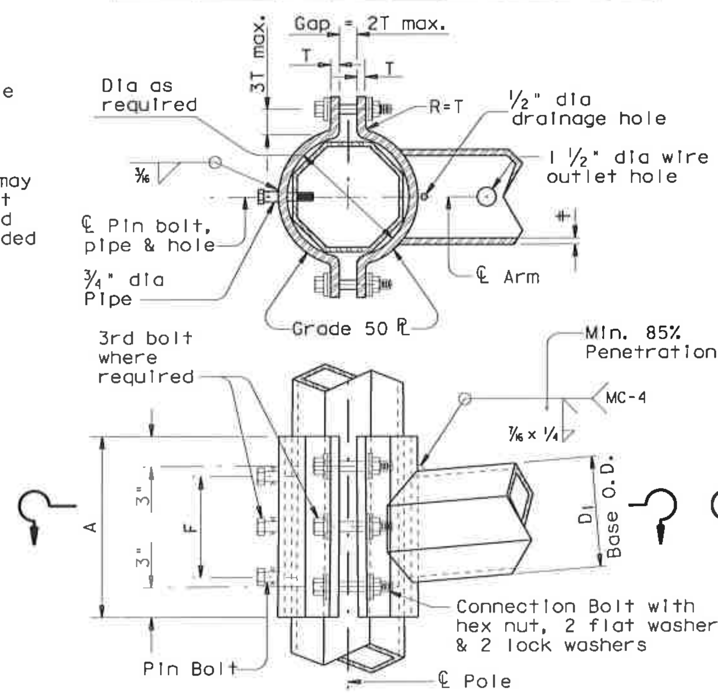

CLAMP-ON DETAIL 2

ARM SIZE		A	F	CONN. BOLTS		PIN BOLTS	
D_1	ǂ			No.	Dia	No.	Dia
In.	In.	In.	In.	ea.	In.	ea.	In.
6.5	.179	12	8	4	1	2	⅝
7.5	.179	14	8	4	1	2	⅝
8.0	.179	14	8	4	1	2	⅝
9.0	.179	16	10	4	1	2	⅝
9.5	.179	18	12	6	1	3	⅝
9.5	.239	18	12	6	1	3	⅝
10.0	.239	18	12	6	1	3	⅝

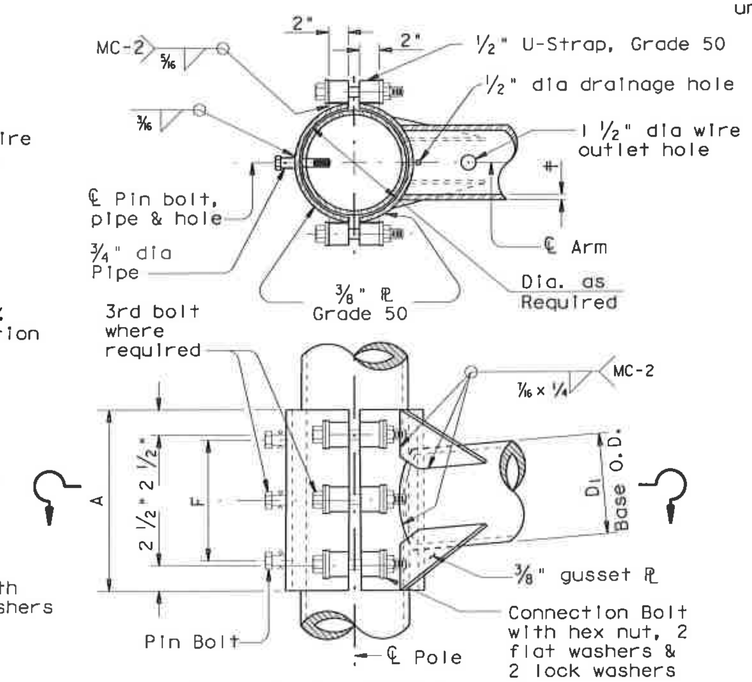

CLAMP-ON DETAIL 3

GENERAL NOTES:

Clamp-on details are used for the second arm on dual mast arm assemblies. A Maximum 1 ½" wide vertical slotted hole may be cut in the front clamp plate to facilitate drainage during galvanizing. The slot shall be centered behind the arm and shall be no longer than the arm diameter minus 1"

Fixed mount details are used for single mast arm assemblies and for the first arm on dual mast arm assemblies.

Where duplicate parts occur on a detail, welds shown for one part shall apply to all similar parts on the detail.

Pin bolts are required to prevent rotation of clamp-on arms under design wind forces.

NOTE:

Pin bolts shall be A325 with threads excluded from the shear plane. Pin bolt and ¾" dia pipe shall have 3/16" dia holes for a ⅛" dia galvanized cotter pin. Back clamp plate shall be furnished with a ¾" dia hole for each pin bolt. An 11/16" dia hole for each pin bolt shall be field drilled through the pole after arm orientations have been approved by the Engineer.

DISCLAIMER:
The use of this standard is governed by the "Texas Engineering Practice Act". No warranty of any kind is made by TxDOT for any purpose whatsoever. TxDOT assumes no responsibility for the conversion of this standard to other formats or for incorrect results or damages resulting from its use.

ACC: d48hplq:/usr/d482517
LV=1,2 for English 1,3 for Metric

Texas Department of Transportation
Traffic Operations Division

STANDARD ASSEMBLY FOR TRAFFIC SIGNAL SUPPORT STRUCTURES

MAST ARM CONNECTIONS

MA-C-96

FILE: MA-C.DGN	DN: MS	CK: JSY	DW: MMF	CK: JSY
©TxDOT August 1995	DIST	FED REG	FEDERAL AID PROJECT *	SHEET
REVISIONS 5-96	SAT	6		601
	COUNTY	CONTROL	SECT	JOB	HIGHWAY
	BEXAR	2708	01	022, ETC.	FM2696

DISCLAIMER
The use of this standard is governed by the "Texas Engineering Practice Act". No warranty of any kind is made by TxDOT for any purpose whatsoever. TxDOT assumes no responsibility for the conversion of this standard to other formats or for incorrect results or damages resulting from its use.

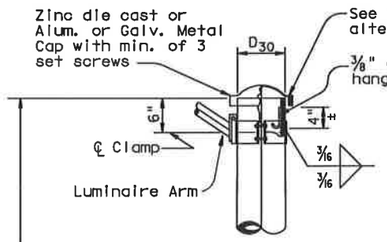

DETAIL A
(for pole with luminaire)

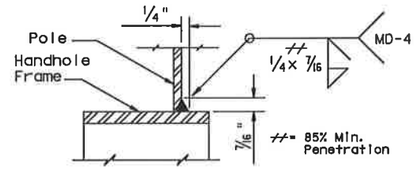

DETAIL E

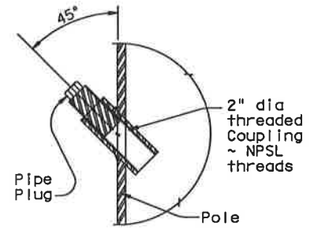

COUPLING DETAIL

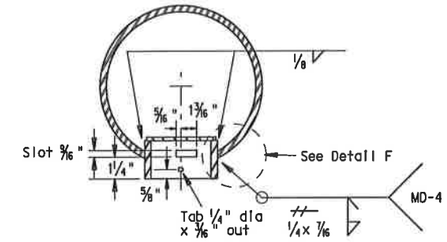

SECTION C-C

Opening for access compartment shall be no more than 1/16 inch wider than the access compartment itself.

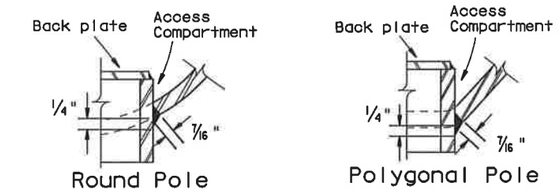

DETAIL F

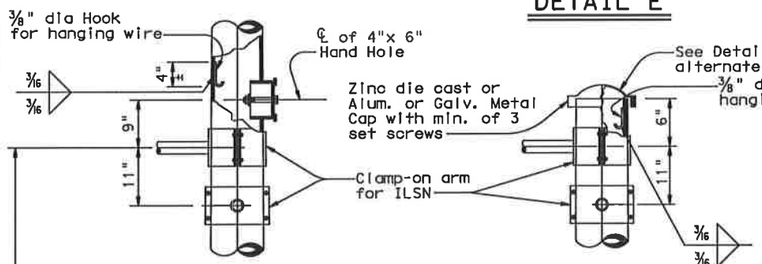

DETAIL J
(If ILSN applied)

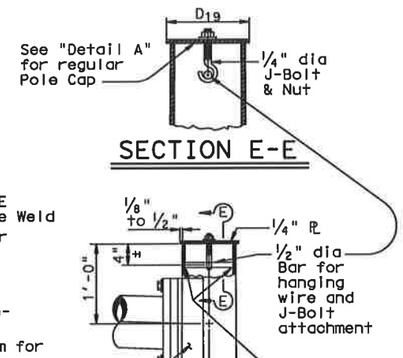

SECTION E-E

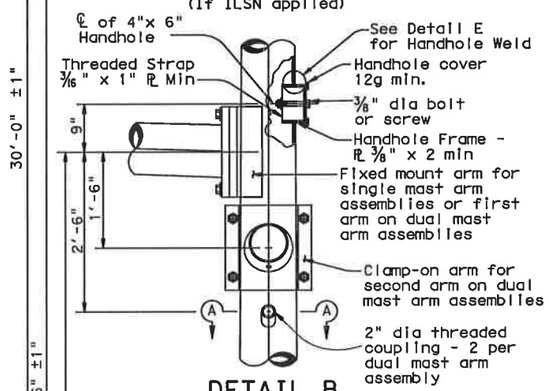

DETAIL B
(for 30' pole with luminaire and ILSN sign)

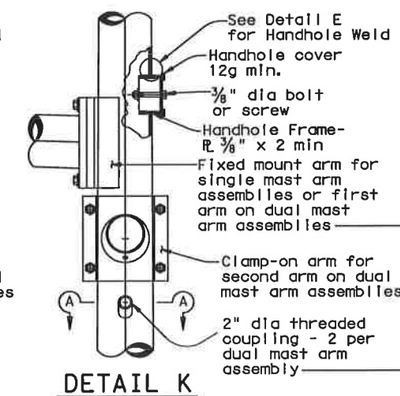

DETAIL K
(for 24' pole with ILSN sign and no luminaire)

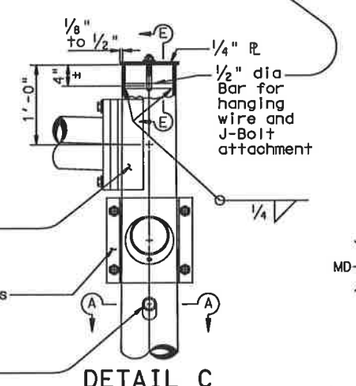

DETAIL C
(for 19' pole with no ILSN sign and no luminaire)

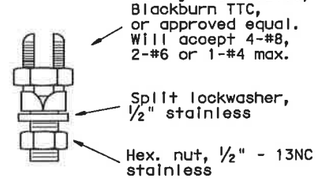

COPPER GROUND CONNECTOR

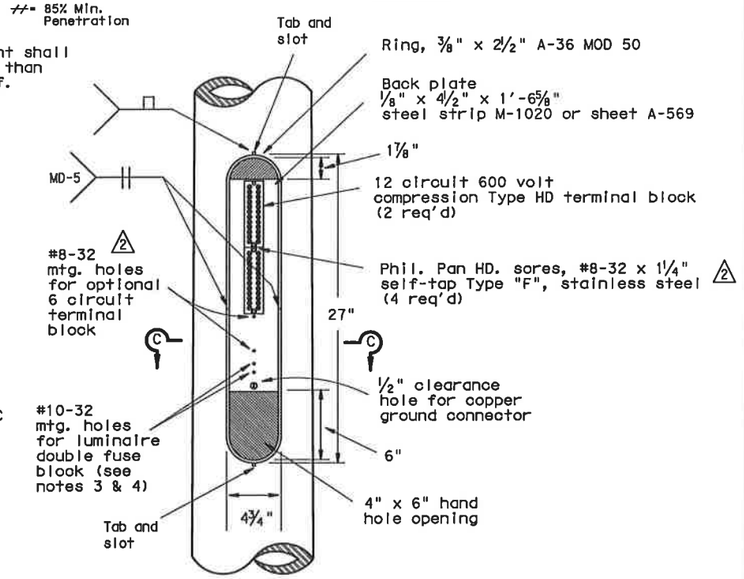

ACCESS COMPARTMENT

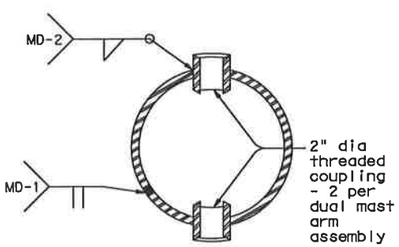

SECTION A-A

1. The cover shall be one piece formed from ABS plastic, shall be a pearl gray color, and shall be suitable for exposure to harsh sunlight and extreme weather. Cover shall latch with two screw latches and shall fit tightly to the enclosure ring to create a rainproof seal. Latch screws shall be 1/4-20 stainless flat socket head screws with tamper proof feature.
2. The pole manufacturer shall provide with each pole a separate kit consisting of: one cover with two latching assemblies, two terminal strips (Marathon #985GP12CU or approved equal), four #8-32 x 1 1/4" self tapping type "F" stainless steel pan head screws, and one ground connector (Blackburn TTC, Burndy KC22J12T13, or Ilsco SSS-5). The traffic signal contractor shall install the kit items in the field.
3. The screw hole spacing on the enclosure back plate shall be for two Marathon #985GP12 terminal strips, one Marathon #985GP06CU terminal strip, and one Bussmann #BM6032B fuse block.
4. Install one Bussmann #BM6032B, Littelfuse #L60030M-2C, or Ferraz-Shawmut #30352 fuse block for poles where luminaires are to be installed.

Anchor Bolt Diameter	Bolt Hole Diameter	Slot Length	Bolt Circle Diameter	Base PL Dim. L x T	Adjust. Range
1 1/2"	1 3/4"	3 1/2"	17"	18" x 1 1/2"	13.4°
1 3/4"	2"	4"	19"	20" x 1 3/4"	13.5°
2"	2 1/4"	4 1/2"	21"	22" x 2"	13.6°
2 1/4"	2 1/2"	5"	23"	24" x 2 1/4"	13.7°

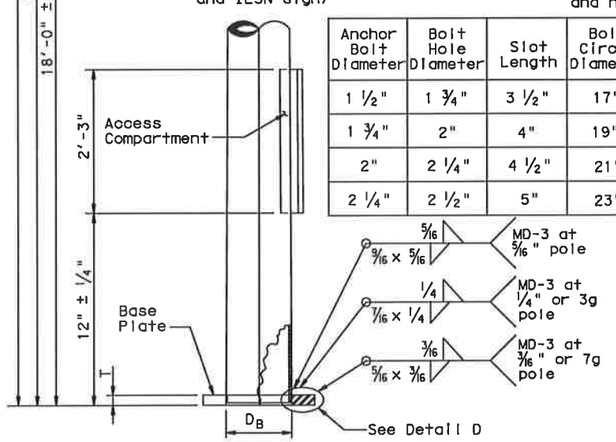

POLE ELEVATION

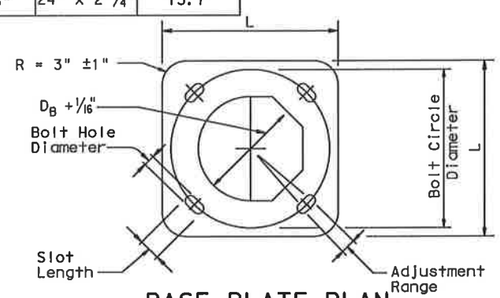

BASE PLATE PLAN

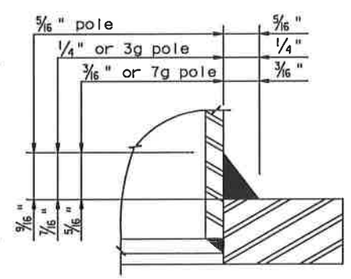

DETAIL D

1 10/03 Revision
Revised notes, and remove detail.

2 2/07 Revision
Revised dimension of terminal-block screw.

STANDARD PLANS
Texas Department of Transportation
Traffic Operations Division

TRAFFIC SIGNAL SUPPORT STRUCTURES MAST ARM POLE DETAILS

MA-D-07

©TxDOT August 1995	DN-MS	CK-JSY	DW-FDN	CK-CAL
REVISIONS 8-99, 10-00, 10-03, 2-07	STATE DISTRICT	FEDERAL REGION 6	FEDERAL AID PROJECT	SHEET 682
	COUNTY	CONTROL	SECTION	JOB / HIGHWAY

DISPLAYED
ACC:

FOUNDATION DESIGN TABLE

FDN TYPE	DRILLED SHAFT DIA	REINFORCING STEEL: VERT BARS	REINFORCING STEEL: SPIRAL & PITCH	DRILLED SHAFT LENGTH-ft (4), (5), (6): TEXAS CONE PENETROMETER N blows/ft: 10	15	40	ANCHOR BOLT DESIGN (1): ANCHOR BOLT DIA	Fy (ksi)	BOLT CIR DIA	ANCHOR TYPE	FOUNDATION DESIGN LOAD (2): MOMENT K-ft	SHEAR Kips	TYPICAL APPLICATION
24-A	24"	4- #5	#2 at 12"	5.7	5.3	4.5	¾"	36	12 ¾"	1	10	1	Pedestal pole, pedestal mounted controller.
30-A	30"	8- #9	#3 at 6"	11.3	10.3	8.0	1 ½"	55	17"	2	87	3	Mast arm assembly. (see Selection Table)
36-A	36"	10- #9	#3 at 6"	13.2	12.0	9.4	1 ¾"	55	19"	2	131	5	Mast arm assembly. (see Selection Table) 30' strain pole with or without luminaire.
36-B	36"	12- #9	#3 at 6"	15.2	13.6	10.4	2"	55	21"	2	190	7	Mast arm assembly. (see Selection Table) Strain pole taller than 30' & strain pole with mast arm
42-A	42"	14- #9	#3 at 6"	17.4	15.6	11.9	2 ¼"	55	23"	2	271	9	Mast arm assembly. (see Selection Table)

FOUNDATION SELECTION TABLE FOR STANDARD MAST ARM PLUS ILSN SUPPORT ASSEMBLIES (ft)

		FDN 30-A	FDN 36-A	FDN 36-B	FDN 42-A
80 MPH DESIGN WIND SPEED	MAX SINGLE ARM LENGTH	32' (1)	48'		
	MAXIMUM DOUBLE ARM LENGTH COMBINATIONS	24' X 24'			
		28' X 28'			
		32' X 28'	32' X 32'		
			36' X 36'		
			40' X 36'		
			44' X 28'	44' X 36'	
100 MPH DESIGN WIND SPEED	MAX SINGLE ARM LENGTH	(1)	36'	44'	
	MAXIMUM DOUBLE ARM LENGTH COMBINATIONS		24' X 24'		
			28' X 28'		
			32' X 24'	32' X 32'	
				36' X 36'	
				40' x24'	40' X 36'
					44' x 36'

EXAMPLE:
1. For 80mph design wind speed, foundation 30-A can support up to a 32' arm with another arm up to 28'
2. For 100mph design wind speed, foundation 36-A can support a single 36' mast arm.

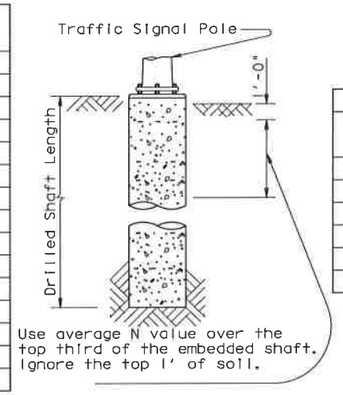

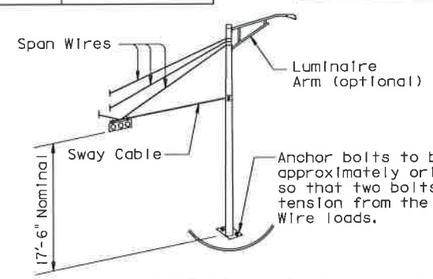

TYPICAL STRAIN POLE ASSEMBLY

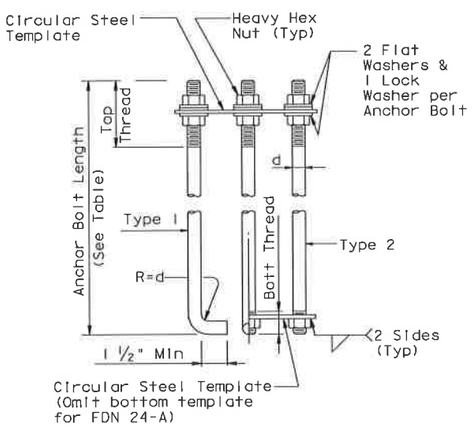

ANCHOR BOLT ASSEMBLY

INSTALLATION PROCEDURE:
Threads of anchor bolts shall be coated with pipe joint compound prior to installation of upper nuts when erecting pole. After pole is plumbed and in permanent alignment, the exposed threads of painted bolts shall be cleaned and an additional coating of zinc-rich paint applied to seal the bolt thread-nut joint.

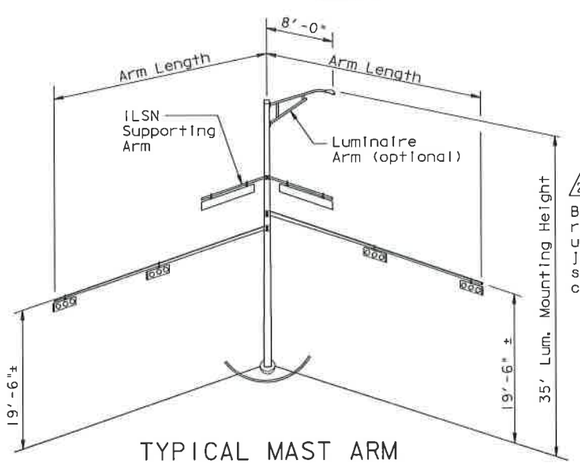

TYPICAL MAST ARM ASSEMBLY

NOTES:
1. Anchor bolt design develops the foundation capacity given under Foundation Design Loads.
2. Foundation Design Loads are the allowable moments and shears at the base of the structure.
3. Foundations may be listed seperately or grouped according to similarity of location and type. Quantities are for the Contractor's information only.
4. Field Penetrometer readings at a depth of approximately 3 to 5 feet may be used to adjust shaft lengths.
5. If rock is encountered, the Drilled Shaft shall extend a minimum of two diameters into solid rock.
6. Decimal lengths in Design Table are to allow interpolation for other penetrometer values. Round to nearest foot for entry into Summary Table.

ANCHOR BOLT & TEMPLATE SIZES

BOLT DIA IN.	(7) BOLT LENGTH	TOP THREAD	BOTT THREAD	BOLT CIRCLE	R2	R1
¾"	1'-6"	3"	—	12 ¾"	7 ⅛"	5 ⅝"
1 ½"	3'-4"	6"	2"	17"	10"	7"
1 ¾"	3'-10"	7"	2 ¼"	19"	11 ¼"	7 ¾"
2"	4'-3"	8"	2 ½"	21"	12 ½"	8 ½"
2 ¼"	4'-9"	9"	3"	23"	13 ¾"	9 ¼"

(7) Min dimensions given, longer bolts are acceptable.

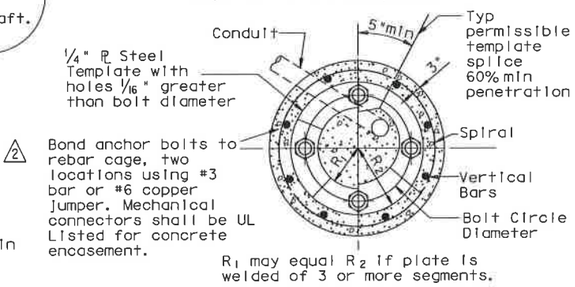

TOP VIEW

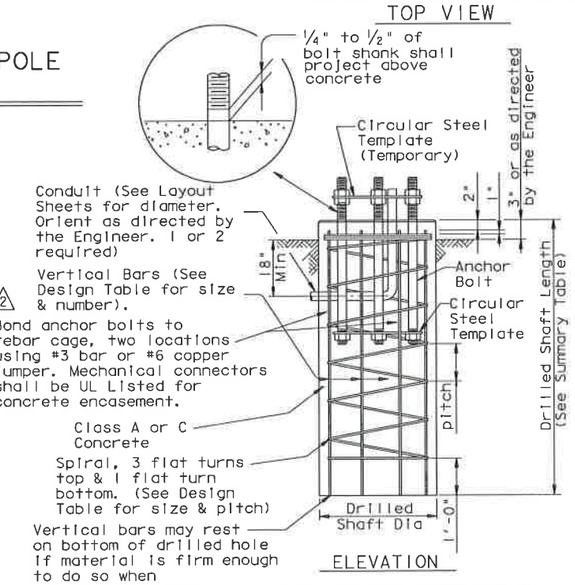

ELEVATION

FOUNDATION DETAILS

⊛ FOUNDATION SUMMARY TABLE (3)

LOCATION IDENTIFICATION	AVG. N BLOW /ft.	FDN TYPE	NO. EA	DRILLED SHAFT LENGTH (6) (FEET): 24-A	30-A	36-A	36-B	42-A
BLANCO-HUEBNER	10	A	1	6				
	10	A	1	16				
	10	A	1			24		
BLANCO-WILDERNESS OAK	10	A	2	6				
	10	A	1		12			
	10	A	2			14		
TOTAL DRILLED SHAFT LENGTHS				34	12	52		

STATE OF TEXAS — JOSE A. SANCHEZ — 87890 — LICENSED PROFESSIONAL ENGINEER

JOSE A. SANCHEZ — 2007.12.07 — DATE

THIS SEAL SUBSTANTIATES THE ITEMS IDENTIFIED WITH AN ⊛ ONLY AND DOES NOT CONFIRM THE DESIGN STANDARDS (BY OTHERS) PRESENTED HEREON

GENERAL NOTES:
Design conforms to 1994 AASHTO Standard Specifications for Structural Supports for Highway Signs, Luminaires and Traffic Signals and interim revisions thereto.
Reinforcing steel shall conform to Item 440.
Concrete shall be Class A or C.
Threads for anchor bolts and nuts shall be rolled or cut threads of unified national coarse thread series except for A193B7 bolts which shall have 8 pitch thread series. Bolts and nuts shall have Class 2A and 2B fit tolerances. Galvanized nuts shall be tapped after galvanizing.
Anchor bolts that are 1" in diameter or less shall conform to ASTM A36. Anchor bolts larger than 1" in diameter shall conform to A36M55 in accordance with the item, "Anchor Bolts" or ASTM A193B7 or A687. Galvanize or coat with zinc-rich paint a minimum of the upper 14 inches of all anchor bolts unless otherwise noted. Exposed nuts shall be galvanized or coated with zinc-rich paint. Washers shall be galvanized. Templates and embeded nuts need not be galvanized.

11/99 Revision

(1) Changed to facilitate new terminal strip enclosure

(2) Changed from ground rod to UFER ground

STANDARD PLANS
Texas Department of Transportation
Traffic Operations Division

TRAFFIC SIGNAL POLE FOUNDATION

TS-FD-99 (MOD)

©TxDOT August 1995	DN - MS	CK - JSY	DW - MAO/MWF	CK - JSY/TEB
REVISIONS 5-96 11-99	STATE DISTRICT: SAT	FEDERAL REGION: 6	FEDERAL AID PROJECT	SHEET 623

COUNTY	CONTROL	SECTION	JOB	HIGHWAY
BEXAR	2708	01	022, ETC	FM2696

DISCLAIMER:
The use of this standard is governed by the "Texas Engineering Practice Act". No warranty of any kind is made by TxDOT for any purpose whatsoever. TxDOT assumes no responsibility for the conversion of this standard to other formats or for incorrect results or damages resulting from its use.

LEVELS D... ED
ACC: d48hplqt/usr/d482517
LV=1,2 for English 1,3 for Metric

MATERIALS	
Pole or Arm Simplex	ASTM A27 GR 65-35 or A148 GR 80-50 or A576 GR 1021 (4) or A36 (Arm only)
Arm Pipes	ASTM A53 GR A or B or A500 GR B or A501 or A595 (2) or A715 GR 50
Arm Plates (3)	ASTM A36 or A572 GR50 (1) or A595 GR A or A588
Misc.	ASTM designations as noted

(1) ASTM A36M50 steel as described in Item 442 "Metal for Structures" may be used in lieu of A 572 GR 50.

(2) If A595 GR A material is used, arm need not be cold worked to A595 requirements, but material must have 40 ksi minimum yield prior to fabrication.

(3) Either of the materials listed for pates may be used where the drawings do not specify a particular ASTM designation.

(4) A576 must be suitable for forging and also meet minimum tensile strength of 65 ksi, minimum yield of 35 ksi, and elongation in 2 inches of 22 percent.

(5) Dimensional limits are given to show acceptable variation in design. All of a Fabricator's production of a particular arm length shall have the same dimensions within specified tolerances.

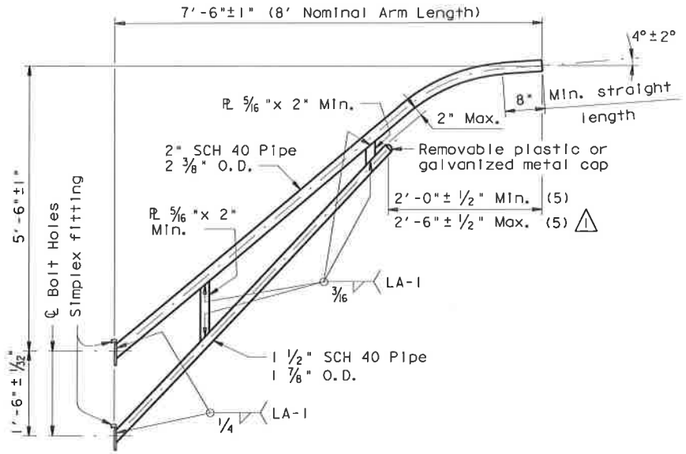

8-FOOT LUMINAIRE ARM

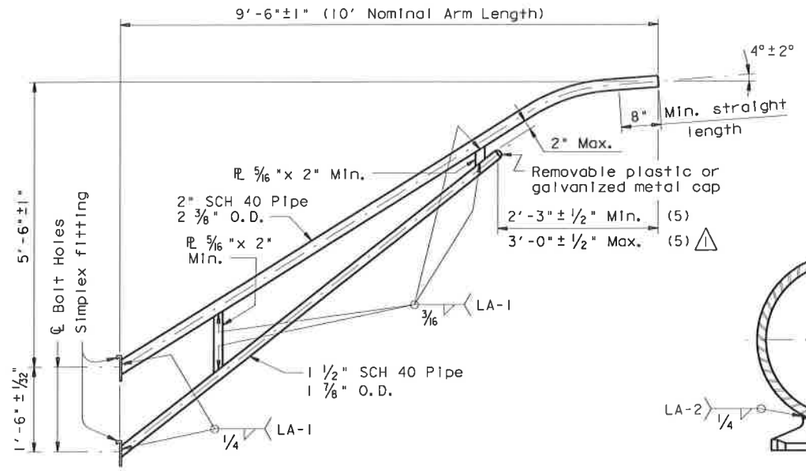

10-FOOT LUMINAIRE ARM

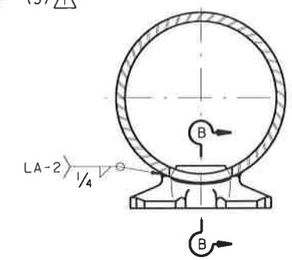

DIRECT ATTACHMENT DETAIL

GENERAL NOTES:

Design conforms to 1994 AASHTO Standard Specifications for Structural Supports for Highway Signs, Luminaires, and Traffic Signals and Interim Revisions thereto. Design Wind Speed equals 90 mph plus a 1.3 gust factor. Arms are designed to support a 75 lb. luminaire having an effective projected area (actual area times drag coefficient) of 1.5 sq. ft.

Materials and fabrication shall be in accordance with the Specificatons and with the details, dimensions, and weld procedures shown herein. Weld references call for preapproved weld procedures which the Fabricator must obtain prior to fabrication. In the absense of specified Fabricaton tolerances, dimensions shall be within the tolerances generally obtainable in normal fabrication practice.

Unless otherwise noted, all parts shall be galvanized after fabrication in accordance with the Specifications.

Special designs require submission of shop drawings in accordance with the Item "Steel Structures".

Each pole simplex fitting shall be supplied with 2 A325 bolts and 2 lock washers of the size specified. The bolts and lock washers shall be secured to the pole with the other hardware items called for in the plans. When clamp attachment is specified, the Fabricator shall ship the clamp assembly securely attached to the pole at the location shown on the plans.

If clamp assemblies are ordered without poles, the Fabricator shall ship one upper and one lower clamp assembly together in a single package, including all nuts and washers required for the clamps and simplex fittings.

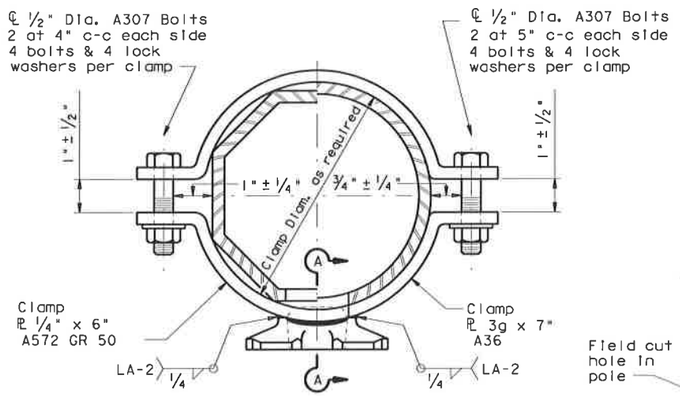

CLAMP ATTACHMENT DETAIL NO. 1
(HALF SECTION)

CLAMP ATTACHMENT DETAIL NO. 2
(HALF SECTION)

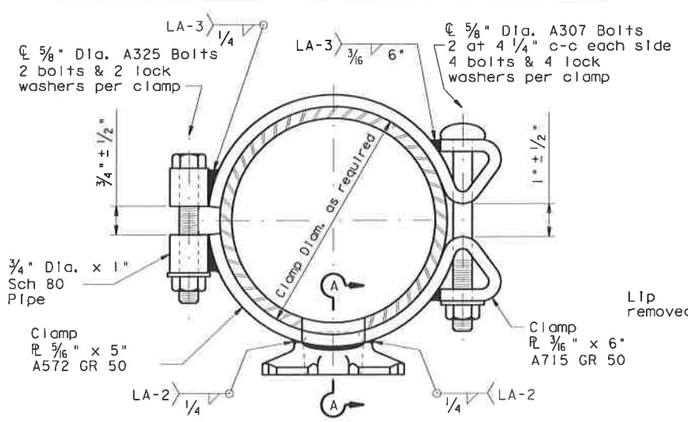

CLAMP ATTACHMENT DETAIL NO. 3
(HALF SECTION)

CLAMP ATTACHMENT DETAIL NO. 4
(HALF SECTION)

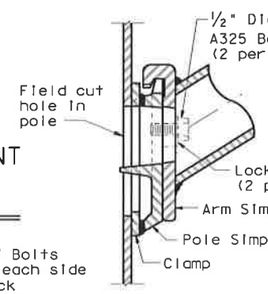

UPPER SIMPLEX FITTING

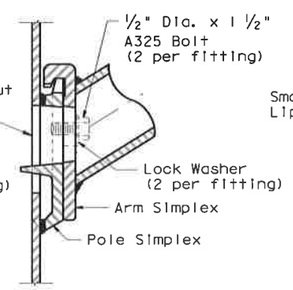

UPPER SIMPLEX FITTING

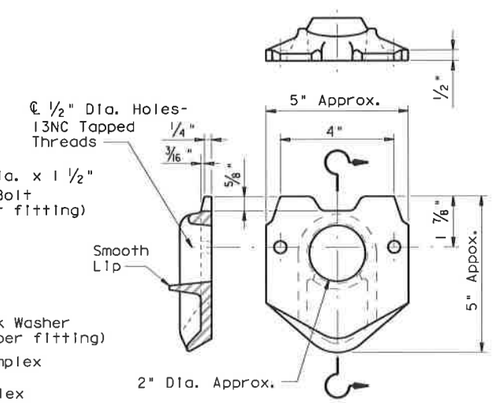

POLE SIMPLEX DETAIL

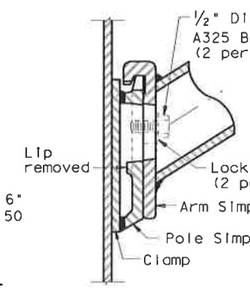

LOWER SIMPLEX FITTING

SECTON A-A

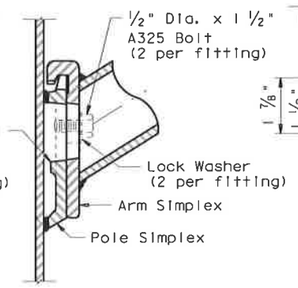

LOWER SIMPLEX FITTING

SECTON B-B

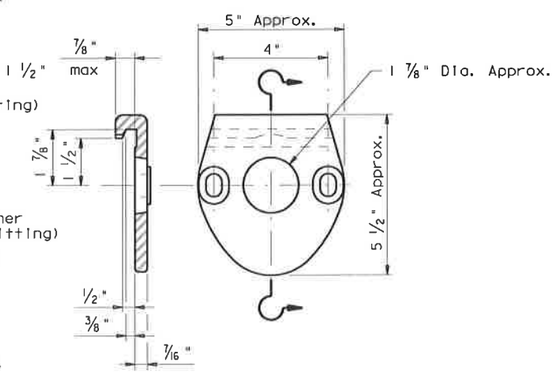

ARM SIMPLEX DETAIL

△1 1-99 - minor typo correction

DISCLAIMER:
The use of this standard is governed by the "Texas Engineering Practice Act". No warranty of any kind is made by TxDOT for any purpose whatsoever. TxDOT assumes no responsibility for the conversion of this standard to other formats or for incorrect results or damages resulting from its use.

LEVELS 0 1 2 3 4 5 6 7 8 9 10 11 12 13 14 15 16 17 18 19 20 21 22 23 24 25 26 27 28 29 30 31 32 33 34 35 36 37 38 39 40 41 42 43 44 45 46 47 48 49 50 51 52 53 54 55 56 57 58 59 60 61 62 63 64 65 66 67 68 69 70 71 72 73 74 75 76 77 78 79 80 81 82 83 84 85 86 87 88 89 90 91 92 93 94 95 96 97 98 99

ACC: (LV-1,2 for English, 1,3 for Metric)

Texas Department of Transportation
Traffic Operations Division

STANDARD ASSEMBLY DRAWINGS FOR LUMINAIRE SUPPORT STRUCTURES

ARM DETAILS

LUM-A-99

FILE: lum-a.dgn	DN: LEH	CK: JSY	DW: LTT	CK: TEB	STD:
©TxDOT August 1995	DIST	FED REG	FEDERAL AID PROJECT #		SHEET 684
REVISIONS 5-96 1-99	SAT	6			
	COUNTY		CONTROL	SECT	JOB	HIGHWAY
	BEXAR		2708	01	022, ETC.	FM2696

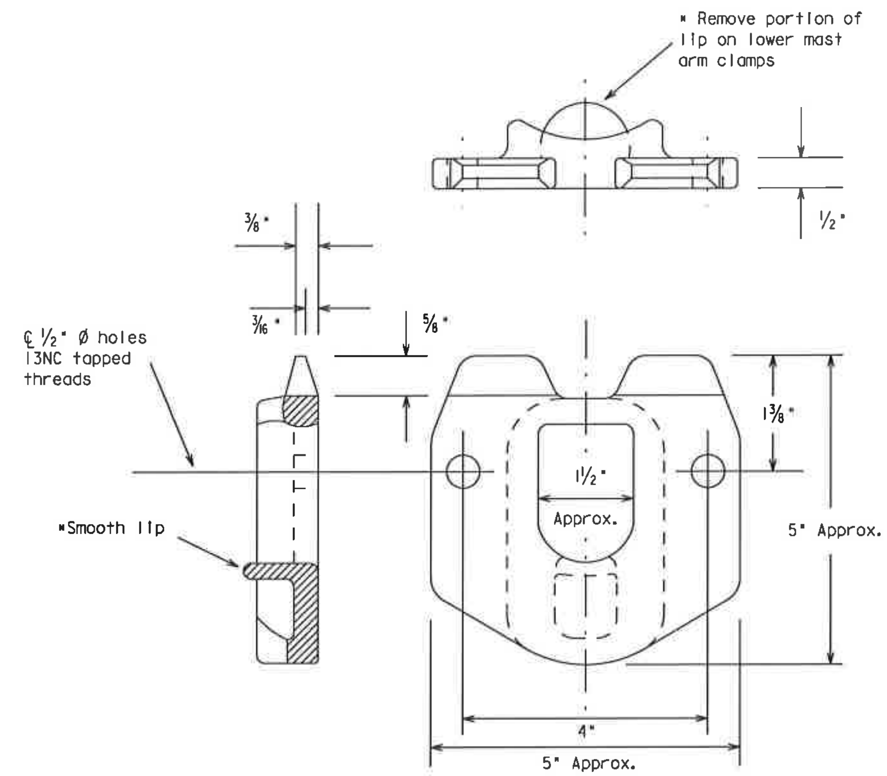

POLE SIMPLEX DETAILS

OTHER MATERIALS:

1. Pole simplex shall be ASTM A27 GR65-35 or A148 GR80-50 or A576 GR1021. ASTM A576 must be suitable for forging and also meet minimum tensile of 65ksi, minimum yield of 35ksi, and elongation in 2 inches of 22 percent.
2. A36M50 steel may be used in lieu of ASTM A572 GR50.
3. Welded tabs and backplates shall be ASTM A-36 steel or better.
4. Nylon insert locknuts shall conform to ASTM A563.

GENERAL NOTES:

1. Materials and fabrication shall be in accordance with the Specifications and with the details, dimensions, and weld procedures shown herein. Weld references call for preapproved weld procedures which the Fabricator must obtain prior to fabrication. In the absense of specified fabrication tolerances, dimensions shall be within the tolerances generally obtainable in normal fabrication practice.
2. All parts shall be galvanized after fabrication in accordance with ASTM 153 or 123. The throat of the Simplex shall be made free of all rough or sharp edges resulting from the galvanizing process.
3. Each simplex fitting shall be supplied with 2 ASTM A325 bolts, 1/2 in. X 1 1/2 in. and 2 lock washers. The bolts and lock washers shall be secured to the clamp with the other hardware items. The Fabricator shall ship clamp assembly together in a single package, including all bolts, nuts, and washers required for the clamp and simplex fitting.
4. Design conforms to 1985 AASHTO "Standard Specifications for Structural Supports for Highway Signs, Luminaires, and Traffic Signals" and interim revisions thereto. Design Wind Speed equals 80 mph plus a 1.3 gust factor. Clamps are designed to support a 75 lb. luminaire having an effective projected area (actual area times drag coefficient) of 1.4 sq.ft., 12 ft. maximum arm length.
5. Each assembly shall consist of one upper piece simplex fitting having a smooth lip and one lower piece simplex fitting with the lip removed.
6. Approximately 2 in. diameter hole in upper most arm clamp.

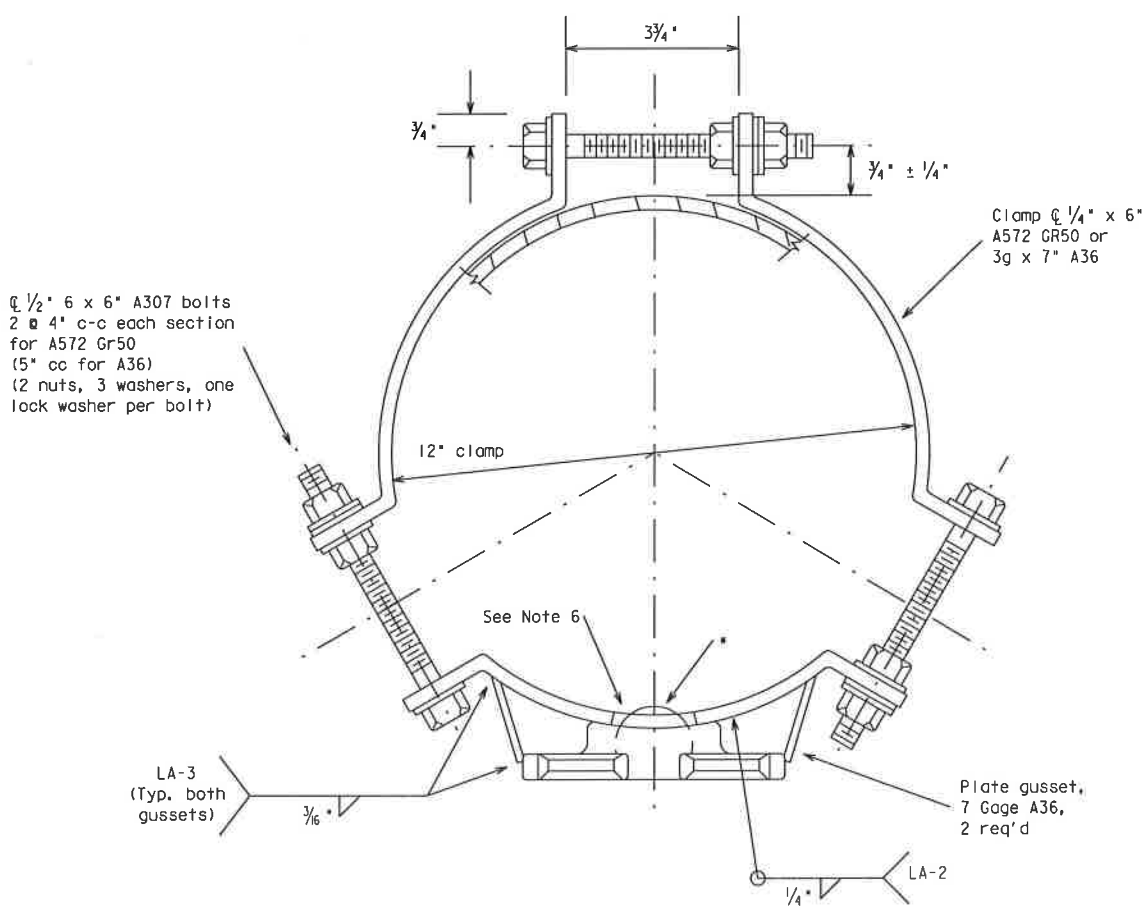

CLAMP DETAIL

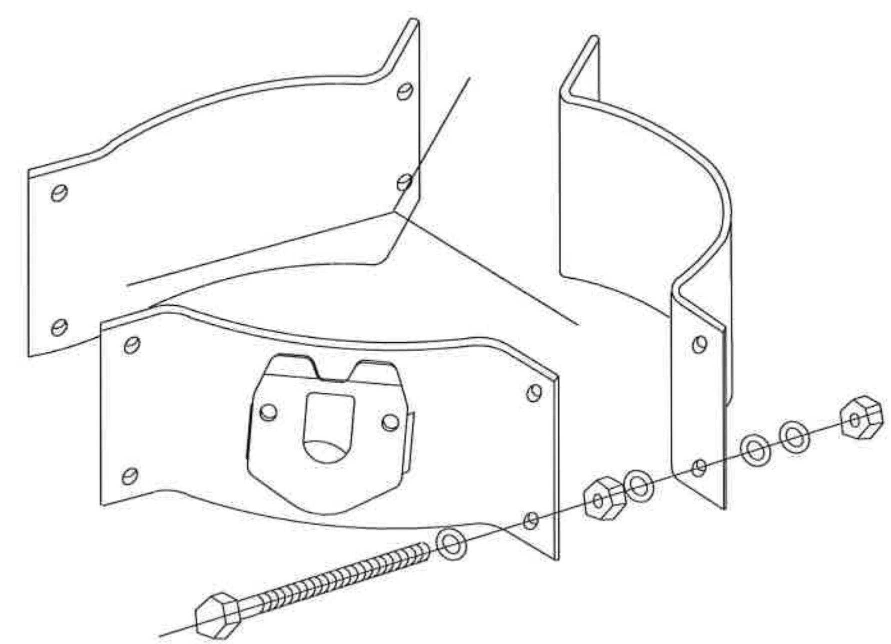

PROJECTION

For 8.9 - 12 inch diameter Signal Poles
(Two req'd for each mast arm)

STANDARD PLANS
Texas Department of Transportation
Traffic Operations Division

CLAMP ON FITTING ASSEMBLY FOR LUMINAIRE MAST ARM

CFA-99

© TxDOT		DN: KAB	CK: RES	DW: FDN	CK: CAL
REVISIONS 11-99	STATE DISTRICT: SAT	FEDERAL REGION: 6	FEDERAL AID PROJECT		SHEET 685
	COUNTY: BEXAR	CONTROL: 2708	SECTION: 01	JOB: 022, ETC	HIGHWAY: FM2696

D-18-6100.001
November 99

DISCLAIMER
The use of this standard is governed by the "Texas Engineering Practice Act". No warranty of any kind is made by TxDOT for any purpose whatsoever. TxDOT assumes no responsibility for the conversion of this standard to other formats or for incorrect results or damages resulting from its use.

DISCLAIMER
The use of this standard is governed by the "Texas Engineering Practice Act". No warranty of any kind is made by TxDOT for any purpose whatsoever. TxDOT assumes no responsibility for the conversion of this standard to other formats or for incorrect results or damages resulting from its use.

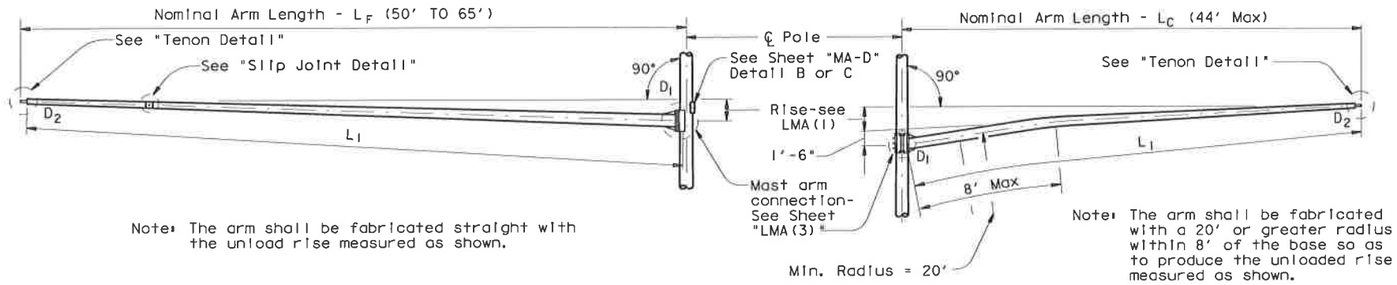

Note: The arm shall be fabricated straight with the unload rise measured as shown.

Note: The arm shall be fabricated with a 20' or greater radius within 8' of the base so as to produce the unloaded rise measured as shown.

FIXED MOUNT TRAFFIC SIGNAL ARM

CLAMP-ON TRAFFIC SIGNAL ARM

(If required, See DMA-80 or DMA-100 Standard Sheets for Clamp-on Arm Details)

Design also conforms to NCHRP Report 412 for fatigue resistance except that there are no stiffeners at the base plate. TxDOT is conducting tests to determine if stiffeners at the base plate will or will not result in optimal performance; depending upon the results of the tests, poles may need a retrofit to ensure optimal fatigue performance.

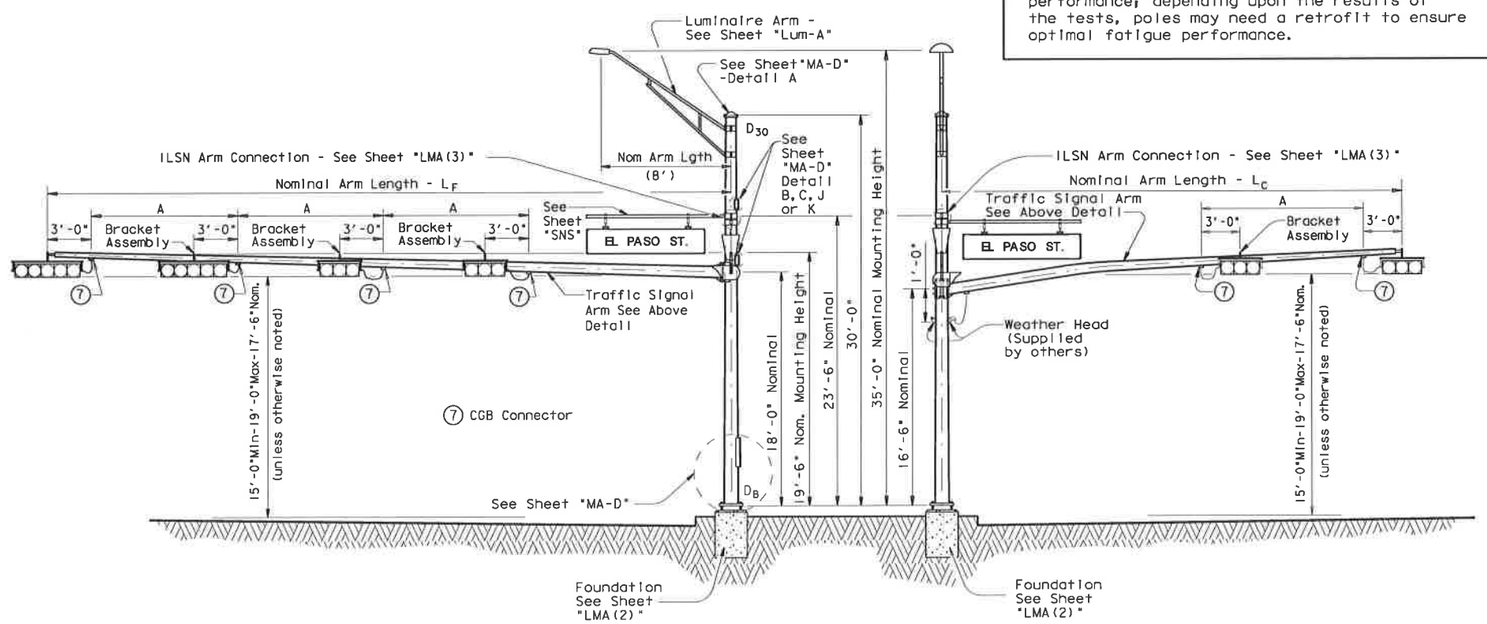

ELEVATION
(Showing fixed mount arm)

STRUCTURE ASSEMBLY

ELEVATION
(Showing clamp mount arm)

TABLE OF DIMENSIONS "A"										
Arm Length	24'	28'	32'	36'	40'	44'	50'	55'	60'	65'
Arm Type II	10'	11'	12'	13'						
Arm Type III			10'	11'	12'	12'				
Arm Type IV							12'	12'	12'	12'

VIBRATION WARNING

Mast Arms of approximately 40'-0" or longer are subject to possible harmonic vertical vibrations in light wind conditions due to unusual combinations of signal numbers, weights or positions, arm-wind orientation, and arm-pole stiffness.

Arms shall be visually inspected in 5 to 20 mph wind conditions after signal head installation and, if vertical movements with a total excursion (max positive to max negative) of more than approximately 8" are observed at arm tip, damping devices or other means shall be fitted to the arm(s).

The necessary damping device(s) or other remedial measures shall be as recommended by the fabricator. Excessive vibrations shall not be allowed to continue for more than two days.

If damping plate is used, the size shall be 16" x 66". The plate must be installed directly above traffic light located nearest the free end.

GENERAL NOTES:

Design conforms to 1994 AASHTO Standard Specifications for Structural Supports for Highway Signs, Luminaires, and Traffic Signals and Interim Specifications thereto. Design Wind Speed can be either 100 mph or 80 mph plus a 1.3 gust factor. If clamp-on traffic signal is required, designs are based on an arm included angle of 90 degrees or more. Angles of less than approximately 75 degrees will require a special design.

Poles are designed to support one 8'-0" luminaire arm, two 9'-0" internally lighted street name signs and two traffic signal arms with limited length combinations. The specified luminaire load applied at the end of luminaire arm equals 75 lbs vertical dead load plus the horizontal wind load on an effective projected area of 1.5 sq ft. The specified internally lighted street name sign applied 4'-6" from the centerline of the pole equals 85 lbs vertical dead load plus the horizontal wind load on an effective projected area of 11.5 sq ft. For 50 ft. to 65 ft. fixed-mount mast arm the specified signal load applied at the end of the traffic signal arm equals 310 lbs vertical dead load plus the horizontal wind load on an effective projected area of 52.0 sq ft. (actual area times drag coefficient). For clamp-on mast arm, the specified signal load applied at the end of the traffic signal arms equals 180 lbs vertical dead load plus the horizontal wind load on an effective projected area of 32.4 sq ft. (actual area times drag coefficient).

Except as noted in sheets 1 thru 3 of 3, also refer to Standard Sheet "MA-D" for pole details, "LUM-A for luminaire arm and connection details, "SNS" for internally lighted street name sign details, and "TS-FD" for anchor bolt and foundation details.

Fabrication shall be in accordance with the Specifications and with the details, dimensions, and weld procedures shown herein. Weld references call for preapproved weld procedures which the Fabricator must obtain prior to fabrication. Miscellaneous welds which do not call for preapproved weld procedures are nevertheless subject to rejection for poor workmanship. Material, fabrication tolerances, and shipping practices shall meet the requirements of this sheet and the Specifications.

Unless otherwise noted, all parts shall be galvanized in accordance with the Specifications.

Special designs require submission of shop drawings in accordance with the Item "Steel Structures".

STANDARD PLANS
Texas Department of Transportation
Traffic Operations Division

TRAFFIC SIGNAL SUPPORT STRUCTURES

LONG MAST ARM ASSEMBLY (50 TO 65 FT) (80 AND 100 MPH WIND ZONE)

LMA(1)-01

Sheet 1 of 4

© TxDOT July 2000

DN: JSY	CK: ARC	DW: TGG	CK: JSY

REVISIONS	STATE DISTRICT	FEDERAL REGION	FEDERAL AID PROJECT	SHEET
4-20-01	SAT	6		686

COUNTY	CONTROL	SECTION	JOB	HIGHWAY
BEXAR	2708	01	022, ETC	FM2696

DISPLAYED
ACC:

DISCLAIMER
The use of this standard is governed by the "Texas Engineering Practice Act". No warranty of any kind is made by TxDOT for any purpose whatsoever. TxDOT assumes no responsibility for the conversion of this standard to other formats or for incorrect results or damages resulting from its use.

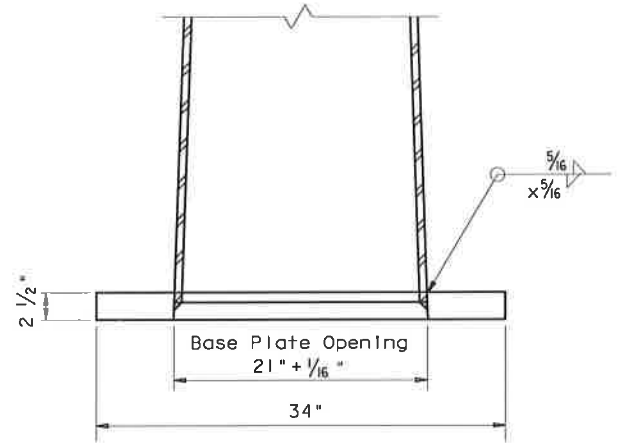

POLE CONNECTION TO BASE PLATE

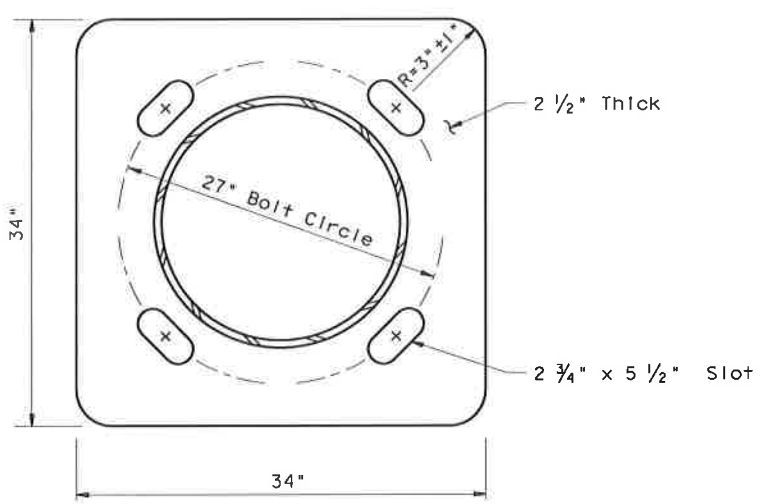

BASE PLATE

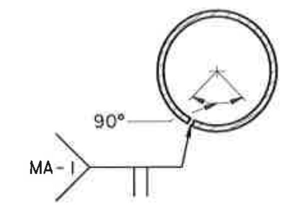

Longitudinal Seam Weld must be oriented within the lower 90° of the signal arm.

ARM WELD DETAIL

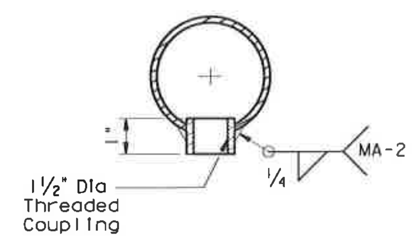

COUPLING DETAIL

Arm Length	ROUND POLES					Foundation Type
	D_B	D_{19}	D_{24}	D_{30}	(1) thk	
ft.	In.	In.	In.	In.	In.	
50', 55' 60', 65'	21.0	18.3	17.6	16.8	.3125	48-A

Arm Length	ROUND ARMS				Rise
	L_1	D_1	D_2	(1) thk	(±2")
ft.	ft.	In.	In.	In.	
50	49	18.5	11.7	.3125	3'- 3"
55	54	18.5	11.0	.3125	3'- 7"
60	59	18.5	10.3	.3125	3'-11"
65	64	18.5	9.6	.3125	4'- 4"

D_B = Pole Base O.D.
D_{19} = Pole Top O.D. with no Luminaire and no ILSN
D_{24} = Pole Top O.D. with ILSN w/out Luminaire
D_{30} = Pole Top O.D. with Luminaire
D_1 = Arm Base O.D.
D_2 = Arm End O.D.
L_1 = Shaft Length
L = Nominal Arm Length

(1) Thickness shown is minimum, thicker materials may be used.

ANCHOR BOLT & TEMPLATE SIZE

Bolt Dia In	Length ǂ	Top Thread	Bottom Thread	Bolt Circle	R2	R1
2 1/2"	5'-3"	10"	3"	27"	16"	11"

ǂ Min dimension given, longer bolts are acceptable.

(1) Anchor bolt design develops the foundation capacity given under Foundation Design Loads.

(2) Foundation Design Loads are the allowable moments and shears at the base of the structure.

(3) Field Penetrometer readings at a depth of approximately 3 to 5 feet may be used to adjust shaft lengths.

(4) If rock is encountered, the Drilled Shaft shall extend a minimum of two diameters into solid rock.

(5) Decimal lengths in Design Table are to allow interpolation for other penetrometer values. Round to nearest foot for entry into Summary Table.

FOUNDATION DESIGN TABLE

FDN TYPE	DRILLED SHAFT DIA	REINFORCING STEEL		DRILLED SHAFT LENGTH-ft (3), (4), (5) TEXAS CONE PENETROMETER N blows/ft			ANCHOR BOLT DESIGN (1)				FOUNDATION DESIGN LOAD (2)		TYPICAL APPLICATION
		VERT BARS	SPIRAL & PITCH	10	15	40	ANCHOR BOLT DIA	Fy (ksi)	BOLT CIR DIA	ANCHOR TYPE	MOMENT K-ft	SHEAR Kips	
48-A	48"	20 #9	#4 at 6"	21.9	19.5	14.7	2 1/2"	55	27"	2	490	10	Mast arm assembly.

SEE SHEET "TS-FD" FOR ADDITIONAL DETAILS.

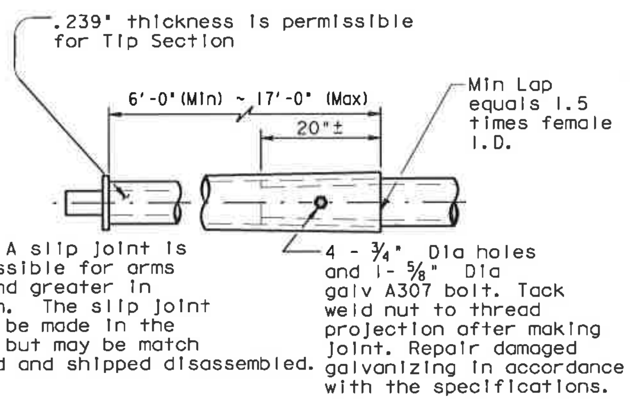

Note: A slip joint is permissible for arms 50' and greater in length. The slip joint shall be made in the shop, but may be match marked and shipped disassembled.

SLIP JOINT DETAIL

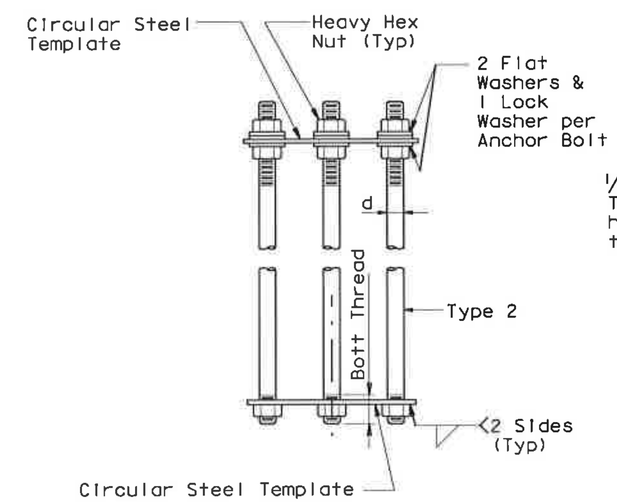

NUT ANCHOR
(TYPE 2)

ANCHOR BOLT ASSEMBLY

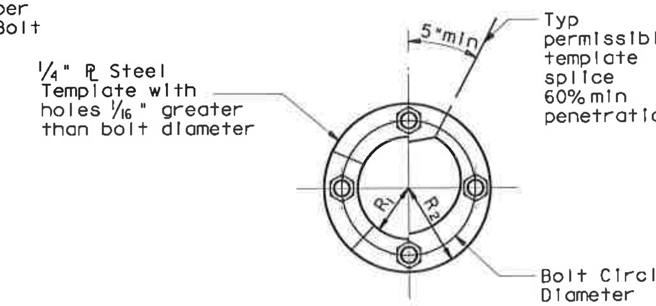

R1 may equal R2 if plate is welded of 3 or more segments.

TEMPLATE DETAIL

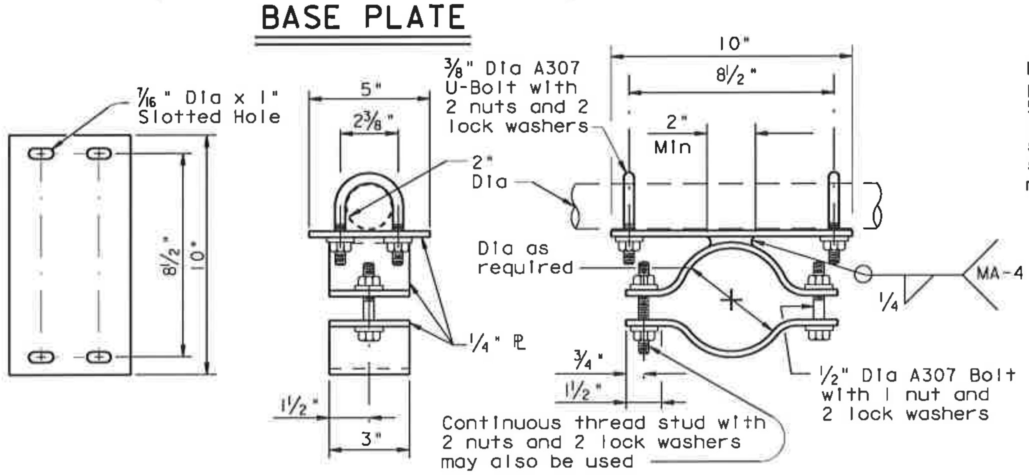

BRACKET ASSEMBLY DETAILS OPTION A

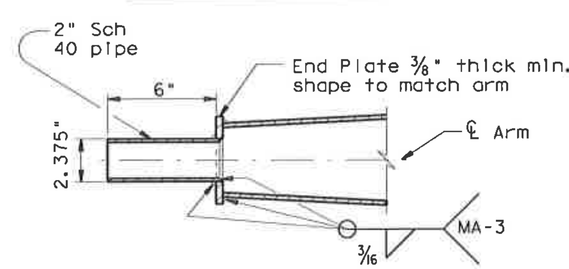

TENON DETAIL

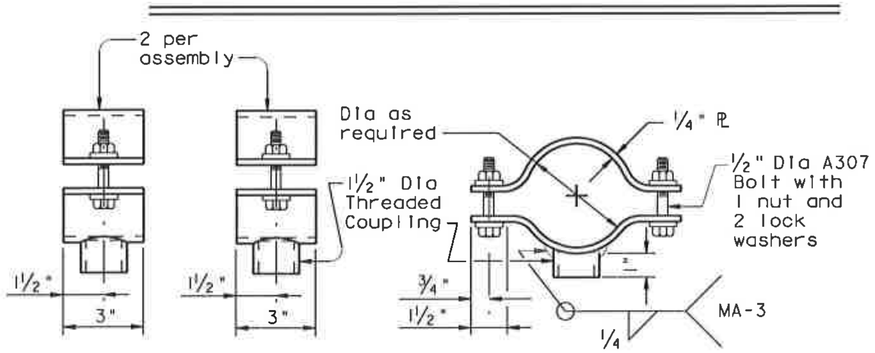

BRACKET ASSEMBLY DETAILS OPTION B

Stainless steel bands and cast bracket as in "Astro-Brac" with 1 1/2" Dia Threaded Coupling.

BRACKET ASSEMBLY OPTION C

STANDARD PLANS
Texas Department of Transportation
Traffic Operations Division

TRAFFIC SIGNAL SUPPORT STRUCTURES
LONG MAST ARM ASSEMBLY (50 TO 65 FT) (80 AND 100 MPH WIND ZONE)

LMA(2)-01
Sheet 2 of 4

© TxDOT July 2000	DN: JSY	CK: ARC	DW: TGG	CK: JSY
REVISIONS 4-20-01	STATE DISTRICT: SAT	FEDERAL REGION: 6	FEDERAL AID PROJECT	SHEET 687
	COUNTY: BEXAR	CONTROL: 2708	SECTION: 01	JOB: 022,ETC / HIGHWAY: FM2696

DISCLAIMER
The use of this standard is governed by the "Texas Engineering Practice Act". No warranty of any kind is made by TxDOT for any purpose whatsoever. TxDOT assumes no responsibility for the conversion of this standard to other formats or for incorrect results or damages resulting from its use.

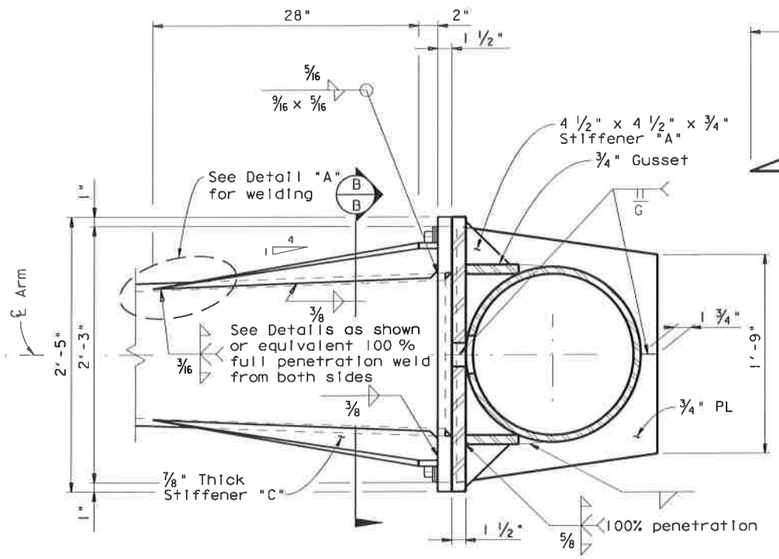

SECTION A-A

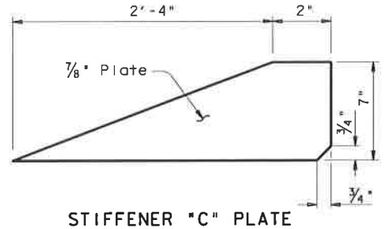

STIFFENER "C" PLATE

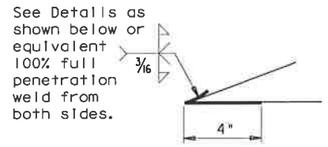

Only 4" length at tip of Stiffener "C" requires full penetration weld. Smooth weld radius to connect Stiffener . Others only require fillet weld.

DETAIL "A"

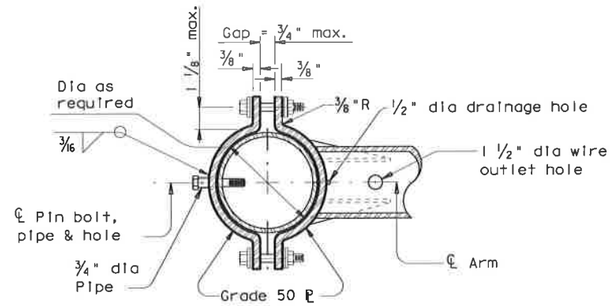

SECTION C-C

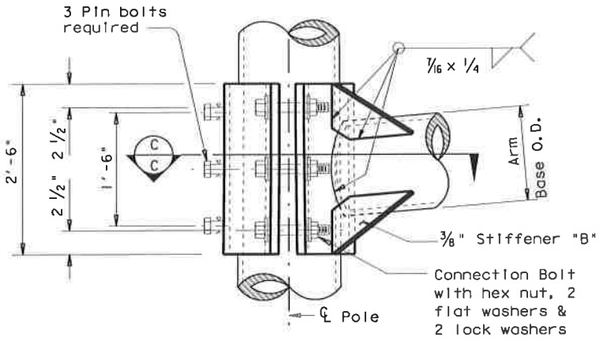

ELEVATION

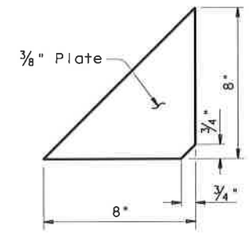

STIFFENER "B" PLATE

MATERIALS	
Round Shafts or Polygonal Shafts	ASTM A595 GR A, ASTM A570 GR 50, ASTM A607 GR 50, ASTM A572 GR 50 or A36M50
Plates (1)	ASTM A36 OR A572 GR 50 or A595(2) or A36M50
Connection Bolts	ASTM A325 except where noted
Pin Bolts	ASTM A325
Pipe	ASTM A53 GR A or B, or A501
Misc. Hardware	Galvanized steel or stainless steel or as noted

(1) Any of the materials listed for plates may be used where the drawings do not specify a particular Grade designation.

(2) If A595 material is used, it need not be cold worked to A595 requirments, but material must have 40 ksi minimum yield prior to fabrication.

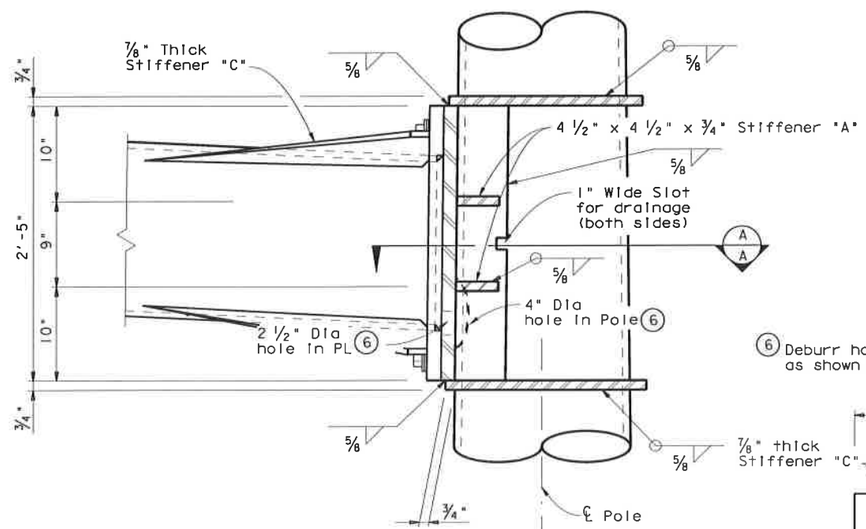

ELEVATION

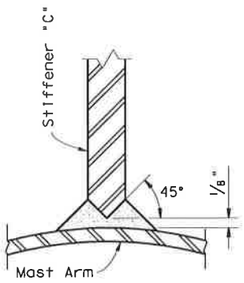

6 Deburr holes and offset as shown for drainage

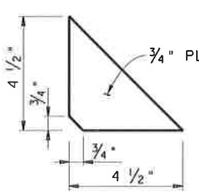

STIFFENER "A" PLATE

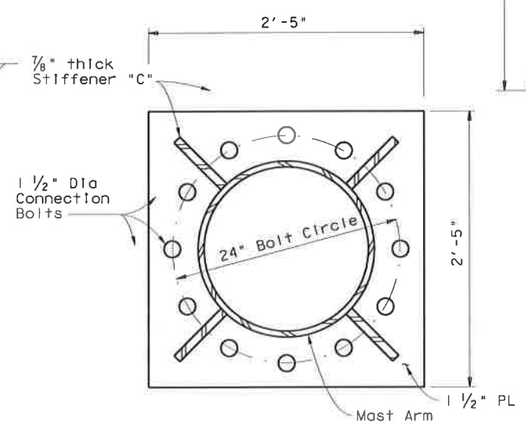

SECTION B-B

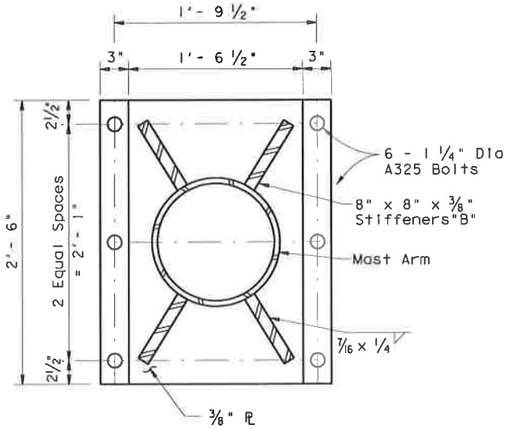

MAST ARM AND ILSN ARM TO POLE

CLAMP-ON DETAIL

GENERAL NOTES:

Clamp-on details are used for the second arm on dual mast arm assemblies. A Maximum 1 1/2" wide vertical slotted hole may be cut in the front clamp plate to facilitate drainage during galvanizing. The slot shall be centered behind the arm and shall be no longer than the arm diameter minus 1".

Fixed mount details are used for single mast arm assemblies and for the first arm on dual mast assemblies.

Where duplicate parts occur on a detail, welds shown for one part shall apply to all similar parts on the detail.

Pin bolts are required to prevent rotation of clamp-on arms under design wind forces.

STANDARD PLANS
Texas Department of Transportation
Traffic Operations Division

TRAFFIC SIGNAL SUPPORT STRUCTURES

LONG MAST ARM ASSEMBLY (50 TO 65 FT) (80 AND 100 MPH WIND ZONE)

LMA(3)-01

Sheet 3 of 4

©TxDOT July 2000	DN: - JSY	CK: - ARC	DW: - TGG	CK: - JSY
REVISIONS 4-20-01	STATE DISTRICT: SAT	FEDERAL REGION: 6	FEDERAL AID PROJECT	SHEET 688
COUNTY: BEXAR	CONTROL: 2708	SECTION: 01	JOB: 022,ETC	HIGHWAY: FM2696

DISPLAYED
1 2 3 4 5 6 7 8 9 10 11 12 13 14 15 16 17 18 19 20 21 22 23 24 25 26 27 28 29 30 31 32 33 34 35 36 37 38 39 40 41 42 43 44 45 46 47 48 49 50 51 52 53 54 55 56 57 58 59 60 61 62 63
ACC:

DISCLAIMER
The use of this standard is governed by the "Texas Engineering Practice Act". No warranty of any kind is made by TxDOT for any purpose whatsoever. TxDOT assumes no responsibility for the conversion of this standard to other formats or for incorrect results or damages resulting from its use.

Shipping Parts List

Ship each pole with the following attached: enlarged hand hole, pole cap, fixed arm connection bolts and washers, and any additional hardware listed in the table.

Nominal Arm Length	30' Poles with Luminaire		24' Poles with ILSN		19' Poles with no Luminaire and no ILSN	
	See note above plus: one (or two if ILSN attached) small hand hole, clamp-on simplex		See note above plus one small hand hole		See note above	
Single Mast Arm						
Lf ft.	Designation	Quantity	Designation	Quantity	Designation	Quantity
50	50L		50S		50	1
55	55L		55S		55	
60	60L		60S		60	2
65	65L		65S		65	

Dual Mast Arm

Lf ft.	Lc ft.	Designation	Quantity	Designation	Quantity	Designation	Quantity
50	20	5020L		5020S		5020	
	24	5024L		5024S		5024	
	28	5028L		5028S		5028	
	32	5032L		5032S		5032	
	36	5036L		5036S		5036	
	40	5040L		5040S		5040	
	44	5044L		5044S		5044	
55	20	5520L		5520S		5520	
	24	5524L		5524S		5524	
	28	5528L		5528S		5528	
	32	5532L		5532S		5532	
	36	5536L		5536S		5536	
	40	5540L		5540S		5540	
	44	5544L		5544S		5544	
60	20	6020L		6020S		6020	
	24	6024L		6024S		6024	
	28	6028L		6028S		6028	
	32	6032L		6032S		6032	
	36	6036L		6036S		6036	
	40	6040L		6040S		6040	
	44	6044L		6044S		6044	
65	20	6520L		6520S		6520	
	24	6524L		6524S		6524	
	28	6528L		6528S		6528	
	32	6532L		6532S		6532	
	36	6536L		6536S		6536	
	40	6540L		6540S		6540	
	44	6544L		6544S		6544	

Shipping Parts List

Traffic Signal Arms (Fixed Mount) (1 per pole)
Ship each arm with listed equipment attached

Nominal Arm Length	Type IV Arm (4 Signals) * 3 Bracket Assembly * and 4 CGB Connectors	
ft.	Designation	Quantity
50	50IV	1
55	55IV	
60	60IV	2
65	65IV	

Luminaire Arms (1 per 30' pole)

Nominal Arm Length	Quantity
8' Arm	

ILSN Arm (Max. 2 per pole) Ship with clamps, bolts and washers

Nominal Arm Length	Quantity
7' Arm	
9' Arm	

Traffic Signal Arms (80 MPH Clamp-On Mount) (1 per pole) Ship each arm with listed equipment attached

Nominal Arm Length	Type I Arm (1 Signal) 2 CGB connector and 1 clamp w/bolts and washers		Type II Arm (2 Signals) * 1 Bracket Assembly * and 3 CGB connectors, and 1 clamp w/bolts and washers		Type III Arm (3 Signals) * 2 Bracket Assembly * and 4 CGB connectors, and 1 clamp w/bolts and washers	
ft.	Designation	Quantity	Designation	Quantity	Designation	Quantity
20	20I-80					
24	24I-80		24II-80			
28	28I-80		28II-80			
32			32II-80		32III-80	
36			36II-80		36III-80	
40					40III-80	
44					44III-80	

Traffic Signal Arms (100 MPH Clamp-On Mount) (1 per pole) Ship each arm with listed equipment attached

Nominal Arm Length	Type I Arm (1 Signal) 2 CGB connector and 1 clamp w/bolts and washers		Type II Arm (2 Signals) * 1 Bracket Assembly * and 3 CGB connectors, and 1 clamp w/bolts and washers		Type III Arm (3 Signals) * 2 Bracket Assembly * and 4 CGB connectors, and 1 clamp w/bolts and washers	
ft.	Designation	Quantity	Designation	Quantity	Designation	Quantity
20	20I-100					
24	24I-100		24II-100			
28	28I-100		28II-100			
32			32II-100		32III-100	
36			36II-100		36III-100	
40					40III-100	
44					44III-100	

Anchor Bolt Assemblies (1 per pole)

Anchor Bolt Diameter	Anchor Bolt Length	Quantity
2 1/2 "	5' - 3"	3

Each anchor bolt assembly consists of the following: Top and bottom templates, 4 anchor bolts, 8 nuts, 8 flat washers, 4 lock washers and 4 nut anchor devices (type 2) per Standard Drawing "TS-FD".
Templates may be removed for shipment.

Foundation Summary Table **

Location Ident.	Avg. N Blow/ft.	No. Each	Drill Shaft *** Length (feet) 48-A
BLANCO AT HUEBNER	10	3	22
Total Drill Shaft Length			66

Notes
- * Supply Option "A" unless otherwise noted
- ** Foundations may be listed separately or grouped according to similarity of location and type. Quantities are for the Contractor's information only.
- *** Decimal lengths in Design Table are to allow interpolation for other penetrometer values. Round to nearest foot for entry into Summary Table.

Abbreviations
- Lf= Fixed Arm Length
- Lc= Clamp-on Arm Length (44' Max.)

STATE OF TEXAS
JOSE A. SANCHEZ
87890
LICENSED PROFESSIONAL ENGINEER

JOSE A. SANCHEZ — DATE 2007.12.07

STANDARD PLANS
Texas Department of Transportation
Traffic Operations Division

LONG MAST ARM ASSEMBLY PARTS LIST

Sheet 4 of 4 — LMA(4)-01(MOD)

©TxDOT November 2000 DN: JK | CK: GRB | DW: FDN | CK: CAL

REVISIONS	STATE DISTRICT	FEDERAL REGION	FEDERAL AID PROJECT	SHEET
4-20-01	SAT	6		689

COUNTY	CONTROL	SECTION	JOB	HIGHWAY
BEXAR	2708	01	022, ETC	FM2696

ACC: DISPLAYED

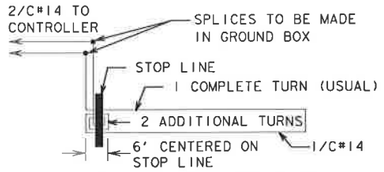

APPROACH WITH LONG LOOP

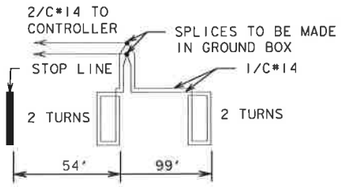

APPROACH WITH 2 LOOPS

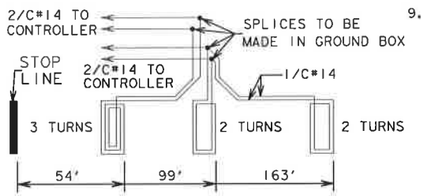

APPROACH WITH 3 LOOPS

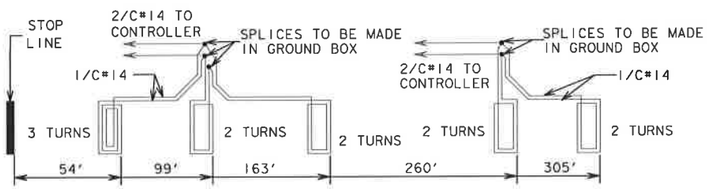

APPROACH WITH 5 LOOPS (FRONTAGE ROAD APPROACH)

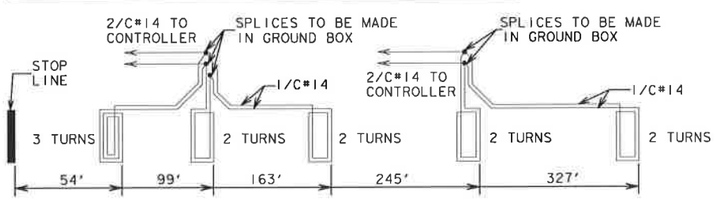

APPROACH WITH 5 LOOPS

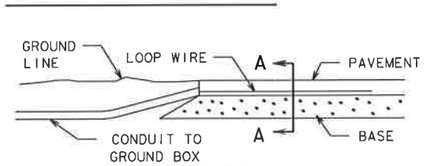

WITHOUT CURBING

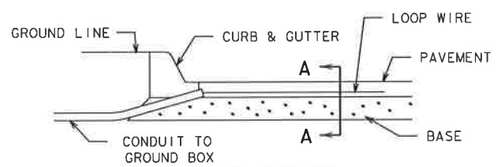

WITH CURBING

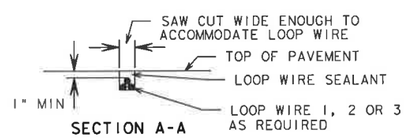

SECTION A-A

TYPICAL LOOP DETECTOR DETAILS

LOOP DETECTOR NOTES :

1. THE PAVEMENT CUT IS TO BE MADE WITH ANY EQUIPMENT THAT WILL PRODUCE A NEAT STRAIGHT LINE OF THE SIZE INDICATED. ALL LOOSE MATERIAL SHALL BE REMOVED. THE CUT SHALL BE CLEAN AND DRY WHEN THE WIRE AND THE SEALANT IS PLACED
2. WHERE MORE THAN ONE LOOP IS PLACED ON AN INTERSECTION APPROACH, THE WIRE FROM LOOP TO GROUND BOX SHALL NOT BE PLACED IN A SAW CUT WITH WIRE FROM OTHER LOOPS UNLESS OTHERWISE SHOWN IN THE PLANS
3. THE LOOP WIRE SHALL BE TWISTED A MINIMUM OF FIVE TURNS PER FOOT FROM THE EDGE OF THE ROAD TO THE GROUND BOX AND NO SPLICES SHALL BE PERMITTED IN THE LOOP OR IN THE RUN TO THE PULL BOX
4. THE 1/C#14 LOOP WIRE SHALL BE SINGLE CONDUCTOR CROSSLINKED POLYETHYLENE (0.045) INSULATED WIRE, TYPE: USE, RHH, RHW, 14 AWG STRANDED COPPER RATED AT 600 VOLTS
5. THE 2/C#14 LOOP CABLE SHALL BE TWO CONDUCTOR SHIELDED CABLE, 14 AWG, 19 X 27 STRANDED , 600 VOLT TINNED COPPER, POLYETHYLENE INSULATED, TWISTED PAIR, TWISTED A MINIMUM OF FIVE TWISTS PER FOOT, ALUMINUM-POLYESTER SHIELD, 16 AWG STRANDED TINNED COPPER DRAIN WIRE, CHROME VINYL JACKET, 100 % SHIELD COVERAGE THE LOOP CABLE SHALL BE CONTINUOUS WITHOUT SPLICES
6. THE LOOP WIRE SHALL BE SPLICED TO THE LOOP CABLE BY SOLDERING CONDUCTORS, SECURING WITH A WIRE NUT AND FULLY ENCAPSULATING INTO A WATER TIGHT COMMERCIAL SPLICING KIT
7. ALL LOOP WIRE PLACED IN A SAW CUT SHALL BE SEALED BY FULLY ENCAPSULATING IT WITH LOOP WIRE SEALANT
8. ALL LOOP WIRE AND LOOP CABLE SHALL BE TESTED. WIRE AND CABLE TESTING LESS THAN 50 MEGAOHMS INSULATION RESISTANCE AT 500 VOLTS SHALL BE REPLACED BY THE CONTRACTOR AT HIS EXPENSE. THIS TEST SHOULD BE MADE BEFORE, DURING AND AFTER EACH COMPLETE LOOP DETECTOR INSTALLATION
9. UPON COMPLETION OF THE COMPLETE LOOP DETECTOR SYSTEM, THE FINAL TEST WILL BE MADE AT ITS TERMINATION AT THE CONTROLLER BY THE ENGINEER. ANY LOOP DETECTOR NOT MEETING THE REQUIREMENTS OF NOTE 8 SHALL BE REPLACED BY THE CONTRACTOR AT HIS EXPENSE. THE FINAL TEST SHALL BE MADE PRIOR TO THE FINAL MAT OF A. C. P.

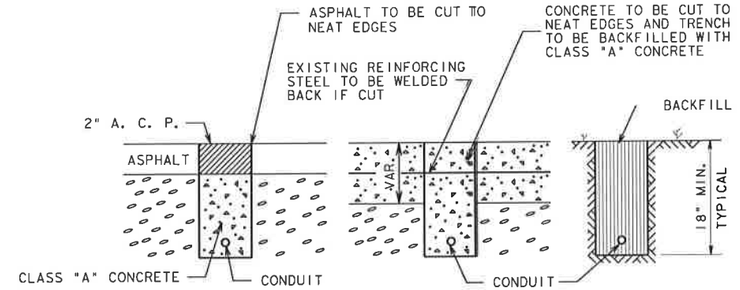

ASPHALT PAVEMENT | CONCRETE PAVEMENT | NATURAL GROUND

TRENCH DETAILS

CONCRETE TO BE TESTED AS MISCELLANEOUS CONCRETE
WIDTH OF TRENCH SHALL BE WIDE ENOUGH TO ACCOMODATE CONDUIT

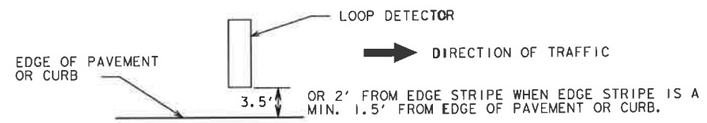

LOOP DETECTOR PLACEMENT

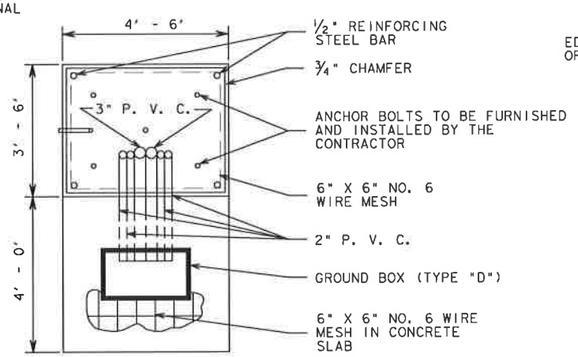

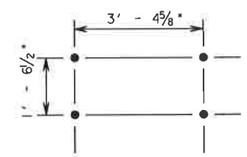

ANCHOR BOLT PATTERN

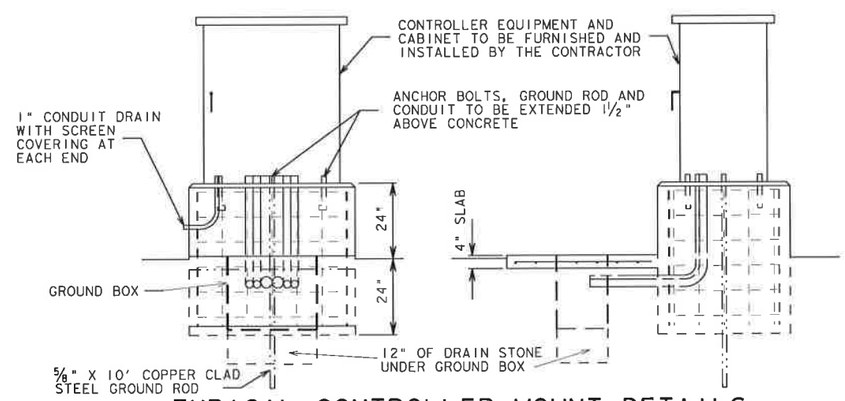

TYPICAL CONTROLLER MOUNT DETAILS

CONTROLLER MOUNT NOTES :

ALL WIRING TERMINATING IN THE CONTROLLER SHALL BE LABELLED IN A MANNER THAT CAN BE IDENTIFIED BY THE ENGINEER WHEN THE CONTROLLER IS INSTALLED

ONE 2" PVC SHALL REMAIN EMPTY FOR FUTURE USE

CLASS "A" CONCRETE SHALL BE USED FOR CONTROLLER FOUNDATION AND SLAB

CONCRETE SHALL BE TESTED AS MISCELLANEOUS CONCRETE

ALL MATERIALS AND LABOR TO INSTALL THE CONTROLLER FOUNDATION SHALL BE CONSIDERED SUBSIDIARY TO BID ITEM 656

CONTROLLER FOUNDATION MAY BE ALTERED TO ACCOMODATE FIELD CONDITIONS AS DIRECTED BY THE ENGINEER.

LOOP DETECTOR CONTROLLER FOUNDATION AND CONDUIT TRENCH DETAILS

SAN ANTONIO DISTRICT STANDARD

© 2000 Texas Department of Transportation

REV. AUG. 1999
OCTOBER, 1995

FED. RD. DIV. NO.	FEDERAL AID PROJECT NO.		SHEET NO.
6			690
STATE	DIST.	COUNTY	
TEXAS	SAT	BEXAR	
CONT.	SECT.	JOB	HIGHWAY NO.
2708	01	022, ETC	FM2696

LEVELS OF DETAIL
1 2 3 4 5 6 7 8 9
1 7 8 9 10 11 12 13 14 15 16 17 18 19 20 21 22 23 24 25 26 27 28 29 30 31 32
33 34 35 36 37 38 39 40 41 42 43 44 45 46 47 48
49 50 51 52 53 54 55 56 57 58 59 60 61 62 63
ACC:
FILE: DGN:

DI AN

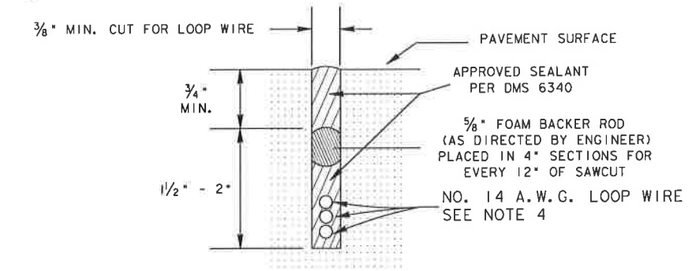

LOOP SAW CUT CROSS-SECTION

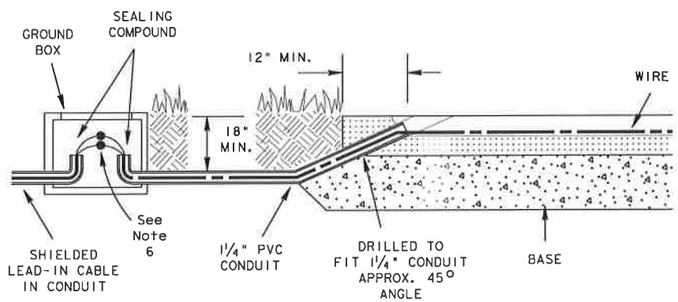

TYPICAL LEAD IN CONFIGURATION (WITHOUT CURBING)

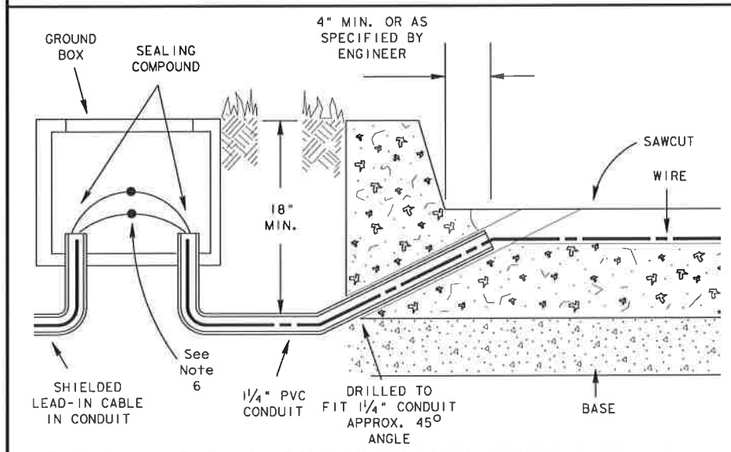

TYPICAL LEAD IN CONFIGURATION (WITH CURBING)

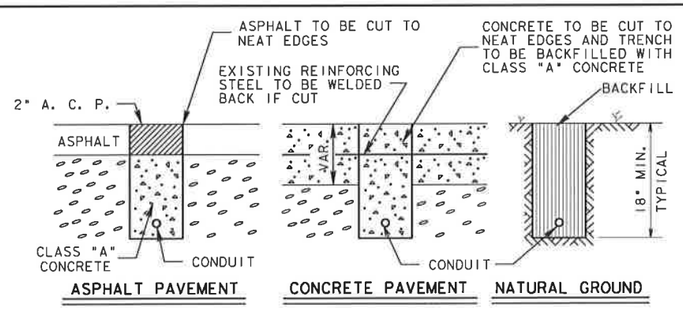

TRENCH DETAILS

CONCRETE TO BE TESTED AS MISCELLANEOUS CONCRETE
WIDTH OF TRENCH SHALL BE WIDE ENOUGH TO ACCOMMODATE CONDUIT

TYPICAL LOOP DETECTOR LAYOUTS

(AS SPECIFIED IN PLANS)

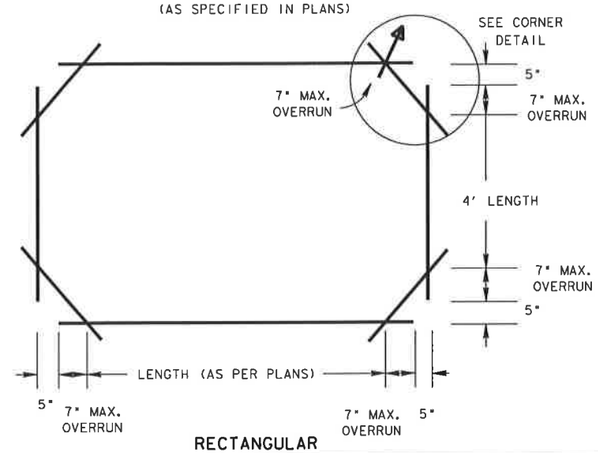

RECTANGULAR

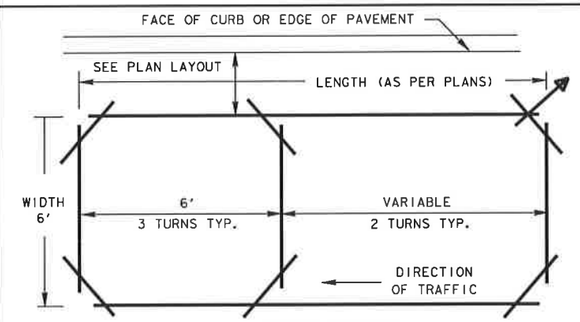

POWER HEADER

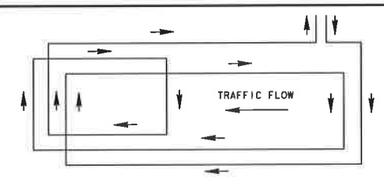

LOOP WINDING DETAILS

TYPICAL CORNER DETAILS

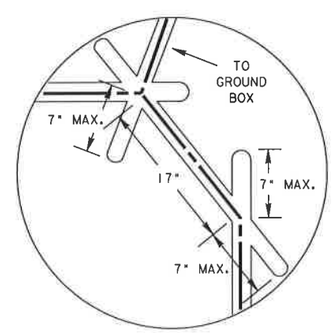

SAWCUT CORNER DETAIL

7" OVERRUN BASED ON 24" DIAMETER SAW BLADE

LOOP DETECTOR NOTES

1. THE PAVEMENT CUT IS TO BE MADE WITH ANY EQUIPMENT THAT WILL PRODUCE A NEAT STRAIGHT LINE OF THE SIZE INDICATED. ALL LOOSE MATERIAL SHALL BE REMOVED. THE CUT SHALL BE CLEAN AND DRY WHEN THE WIRE AND THE SEALANT IS PLACED
2. WHERE MORE THAN ONE LOOP IS PLACED ON AN INTERSECTION APPROACH, THE WIRE FROM LOOP TO GROUND BOX SHALL NOT BE PLACED IN A SAW CUT WITH WIRE FROM OTHER LOOPS UNLESS OTHERWISE SHOWN IN THE PLANS
3. THE LOOP WIRE SHALL BE TWISTED A MINIMUM OF FIVE TURNS PER FOOT FROM THE EDGE OF THE ROAD TO THE GROUND BOX AND NO SPLICES SHALL BE PERMITTED IN THE LOOP OR IN THE RUN TO THE PULL BOX
4. THE 1/C#14 LOOP WIRE SHALL BE SINGLE CONDUCTOR CROSSLINKED POLYETHYLENE (0.045) INSULATED WIRE, TYPE: USE, RHH, RHW, 14 AWG STRANDED COPPER RATED AT 600 VOLTS
5. THE 2/C#14 LOOP CABLE SHALL BE TWO CONDUCTOR SHIELDED CABLE, 14 AWG, 19 X 27 STRANDED , 600 VOLT TINNED COPPER, POLYETHYLENE INSULATED, TWISTED PAIR, TWISTED A MINIMUM OF FIVE TWISTS PER FOOT, ALUMINUM-POLYESTER SHIELD, 16 AWG STRANDED TINNED COPPER DRAIN WIRE, CHROME VINYL JACKET, 100 % SHIELD COVERAGE THE LOOP CABLE SHALL BE CONTINUOUS WITHOUT SPLICES
6. THE LOOP WIRE SHALL BE SPLICED TO THE LOOP CABLE BY SOLDERING CONDUCTORS, SECURING WITH A WIRE NUT AND FULLY ENCAPSULATING INTO A WATER TIGHT COMMERCIAL SPLICING KIT
7. ALL LOOP WIRE PLACED IN A SAW CUT SHALL BE SEALED BY FULLY ENCAPSULATING IT WITH LOOP WIRE SEALANT
8. ALL LOOP WIRE AND LOOP CABLE SHALL BE TESTED. WIRE AND CABLE TESTING LESS THAN 50 MEGAOHMS INSULATION RESISTANCE AT 500 VOLTS SHALL BE REPLACED BY THE CONTRACTOR AT HIS EXPENSE. THIS TEST SHOULD BE MADE BEFORE, DURING AND AFTER EACH COMPLETE LOOP DETECTOR INSTALLATION
9. UPON COMPLETION OF THE COMPLETE LOOP DETECTOR SYSTEM, THE FINAL TEST WILL BE MADE AT ITS TERMINATION AT THE CONTROLLER BY THE ENGINEER. ANY LOOP DETECTOR NOT MEETING THE REQUIREMENTS OF NOTE 8 SHALL BE REPLACED. THE FINAL TEST SHALL BE MADE PRIOR TO THE FINAL MAT OF A.C.P.
10. THE LOOP LOCATION, CONFIGURATION AND THE NUMBER OF TURNS SHALL BE AS SHOWN ON THE PLANS OR AS DIRECTED BY THE ENGINEER.

RECOMMENDED NUMBER OF TURNS FOR LOOP DETECTORS

LOOP PERIMETER SIZE (FT.)	NUMBER OF TURNS	APPROXIMATE LOOP SIZES INCLUDED
24' or Less	3 or 4	5' x 5', 6' x 6'
25' - 110'	2 or 3	6' x 10', 6' x 45'
110' or More	1 or 2	6' x 50' or Longer

TYPICAL VIVDS DETAILS

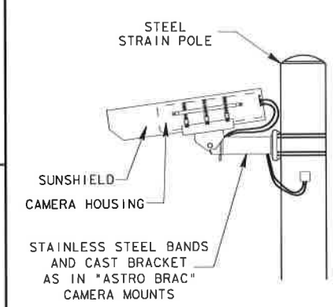

POLE MOUNT

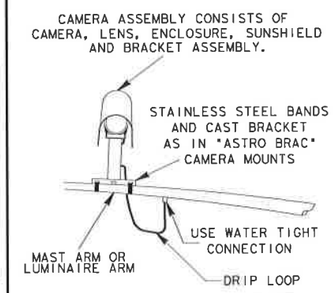

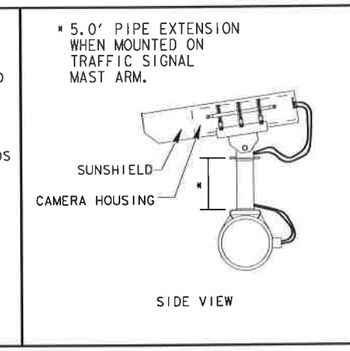

MAST ARM OR LUMINAIRE ARM

VIDEO DETECTION NOTES

1. VIDEO DETECTION PROCESSOR UNIT SHALL BE INSTALLED INSIDE CONTROLLER CABINET.
2. VIDEO DETECTION CAMERA & BRACKET SHALL BE INSTALLED AS DETAILED OR AS DIRECTED BY THE ENGINEER.
3. CAMERAS SHALL BE MOUNTED AS FAR OVER THE ROADWAY AS POSSIBLE.
4. STAINLESS STEEL BANDS AND CAST BRACKETS AS IN "ASTRO-BRAC" SHALL BE USED TO INSTALL THE CAMERAS.
5. WHEN AIMING CAMERA, HORIZON SHALL NOT BE VISIBLE IN THE FIELD OF VIEW.
6. CAMERA ENCLOSURE ASSEMBLY SHALL BE ROTATABLE AFTER INSTALLATION TO PROVIDE PROPER ALIGNMENT.
7. ALL CABLE ENTRY AND EXIT POINTS IN THE MAST ARM AND/OR POLES SHALL BE WATER TIGHT.

FEB. 2006

San Antonio District Standard

VEHICLE DETECTOR INSTALLATION DETAILS

© 2006 Texas Department of Transportation

FED. RD. DIV. NO.	FEDERAL AID PROJECT NO.		SHEET NO.
6			641
STATE	DIST.	COUNTY	
TEXAS	SAT	BEXAR	
CONT.	SECT.	JOB	HIGHWAY NO.
2708	01	022, ETC	FM2696

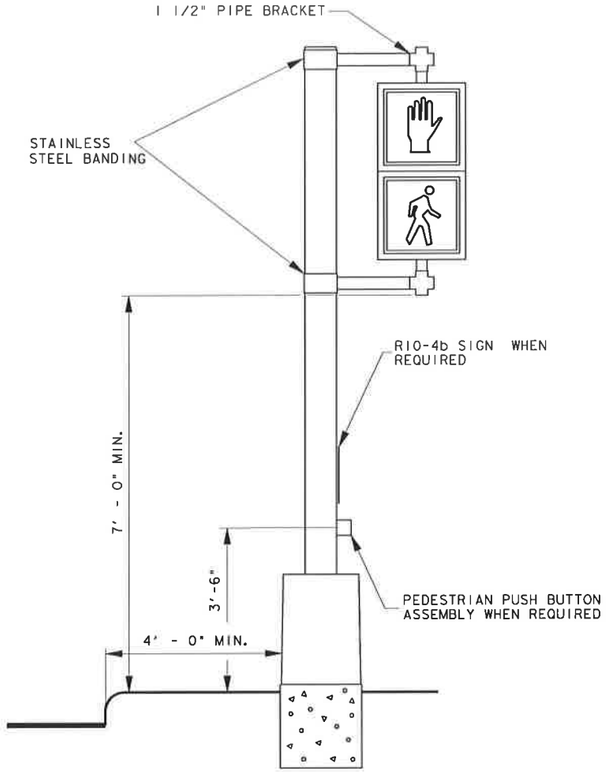

PEDESTAL SIGNAL POLE ASSEMBLY

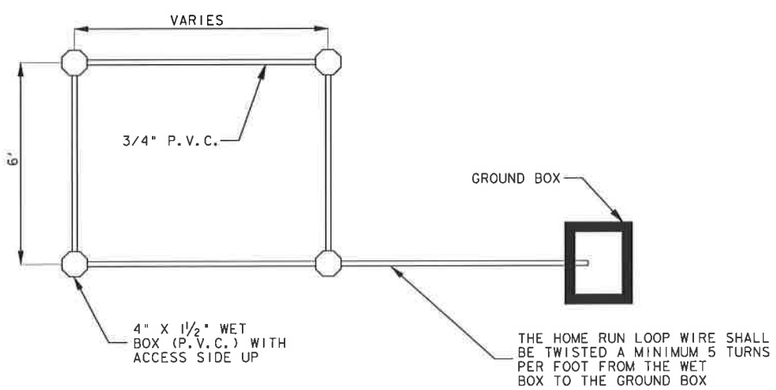

NOTES:

THE CONTRACTOR SHALL INSTALL CONDUIT ENCASED LOOPS AT THE LOCATIONS SHOWN ON THE PLANS USING 3/4 " DIAMETER PVC SCHEDULE 40 OR AT NO ADDITIONAL COST 1" DIAMETER PVC SCHEDULE 80.

LOOP LOCATIONS MAY BE STAGGERED SLIGHTLY (6") TO ACCOMODATE HOME RUN PLACEMENT.

INDIVIDUAL HOME RUN CONDUITS SHALL BE EXTENED TO THE GROUND BOX SHOWN ON THE PLANS FOR EACH LOOP INSTALLED.

THE NUMBER OF LOOP WIRE TURNS SHALL BE AS DETAILED IN THE TYPICAL LOOP DETECTOR DETAILS.

CONDUIT ENCASED LOOPS

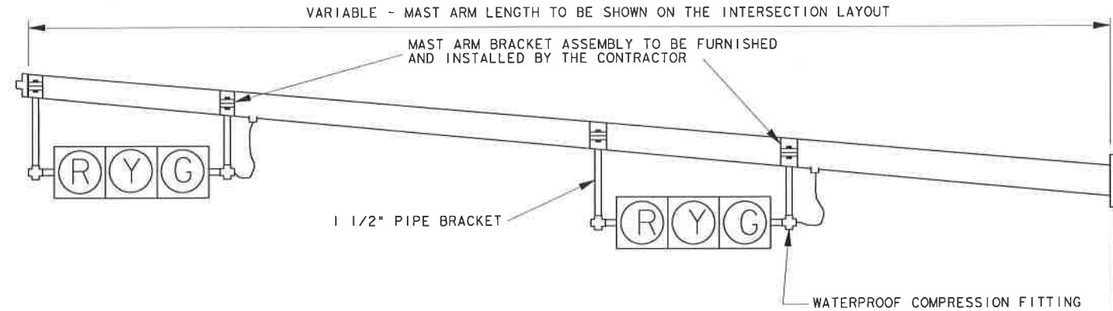

NOTES :

1. SIGNAL POLES AND MAST ARMS WILL BE FURNISHED AND INSTALLED BY THE CONTRACTOR .
2. THE POLES WILL BE FURNISHED WITH A HANDHOLE AND COVER . THE CONTRACTOR SHALL FURNISH AND INSTALL ALL TERMINAL BLOCKS INSIDE THE HANDHOLES. THE TERMINAL BLOCKS AND MOUNTING PROCEDURES SHALL BE AS APPROVED BY THE ENGINEER .
3. AT THE LOCATION SHOWN, PEDESTRIAN SIGNAL HEADS SHALL BE INSTALLED ON PEDESTAL POLES FURNISHED BY THE CONTRACTOR .
4. SIGNAL HEADS SHALL BE MOUNTED IN A LEVEL POSITION AND SHALL BE MOUNTED AT A MINIMUM HEIGHT OF 17'-0" FROM THE ROADWAY OR AS DIRECTED BY THE ENGINEER.

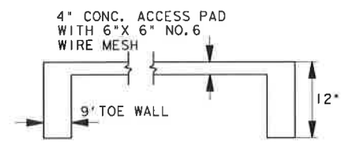

CONCRETE ACCESS PAD DETAILS

THE FLEX BASE CUSHION UNDER ALL SIDEWALKS, WHEELCHAIR RAMPS, ACCESS PADS AND DIRECTIONAL ISLANDS MAY BE OF ANY TYPE AND GRADE APPROVED BY THE ENGINEER.

THE FLEX BASE WILL BE SPRINKLED AND ROLLED/TAMPED AS APPROVED BY THE ENGINEER.

FURNISHING AND PLACING THE BASE CUSHION WILL BE SUBSIDIARY TO THE VARIOUS BID ITEMS IN THIS CONTRACT.

CLASS "B" CONCRETE SHALL BE PLACED AS SHOWN IN THE DETAILS AND AS APPROVED BY THE ENGINEER.

CURB, IF REQUIRED, SHALL BE TYPE II MONO AS SHOWN ON STATE STANDARD SHEET CCCG-95 AND SHALL BE SUBSIDIARY TO THE VARIOUS BID ITEMS IN THIS CONTRACT.

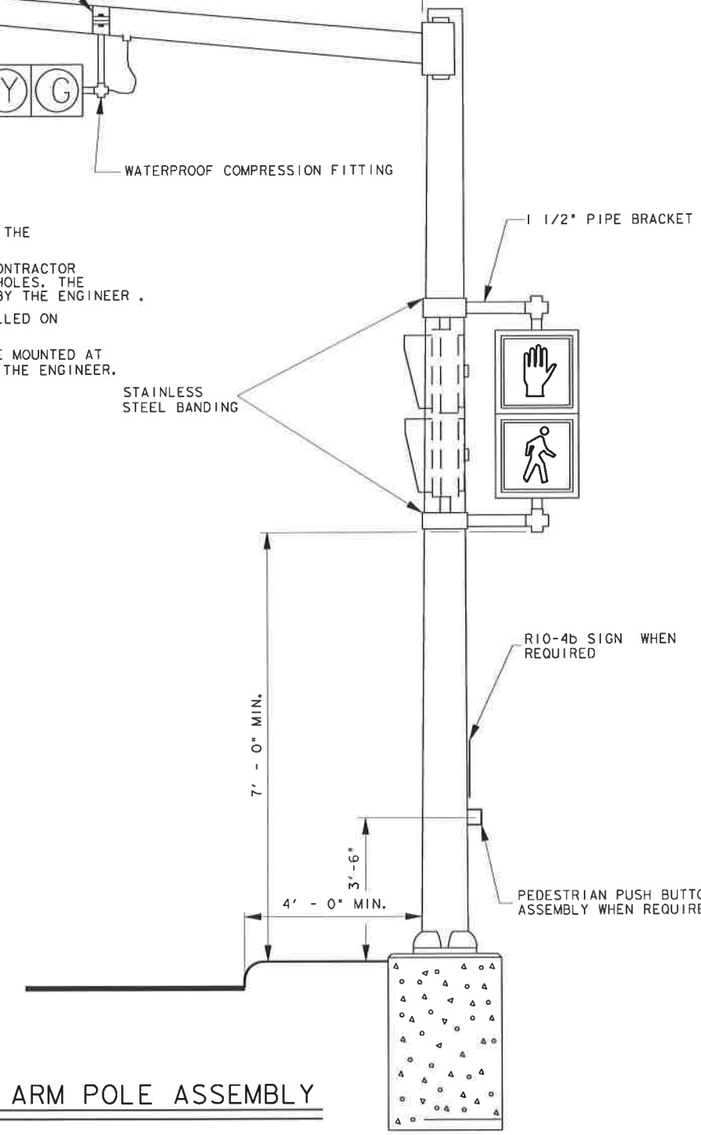

MAST ARM POLE ASSEMBLY

MAST ARM POLE ELEVATION DETAILS

SAN ANTONIO DISTRICT STANDARD

© 2000 Texas Department of Transportation

FED. RD. DIV. NO.	FEDERAL AID PROJECT NO.		SHEET NO.
6			692
STATE	DIST.	COUNTY	
TEXAS	SAT	BEXAR	
CONT.	SECT.	JOB	HIGHWAY NO.
2708	01	022, ETC	FM2696

LEVELS DI: 1 1 1

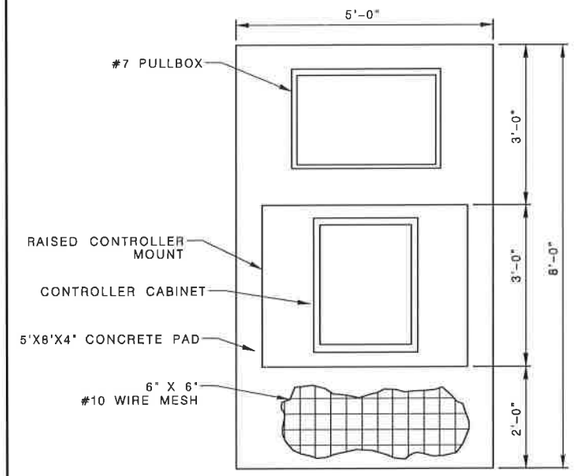

TOP VIEW

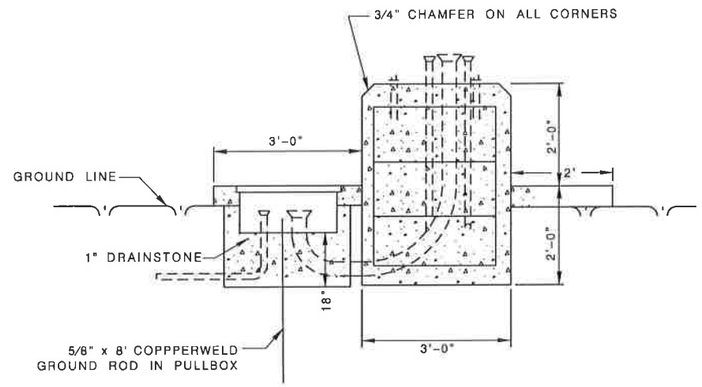

NOTE:

CONTRACTOR TO INSTALL PULLBOX, CONDUIT, CONTROLLER FOUNDATION, CONCRETE SLAB AND CONDUIT FROM PULLBOX TO CABINET

SIDE VIEW

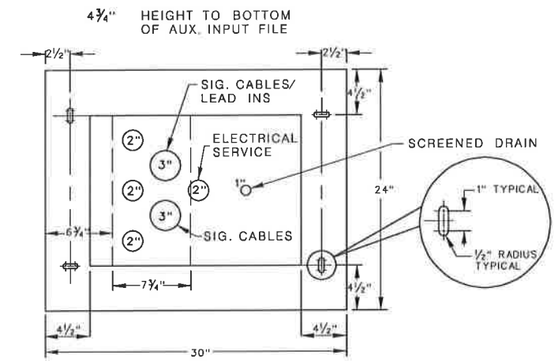

SIGNAL CONTROL CO.
332 BASE PLATE TEMPLATE
FOR ANCHOR BOLTS
PART #332-4300

HANS 081087

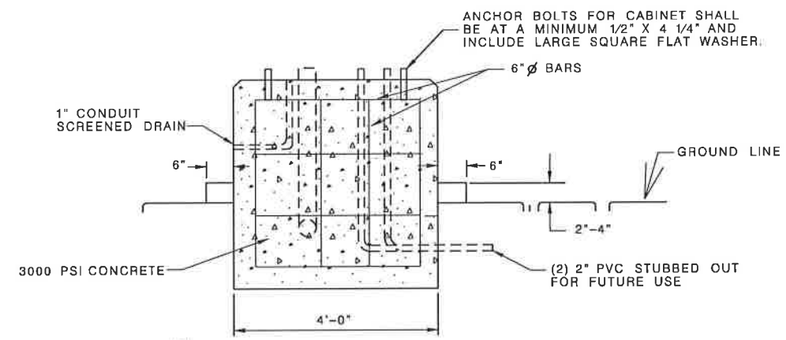

FRONT VIEW

CONTROLLER FOUNDATION (TY332)

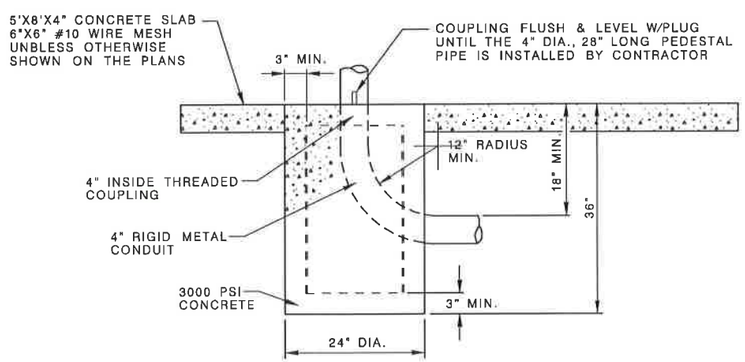

ELEVATION

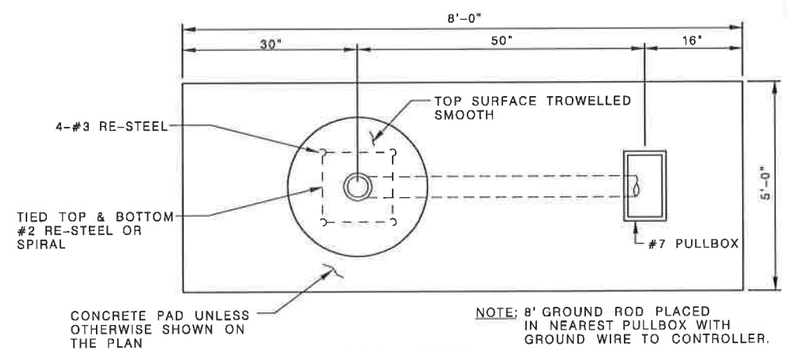

NOTE; 8' GROUND ROD PLACED IN NEAREST PULLBOX WITH GROUND WIRE TO CONTROLLER.

TOP VIEW

4" PIPE PEDESTAL CONTROLLER FOUNDATION (TY336)

CITY OF SAN ANTONIO, TEXAS

DEPARTMENT OF PUBLIC WORKS TRAFFIC DIVISION

TRAFFIC SIGNAL DETAILS

CONDUIT & FOUNDATIONS Sheet 693

SURVY. BY: 2003	APPR. BY: E. BANDA FEB 2003	SCALE: N.T.S.
DRWN. BY: O. TREVINO FEB 2003	TRAFFIC SIGNAL DESIGN ENGINEER	REF. NO.:
DSGN. BY: J.D. FRIEBELE FEB 2003	APPR. BY: J. FRIEBELE FEB 2003	PROJ NO.:
CHKD. BY: E. BANDA FEB 2003	ENGINEERING & TRAFFIC ENGINEER	SHEET NO.: 1 OF 1

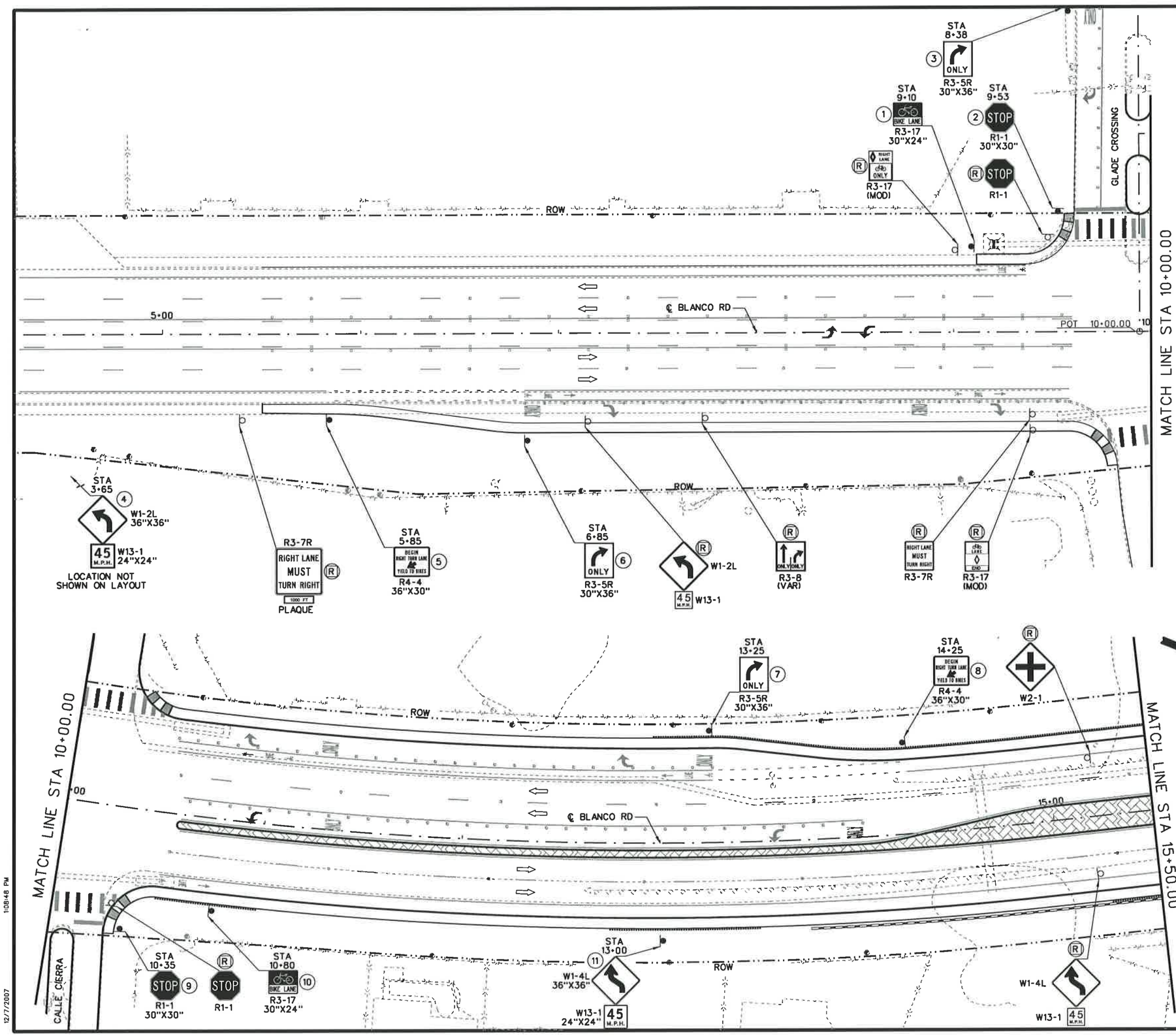

25 12.5 0 25 50
HORIZ. SCALE FEET

LEGEND

- PROPOSED SIGN
- EXISTING SIGN TO BE REMOVED
- EXISTING SIGN TO REMAIN
- EXISTING SIGN TO RELOCATED
- DIRECTION OF TRAFFIC FLOW

STATE OF TEXAS
JOSE A. SANCHEZ
87890
LICENSED
PROFESSIONAL ENGINEER

2007.12.07

JOSE A. SANCHEZ DATE

NO.	REVISION	BY	DATE

CP&Y Chiang, Patel & Yerby, Inc.

TEDSI INFRASTRUCTURE GROUP
Consulting Engineers
10999 IH 10 West • Suite 320
San Antonio, Texas 78230
(210) 858-0610

BEXAR COUNTY
PUBLIC WORKS DIVISION

F.M. 2696 (BLANCO ROAD)

SIGNING LAYOUT

BEGINNING OF PROJECT TO STA 15+50.00

SHEET 1 OF 19

Designed: RC	STATE	BEXAR COUNTY FILE NUMBER	PLAN SET NO. 692
Checked: JAS	TEXAS		OF 842
Drawn: RC	COUNTY		
Checked: JAS	BEXAR		

$FILE$
12/7/2007
1:08:48 PM

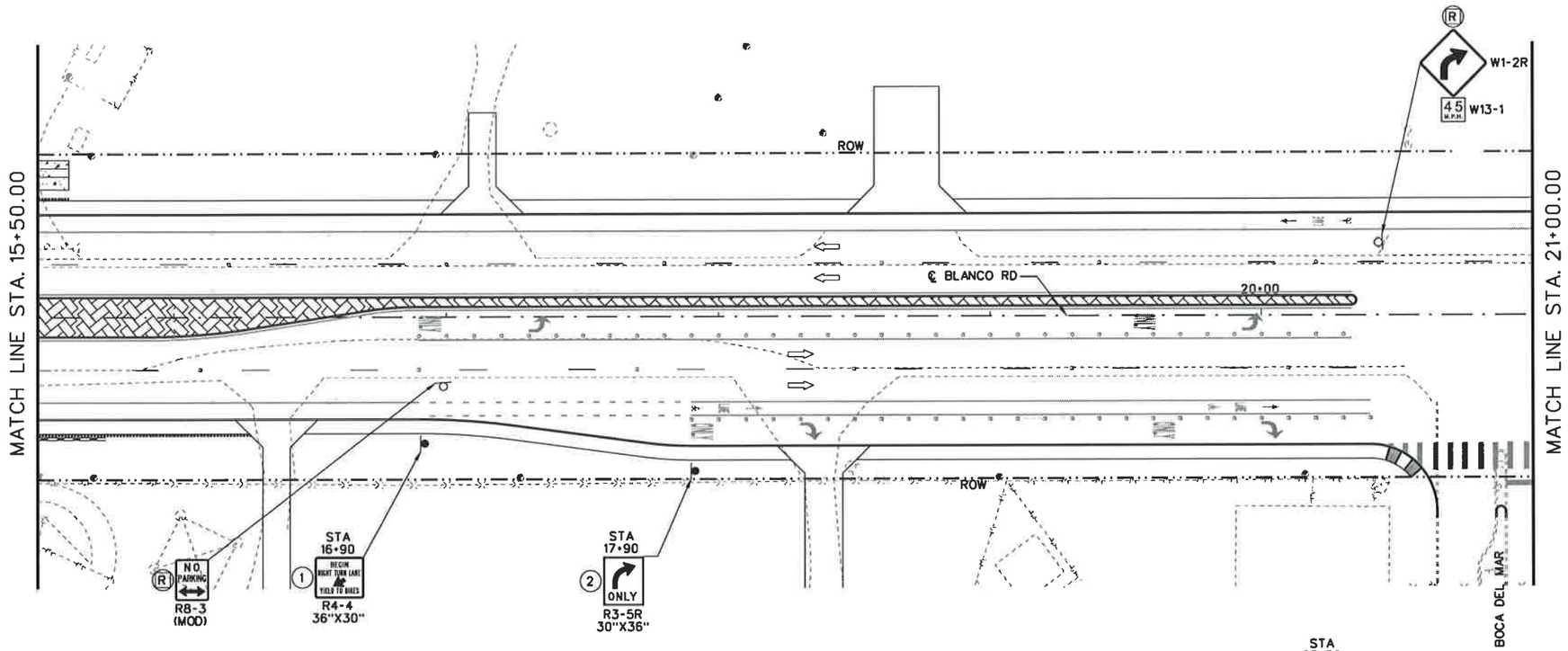

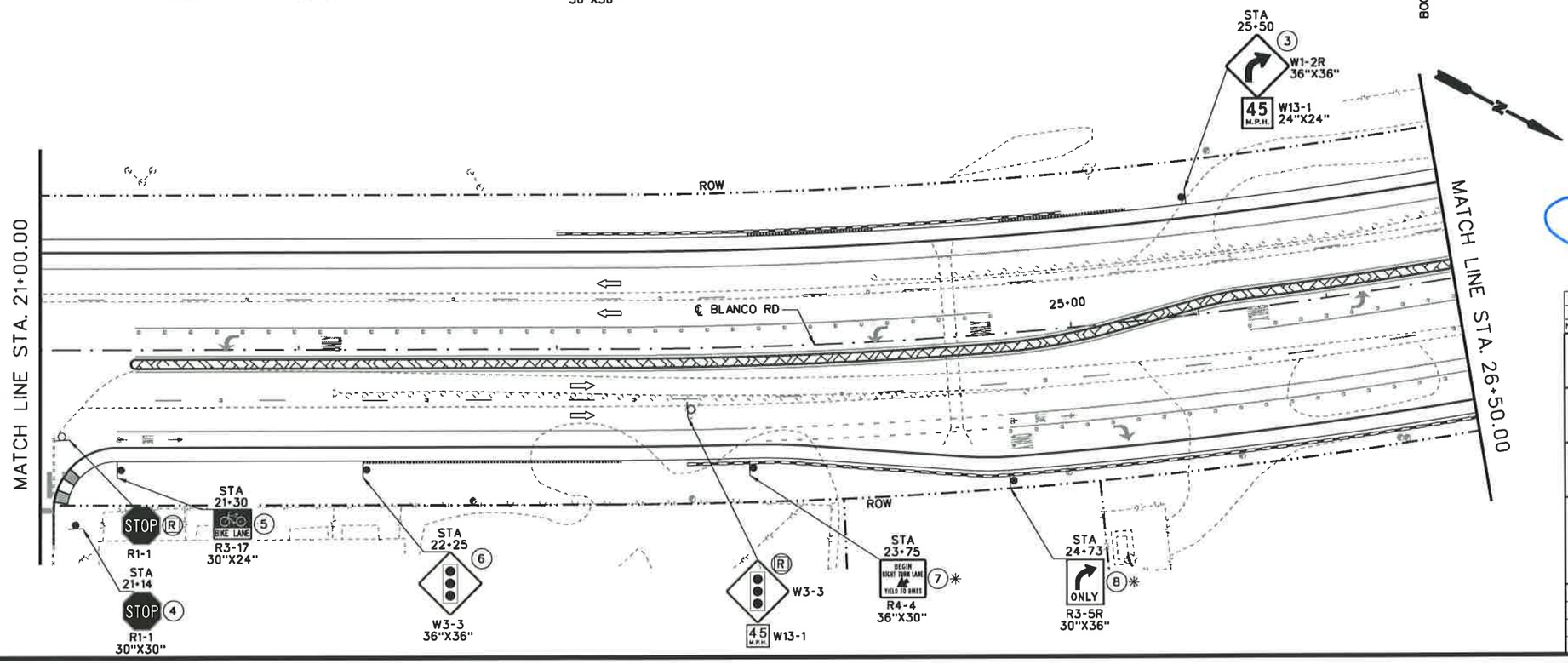

25 12.5 0 25 50
HORIZ. SCALE FEET

LEGEND

- PROPOSED SIGN
- EXISTING SIGN TO BE REMOVED
- EXISTING SIGN TO REMAIN
- EXISTING SIGN TO RELOCATED
- DIRECTION OF TRAFFIC FLOW

* A 6" THICK SIDEWALK IS REQUIRED AT THIS LOCATION FOR THE SB ANCHOR TYPE. PLACE BASE AS CLOSE AS POSSIBLE TO RAIL/COP AS ALLOWED BY STANDARD SHEET SMD (SLIP-1)-02.

STATE OF TEXAS
JOSE A. SANCHEZ
87890
LICENSED
PROFESSIONAL ENGINEER

2007.12.07

JOSE A. SANCHEZ DATE

NO.	REVISION	BY	DATE

CP&Y Chiang, Patel & Yerby, Inc.

TEDSI INFRASTRUCTURE GROUP
Consulting Engineers
10999 IH 10 West • Suite 320
San Antonio, Texas 78230
(210) 858-0610

BEXAR COUNTY
PUBLIC WORKS DIVISION

F.M. 2696 (BLANCO ROAD)

SIGNING LAYOUT

STA 15+50.00 TO STA 26+50.00

SHEET 2 OF 19

Designed: RC	STATE	BEXAR COUNTY FILE NUMBER	PLAN SET NO.
Checked: JAS	TEXAS		695
Drawn: RC	COUNTY		OF
Checked: JAS	BEXAR		842

p:\2007\27958-1-blanco rd south\design\cs\traffic\signing\5102SSRDSK02.DGN
12:57:17 PM
12/7/2007

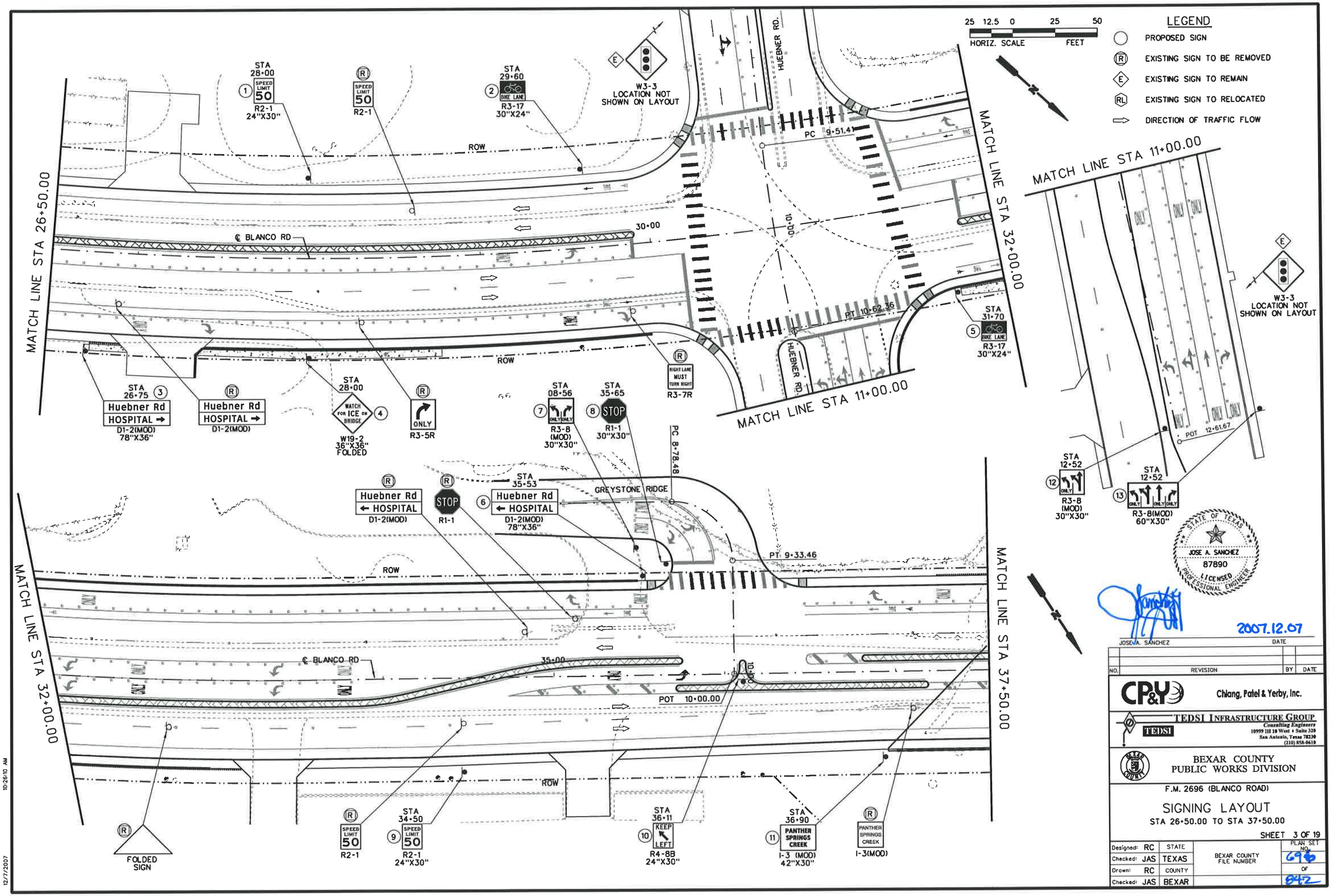

STATE OF TEXAS
JOSE A. SANCHEZ
87890
LICENSED
PROFESSIONAL ENGINEER

2007.12.07

JOSE A. SANCHEZ DATE

NO.	REVISION	BY	DATE

CP&Y Chiang, Patel & Yerby, Inc.

TEDSI INFRASTRUCTURE GROUP
Consulting Engineers
10999 IH 10 West • Suite 320
San Antonio, Texas 78230
(210) 858-0610

BEXAR COUNTY
PUBLIC WORKS DIVISION

F.M. 2696 (BLANCO ROAD)

SIGNING LAYOUT
STA 26+50.00 TO STA 37+50.00

SHEET 3 OF 19

Designed: RC	STATE	BEXAR COUNTY FILE NUMBER	PLAN SET NO. 69
Checked: JAS	TEXAS		OF
Drawn: RC	COUNTY		842
Checked: JAS	BEXAR		

P:\2007\27958-1-Blanco Rd South\Design\CSJ\Traffic\Signing\61025SROSK03.DGN 10:26:10 AM
12/7/2007

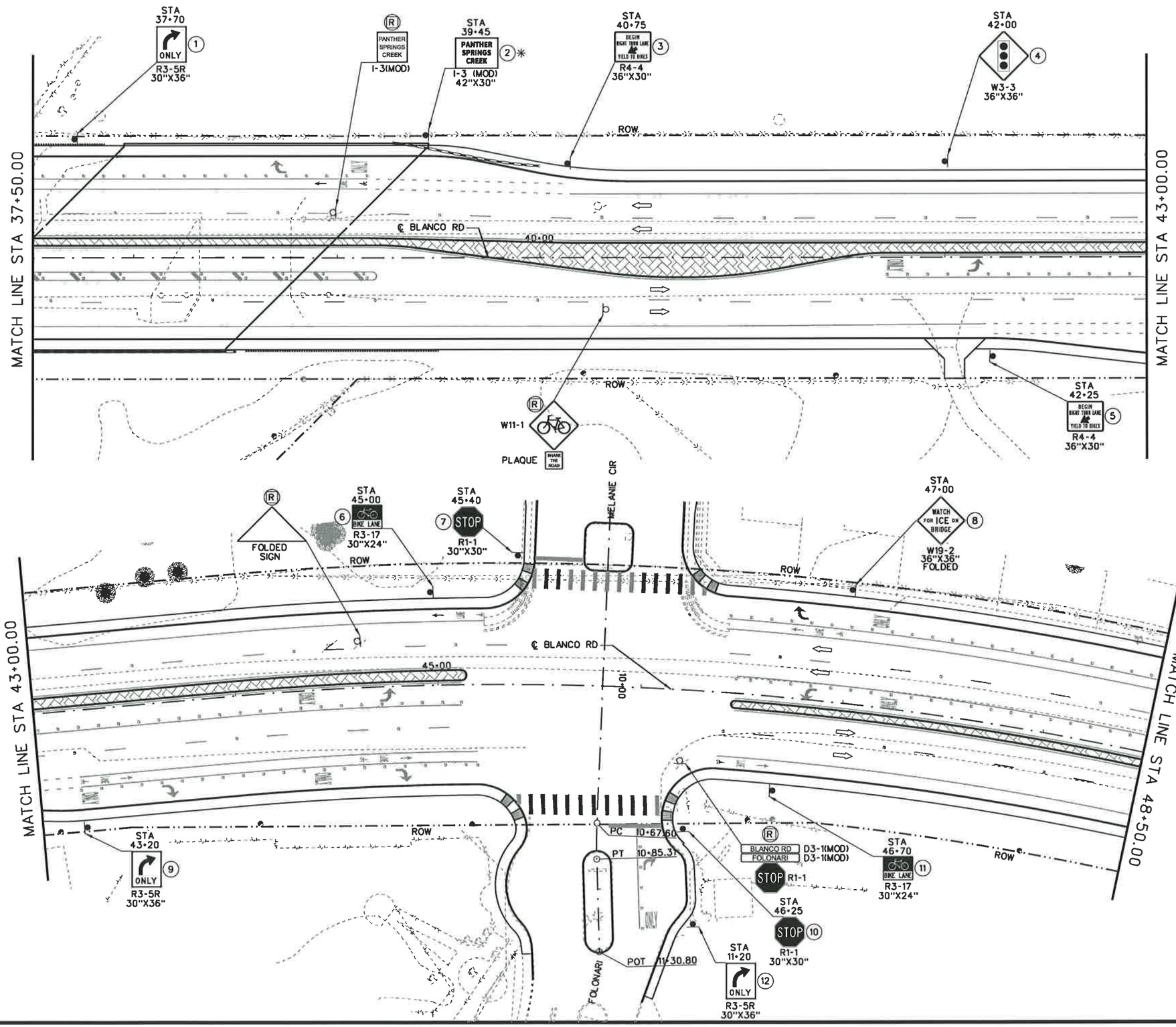

25 12.5 0 25 50
HORIZ. SCALE FEET

LEGEND

- PROPOSED SIGN
- EXISTING SIGN TO BE REMOVED
- EXISTING SIGN TO REMAIN
- EXISTING SIGN TO RELOCATED
- DIRECTION OF TRAFFIC FLOW

✳ A 6" THICK SIDEWALK IS REQUIRED AT THIS LOCATION FOR THE SB ANCHOR TYPE. PLACE BASE AS CLOSE AS POSSIBLE TO RAIL/COP AS ALLOWED BY STANDARD SHEET SMD (SLIP-1)-02.

STATE OF TEXAS
JOSE A. SANCHEZ
87890
LICENSED
PROFESSIONAL ENGINEER

JOSE A. SANCHEZ — DATE 2007.12.07

NO.	REVISION	BY	DATE

CP&Y Chiang, Patel & Yerby, Inc.

TEDSI INFRASTRUCTURE GROUP
Consulting Engineers
10999 IH 10 West ♦ Suite 330
San Antonio, Texas 78230
(210) 858-8610

BEXAR COUNTY
PUBLIC WORKS DIVISION

F.M. 2696 (BLANCO ROAD)

SIGNING LAYOUT

STA 37+50.00 TO STA 48+50.00

SHEET 4 OF 19

Designed: RC	STATE	BEXAR COUNTY FILE NUMBER	PLAN SET NO.
Checked: JAS	TEXAS		678
Drawn: RC	COUNTY		OF
Checked: JAS	BEXAR		842

p:\2007\27958-1-blanco rd south\design\esj\traffic\Signing\6102SSR03K04.DGN
12/7/2007 10:12:21 AM

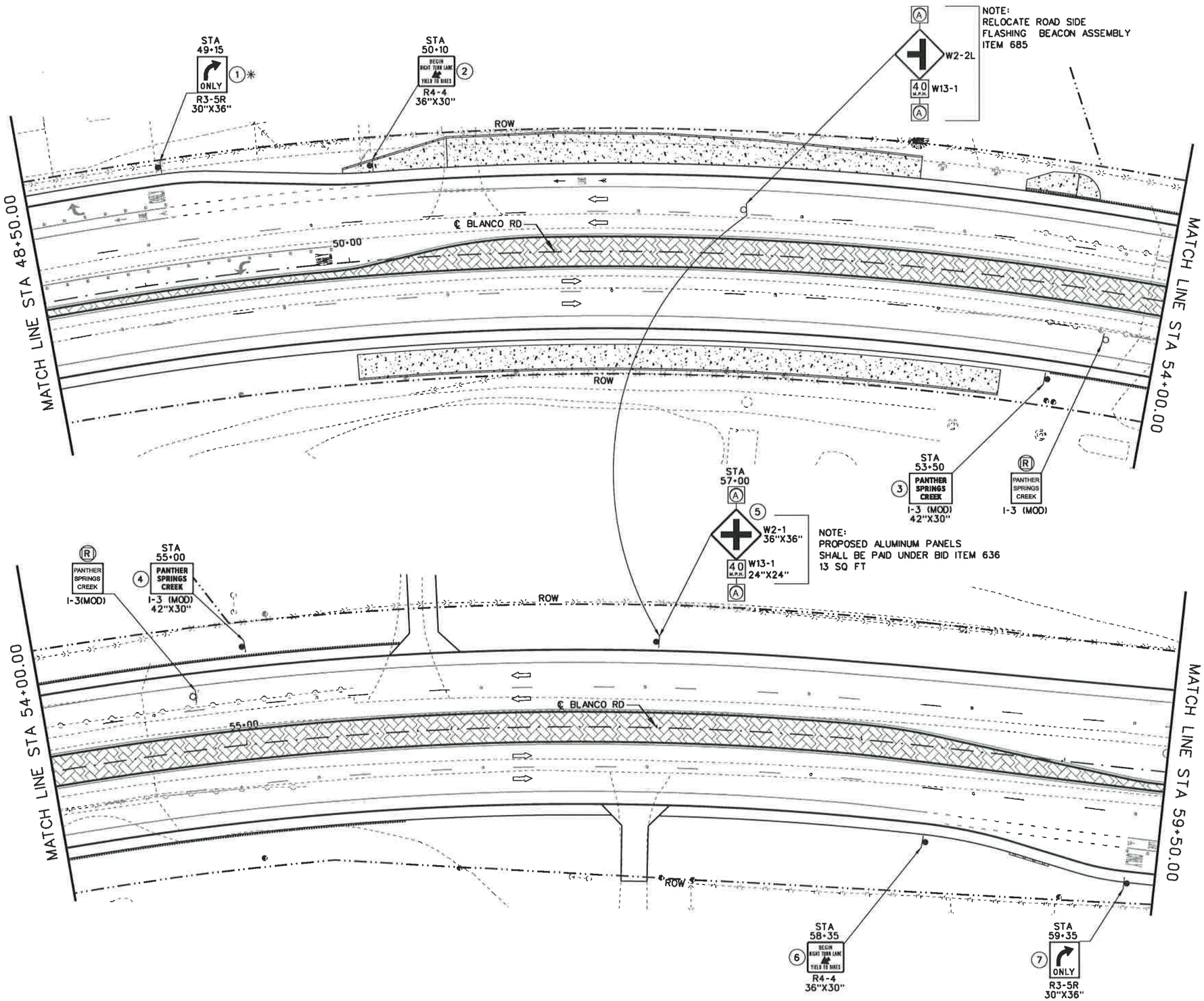

25 12.5 0 25 50
HORIZ. SCALE FEET

LEGEND

- PROPOSED SIGN
- (R) EXISTING SIGN TO BE REMOVED
- (E) EXISTING SIGN TO REMAIN
- (RL) EXISTING SIGN TO RELOCATED
- DIRECTION OF TRAFFIC FLOW

✳ A 6" THICK SIDEWALK IS REQUIRED AT THIS LOCATION FOR THE SB ANCHOR TYPE. PLACE BASE AS CLOSE AS POSSIBLE TO RAIL/COP AS ALLOWED BY STANDARD SHEET SMD (SLIP-1)-02.

STATE OF TEXAS
JOSE A. SANCHEZ
87890
LICENSED
PROFESSIONAL ENGINEER

JOSE A. SANCHEZ — DATE 2007.12.07

NO.	REVISION	BY	DATE

CP&Y Chiang, Patel & Yerby, Inc.

TEDSI INFRASTRUCTURE GROUP
Consulting Engineers
10999 IH 10 West • Suite 320
San Antonio, Texas 78230
(210) 858-8610

BEXAR COUNTY
PUBLIC WORKS DIVISION

F.M. 2696 (BLANCO ROAD)

SIGNING LAYOUT

STA 48+50.00 TO STA 59+50.00

SHEET 5 OF 19

Designed: RC	STATE	BEXAR COUNTY FILE NUMBER	PLAN SET NO.
Checked: JAS	TEXAS		6A8
Drawn: RC	COUNTY		OF
Checked: JAS	BEXAR		84

p:\2007\27958-1-blanco rd south\design\csj\traffic\Signing\6102SSRDSK05.DGN
12/7/2007 10:12:25 AM

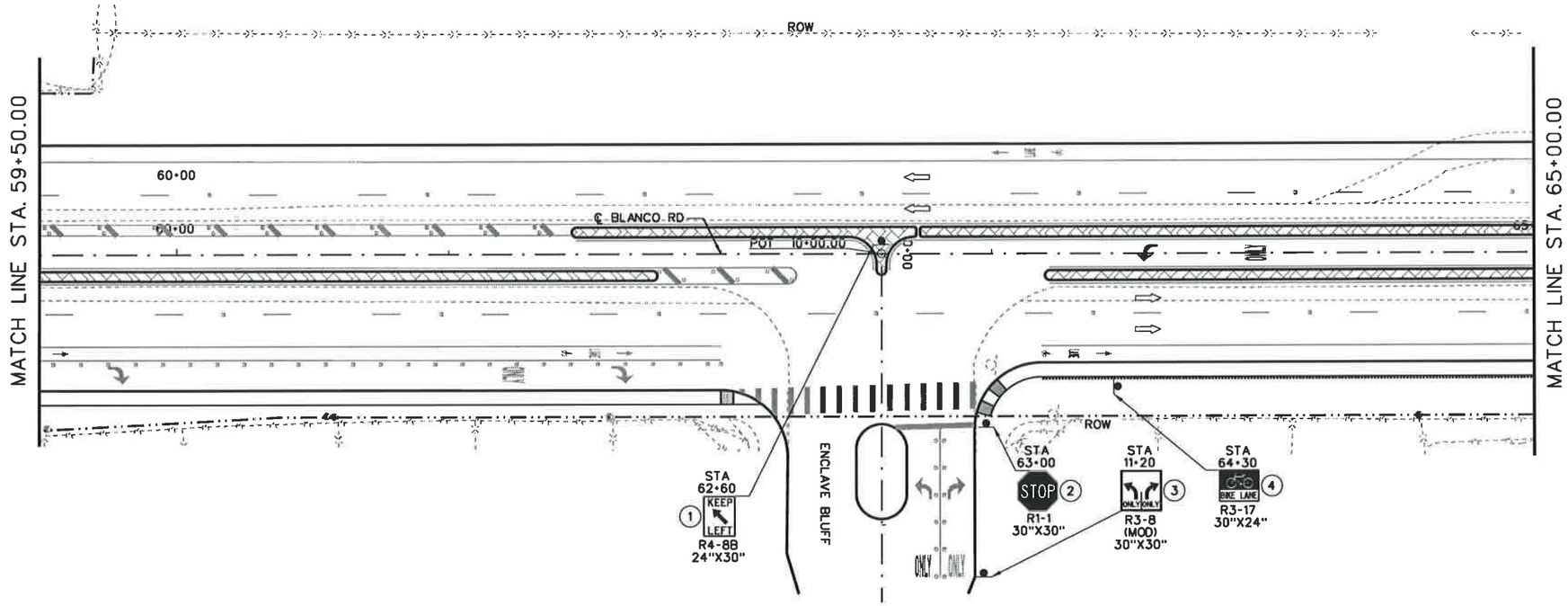

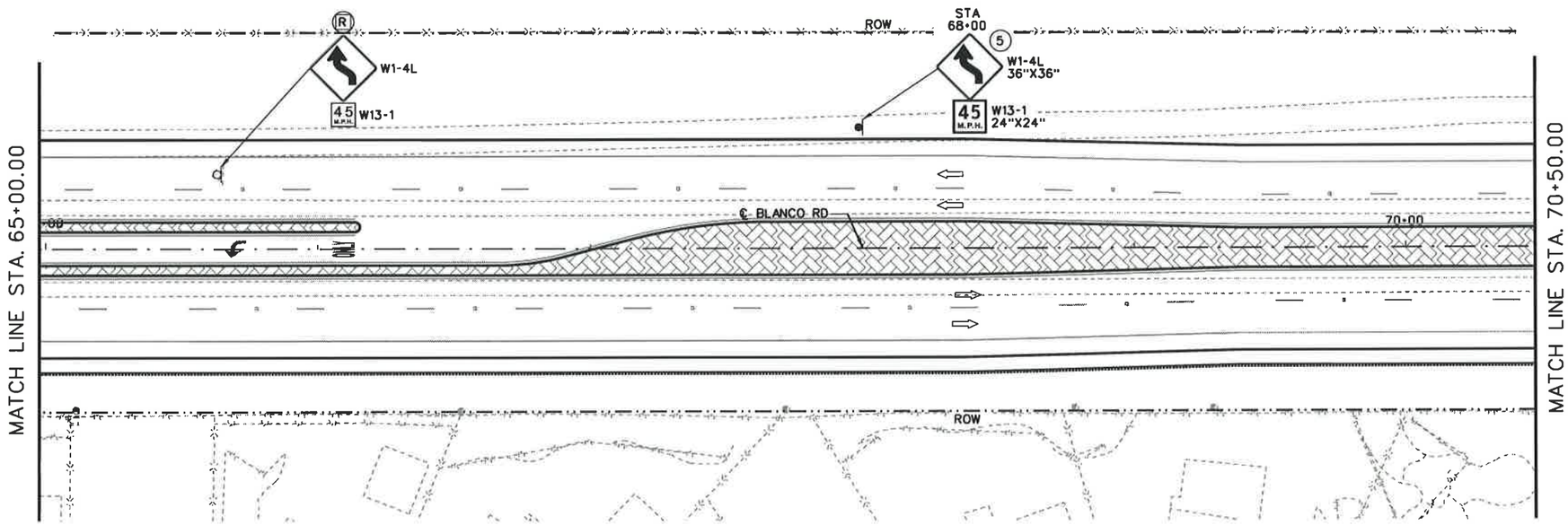

25 12.5 0 25 50
HORIZ. SCALE FEET

LEGEND

- PROPOSED SIGN
- EXISTING SIGN TO BE REMOVED
- EXISTING SIGN TO REMAIN
- EXISTING SIGN TO RELOCATED
- DIRECTION OF TRAFFIC FLOW

STATE OF TEXAS
JOSE A. SANCHEZ
87890
LICENSED
PROFESSIONAL ENGINEER

2007.12.07

JOSE A. SANCHEZ DATE

NO.	REVISION	BY	DATE

CP&Y Chiang, Patel & Yerby, Inc.

TEDSI INFRASTRUCTURE GROUP
Consulting Engineers
10999 IH 10 West • Suite 320
San Antonio, Texas 78230
(210) 858-0610

BEXAR COUNTY
PUBLIC WORKS DIVISION

F.M. 2696 (BLANCO ROAD)

SIGNING LAYOUT

STA 59+50.00 TO STA 70+50.00

SHEET 6 OF 19

Designed: RC	STATE	BEXAR COUNTY FILE NUMBER	PLAN SET NO. 699
Checked: JAS	TEXAS		OF 842
Drawn: RC	COUNTY		
Checked: JAS	BEXAR		

p:\2007\27958-1-blanco rd south\design\csj\traffic\Signing\6102SSRDSX06.DGN
12/7/2007 9:56:31 AM

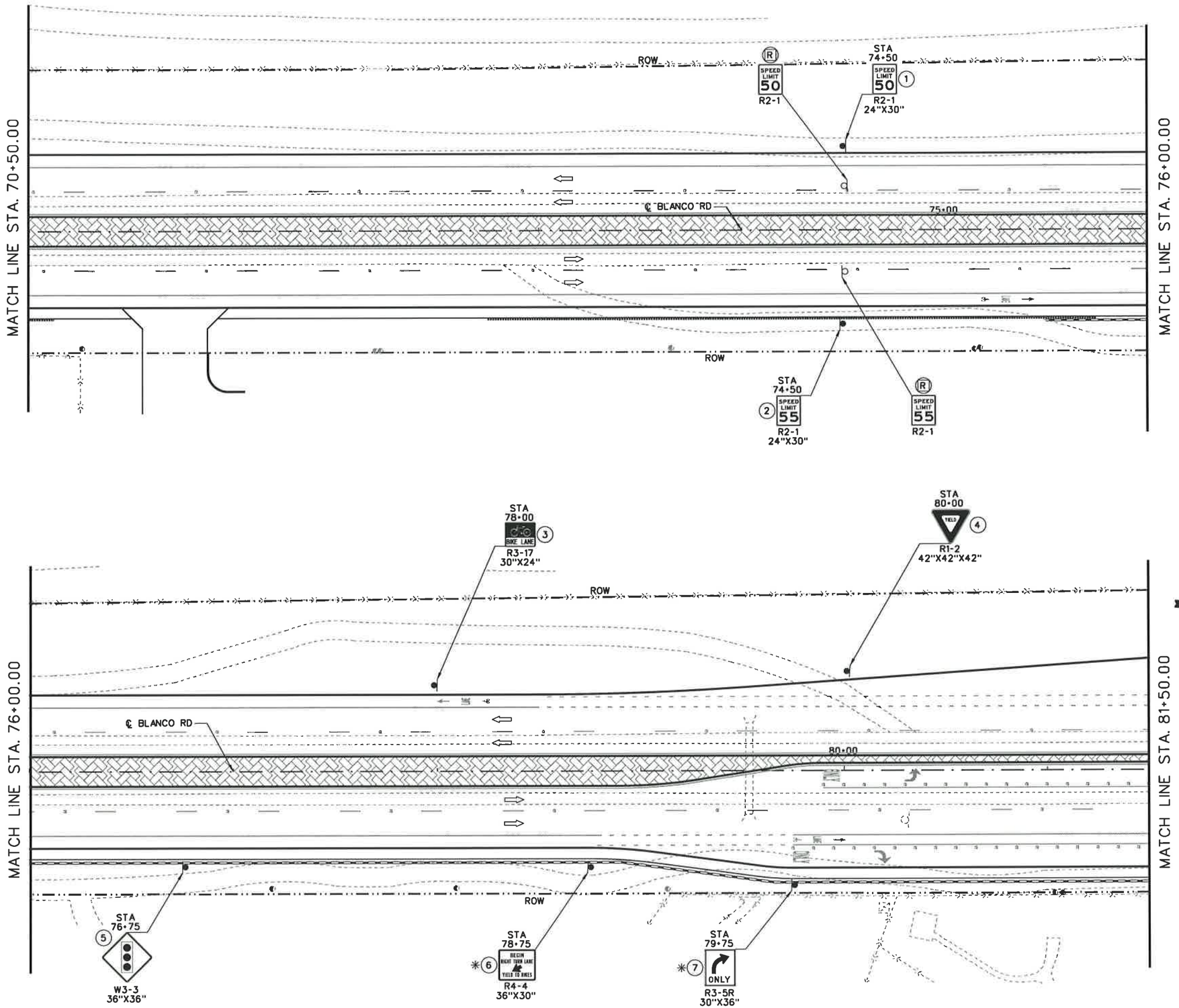

25 12.5 0 25 50
HORIZ. SCALE FEET

LEGEND

- PROPOSED SIGN
- EXISTING SIGN TO BE REMOVED
- EXISTING SIGN TO REMAIN
- EXISTING SIGN TO RELOCATED
- DIRECTION OF TRAFFIC FLOW

* A 6" THICK SIDEWALK IS REQUIRED AT THIS LOCATION FOR THE SB ANCHOR TYPE. PLACE BASE AS CLOSE AS POSSIBLE TO RAIL/COP AS ALLOWED BY STANDARD SHEET SMD (SLIP-1)-02.

STATE OF TEXAS
JOSE A. SANCHEZ
87890
LICENSED
PROFESSIONAL ENGINEER

2007.12.07

JOSE A. SANCHEZ DATE

NO.	REVISION	BY	DATE

CP&Y Chiang, Patel & Yerby, Inc.

TEDSI INFRASTRUCTURE GROUP
Consulting Engineers
10999 IH 10 West • Suite 320
San Antonio, Texas 78230
(210) 858-0610

BEXAR COUNTY
PUBLIC WORKS DIVISION

F.M. 2696 (BLANCO ROAD)

SIGNING LAYOUT

STA 70+50.00 TO STA 81+50.00

SHEET 7 OF 19

Designed: RC	STATE	BEXAR COUNTY FILE NUMBER	PLAN SET NO. 700
Checked: JAS	TEXAS		OF
Drawn: RC	COUNTY		842
Checked: JAS	BEXAR		

p:\2007\27958-1-blanco rd south\design\cad\traffic\Signing\61025SRDSK07.DGN
12/7/2007 9:56:36 AM

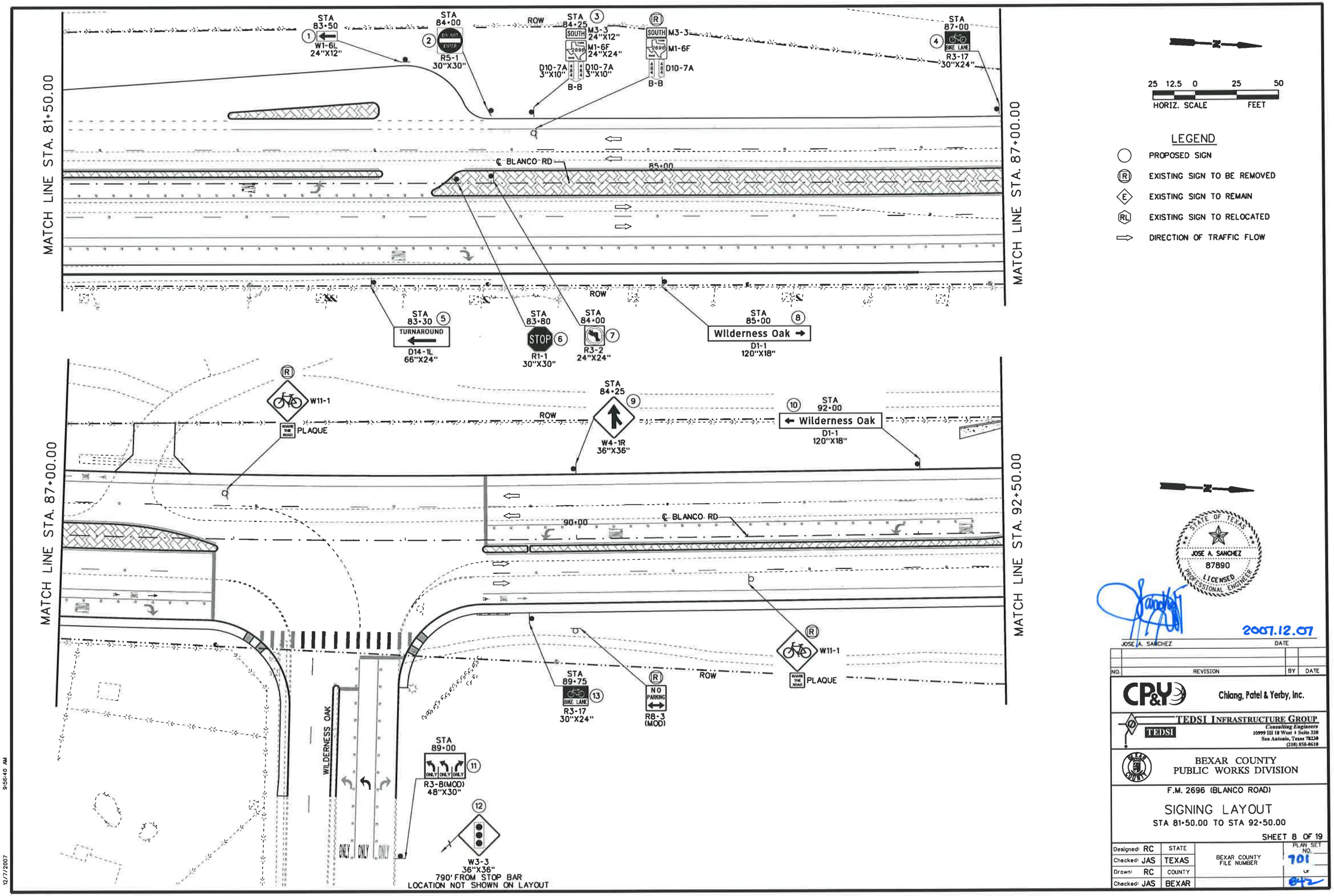

STATE OF TEXAS
JOSE A. SANCHEZ
87890
LICENSED
PROFESSIONAL ENGINEER

2007.12.07

JOSE A. SANCHEZ DATE

NO.	REVISION	BY	DATE

CP&Y Chiang, Patel & Yerby, Inc.

TEDSI INFRASTRUCTURE GROUP
Consulting Engineers
10999 IH 10 West • Suite 320
San Antonio, Texas 78230
(210) 858-8610

BEXAR COUNTY
PUBLIC WORKS DIVISION

F.M. 2696 (BLANCO ROAD)

SIGNING LAYOUT

STA 81+50.00 TO STA 92+50.00

SHEET 8 OF 19

Designed: RC	STATE	BEXAR COUNTY FILE NUMBER	PLAN SET NO. 701
Checked: JAS	TEXAS		
Drawn: RC	COUNTY		OF 872
Checked: JAS	BEXAR		

p:\2007\27958-1-blanco rd south\design\csj\traffic\Signing\61025SROSK08.DGN
12/7/2007 9:56:40 AM

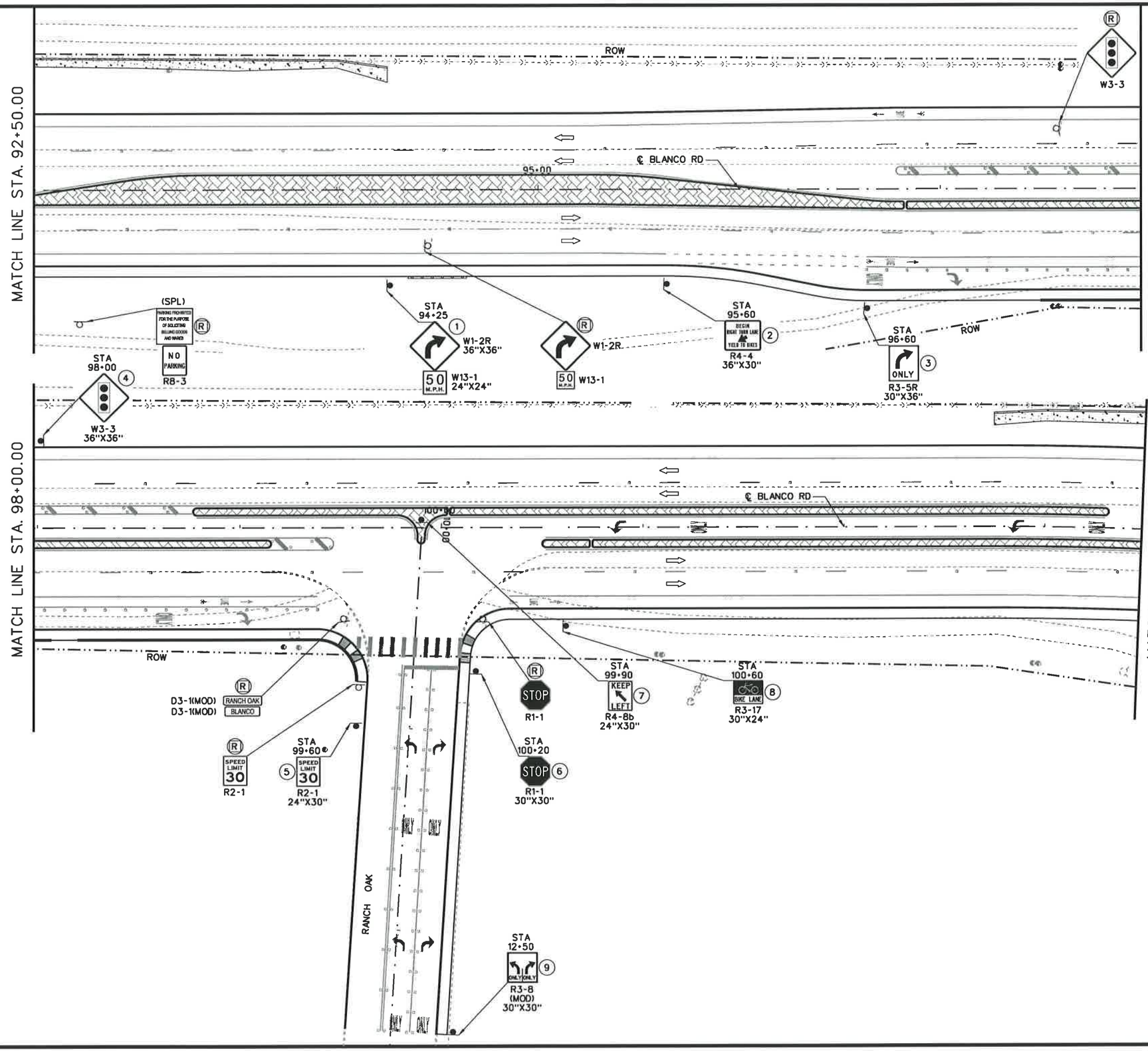

25 12.5 0 25 50
HORIZ. SCALE FEET

LEGEND

- PROPOSED SIGN
- EXISTING SIGN TO BE REMOVED
- EXISTING SIGN TO REMAIN
- EXISTING SIGN TO RELOCATED
- DIRECTION OF TRAFFIC FLOW

STATE OF TEXAS
JOSE A. SANCHEZ
87890
LICENSED
PROFESSIONAL ENGINEER

JOSE A. SANCHEZ — DATE 2007.12.07

NO.	REVISION	BY	DATE

CP&Y Chiang, Patel & Yerby, Inc.

TEDSI INFRASTRUCTURE GROUP
Consulting Engineers
10999 IH 10 West • Suite 320
San Antonio, Texas 78230
(210) 858-0610

BEXAR COUNTY
PUBLIC WORKS DIVISION

F.M. 2696 (BLANCO ROAD)

SIGNING LAYOUT
STA 92+50.00 TO STA 103+50.00

SHEET 9 OF 19

Designed: RC	STATE	BEXAR COUNTY FILE NUMBER	PLAN SET NO.
Checked: JAS	TEXAS		702
Drawn: RC	COUNTY		OF
Checked: JAS	BEXAR		842

p:\2007\27958-1-blanco rd south\design\csj\traffic\Signing\61022SSR09S\C09.DGN
12/7/2007 10:12:42 AM

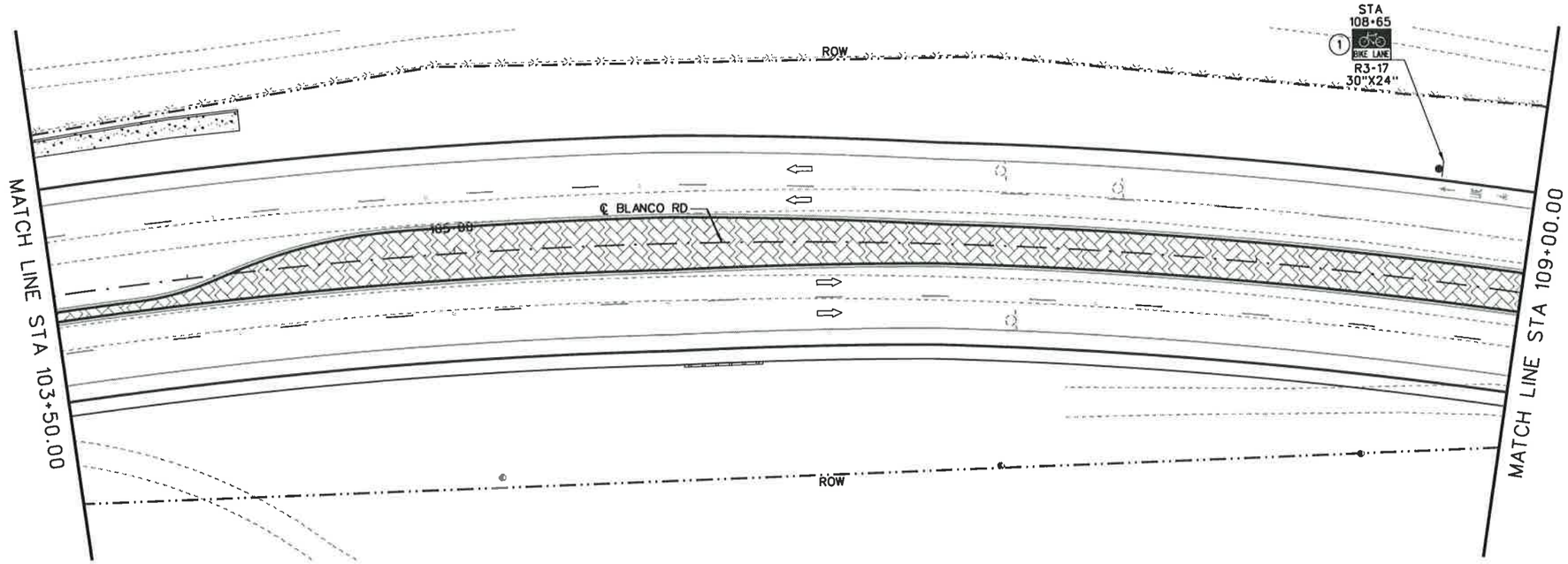

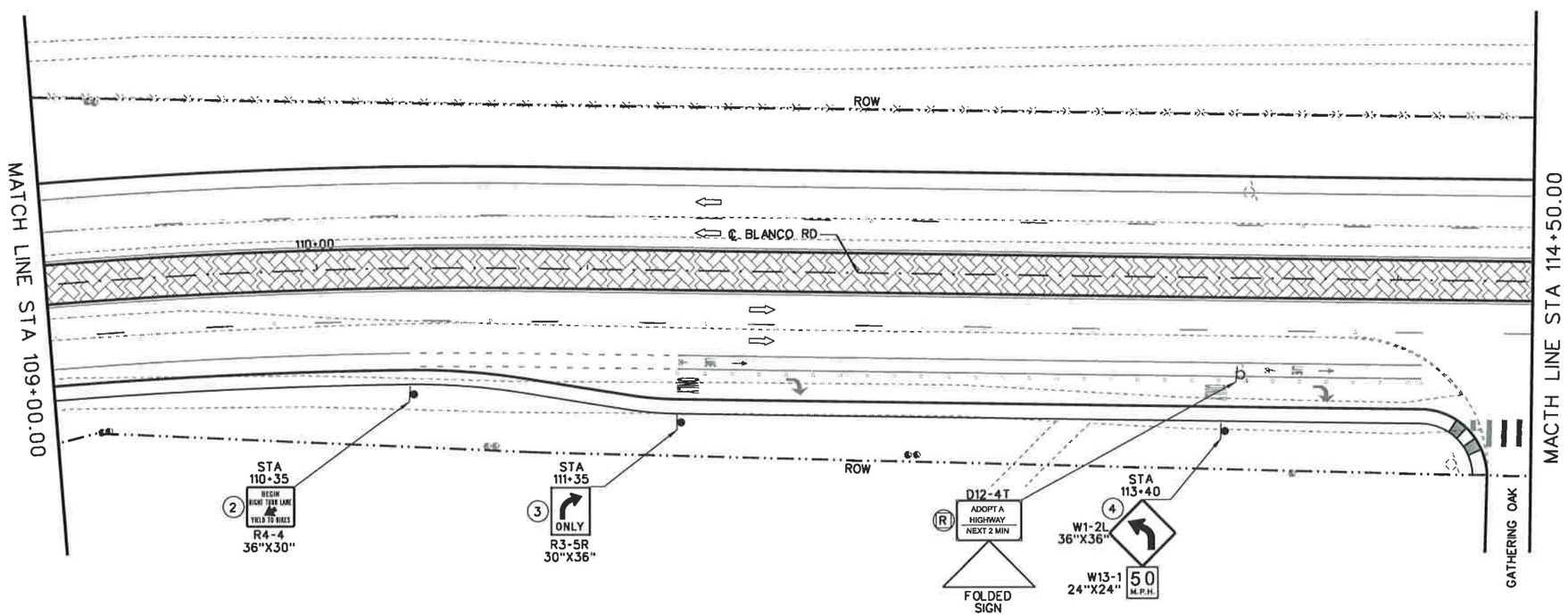

25 12.5 0 25 50
HORIZ. SCALE FEET

LEGEND

- PROPOSED SIGN
- (R) EXISTING SIGN TO BE REMOVED
- (E) EXISTING SIGN TO REMAIN
- (RL) EXISTING SIGN TO RELOCATED
- DIRECTION OF TRAFFIC FLOW

STATE OF TEXAS
JOSE A. SANCHEZ
87890
LICENSED
PROFESSIONAL ENGINEER

2007.12.07

JOSE A. SANCHEZ DATE

NO.	REVISION	BY	DATE

CP&Y Chiang, Patel & Yerby, Inc.

TEDSI INFRASTRUCTURE GROUP
Consulting Engineers
10999 IH 10 West • Suite 320
San Antonio, Texas 78230
(210) 858-0610

BEXAR COUNTY
PUBLIC WORKS DIVISION

F.M. 2696 (BLANCO ROAD)

SIGNING LAYOUT

STA 103+50.00 TO STA 114+50.00

SHEET 10 OF 19

Designed: RC	STATE	BEXAR COUNTY FILE NUMBER	PLAN SET NO.
Checked: JAS	TEXAS		793
Drawn: RC	COUNTY		OF
Checked: JAS	BEXAR		872

p:\2007\27958-1-blanco rd south\design\cs\traffic\Signing\61025SR05K10.DGN
12/7/2007 9:56:48 AM

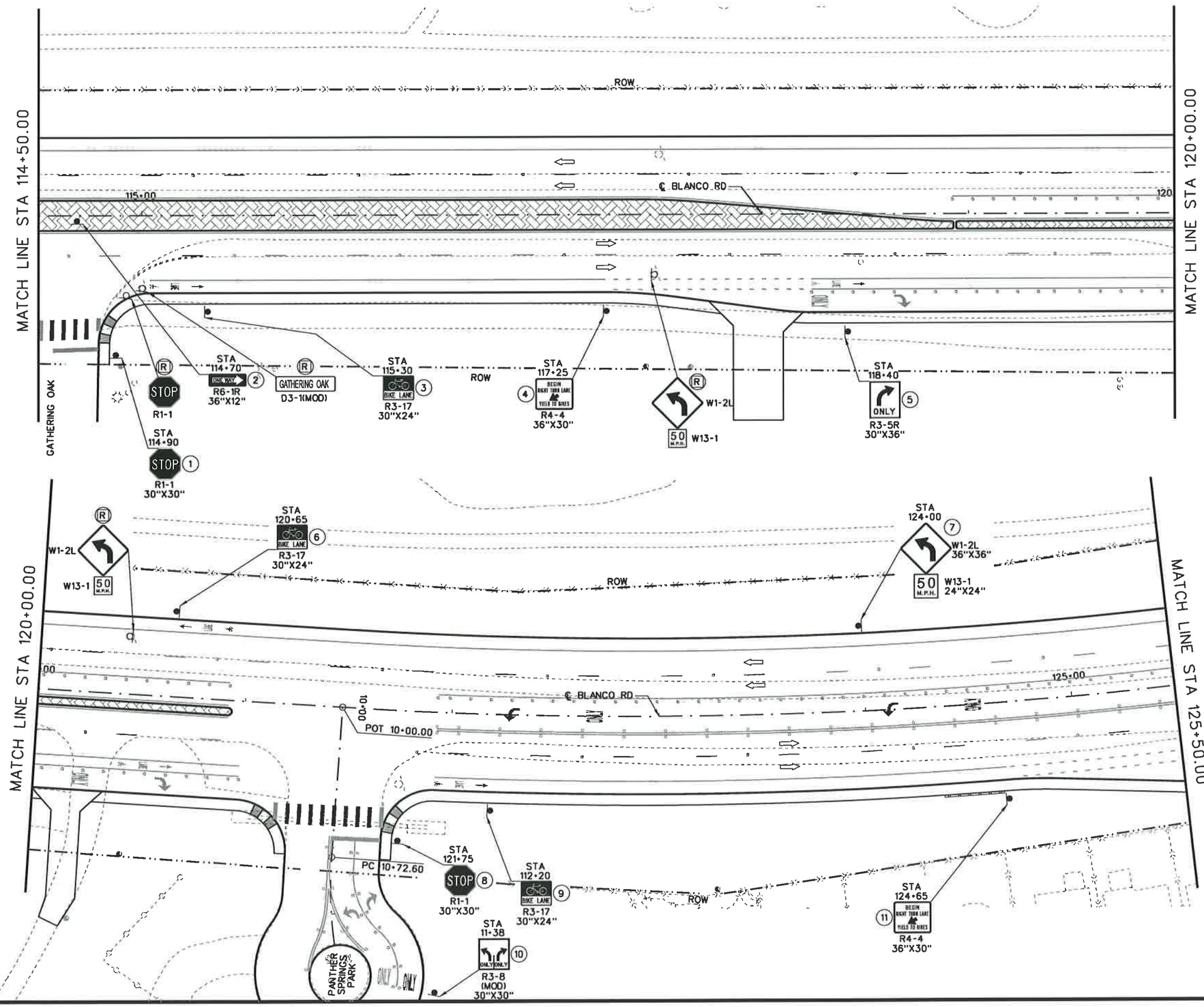

25 12.5 0 25 50
HORIZ. SCALE FEET

LEGEND

- PROPOSED SIGN
- EXISTING SIGN TO BE REMOVED
- EXISTING SIGN TO REMAIN
- EXISTING SIGN TO RELOCATED
- DIRECTION OF TRAFFIC FLOW

STATE OF TEXAS
JOSE A. SANCHEZ
87890
LICENSED
PROFESSIONAL ENGINEER

JOSE A. SANCHEZ 2007.12.07
DATE

NO.	REVISION	BY	DATE

CP&Y Chiang, Patel & Yerby, Inc.

TEDSI INFRASTRUCTURE GROUP
Consulting Engineers
10999 IH 10 West • Suite 320
San Antonio, Texas 78230
(210) 858-0610

BEXAR COUNTY
PUBLIC WORKS DIVISION

F.M. 2696 (BLANCO ROAD)

SIGNING LAYOUT

STA 114+50.00 TO STA 125+50.00

SHEET 11 OF 19

Designed: RC	STATE	BEXAR COUNTY FILE NUMBER	PLAN SET NO. 704
Checked: JAS	TEXAS		OF 842
Drawn: RC	COUNTY		
Checked: JAS	BEXAR		

p:\2007\27958-1-blanco rd south\design\csj\traffic\Signing\6102SSR05K11.DGN
12/7/2007 10:12:51 AM

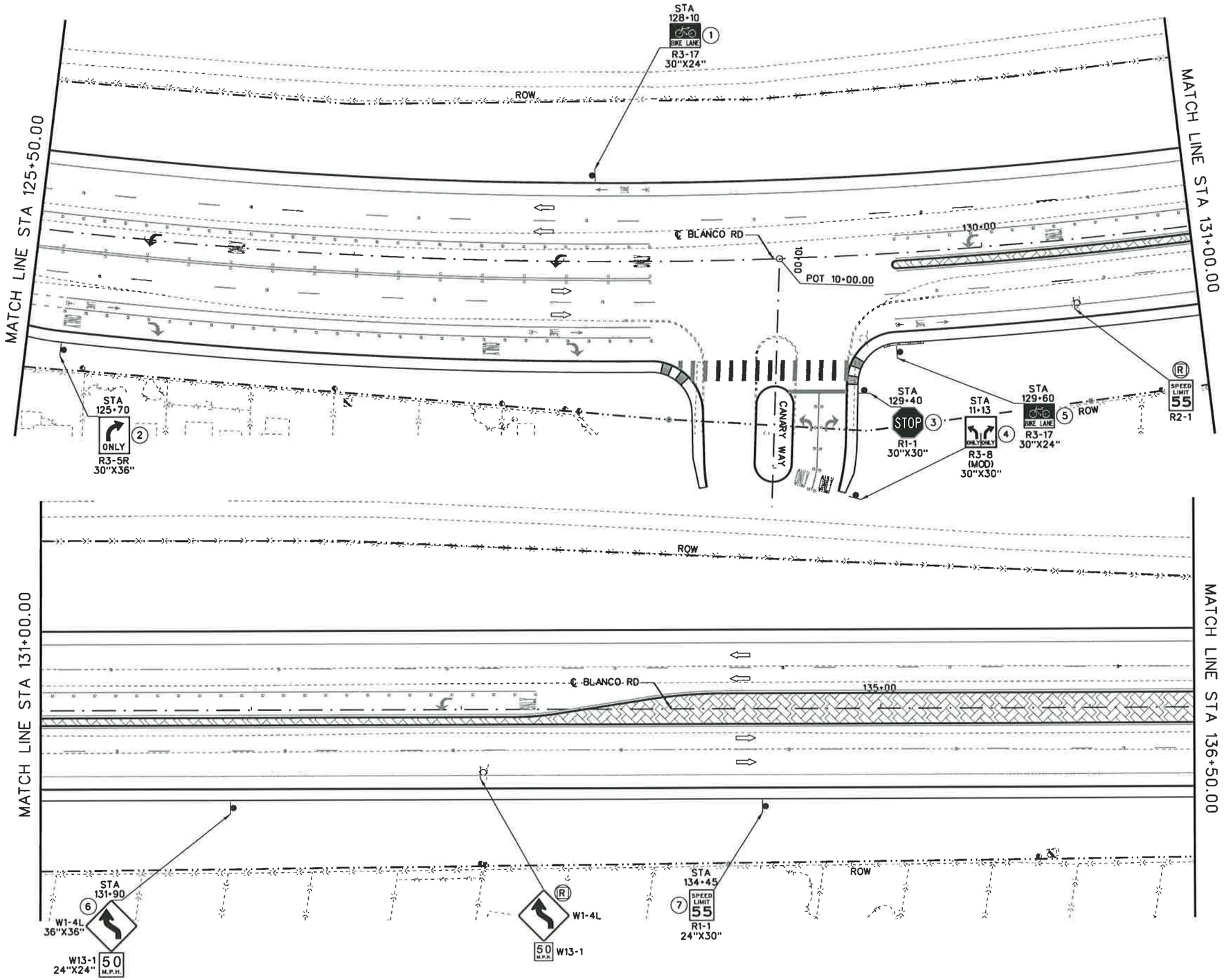

25 12.5 0 25 50
HORIZ. SCALE FEET

LEGEND

- PROPOSED SIGN
- EXISTING SIGN TO BE REMOVED
- EXISTING SIGN TO REMAIN
- EXISTING SIGN TO RELOCATED
- DIRECTION OF TRAFFIC FLOW

STATE OF TEXAS
JOSE A. SANCHEZ
87890
LICENSED
PROFESSIONAL ENGINEER

2007.12.07

JOSE A. SANCHEZ DATE

NO.	REVISION	BY	DATE

CP&Y Chiang, Patel & Yerby, Inc.

TEDSI INFRASTRUCTURE GROUP
Consulting Engineers
10999 IH 10 West • Suite 320
San Antonio, Texas 78230
(210) 858-0610

BEXAR COUNTY
PUBLIC WORKS DIVISION

F.M. 2696 (BLANCO ROAD)

SIGNING LAYOUT

STA 125+50.00 TO STA 136+50.00

SHEET 12 OF 19

Designed: RC	STATE	BEXAR COUNTY FILE NUMBER	PLAN SET NO. 705
Checked: JAS	TEXAS		
Drawn: RC	COUNTY		OF 872
Checked: JAS	BEXAR		

p:\2007\27958-1-blanco rd south\design\csj\traffic\Signing\6102SSRDSK12.DGN
12/7/2007 9:56:56 AM

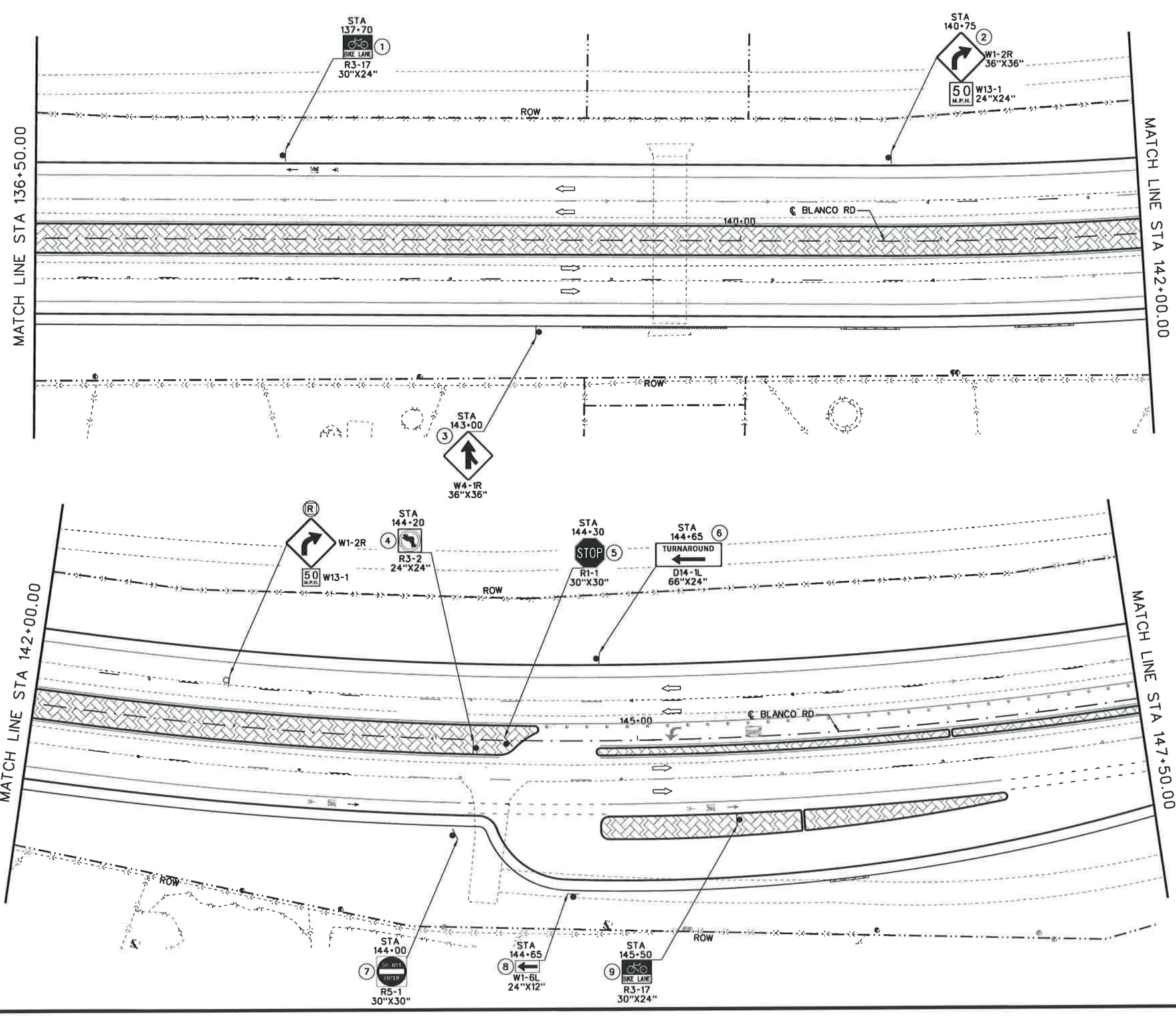

25 12.5 0 25 50
HORIZ. SCALE FEET

LEGEND

- PROPOSED SIGN
- EXISTING SIGN TO BE REMOVED
- EXISTING SIGN TO REMAIN
- EXISTING SIGN TO RELOCATED
- DIRECTION OF TRAFFIC FLOW

STATE OF TEXAS
JOSE A. SANCHEZ
87890
LICENSED
PROFESSIONAL ENGINEER

2007.12.07

JOSE A. SANCHEZ DATE

NO.	REVISION	BY	DATE

CP&Y Chiang, Patel & Yerby, Inc.

TEDSI INFRASTRUCTURE GROUP
Consulting Engineers
10999 IH 10 West • Suite 320
San Antonio, Texas 78230
(210) 858-8610

BEXAR COUNTY
PUBLIC WORKS DIVISION

F.M. 2696 (BLANCO ROAD)

SIGNING LAYOUT

STA 136+50.00 TO STA 147+50.00

SHEET 13 OF 19

Designed: RC	STATE	BEXAR COUNTY FILE NUMBER	PLAN SET NO. 706
Checked: JAS	TEXAS		OF 842
Drawn: RC	COUNTY		
Checked: JAS	BEXAR		

p:\2007\27958-1-blanco rd south\design\cs\traffic\Signing\61025SR05SK13.DGN
12/7/2007 10:12:59 AM

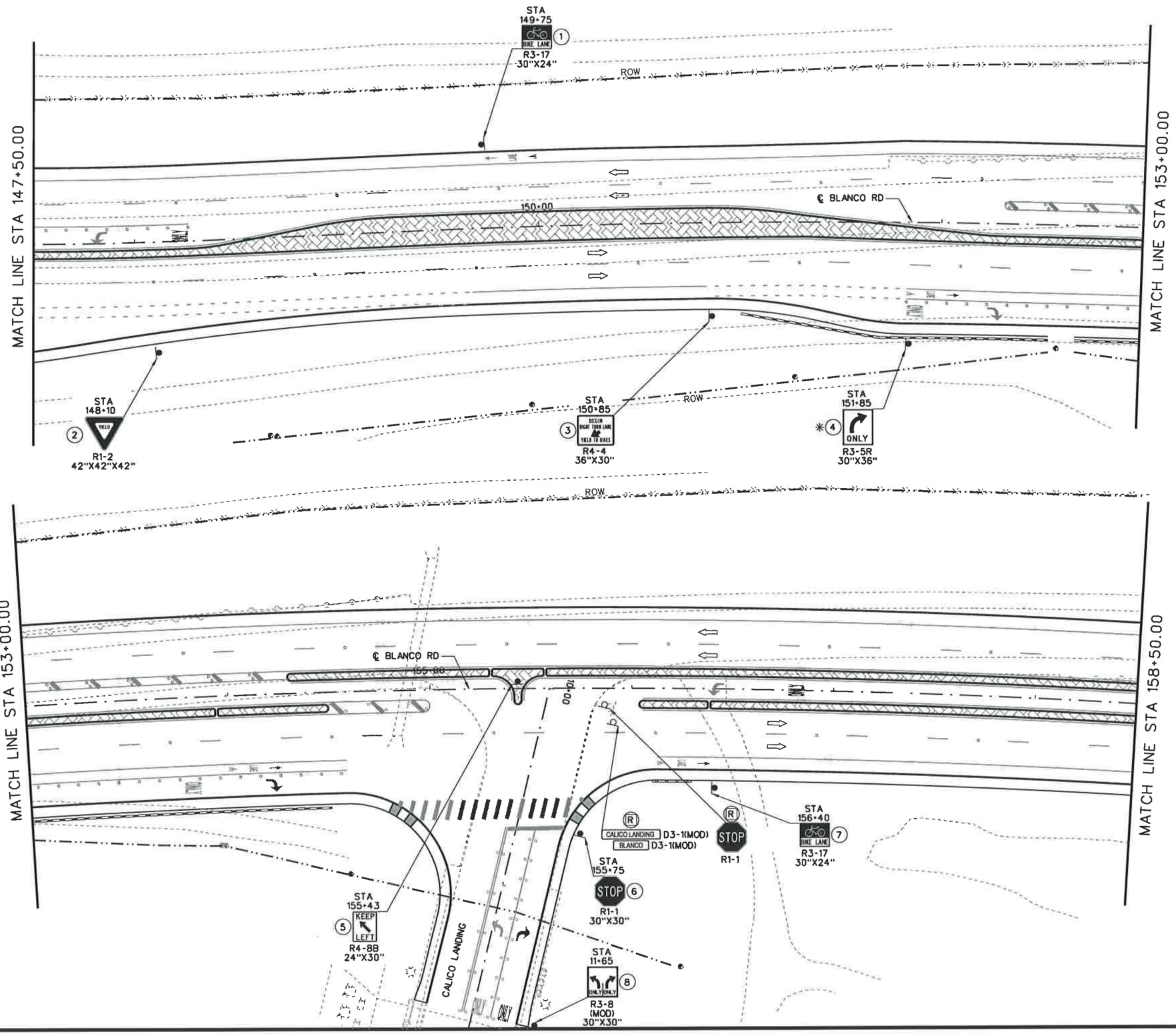

25 12.5 0 25 50
HORIZ. SCALE FEET

LEGEND

- PROPOSED SIGN
- EXISTING SIGN TO BE REMOVED
- EXISTING SIGN TO REMAIN
- EXISTING SIGN TO RELOCATED
- DIRECTION OF TRAFFIC FLOW

* A 6" THICK SIDEWALK IS REQUIRED AT THIS LOCATION FOR THE SB ANCHOR TYPE. PLACE BASE AS CLOSE AS POSSIBLE TO RAIL/COP AS ALLOWED BY STANDARD SHEET SMD (SLIP-1)-02.

STATE OF TEXAS
JOSE A. SANCHEZ
87890
LICENSED
PROFESSIONAL ENGINEER

JOSE A. SANCHEZ 2007.12.07
DATE

NO.	REVISION	BY	DATE

CP&Y Chiang, Patel & Yerby, Inc.

TEDSI INFRASTRUCTURE GROUP
Consulting Engineers
10999 IH 10 West • Suite 320
San Antonio, Texas 78230
(210) 858-0610

BEXAR COUNTY
PUBLIC WORKS DIVISION

F.M. 2696 (BLANCO ROAD)

SIGNING LAYOUT
STA 147+50.00 TO STA 158+50.00

SHEET 14 OF 19

Designed: RC	STATE	BEXAR COUNTY FILE NUMBER	PLAN SET NO. 707
Checked: JAS	TEXAS		OF
Drawn: RC	COUNTY		842
Checked: JAS	BEXAR		

p:\2007\27958-1-blanco rd south\design\cs\traffic\Signing\5102SSRDSK14.DGN
12/7/2007 10:13:03 AM

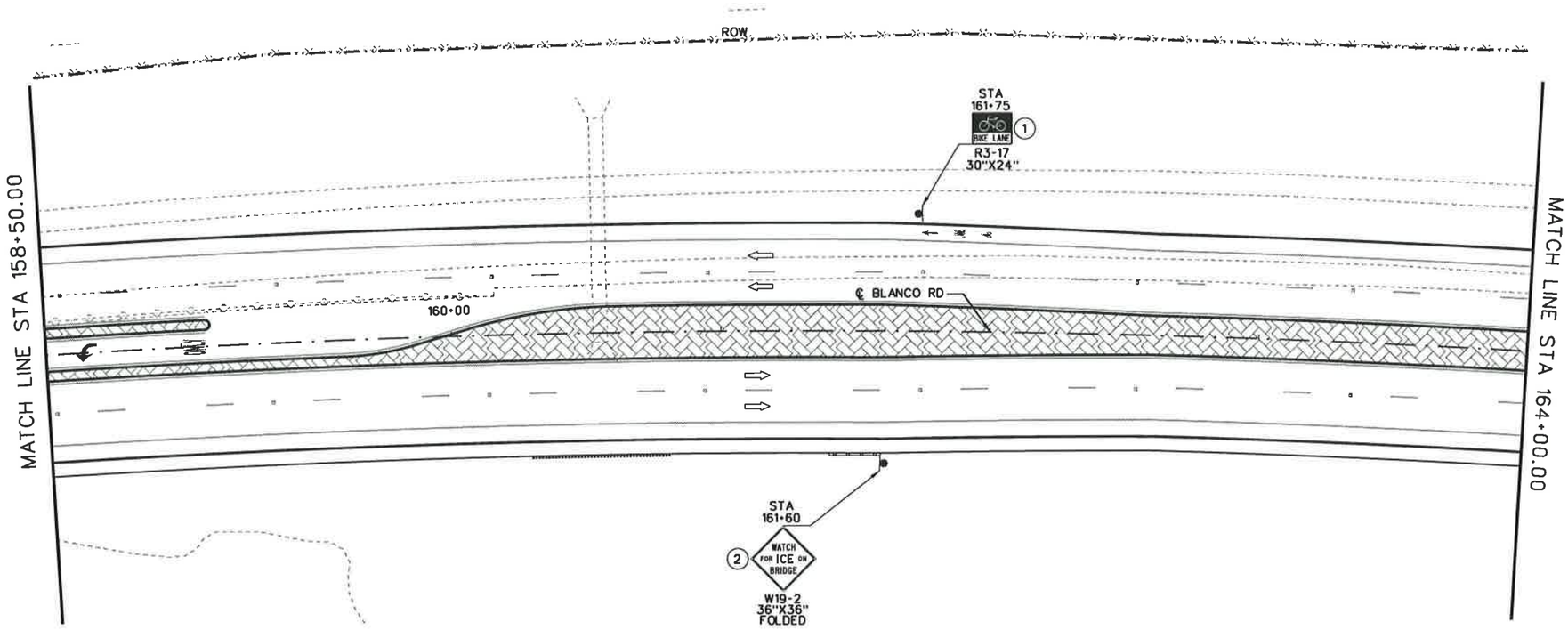

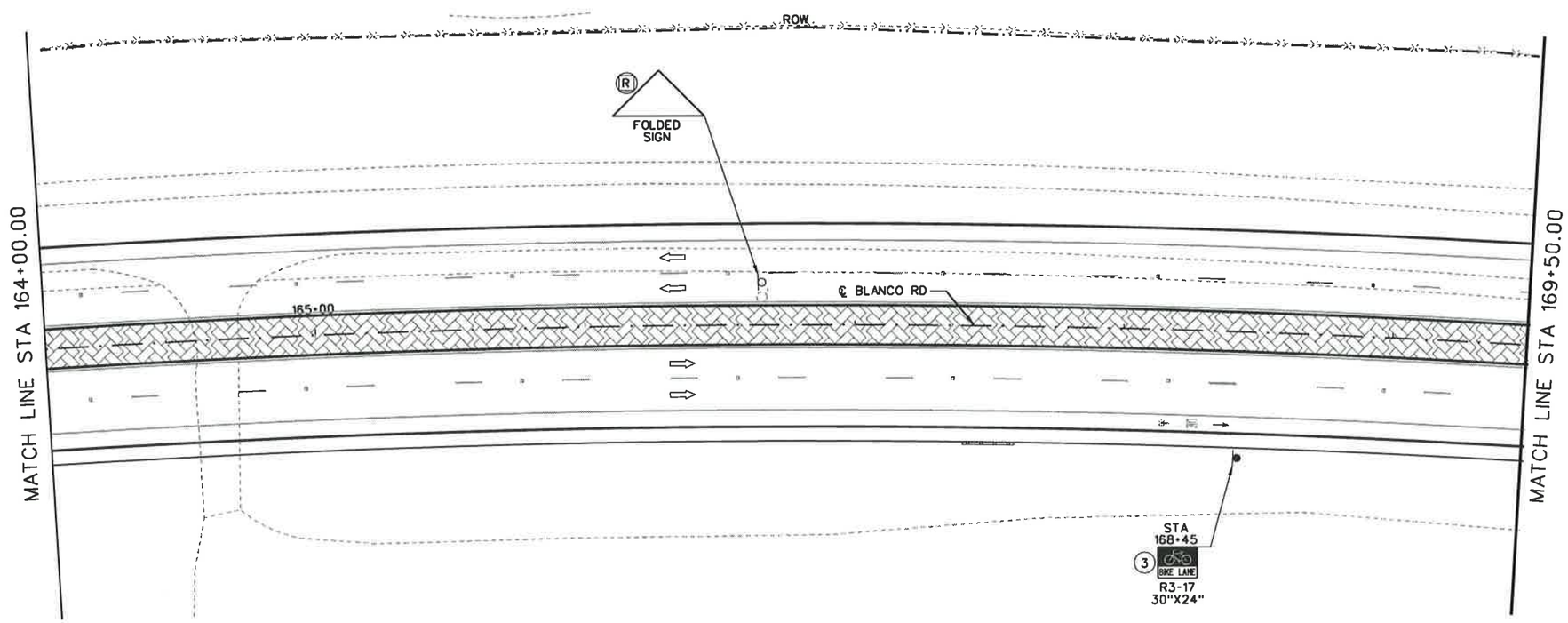

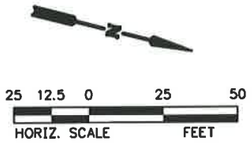

LEGEND

- PROPOSED SIGN
- EXISTING SIGN TO BE REMOVED
- EXISTING SIGN TO REMAIN
- EXISTING SIGN TO RELOCATED
- DIRECTION OF TRAFFIC FLOW

STATE OF TEXAS
JOSE A. SANCHEZ
87890
LICENSED
PROFESSIONAL ENGINEER

2007.12.07

JOSE A. SANCHEZ DATE

NO.	REVISION	BY	DATE

CP&Y Chiang, Patel & Yerby, Inc.

TEDSI INFRASTRUCTURE GROUP
Consulting Engineers
10999 IH 10 West • Suite 330
San Antonio, Texas 78230
(210) 858-0610

BEXAR COUNTY
PUBLIC WORKS DIVISION

F.M. 2696 (BLANCO ROAD)

SIGNING LAYOUT

STA 158+50 TO STA 169+50.00

SHEET 15 OF 19

Designed: RC	STATE	BEXAR COUNTY FILE NUMBER	PLAN SET NO. 708
Checked: JAS	TEXAS		OF 842
Drawn: RC	COUNTY		
Checked: JAS	BEXAR		

p:\2007\27958-t-blanco rd south\design\cs\traffic\Signing\61025SR05K15.DGN
10:13:07 AM
12/7/2007

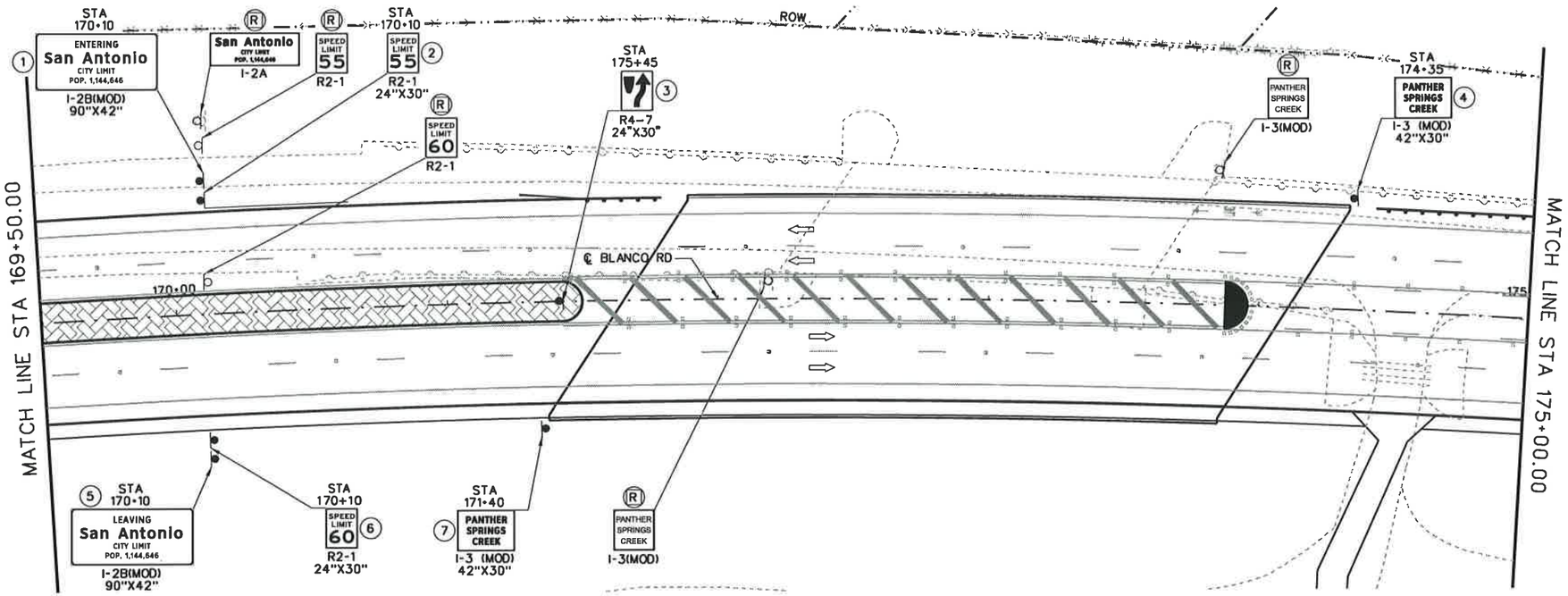

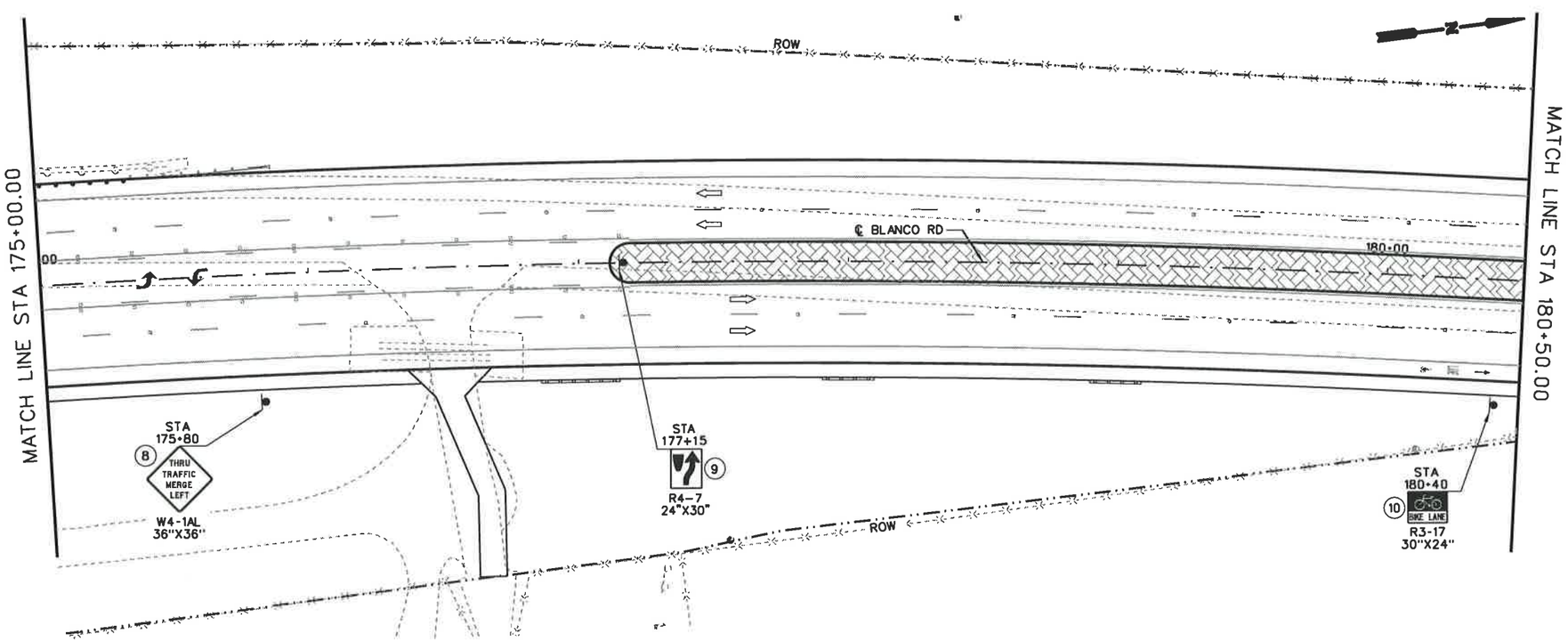

25 12.5 0 25 50
SCALE FEET

LEGEND

- PROPOSED SIGN
- EXISTING SIGN TO BE REMOVED
- EXISTING SIGN TO REMAIN
- EXISTING SIGN TO RELOCATED
- DIRECTION OF TRAFFIC FLOW

STATE OF TEXAS
JOSE A. SANCHEZ
87890
LICENSED
PROFESSIONAL ENGINEER

JOSE A. SANCHEZ — DATE 2007.12.07

NO.	REVISION	BY	DATE

CP&Y Chiang, Patel & Yerby, Inc.

TEDSI INFRASTRUCTURE GROUP
Consulting Engineers
10999 IH 10 West • Suite 320
San Antonio, Texas 78230
(210) 858-8610

BEXAR COUNTY PUBLIC WORKS DIVISION

F.M. 2696 (BLANCO ROAD)

SIGNING LAYOUT

STA 169+50.00 TO STA 180+50.00

SHEET 16 OF 19

Designed: RC	STATE	BEXAR COUNTY FILE NUMBER	PLAN SET NO. 79 OF 842
Checked: JAS	TEXAS		
Drawn: RC	COUNTY		
Checked: JAS	BEXAR		

p:\2007\27958-1-blanco rd south\design\csj\traffic\Signing\6102SSRDSK16.DGN
12/7/2007 10:13:11 AM

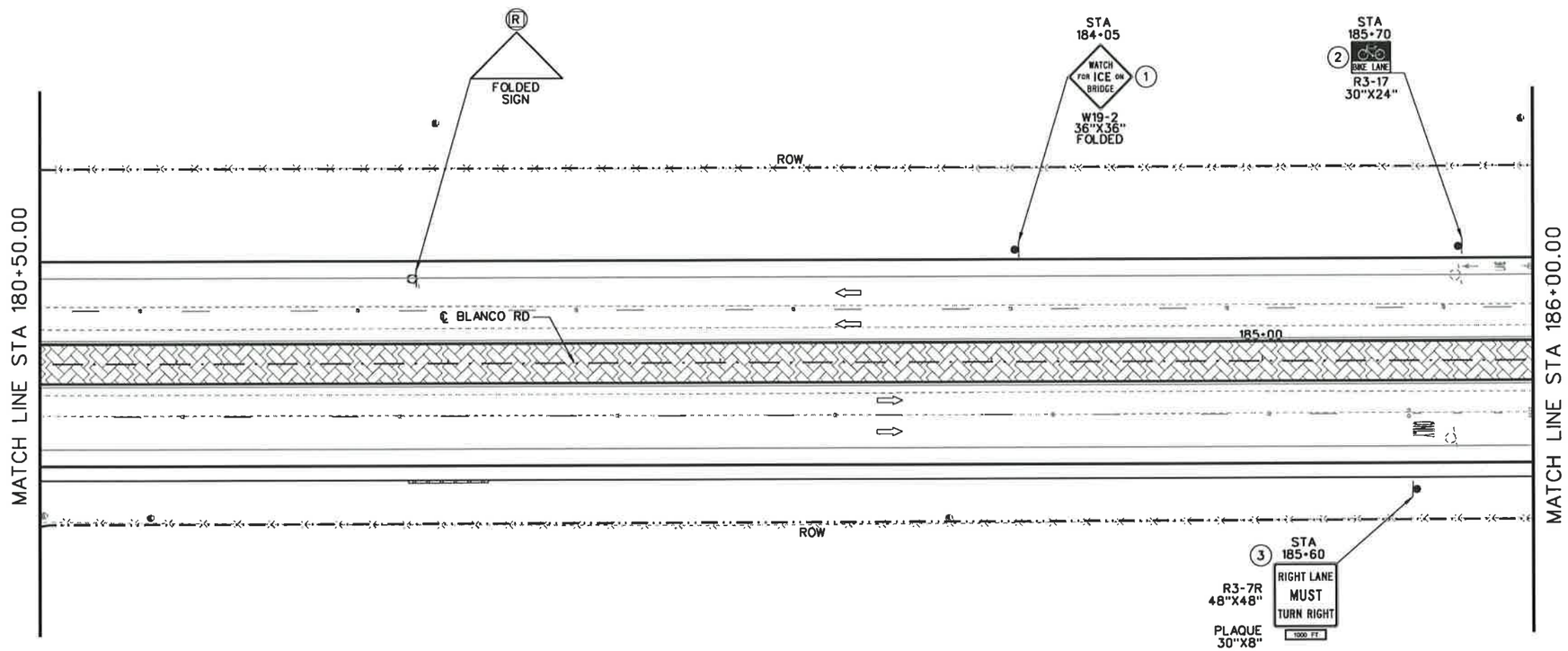

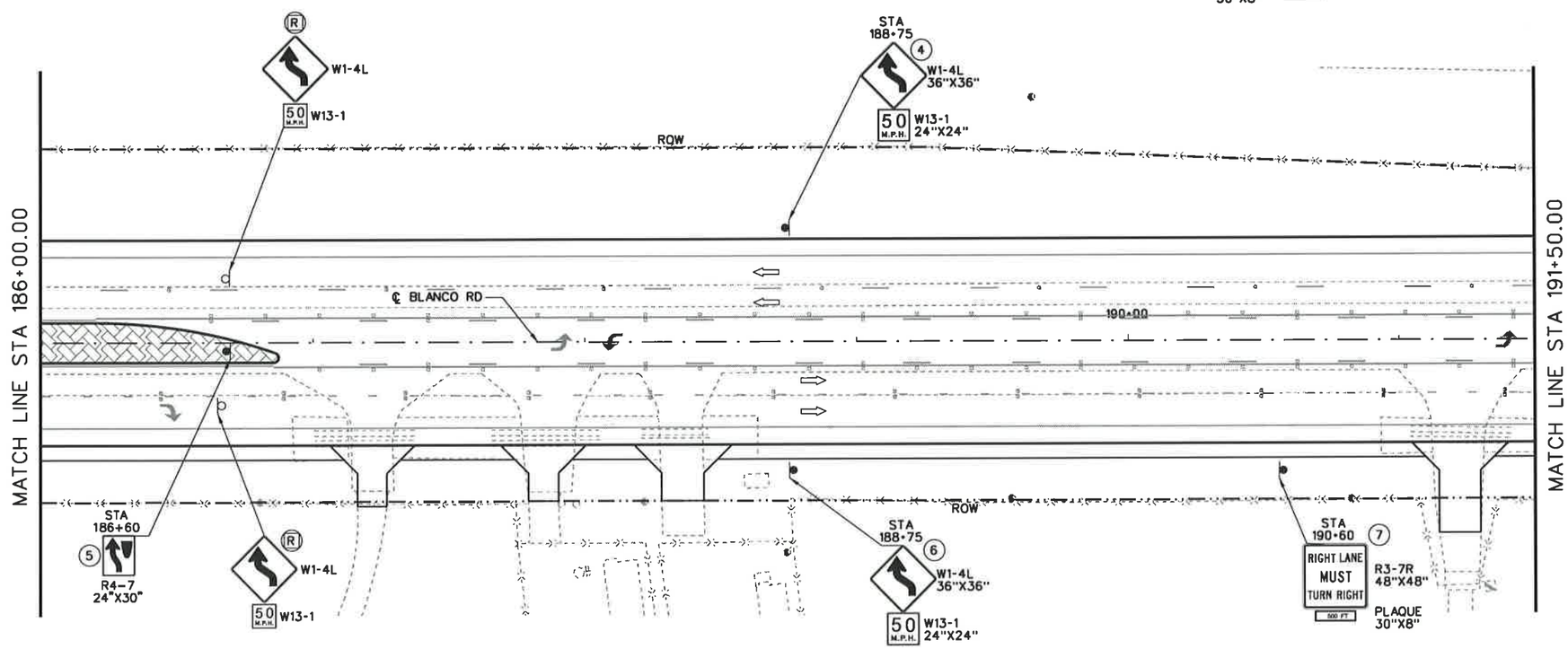

25 12.5 0 25 50
HORIZ. SCALE FEET

LEGEND

- PROPOSED SIGN
- EXISTING SIGN TO BE REMOVED
- EXISTING SIGN TO REMAIN
- EXISTING SIGN TO RELOCATED
- DIRECTION OF TRAFFIC FLOW

STATE OF TEXAS
JOSE A. SANCHEZ
87890
LICENSED
PROFESSIONAL ENGINEER

JOSE A. SANCHEZ 2007.12.07
DATE

NO.	REVISION	BY	DATE

CP&Y Chiang, Patel & Yerby, Inc.

TEDSI INFRASTRUCTURE GROUP
Consulting Engineers
10999 IH 10 West • Suite 320
San Antonio, Texas 78230
(210) 858-0610

BEXAR COUNTY
PUBLIC WORKS DIVISION

F.M. 2696 (BLANCO ROAD)

SIGNING LAYOUT

STA 180+50.00 TO STA 191+50.00

SHEET 17 OF 19

Designed: RC	STATE	BEXAR COUNTY FILE NUMBER	PLAN SET NO.
Checked: JAS	TEXAS		710
Drawn: RC	COUNTY		OF
Checked: JAS	BEXAR		812

p:\2007\27958-1-blanco rd south\design\cs\traffic\signing\5102SRDSK17.DGN
12/7/2007 12:57:24 PM

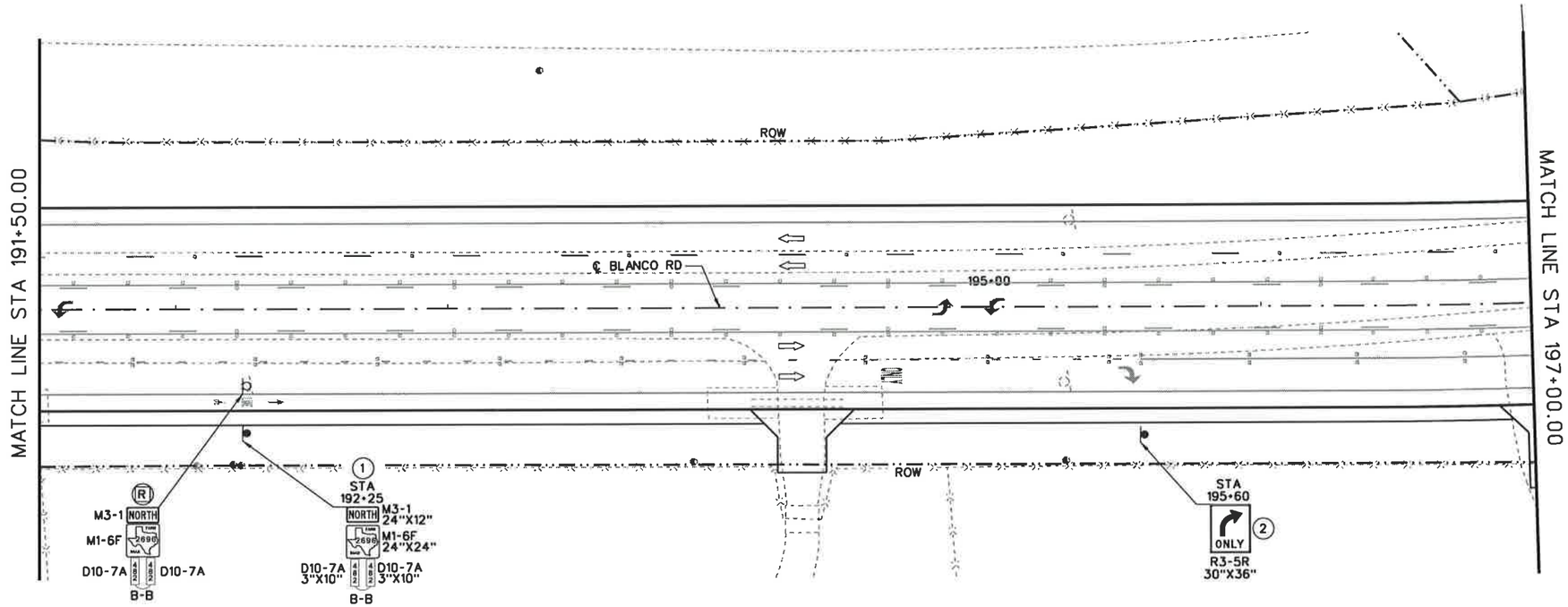

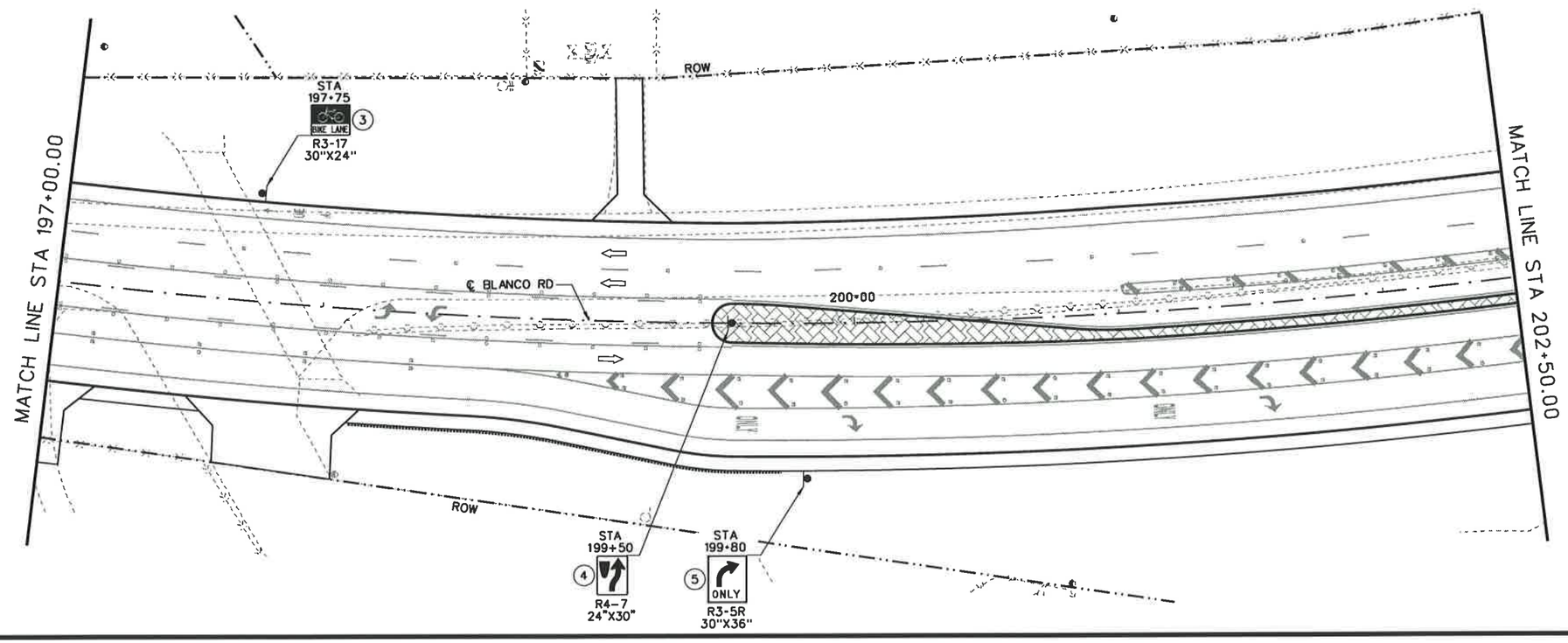

25 12.5 0 25 50
HORIZ. SCALE FEET

LEGEND

- PROPOSED SIGN
- (R) EXISTING SIGN TO BE REMOVED
- (E) EXISTING SIGN TO REMAIN
- (RL) EXISTING SIGN TO RELOCATED
- DIRECTION OF TRAFFIC FLOW

STATE OF TEXAS
JOSE A. SANCHEZ
87890
LICENSED
PROFESSIONAL ENGINEER

JOSE A. SANCHEZ — DATE 2007.12.07

NO.	REVISION	BY	DATE

CP&Y Chiang, Patel & Yerby, Inc.

TEDSI INFRASTRUCTURE GROUP
Consulting Engineers
10999 IH 10 West • Suite 320
San Antonio, Texas 78230
(210) 858-8410

BEXAR COUNTY
PUBLIC WORKS DIVISION

F.M. 2696 (BLANCO ROAD)

SIGNING LAYOUT

STA 191+50.00 TO STA 202+50.00

SHEET 18 OF 19

Designed: RC	STATE	BEXAR COUNTY FILE NUMBER	PLAN SET NO. 711
Checked: JAS	TEXAS		OF 842
Drawn: RC	COUNTY		
Checked: JAS	BEXAR		

p:\2007\27958-1-blanco rd south\design\csj\traffic\Signing\61025SRDSK18.DGN
12/7/2007 10:13:19 AM

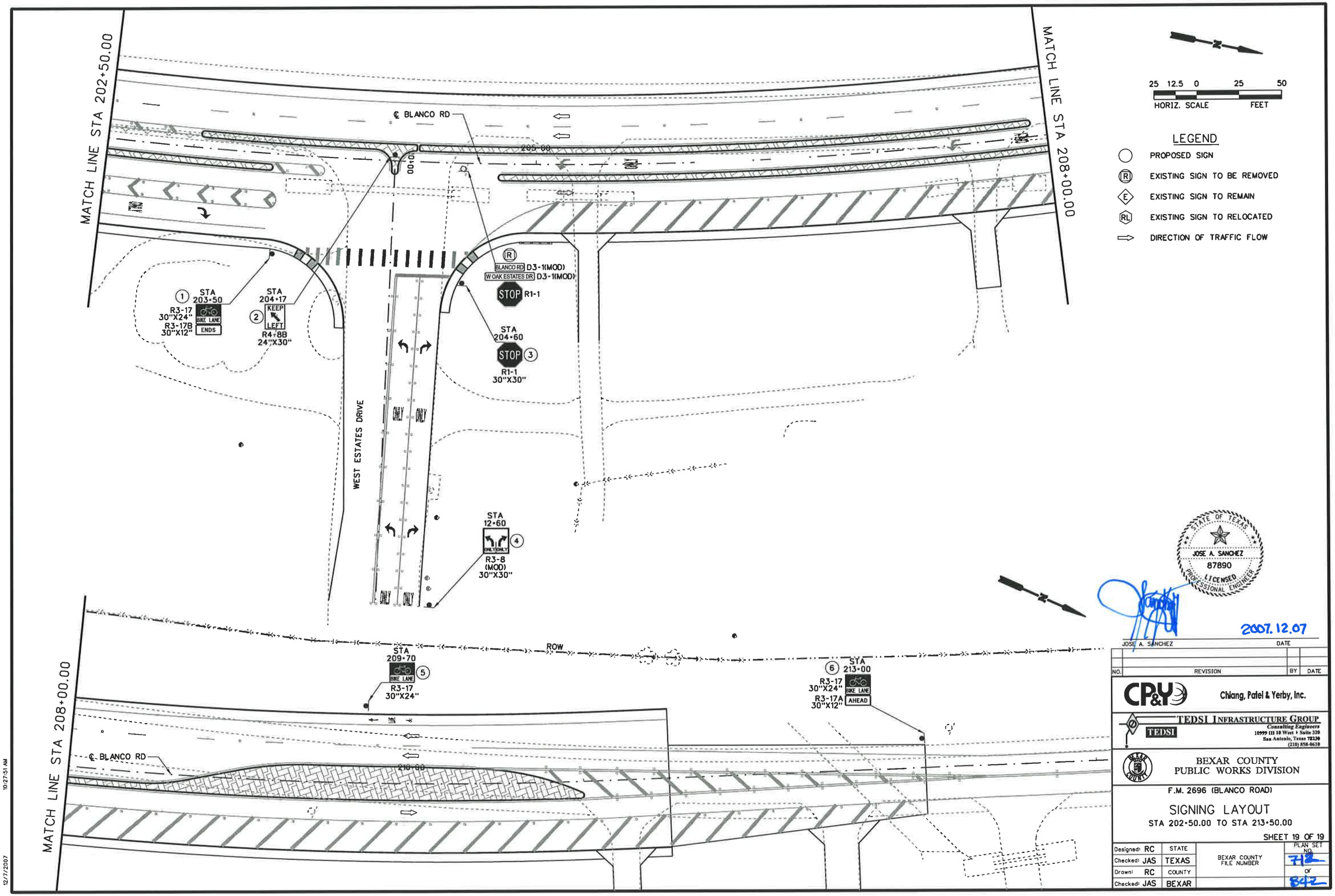
MATCH LINE STA 202+50.00
MATCH LINE STA 208+00.00
℄ BLANCO RD
205+00
10+00
WEST ESTATES DRIVE
ONLY
STA 203+50
R3-17
30"X24"
R3-17B
30"X12"
BIKE LANE
ENDS
STA 204+17
KEEP
LEFT
R4-8B
24"X30"
BLANCO RD D3-1(MOD)
W OAK ESTATES DR D3-1(MOD)
STOP R1-1
STA 204+60
STOP
R1-1
30"X30"
STA 12+60
ONLY
R3-8
(MOD)
30"X30"
STA 209+70
BIKE LANE
R3-17
30"X24"
ROW
STA 213+00
R3-17
30"X24"
BIKE LANE
R3-17A
30"X12"
AHEAD
℄ BLANCO RD
210+00
25 12.5 0 25 50
HORIZ. SCALE FEET
LEGEND
PROPOSED SIGN
EXISTING SIGN TO BE REMOVED
EXISTING SIGN TO REMAIN
EXISTING SIGN TO RELOCATED
DIRECTION OF TRAFFIC FLOW
STATE OF TEXAS
JOSE A. SANCHEZ
87890
LICENSED
PROFESSIONAL ENGINEER
2007.12.07
JOSE A. SANCHEZ DATE
NO. REVISION BY DATE
CP&Y Chiang, Patel & Yerby, Inc.
TEDSI INFRASTRUCTURE GROUP
Consulting Engineers
10999 IH 10 West • Suite 320
San Antonio, Texas 78230
(210) 858-0610
BEXAR COUNTY
PUBLIC WORKS DIVISION
F.M. 2696 (BLANCO ROAD)
SIGNING LAYOUT
STA 202+50.00 TO STA 213+50.00
SHEET 19 OF 19
Designed: RC
Checked: JAS
Drawn: RC
Checked: JAS
STATE TEXAS
COUNTY BEXAR
BEXAR COUNTY FILE NUMBER
PLAN SET NO. 712
OF 842
P:\2007\27958-1-Blanco Rd South\Design\CS\Traffic\Signing\6102SSR05K19.DGN
12/7/2007 10:27:51 AM

R3-8 (MOD) SIGN PANELS

✳ LETTER SPACING REDUCED BY 50%
ALL DIMENSIONS IN INCHES UNLESS OTHERWISE SPECIFIED
BORDER = 0.75"
INSET = 1.25"
RADIUS = 1.875"

60" X 30"

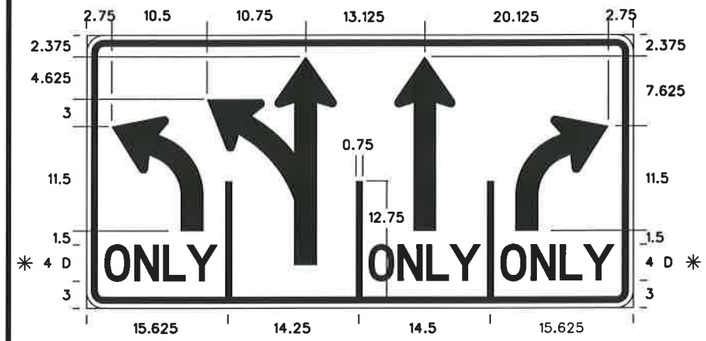

48" X 30"

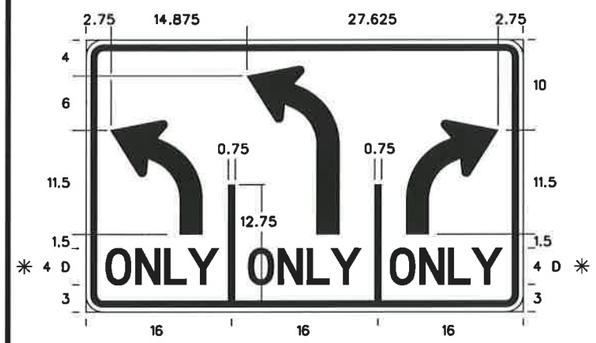

30" X 30"

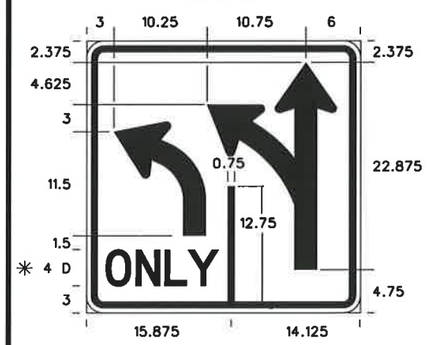

30" X 30"

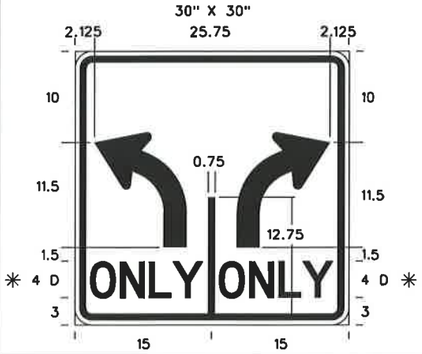

ARROW DETAILS

✳ LETTER SPACING REDUCED BY 50%

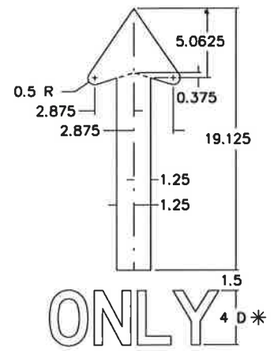

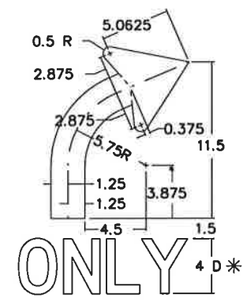

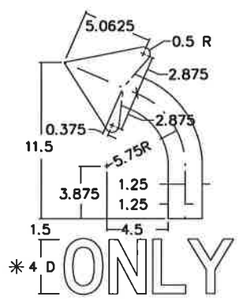

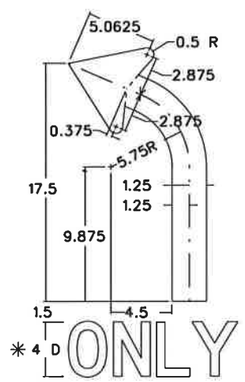

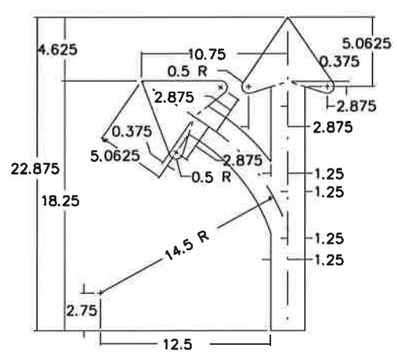

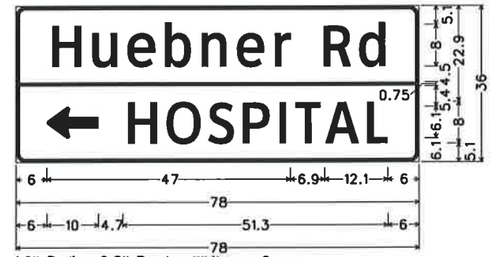

1.9" Radius, 0.8" Border, White on Green:
Huebner Rd - Clearview 3W: White on Green
Arrow Custom - 10.0", 180 deg: HOSPITAL - Clearview 3W: White on Blue
D1-2(MOD)

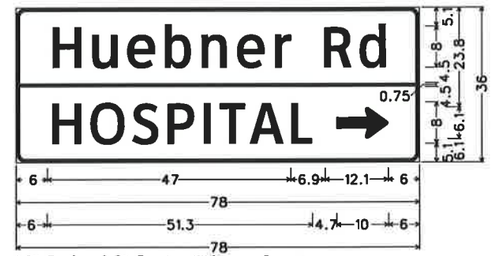

1.9" Radius, 0.8" Border, White on Green:
Huebner Rd - Clearview 3W: White on Green:
HOSPITAL - Clearview 3W: Arrow Custom - 10.0", 0 deg: White on Blue
D1-2(MOD)

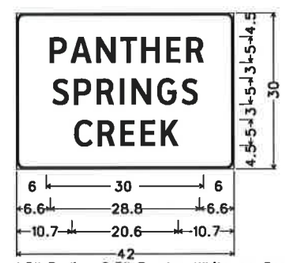

1.5" Radius, 0.5" Border, White on Green:
PANTHER SPRINGS CREEK - Clearview 3W
I-3(MOD)

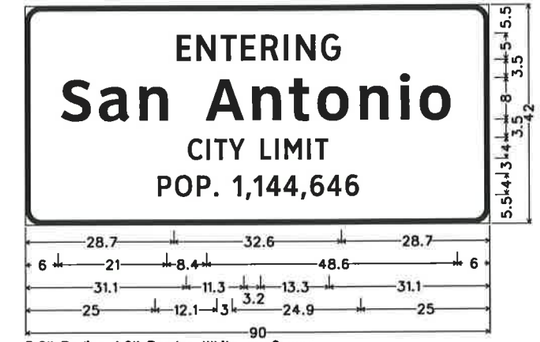

3.0" Radius, 1.0" Border, White on Green:
ENTERING - Clearview 3W: San Antonio - Clearview 5WR:
CITY LIMIT - Clearview 3W: POP. 1,144,646 - Clearview 3W:
I-2B(MOD)

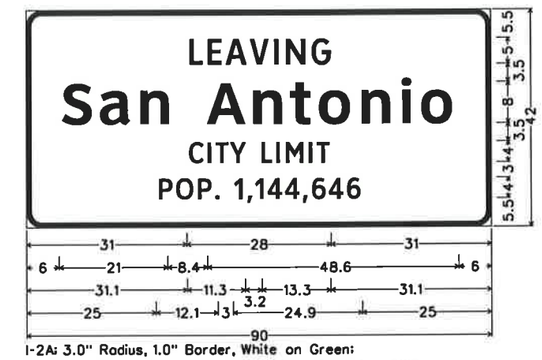

I-2A: 3.0" Radius, 1.0" Border, White on Green:
LEAVING - Clearview 3W: San Antonio - Clearview 5WR:
CITY LIMIT - Clearview 3W: POP. 1,144,646 - Clearview 3W:
I-2B(MOD)

1.5" Radius, 0.5" Border, White on Green:
Wilderness Oak - Clearview 3W: Arrow Custom - 10.0", 0 deg
D1-1

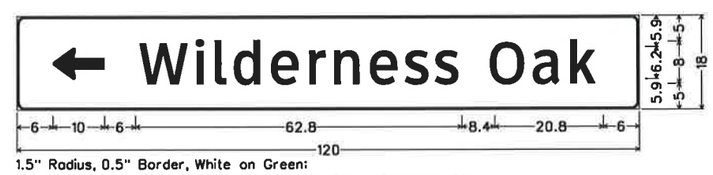

1.5" Radius, 0.5" Border, White on Green:
Arrow Custom - 10.0" 180 deg. Wilderness Oak - Clearview 3W:
D1-1

STATE OF TEXAS
JOSE A. SANCHEZ
87890
LICENSED
PROFESSIONAL ENGINEER

2007.12.07
JOSE A. SANCHEZ — DATE

NO.	REVISION	BY	DATE

CP&Y — Chiang, Patel & Yerby, Inc.

TEDSI INFRASTRUCTURE GROUP
Consulting Engineers
10999 IH 10 West • Suite 330
San Antonio, Texas 78230
(210) 858-6610

BEXAR COUNTY
PUBLIC WORKS DIVISION

F.M. 2696 (BLANCO ROAD)

SIGN PANEL DETAILS

SHEET 1 OF 1

Designed: RC	STATE	BEXAR COUNTY FILE NUMBER	PLAN SET NO.
Checked: JAS	TEXAS		73
Drawn: RC	COUNTY		OF
Checked: JAS	BEXAR		842

p:\2007\27958-1-blanco rd south\design\esj\traffic\Signing\61025SRDSK20.dgn
10:13:23 AM
12/7/2007

DISCLAIMER
The use of this standard is governed by the "Texas Engineering Practice Act". No warranty of any kind is made by TxDOT for any purpose whatsoever. TxDOT assumes no responsibility for the conversion of this standard to other formats or for incorrect results or damages resulting from its use.

REQUIREMENTS FOR E SERIES STANDARD GUIDE SIGNS

TYPICAL EXAMPLES

DEPARTMENT MATERIAL SPECIFICATIONS

PLYWOOD SIGN BLANKS	DMS-7100
ALUMINUM SIGN BLANKS	DMS-7110
FLAT SURFACE REFLECTIVE SHEETING	DMS-8300

GROUND-MOUNTED SIGNS

USAGE	COLOR	SIGN SHEETING
BACKGROUND	ALL	TYPE C (HIGH SPECIFIC INTENSITY)
LEGEND & BORDERS	WHITE	TYPE D (NON-FLUORESCENT PRISMATIC) (Type VIII or Type IX only)

GENERAL NOTES:

1. Signs to be furnished, should be as detailed elsewhere in the plans and/or as shown on sign tabulation sheet. Standard sign designs and arrow dimensions can be found in the "Standard Highway Sign Designs for Texas" (SHSD). Individual panel sizes may be adjusted during plan preparation to fit actual parent sign sizes if necessary.
2. White legends shall use the Clearview Alphabet.
   The following Clearview fonts shall be used to replace the existing Federal Highway Administration (FHWA) Standard Highway Alphabets, when not specified in the SHSD, or in the plans.
   - B CV-1W
   - C CV-2W
   - D CV-3W
   - E CV-4W
   - Emod CV-5WR
   - F CV-6W
3. Lateral spacing between letters and numerals shall conform with the SHSD, and any approved changes thereto. Lateral spacing of legends shall provide a balanced appearance when spacing is not shown.
4. White legends shall be cut-out white sheeting applied to colored background sheeting.
5. Dimensions shown for borders and corner radii are nominal. Borders may vary in width as much as 1/2 inch. Corner radii above 3 inches may vary in radius as much as 1 inch. Borders and corner radii must be of matching widths. The sign area outside the corner radius need not be trimmed or rounded.
6. Sign substrate shall be any material that meets the Department Material Specification requirements for permanent sign substrates. Exit Number Panels attached above the parent sign shall be made with the same substrate and sheeting as the parent sign.
7. Requirements for attachments are found on Standard Plan Sheet TSR(2).
8. Mounting details for roadside mounted signs are shown in the "SMD series" Standard Plan Sheets.

REQUIREMENTS FOR GREEN D AND I SERIES GUIDE SIGNS ⚠1

TYPICAL EXAMPLES

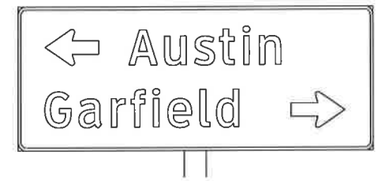

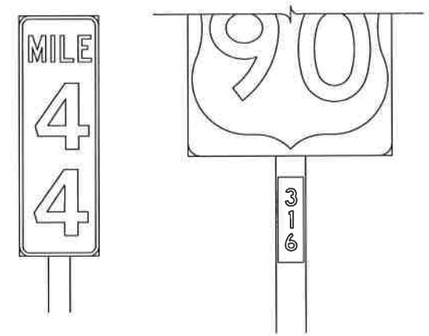

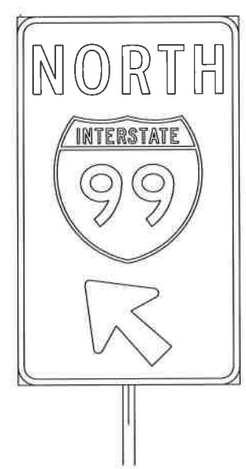

DEPARTMENT MATERIAL SPECIFICATIONS

PLYWOOD SIGN BLANKS	DMS-7100
ALUMINUM SIGN BLANKS	DMS-7110

Square Ft.	Min. Thickness
Less than 7.5	0.080
7.5 to 15	0.100
Greater than 15	0.125

FLAT SURFACE REFLECTIVE SHEETING	DMS-8300

GROUND-MOUNTED SIGNS

USAGE	COLOR	SIGN SHEETING
BACKGROUND	ALL	TYPE C (HIGH SPECIFIC INTENSITY)
LEGEND & BORDERS	WHITE	TYPE D (NON-FLUORESCENT PRISMATIC) (Type VIII or Type IX only)

GENERAL NOTES:

1. Signs to be furnished, should be as detailed elsewhere in the plans and/or as shown on sign tabulation sheet. Standard sign designs and arrow dimensions can be found in the "Standard Highway Sign Designs for Texas" (SHSD).
2. White legends shall use the Clearview Alphabet.
   The following Clearview fonts shall be used to replace the existing Federal Highway Administration (FHWA) Standard Highway Alphabets, when not specified in the SHSD, or in the plans.
   - B CV-1W
   - C CV-2W
   - D CV-3W
   - E CV-4W
   - Emod CV-5WR
   - F CV-6W
3. Lateral spacing between letters and numerals shall conform with the SHSD, and any approved changes thereto. Lateral spacing of legends shall provide a balanced appearance when spacing is not shown.
4. White legends shall be cut-out white sheeting applied to green background sheeting.
5. Dimensions shown for borders and corner radii are nominal. Borders may vary in width as much as 1/2 inch. Corner radii above 3 inches may vary in radius as much as 1 inch. Borders and corner radii must be of matching widths. The sign area outside the corner radius need not be trimmed or rounded.
6. Sign substrate shall be any material that meets the Department Material Specification requirements for permanent sign substrates.
7. Requirements for attachments are found on Standard Plan Sheet TSR(2).
8. Mounting details for roadside mounted signs are shown in the "SMD series" Standard Plan Sheets.

The Standard Highway Sign Designs for Texas (SHSD) can be found at the following website.

ftp://ftp.dot.state.tx.us/pub/txdot-info/trf/shsd/Navigate.pdf

12/03 Revision

⚠1 Added I Series to title

STANDARD PLANS
Texas Department of Transportation
Traffic Operations Division

TYPICAL SIGN REQUIREMENTS

TSR(3)-03

©TxDOT October 2003	DN: BAS	CK: GRB	DW: FDN		CK: CAL
REVISIONS 12-03	STATE DISTRICT: SAT	FEDERAL REGION: 6	FEDERAL AID PROJECT		SHEET 714
COUNTY: BEXAR	CONTROL: 2708	SECTION: 01	JOB: 022, ETC		HIGHWAY: FM2696

REQUIREMENTS FOR BLUE AND BROWN D SERIES GUIDE SIGNS

TYPICAL EXAMPLES

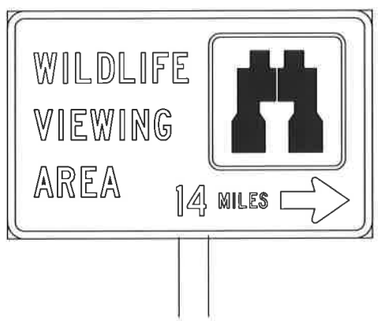

DEPARTMENT MATERIAL SPECIFICATIONS

PLYWOOD SIGN BLANKS	DMS-7100
ALUMINUM SIGN BLANKS	DMS-7110

Square Ft.	Min. Thickness
Less than 7.5	0.080
7.5 to 15	0.100
Greater than 15	0.125

FLAT SURFACE REFLECTIVE SHEETING	DMS-8300

GROUND-MOUNTED SIGNS

USAGE	COLOR	SIGN SHEETING
BACKGROUND	ALL	TYPE C (HIGH SPECIFIC INTENSITY)
LEGEND & BORDERS	WHITE	TYPE C (HIGH SPECIFIC INTENSITY)

GENERAL NOTES:

1. Signs to be furnished, should be as detailed elsewhere in the plans and/or as shown on sign tabulation sheet. Standard sign designs and arrow dimensions can be found in the "Standard Highway Sign Designs for Texas" (SHSD).
2. Blue and brown D-series signs shall use the Federal Highway Administration (FHWA) Standard Highway Alphabets (B, C, D, E, Emod or F).
3. Lateral spacing between letters and numerals shall conform with the SHSD, and any approved changes thereto. Lateral spacing of legends shall provide a balanced appearance when spacing is not shown.
4. White legends shall be applied by screening process with transparent colored ink, transparent colored overlay film to white background sheeting or cut-out white sheeting to colored background sheeting, or combination thereof.
5. Dimensions shown for borders and corner radii are nominal. Borders may vary in width as much as 1/2 inch. Corner radii above 3 inches may vary in radius as much as 1 inch. Borders and corner radii must be of matching widths. The sign area outside the corner radius need not be trimmed or rounded.
6. Sign substrate shall be any material that meets the Department Material Specification requirements for permanent sign substrates.
7. Requirements for attachments are found on Standard Plan Sheet TSR(2).
8. Mounting details for roadside mounted signs are shown in the "SMD series" Standard Plan Sheets.

REQUIREMENTS FOR INDEPENDENT MOUNTED ROUTE MARKERS

TYPICAL EXAMPLES

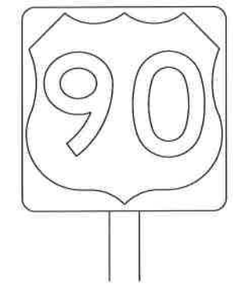

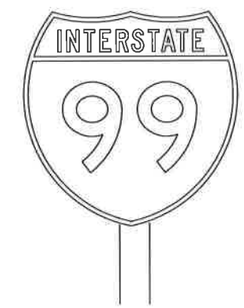

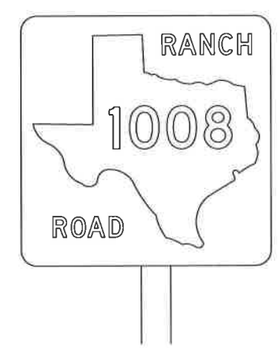

DEPARTMENT MATERIAL SPECIFICATIONS

PLYWOOD SIGN BLANKS	DMS-7100
ALUMINUM SIGN BLANKS	DMS-7110
FLAT SURFACE REFLECTIVE SHEETING	DMS-8300
VINYL NON-REFLECTIVE DECAL SHEETING	DMS-8320

USAGE	COLOR	SIGN SHEETING
BACKGROUND	ALL	TYPE C (HIGH SPECIFIC INTENSITY)
LEGEND & BORDERS	WHITE	TYPE C (HIGH SPECIFIC INTENSITY)
LEGEND & BORDERS	BLACK	VINYL NON-REFLECTIVE DECAL SHEETING

GENERAL NOTES:

1. Signs to be furnished, should be as detailed elsewhere in the plans and/or as shown on sign tabulation sheet. Standard sign designs and arrow dimensions can be found in the "Standard Highway Sign Designs for Texas" (SHSD).
2. Route Marker legends (ie. IH, US, SH and FM shields) shall use the Federal Highway Administration (FHWA) Standard Highway Alphabets (B, C, D, E, Emod or F).
3. Lateral spacing between letters and numerals shall conform with the SHSD, and any approved changes thereto. Lateral spacing of legends shall provide a balanced appearance when spacing is not shown.
4. Black legend shall be applied by screening process or cut-out vinyl non-reflective decal sheeting to white background sheeting, or combination thereof.
5. White legends shall be applied by screening process with transparent colored ink, transparent colored overlay film to white background sheeting or cut-out white sheeting to colored background sheeting, or combination thereof.
6. Independent mounted Route Marker sign blanks, for 24 inch markers shall be 0.080 inch thick, 36 inch markers shall be 0.100 inch thick, one piece sheet aluminum alloy (Type A).
7. Mounting details for roadside mounted signs are shown in the "SMD series" Standard Plan Sheets.

The Standard Highway Sign Designs for Texas (SHSD) can be found at the following website.

ftp://ftp.dot.state.tx.us/pub/txdot-info/trf/shsd/Navigate.pdf

DISCLAIMER
The use of this standard is governed by the "Texas Engineering Practice Act". No warranty of any kind is made by TxDOT for any purpose whatsoever. TxDOT assumes no responsibility for the conversion of this standard to other formats or for incorrect results or damages resulting from its use.

DISPLAYED
1 2 3 4 5 6 7 8 9 10 11 12 13 14 15 16 ACC.

STANDARD PLANS
Texas Department of Transportation
Traffic Operations Division

TYPICAL SIGN REQUIREMENTS

TSR(4)-03

© TxDOT October 2003 | DN: BAS | CK: GRB | DW: FDN | CK: CAL

REVISIONS	STATE DISTRICT	FEDERAL REGION	FEDERAL AID PROJECT	SHEET
12-03	SAT	6		715

COUNTY	CONTROL	SECTION	JOB	HIGHWAY
BEXAR	2708	01	022, ETC	FM2696

DISCLAIMER
The use of this standard is governed by the "Texas Engineering Practice Act". No warranty of any kind is made by TxDOT for any purpose whatsoever. TxDOT assumes no responsibility for the conversion of this standard to other formats or for incorrect results or damages resulting from its use.

REQUIREMENTS FOR REGULATORY SIGNS

TYPICAL EXAMPLES

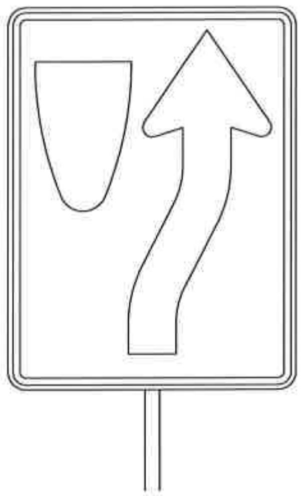

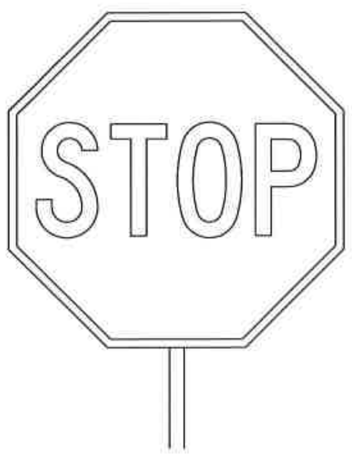

DEPARTMENT MATERIAL SPECIFICATIONS

PLYWOOD SIGN BLANKS	DMS-7100
ALUMINUM SIGN BLANKS	DMS-7110

Square Ft.	Min. Thickness
Less than 7.5	0.080
7.5 to 15	0.100
Greater than 15	0.125

FLAT SURFACE REFLECTIVE SHEETING	DMS-8300
VINYL NON-REFLECTIVE DECAL SHEETING	DMS-8320

USAGE	COLOR	SIGN SHEETING
BACKGROUND	ALL	TYPE C (HIGH SPECIFIC INTENSITY)
LEGEND & BORDERS	WHITE	TYPE C (HIGH SPECIFIC INTENSITY)
LEGEND & BORDERS	BLACK	VINYL NON-REFLECTIVE DECAL SHEETING

GENERAL NOTES:

1. Signs to be furnished, should be as detailed elsewhere in the plans and/or as shown on sign tabulation sheet. Standard sign designs and arrow dimensions can be found in the "Standard Highway Sign Designs for Texas" (SHSD).
2. Regulatory sign legends shall use the Federal Highway Administration (FHWA) Standard Highway Alphabets (B, C, D, E, Emod or F).
3. Lateral spacing between letters and numerals shall conform with the SHSD, and any approved changes thereto. Lateral spacing of legends shall provide a balanced appearance when spacing is not shown.
4. Black legend shall be applied by screening process or cut-out vinyl non-reflective decal sheeting to white background sheeting, or combination thereof.
5. White legends shall be applied by screening process with transparent colored ink, transparent colored overlay film to white background sheeting or cut-out white sheeting to colored background sheeting, or combination thereof.
6. Colored legends shall be applied by screening process with transparent colored ink, transparent colored overlay film or colored sheeting to white background sheeting, or combination thereof.
7. Sign substrate shall be any material that meets the Department Material Specification requirements for permanent sign substrates.
8. Requirements for attachments are found on Standard Plan Sheet TSR(2).
9. Mounting details for roadside mounted signs are shown in the "SMD series" Standard Plan Sheets.

REQUIREMENTS FOR WARNING SIGNS

TYPICAL EXAMPLES

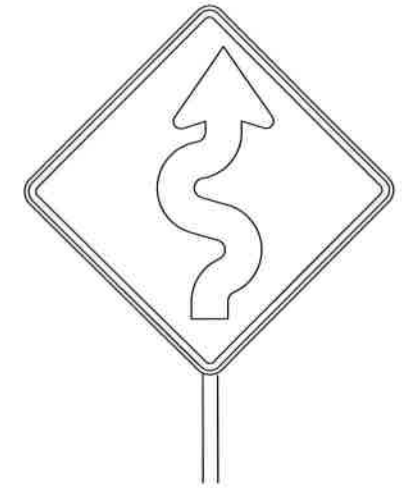

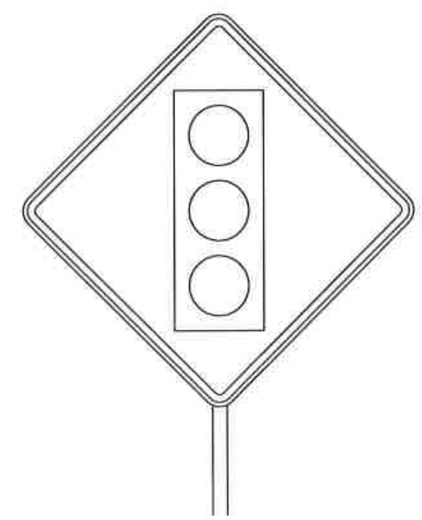

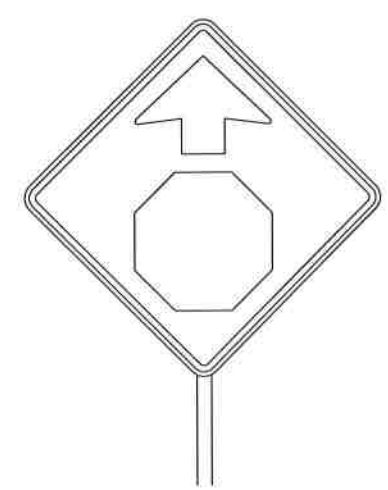

DEPARTMENT MATERIAL SPECIFICATIONS

ALUMINUM SIGN BLANKS	DMS-7110

Square Ft.	Min. Thickness
Less than 7.5	0.080
7.5 to 15	0.100
Greater than 15	0.125

FLAT SURFACE REFLECTIVE SHEETING	DMS-8300
VINYL NON-REFLECTIVE DECAL SHEETING	DMS-8320

USAGE	COLOR	SIGN SHEETING
BACKGROUND	YELLOW	TYPE E (FLUORESCENT PRISMATIC)
LEGEND & BORDERS	BLACK	VINYL NON-REFLECTIVE DECAL SHEETING
LEGEND	ALL OTHER	TYPE D (NON-FLUORESCENT PRISMATIC) (Type VIII or Type IX only)

GENERAL NOTES:

1. Signs to be furnished, should be as detailed elsewhere in the plans and/or as shown on sign tabulation sheet. Standard sign designs and arrow dimensions can be found in the "Standard Highway Sign Designs for Texas" (SHSD).
2. Warning sign legends shall use the Federal Highway Administration (FHWA) Standard Highway Alphabets (B, C, D, E, Emod or F).
3. Lateral spacing between letters and numerals shall conform with the SHSD, and any approved changes thereto. Lateral spacing of legends shall provide a balanced appearance when spacing is not shown.
4. Black legend shall be applied by screening process or cut-out vinyl non-reflective decal sheeting to background sheeting, or combination thereof.
5. Colored legends shall be applied by screening process with transparent colored ink, transparent colored overlay film or colored sheeting to white background sheeting, or combination thereof.
6. Requirements for attachments are found on Standard Plan Sheet TSR(2).
7. Mounting details for roadside mounted signs are shown in the "SMD series" Standard Plan Sheets.

The Standard Highway Sign Designs for Texas (SHSD) can be found at the following website.

ftp://ftp.dot.state.tx.us/pub/txdot-info/trf/shsd/Navigate.pdf

STANDARD PLANS
Texas Department of Transportation
Traffic Operations Division

TYPICAL SIGN REQUIREMENTS

TSR(5)-03

© TxDOT October 2003	DN: BAS	CK: GRB	DW: FDN	CK: CAL
REVISIONS 12-03	STATE DISTRICT: SAT	FEDERAL REGION: 6	FEDERAL AID PROJECT	SHEET 76
COUNTY: BEXAR	CONTROL: 2708	SECTION: 01	JOB: 022,ETC	HIGHWAY: FM2696

DISCLAIMER
The use of this standard is governed by the "Texas Engineering Practice Act". No warranty of any kind is made by TxDOT for any purpose whatsoever. TxDOT assumes no responsibility for the conversion of this standard to other formats or for incorrect results or damages resulting from its use.

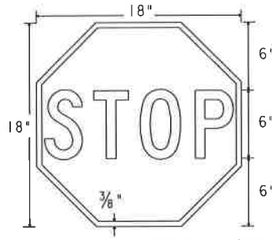

BR1-1

* reduce spacing 40%
Legend - White (refl.)
Background - Red (refl.)

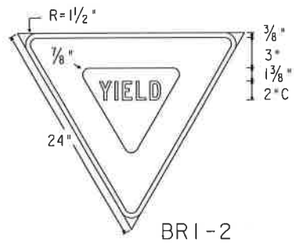

BR1-2

Legend - Red (refl.)
Background - White (refl.)

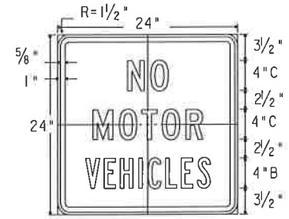

R5-3

Legend - Black
Background - White (refl.)

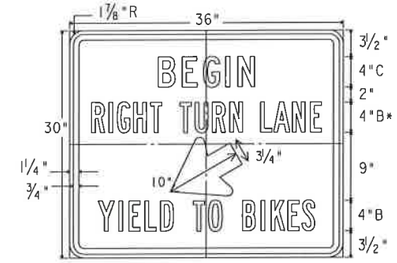

R4-4

Legend - Black
Background - White (refl.)

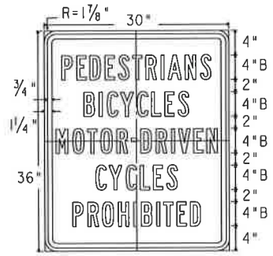

R5-10a

Legend - Black
Background - White (refl.)

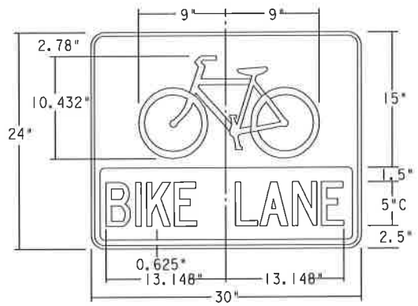

R3-17 ⊛

Legend - Black
Background - White (retro-refl.)
1.5 Radius
0.375" Border

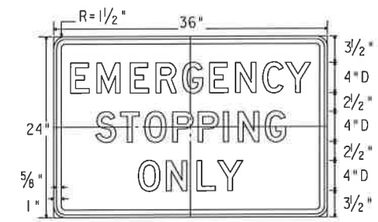

SR8-4

Legend - Black
Background - White (refl.)

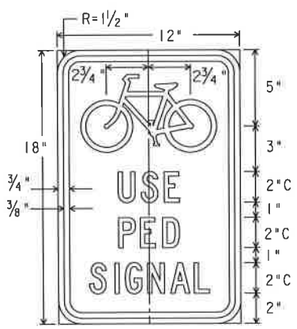

R9-5

Legend - Black
Background - White (refl.)

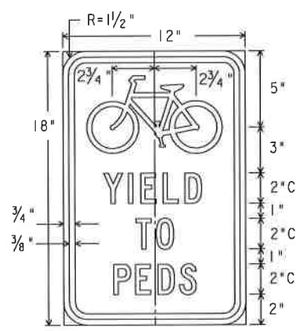

R9-6

Legend - Black
Background - White (refl.)

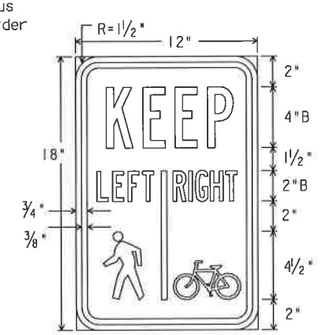

R9-7

Legend - Black
Background - White (refl.)

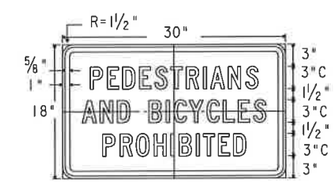

R5-10b

Legend - Black
Background - White (refl.)

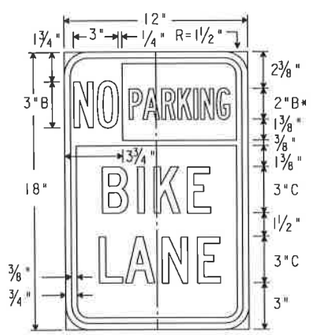

*reduce spacing 60%

R7-9

Top Left - White on Red
Legend - Red
Background - White (refl.)

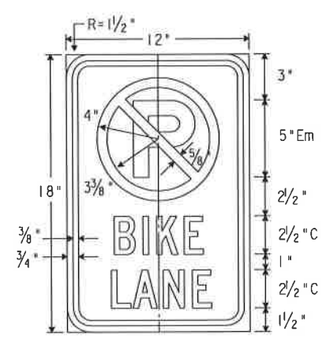

R7-9a

Legend, Circle & Dia. - Red (Refl.)
Border, Letter "P" - Black
Background - White (Refl.)

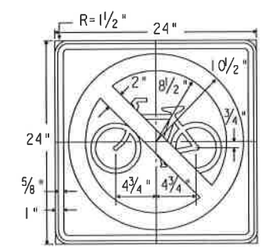

R5-6

Circle & Dia. - Red (Refl.)
Symbol - Black
Background - White (Refl.)

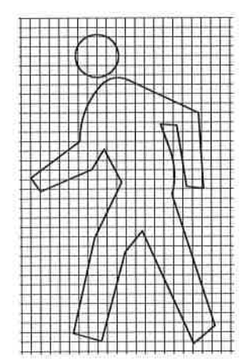

SPECIFICATION REFERENCE TABLE	
MATERIALS AND TESTS DIVISION SPECIFICATIONS	
PLYWOOD SIGN BLANKS	D-9-7100
ALUMINUM SIGN BLANKS	D-9-7110
FLAT SURFACE REFLECTIVE SHEETING, TYPE C (HIGH SPECIFIC INTENSITY)	D-9-8300
VINYL NON-REFLECTIVE DECAL SHEETING	D-9-8320

COLOR	USAGE	REFLECTIVE SHEETING OR OTHER MATERIAL
RED	BACKGROUND	TYPE C (HIGH SPECIFIC INTENSITY)
GREEN	BACKGROUND	TYPE C (HIGH SPECIFIC INTENSITY)
WHITE	BACKGROUND	TYPE C (HIGH SPECIFIC INTENSITY)
YELLOW	BACKGROUND	TYPE C (HIGH SPECIFIC INTENSITY)
BLACK	LEGEND/BORDERS	VINYL NON-REFLECTIVE DECAL SHEETING
WHITE	LEGEND/BORDERS	TYPE C (HIGH SPECIFIC INTENSITY)

GENERAL NOTES:

The alphabets and lateral spacing between letters and numerals shall conform with the Texas "Manual on Uniform Traffic Control Devices for Streets and Highways", latest edition, and any approved changes thereto. Lateral spacing of text shall provide a balanced appearance. All materials shall conform to Department Specifications.

Sign blanks shall be fabricated from 0.08 inch thick aluminum alloy (Type A) or 5/8 inch plywood as noted elsewhere in the plans. Signs shall be mounted in accordance with Standard SMD (series).

For red background signs, legend shall be applied by screening process, cut-out white reflective sheeting applied to colored background or combination thereof. Background shall be reflective sheeting (Type C).

For white background signs, black legend shall be applied by screening process, cut-out vinyl non-reflective decal sheeting or combination thereof. Red, green or other colored legends, symbols, and/or borders shall be applied by screening process with transparent ink, cut-out reflective sheeting applied to white background or combination thereof. Background shall be reflective sheeting (Type C).

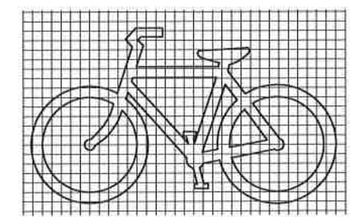

STATE OF TEXAS
JOSE A. SANCHEZ
87890
LICENSED
PROFESSIONAL ENGINEER

JOSE A. SANCHEZ — DATE 2007.12.07

THIS SEAL SUBSTANTIATES THE ITEMS IDENTIFIED WITH AN ⊛ ONLY AND DOES NOT CONFIRM THE DESIGN STANDARDS (BY OTHERS) PRESENTED HEREON

4/01 Revision

All white reflec. sheeting on ground mount signs shall be High Specific Intensity. Notes have been modified to reflect change.

STANDARD PLANS
Texas Department of Transportation
Traffic Operations Division

BICYCLE LANE REGULATORY SIGNS

BL(RS)-01 (MOD)

©TxDOT January 1997 DN: MT | CK: PD | DW: FDN | CK: CAL

REVISIONS	STATE DISTRICT	FEDERAL REGION	FEDERAL AID PROJECT				SHEET
4-01	SAT	6					7/17
	COUNTY		CONTROL	SECTION	JOB		HIGHWAY
	BEXAR		2708	01	022, ETC		FM2696

DN: CK: DW: CK:
DATE: ACC: FILE:
LEVELS

DISCLAIMER
The use of this standard is governed by the "Texas Engineering Practice Act". No warranty of any kind is made by TxDOT for any purpose whatsoever. TxDOT assumes no responsibility for the conversion of this standard to other formats or for incorrect results or damages resulting from its use.

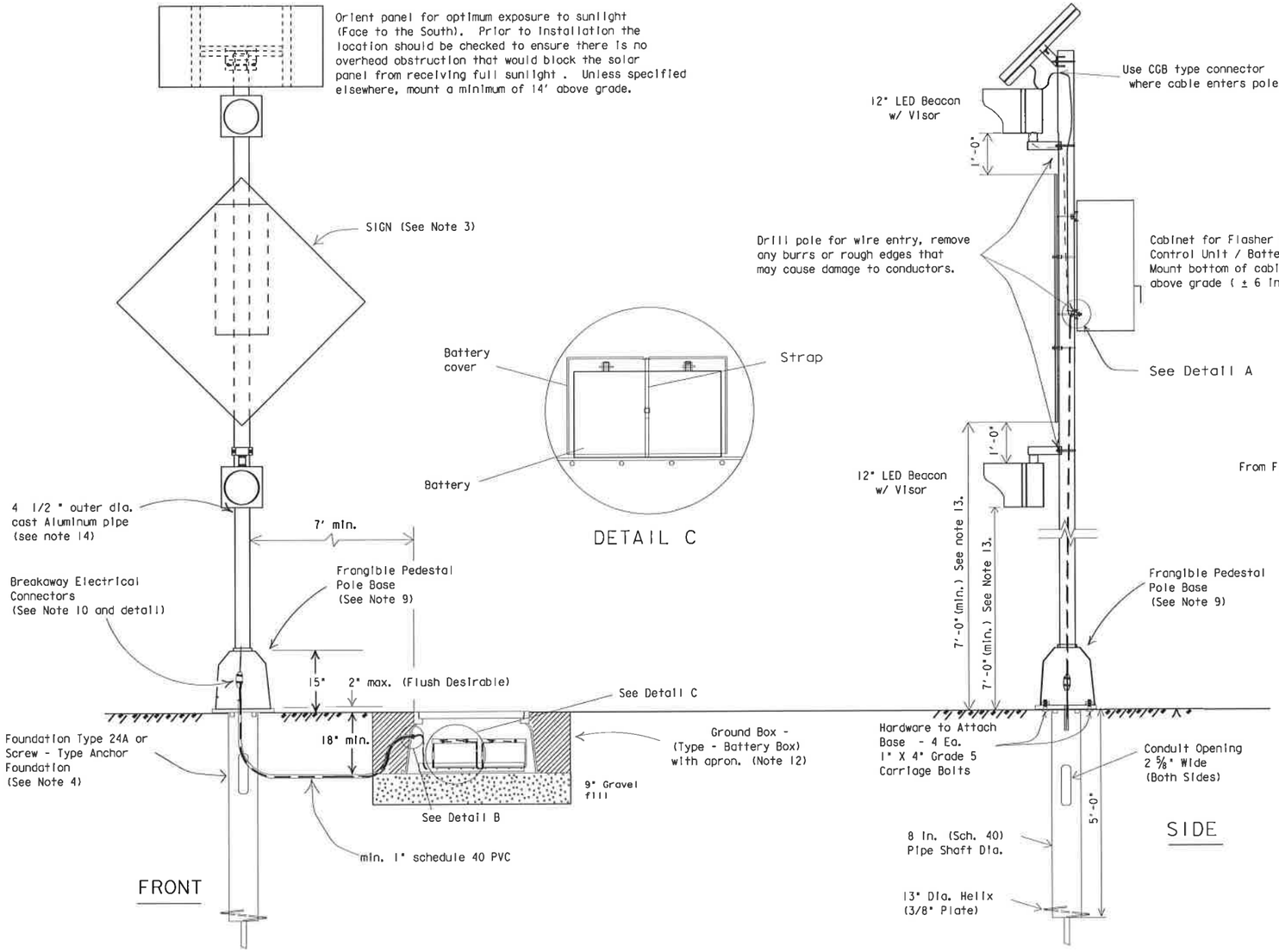

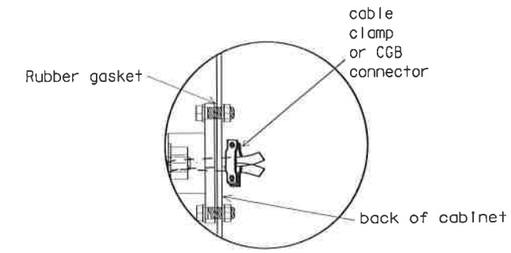

DETAIL A

Pull conductors to remove slack in run between cabinet and ground box. Clamp cable at conduit end in ground box and in cabinet at entry as shown.

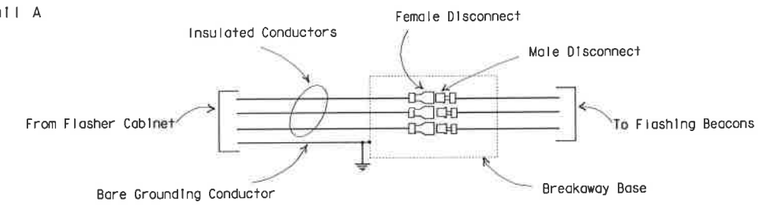

BREAKAWAY ELECTRICAL CONNECTORS

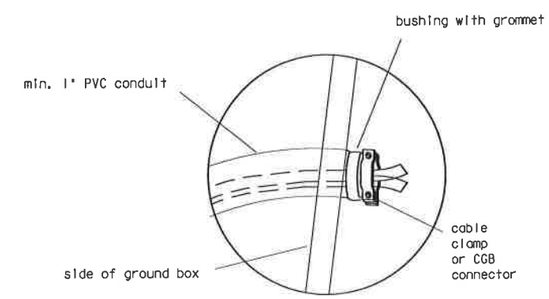

DETAIL B

NOTES:

1. Details show a typical warning sign with two flashing beacon heads, other arrangements are possible. When only one beacon is required, install the upper beacon.
2. See Item 685, "Roadside Flashing Beacon Assemblies" for further requirements.
3. See SMD standard sheets for lateral and vertical clearances and sign mounting details. Install signs as shown on the sign layout sheets.
4. Use either a Screw-In Type Anchor Foundation or 24 in. Drill Shaft Foundation as shown elsewhere in the plans. When plans require 24 in. Drill Shaft Foundation, see standard sheet TS-FD. Install the Screw-In Type Anchor Foundation as shown. On slope, install one edge at ground level.
5. When used, provide one of the following Screw-In Type Anchor foundations:
   A. B. Chance Co., model C11242NG4VP; Component Products, Inc., model CPI-SLSF-5TX; Pelco Products, Inc., models PB-5359, PB-5360 or PB 5375; or Approved equal.
6. Use materials specifically designed for attaching cabinets, beacon heads, solar panels, etc., to poles.
7. Install beacon heads as shown here, as shown elsewhere on the plans, or as directed. Use hardware specifically design for mounting beacon heads on poles.
8. Conduit in foundation and within 6 in. of foundation is subsidiary to the item 685, "Roadside Flashing Beacon Assemblies."
9. Per manufacturer's recommendations, engage all threads on the pedestal pole base and pipe unless the pipe is fully seated into base. In high winds, use a pole and base collar assembly to add strength and prevent loosening on connection.
10. Provide non-fused watertight breakaway electrical connectors for breakaway poles. (Bussmann HET, Littelfuse LET, Ferraz-Shawmut FEBN, or approved equal).
11. Install the batteries in a Battery Box. Place the batteries on a 3/16 " thick plastic sheet and connect together. Place a plastic cover (Battery Bell Jar) over the top of each battery and secure the battery bell jar to the battery with a strap. The batteries, bell jars, straps and 3/16 " plastic sheet are subsidiary to the item 685, "Roadside Flashing Beacon Assemblies." When required, install batteries in the flasher cabinet. Provide the number of batteries as required on the plans. Wire batteries according to manufacturers recommendations.
12. See standard sheet ED (13) for battery box details.
13. Provide clearance as shown above the sidewalk or pavement grade at the edge of the road. When a bottom beacon is not used, mount the sign at least 7 ft. above the sidewalk or pavement grade at the edge of the road.
14. Unless otherwise shown on the plans, pole shaft shall be one piece, schedule 40 Aluminum pipe, ASTM B429 or B221 (Alloy 6061-T6 only). Aluminum conduit will not develop the necessary strength and will not be allowed.

DISPLAYED	ACC:
1 2 3 4 5 6 7 8 9 10 11 12 13 14 15 16	
A	19 10 11 12 13 14 15 16
B	20 21 22 23 24 25 26 27
C	28 29 30 31 32 33 34 35
D	36 37 38 39 40 41 42 43 44 45 46 47 48
E	49 50 51 52 53 54 55 56 57 58 59 60 61 62 63

STANDARD PLANS
Texas Department of Transportation
Traffic Operations Division

SOLAR POWERED ROADSIDE FLASHING BEACON ASSEMBLY DETAILS

SPRFBA(1)-04

©TxDOT May 2003	DN: HW	CK: BV	DN: FDN	CK: CAL	
REVISIONS 12-04	STATE DIVISION SAT	FEDERAL REGION 6	FEDERAL AID PROJECT		SHEET 718
	COUNTY BEXAR	CONTROL 2708	SECTION 01	JOB 022,ETC	HIGHWAY FM2696

DESCRIPTIVE CODE		TALLY	TOTAL
0644 2001 INS SM RD SN SUP&AM TY 10BWG(1)SA(P)	EA		
0644 2002 INS SM RD SN SUP&AM TY 10BWG(1)SA(P-BM)	EA		
0644 2003 INS SM RD SN SUP&AM TY 10BWG(1)SA(P-EXAL)	EA		
0644 2004 INS SM RD SN SUP&AM TY 10BWG(1)SA(T)	EA		
0644 2005 INS SM RD SN SUP&AM TY 10BWG(1)SA(T-2EXT)	EA		
0644 2006 INS SM RD SN SUP&AM TY 10BWG(1)SA(U)	EA		
0644 2007 INS SM RD SN SUP&AM TY 10BWG(1)SB(P)	EA		
0644 2008 INS SM RD SN SUP&AM TY 10BWG(1)SB(P-BM)	EA		
0644 2009 INS SM RD SN SUP&AM TY 10BWG(1)SB(P-EXAL)	EA		
0644 2010 INS SM RD SN SUP&AM TY 10BWG(1)SB(T)	EA		
0644 2011 INS SM RD SN SUP&AM TY 10BWG(1)SB(T-2EXT)	EA		
0644 2012 INS SM RD SN SUP&AM TY 10BWG(1)SB(U)	EA		
0644 2013 INS SM RD SN SUP&AM TY 10BWG(2)SA(P)	EA		
0644 2014 INS SM RD SN SUP&AM TY 10BWG(2)SA(T-2EXT)	EA		
0644 2015 INS SM RD SN SUP&AM TY 10BWG(2)SB(P)	EA		
0644 2016 INS SM RD SN SUP&AM TY 10BWG(2)SB(T-2EXT)	EA		
0644 2017 INS SM RD SN SUP&AM TY FRP(1)UA(P)	EA		
0644 2018 INS SM RD SN SUP&AM TY FRP(1)UB(P)	EA		
0644 2019 INS SM RD SN SUP&AM TY FRP(2)UA(P)	EA		
0644 2020 INS SM RD SN SUP&AM TY FRP(2)UB(P)	EA		
0644 2021 INS SM RD SN SUP&AM TY G	EA		
0644 2022 INS SM RD SN SUP&AM TY S80(1)SA(P)	EA		133
0644 2023 INS SM RD SN SUP&AM TY S80(1)SA(P-BM)	EA		
0644 2024 INS SM RD SN SUP&AM TY S80(1)SA(P-EXAL)	EA		
0644 2025 INS SM RD SN SUP&AM TY S80(1)SA(T)	EA		6
0644 2026 INS SM RD SN SUP&AM TY S80(1)SA(T-2EXT)	EA		2
0644 2027 INS SM RD SN SUP&AM TY S80(1)SA(U)	EA		2
0644 2028 INS SM RD SN SUP&AM TY S80(1)SA(U-1EXT)	EA		
0644 2029 INS SM RD SN SUP&AM TY S80(1)SA(U-2EXT)	EA		
0644 2030 INS SM RD SN SUP&AM TY S80(1)SA(U-BM)	EA		
0644 2031 INS SM RD SN SUP&AM TY S80(1)SA(U-WC)	EA		4
0644 2032 INS SM RD SN SUP&AM TY S80(1)SB(P)	EA		7
0644 2033 INS SM RD SN SUP&AM TY S80(1)SB(P-BM)	EA		
0644 2034 INS SM RD SN SUP&AM TY S80(1)SB(P-EXAL)	EA		
0644 2035 INS SM RD SN SUP&AM TY S80(1)SB(T)	EA		
0644 2036 INS SM RD SN SUP&AM TY S80(1)SB(T-2EXT)	EA		
0644 2037 INS SM RD SN SUP&AM TY S80(1)SB(U)	EA		
0644 2038 INS SM RD SN SUP&AM TY S80(1)SB(U-1EXT)	EA		
0644 2039 INS SM RD SN SUP&AM TY S80(1)SB(U-2EXT)	EA		
0644 2040 INS SM RD SN SUP&AM TY S80(1)SB(U-BM)	EA		
0644 2041 INS SM RD SN SUP&AM TY S80(1)SB(U-WC)	EA		
0644 2042 INS SM RD SN SUP&AM TY S80(2)SA(P)	EA		
0644 2043 INS SM RD SN SUP&AM TY S80(2)SA(P-EXAL)	EA		
0644 2044 INS SM RD SN SUP&AM TY S80(2)SA(T-2EXT)	EA		
0644 2045 INS SM RD SN SUP&AM TY S80(2)SB(P)	EA		
0644 2046 INS SM RD SN SUP&AM TY S80(2)SB(P-EXAL)	EA		
0644 2047 INS SM RD SN SUP&AM TY S80(2)SB(T-2EXT)	EA		

DESCRIPTIVE CODE		TALLY	TOTAL
0644 2048 INS SM RD SN SUP&AM TY TWT(1)UA(P)	EA		
0644 2049 INS SM RD SN SUP&AM TY TWT(1)UA(T)	EA		
0644 2050 INS SM RD SN SUP&AM TY TWT(1)UA(T-2EXT)	EA		
0644 2051 INS SM RD SN SUP&AM TY TWT(1)UB(P)	EA		
0644 2052 INS SM RD SN SUP&AM TY TWT(1)UB(T)	EA		
0644 2053 INS SM RD SN SUP&AM TY TWT(1)WA(P)	EA		
0644 2054 INS SM RD SN SUP&AM TY TWT(1)WA(T)	EA		
0644 2055 INS SM RD SN SUP&AM TY TWT(1)WA(T-2EXT)	EA		
0644 2056 RELOCATE SM RD SN SUP&AM TY 10BWG	EA		
0644 2057 RELOCATE SM RD SN SUP&AM TY FRP	EA		
0644 2058 RELOCATE SM RD SN SUP&AM TY S80	EA		
0644 2059 RELOCATE SM RD SN SUP&AM TY TWT	EA		
0644 2060 REMOVE SM RD SN SUP&AM	EA		63
0644 2061 RELOCATE SM RD SN SUP&AM (HIST MRKR)	EA		
0644 2062 INS SM RD SN SUP&AM TY 10BWG(1)SA(U-WC)	EA		
0644 2063 INS SM RD SN SUP&AM (RAIL MOUNT)	EA		
0644 2064 INS SM RD SN SUP&AM TY S80(1)SA(U-EXAL)	EA		
0644 2065 RELOCATE SM RD SN SUP&AM TY TEMP	EA		
0644 2068 INS SM RD SN SUP&AM TY TWT(1)WA(P-EXAL)	EA		
0644 2069 INS SM RD SN SUP&AM TY 10BWG(1)SA(U-EXAL)	EA		
0644 2070 INS SM RD SN SUP&AM TY 10BWG(2)SA(T)	EA		
0644 2071 INS SM RD SN SUP&AM TY 10BWG(2)SB(T)	EA		
0644 2072 INS SM RD SN SUP&AM TY S80(2)SA(T)	EA		
0644 2073 INS SM RD SN SUP&AM TY S80(2)SB(T)	EA		
0644 2074 INS SM RD SN SUP&AM TY S80(2)SA(P-BM)	EA		
0644 2075 RELOCATE SM RD SN SUP&AM (RAIL MOUNT)	EA		
0644 2077 REMOVE SM RD SN SUP&AM (SIGN ONLY)	EA		
0644 2078 INS SM RD SN SP&AM TY 10BWG(1)SA(T-EXAL)	EA		
0644 2079 INS SM RD SN SUP&AM TY S80(1)SA(T-EXAL)	EA		

DISCLAIMER
The use of this standard is governed by the "Texas Engineering Practice Act". No warranty of any kind is made by TxDOT for any purpose whatsoever. TxDOT assumes no responsibility for the conversion of this standard to other formats or for incorrect results or damages resulting from its use.

DISPLAYED
1 2 3 4 5 6 7 8 9 0 1 2 3 4 5 6
1 7 8 9 0 2 2 2 2 2 2 2 2 2 3 3 1 2
3 3 4 3 5 6 3 7 8 9 3 4 1 4 2 4 3 4 4 5 4 5 6 7 4 8
4 9 0 5 6 2 5 3 5 4 5 5 6 5 7 5 8 5 9 6 0 6 1 6 2 6 3

ACC:

STATE OF TEXAS
JOSE A. SANCHEZ
87890
LICENSED
PROFESSIONAL ENGINEER

JOSE A. SANCHEZ

2007.12.07
DATE

STANDARD PLANS
Texas Department of Transportation
Traffic Operations Division

SIGN MOUNTING DETAILS SMALL ROADSIDE SIGNS DESCRIPTIVE CODES

SMD(CODES)-02(MOD)

© TxDOT July 2002 | DN: - BAS | CK: - GRB | DW: - FDN | CK: - CAL

REVISIONS	STATE DISTRICT	FEDERAL REGION	FEDERAL AID PROJECT	SHEET
	SAT	6		719

COUNTY	CONTROL	SECTION	JOB	HIGHWAY
BEXAR	2708	01	022, ETC	FM2696

DISCLAIMER
The use of this standard is governed by the "Texas Engineering Practice Act". No warranty of any kind is made by TxDOT for any purpose whatsoever. TxDOT assumes no responsibility for the conversion of this standard to other formats or for incorrect results or damages resulting from its use.

SIGN SUPPORT DESCRIPTIVE CODES

(Descriptive Codes correspond to project estimate and quantities sheets)

SM RD SGN ASSM TY XXXXX(X)XX(X-XXXX)

Post Type

FRP = Fiberglass Reinforced Plastic Pipe (see SMD(FRP))
TWT = Thin-Walled Tubing (see SMD(TWT))
10BWG = 10 BWG Tubing (see SMD(SLIP-1) to SMD(SLIP-3))
S80 = Schedule 80 Pipe (see SMD(SLIP-1) to SMD(SLIP-3))

Number of Posts (1 or 2)

Anchor Type

UA = Universal Anchor - Concreted (see SMD(FRP) and SMD(TWT))
UB = Universal Anchor - Bolted down (see SMD(FRP) and SMD(TWT))
WA = Wedge Anchor - (see SMD(TWT))
SA = Slipbase - Concreted (see SMD(SLIP-1) to SMD(SLIP-3))
SB = Slipbase - Bolted Down (see SMD(SLIP-1) to SMD(SLIP-3))

Sign Mounting Designation

P = Prefab. "Plain" (see SMD(SLIP-1) to (3), SMD(TWT), SMD(FRP))
T = Prefab. "T" (see SMD(SLIP-1) to (3), SMD(TWT))
U = Prefab. "U" (see SMD(SLIP-1) to (3))
IF REQUIRED
IEXT or 2EXT = Number of Extensions (see SMD(SLIP-1) to (3), SMD(TWT))
BM = Extruded Wind Beam (see SMD(SLIP-1) to (3))
WC = 1.12 #/ft Wing Channel (see SMD(SLIP-1) to (3))
EXAL = Extruded Aluminum sign panels (see SMD(SLIP-3))

REQUIRED CLEARANCE FOR BREAKAWAY SUPPORT

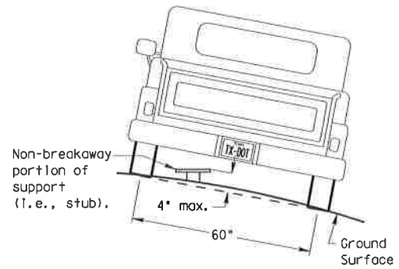

To avoid vehicle undercarriage snagging, any substantial remains of a breakaway support, when it is broken away, should not project more than 4 inches above a 60-inch chord (i.e., typical space between wheel paths).

No more than 2 sign posts should be located within a 7 ft. circle.

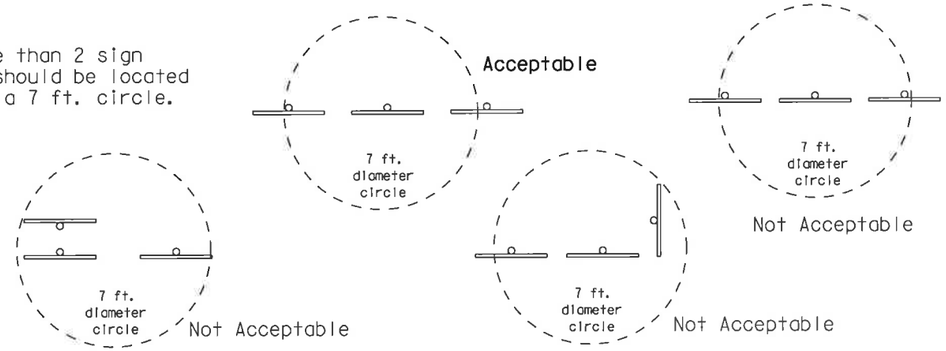

SIGN LOCATION

PAVED SHOULDERS

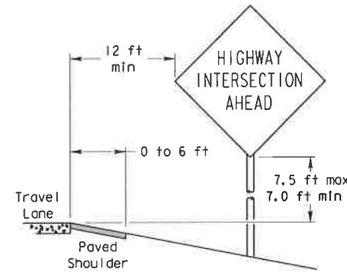

LESS THAN 6 FT. WIDE

When the shoulder is 6 ft. or less in width, the sign must be placed at least 12 ft. from the edge of the travel lane.

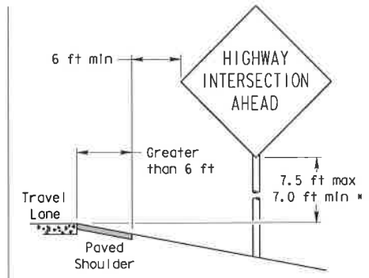

GREATER THAN 6 FT. WIDE

When the shoulder is greater than 6 ft in width, the sign must be placed at least 6 ft. from the edge of the shoulder.

T-INTERSECTION

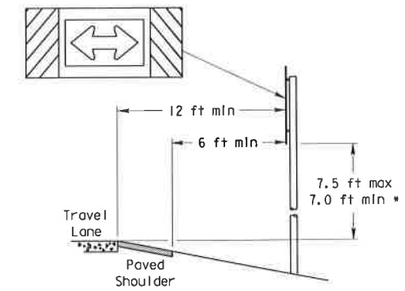

When this sign is needed at the end of a two-lane, two way roadway, the right edge of the sign should be in line with the centerline of the roadway. Place as close to ROW as practical.

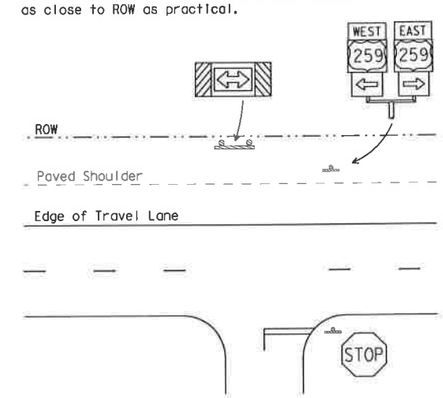

BEHIND BARRIER

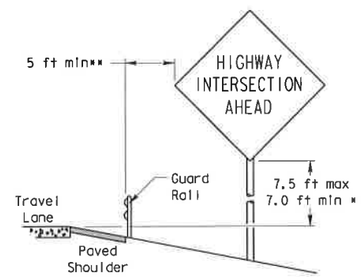

BEHIND GUARDRAIL

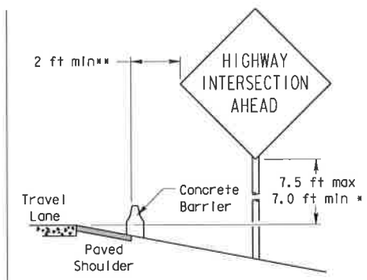

BEHIND CONCRETE BARRIER

**Sign clearance based on distance required for proper guard rail or concrete barrier performance.

* Signs shall be mounted using the following condition that results in the greatest sign elevation:

(1) a minimum of 7 to a maximum of 7.5 feet above the edge of the travel lane or

(2) a minimum of 7 to a maximum of 7.5 feet above the grade at the base of the support when sign is installed on the backslope.

The maximum values may be increased when directed by the Engineer.

See the Traffic Operations Division website for detailed drawings of sign clamps, Texas Universal Triangular Slipbase System components and Wedge Anchor System components.

The website address is:
ftp://ftp.dot.state.tx.us/pub/txdot-info/cmd/cserve/standard/traffic/slip.pdf

TYPICAL SIGN ATTACHMENT DETAIL

Single Signs

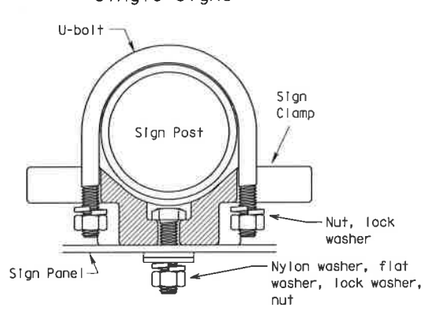

Bolts used to mount sign panels to the clamp are 5/16-18 UNC galvanized square head with nut, nylon washer, flat washer and lock washer. The bolt length is 1 inch for aluminum and 1 3/4 inch for plywood signs.

When two sign clamps are used to mount signs back-to-back, use a 5/16-18 UNC galvanized hex head per ASTM A307 with nut and helical-spring lock washer. The approximate bolt lengths for various post sizes and sign clamp types are given in the table at right. The bolt length may need to be adjusted depending upon field conditions.

Sign clamps may be either the specific size clamp or the universal clamp.

Back-to-Back Signs

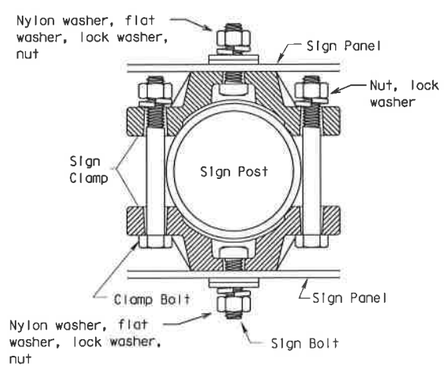

Pipe Diameter	Approximate Bolt Length	
	Specific Clamp	Universal Clamp
2" nominal	3"	3 or 3 1/2"
2 1/2" nominal	3 or 3 1/2"	3 1/2 or 4"
3" nominal	3 1/2 or 4"	4 1/2"

SIGNS WITH PLAQUES

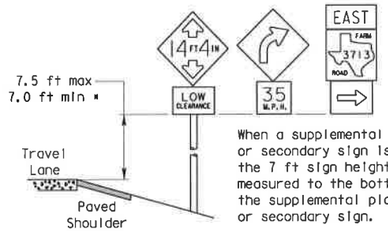

When a supplemental plaque or secondary sign is used, the 7 ft sign height is measured to the bottom of the supplemental plaque or secondary sign.

MEDIANS

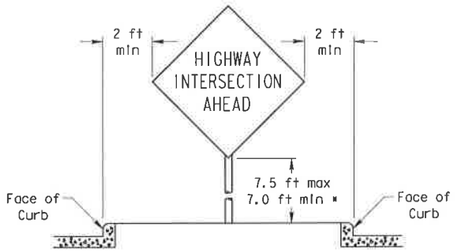

RESTRICTED RIGHT-OF-WAY

(When 6 ft min. is not possible.)

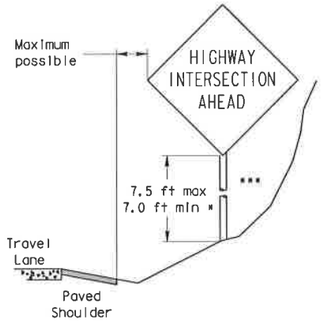

Right-of-way restrictions may be created by rocks, water, vegetation, forest, buildings, a narrow island, or other factors.

In situations where a lateral restriction prevents the minimum horizontal clearance from the edge of the travel lane, signs should be placed as far from the travel lane as practical.

*** Post may be shorter if protected by guardrail or if Engineer determines the post could not be hit due to extreme slope.

STANDARD PLANS
TEXAS DEPARTMENT OF TRANSPORTATION
Traffic Operations Division

SIGN MOUNTING DETAILS SMALL ROADSIDE SIGNS GENERAL NOTES & DETAILS

SMD(GEN)-02

©TxDOT July 2002	DN: BAS	CK: GRB	DW: FDN	CK: CAL	
REVISIONS	STATE DISTRICT	FISCAL REGION	FEDERAL AID PROJECT		SHEET
	SAT	6			720
COUNTY		CONTROL	SECTION	JOB	HIGHWAY
BEXAR		2708	01	022, ETC	FM2696

SPLAYED	ACC:
1 2 3 4 5	1 2 3 4 5 6
6 7 8 9 10 11 12 13 14 15 16 17 18 19 20 21 22 23 24	7 8 9 10 11 12 13 14 15 16 17 18
25 26 27 28 29 30 31 32 33 34 35 36 37 38 39 40 41 42 43 44 45 46 47 48	

Texas Universal Triangular Slipbase System

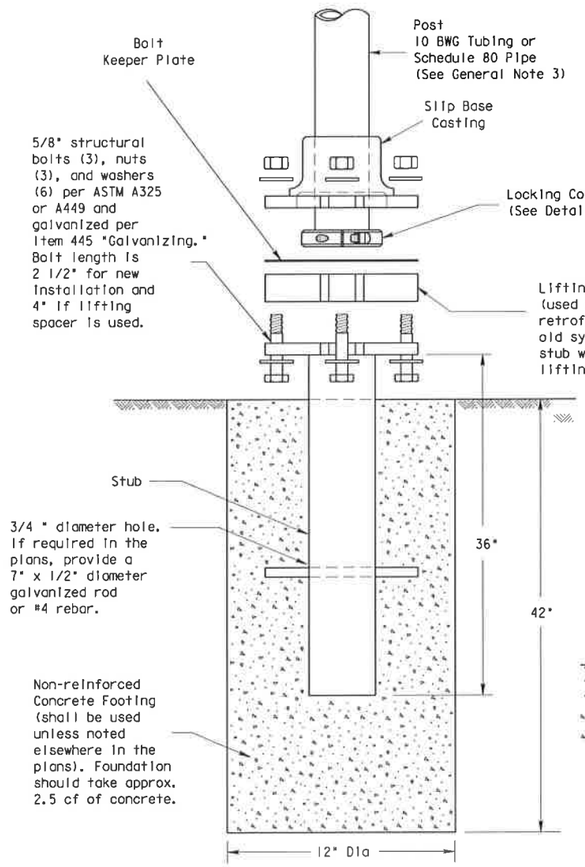

SM RD SGN ASSM TY XXXXX(X)SA(X-XXXX)

Concrete anchor consists of 5/8" diameter stud bolt with UNC series bolt threads on the upper end. Heavy hex nut per ASTM A563, and hardened washer per ASTM F436. The stud bolt shall have minimum yield and ultimate tensile strengths of 50 and 75 KSI, respectively. Nuts, bolts and washers shall be galvanized per Item 445, "Galvanizing." Top of bolt shall extend at least flush with top of the nut when installed. The anchor, when installed in 4000 psi normal-weight concrete with a 5 1/2" minimum embedment, shall have a minimum allowable tension and shear of 3900 and 3100 psi, respectively. Adhesive type anchors shall have stud bolts installed with Type III epoxy per DMS-6100, "Epoxies and Adhesives." Adhesive anchors may be loaded after adequate epoxy cure time, per the manufacturer's recommendations.

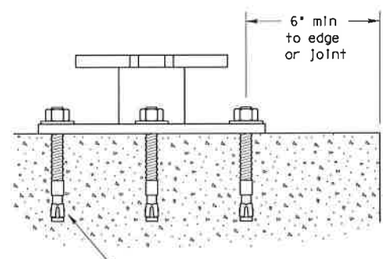

SM RD SGN ASSM TY XXXXX(X)SB(X-XXXX)

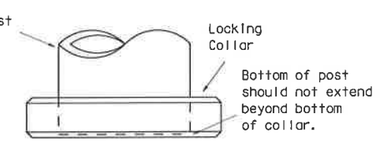

Detail E

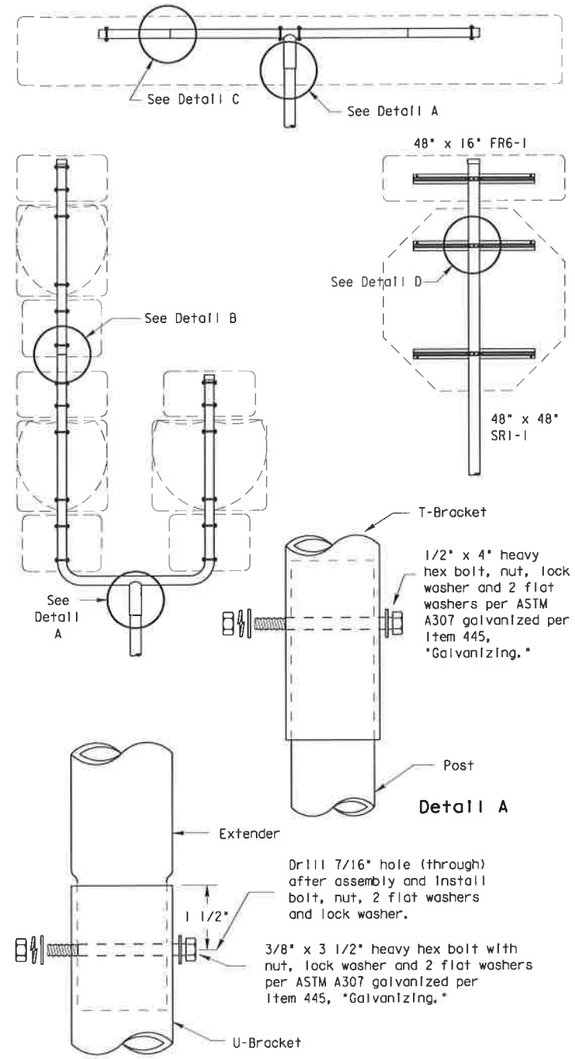

Detail A

Detail B

ROLL PIN (Optional)

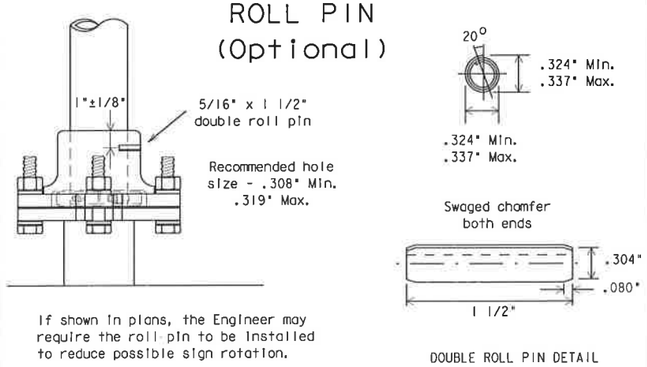

If shown in plans, the Engineer may require the roll pin to be installed to reduce possible sign rotation.

DOUBLE ROLL PIN DETAIL

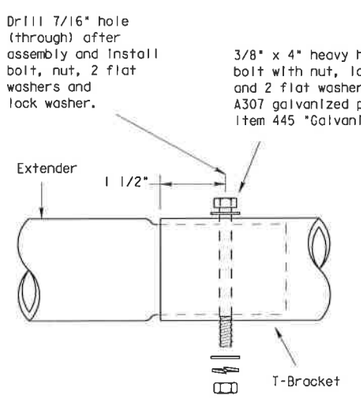

Detail C

Splices shall only be allowed behind the sign substrate.

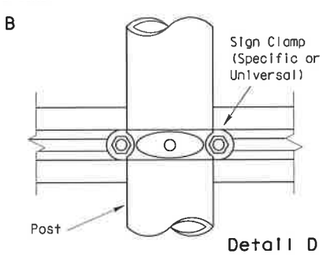

Detail D

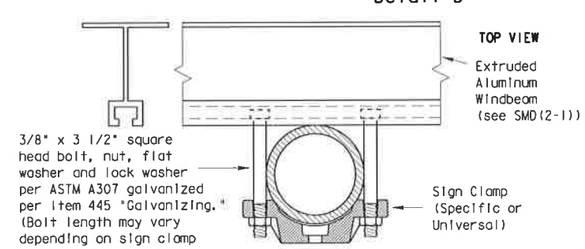

GENERAL NOTES:

1. Finished components, except posts (10 BWG Tubing and Schedule 80 Pipe) and clamps, shall be permanently marked to indicate manufacturer. Method, design, and location of marking are subject to approval of the TxDOT Traffic Standards Engineer.
2. Except for posts (10 BWG Tubing and Schedule 80 Pipe), clamps, nuts and bolts, all components shall be prequalified. A list of prequalified vendors may be obtained from the TxDOT Traffic Standards Engineer, or the Traffic Operations Division website. The website address is: http://www.dot.state.tx.us/insdtdot/orgchart/trf/trfeng/
3. Material used as post with this system shall conform to the following specifications:

   10 BWG Tubing (2.875" outside diameter)
   - 0.134" nominal wall thickness
   - Seamless or electric-resistance welded steel tubing or pipe
   - Steel shall be HSLAS Gr 55 per ASTM A1011 or ASTM A1008
   - Other steels may be used if they meet the following:
     - 55,000 PSI minimum yield strength
     - 70,000 PSI minimum tensile strength
     - 20% minimum elongation in 2"
   - Wall thickness (uncoated) shall be within the range of 0.122" to 0.138"
   - Outside diameter (uncoated) shall be within the range of 2.867" to 2.883"
   - Galvanization per ASTM A123 or ASTM A653 G210. For precoated steel tubing (ASTM A653), recoat tube outside diameter weld seam by metallizing with zinc wire per ASTM B833.

   Schedule 80 Pipe (2.875" outside diameter)
   - 0.276" nominal wall thickness
   - Steel tubing per ASTM A500 Gr C
   - Other seamless or electric-resistance welded steel tubing or pipe with equivalent outside diameter and wall thickness may be used if they meet the following:
     - 46,000 PSI minimum yield strength
     - 62,000 PSI minimum tensile strength
     - 21% minimum elongation in 2"
   - Wall thickness (uncoated) shall be within the range of 0.248" to 0.304"
   - Outside diameter (uncoated) shall be within the range of 2.855" to 2.895"
   - Galvanization per ASTM A123
4. See the Traffic Operations Division website for detailed drawings of sign clamps and Texas Universal Triangular Slipbase System components. The website address is:
   ftp://ftp.dot.state.tx.us/pub/txdot-info/cmd/cserve/standard/traffic/slip.pdf
5. Sign supports shall not be spliced except where shown. Sign support posts shall not be spliced.

ASSEMBLY PROCEDURE

Foundation

1. Prepare 12-inch diameter by 42-inch deep hole. If solid rock is encountered, the depth of the foundation may be reduced such that it is embedded a minimum of 18 inches into the solid rock.
2. Thoroughly wet and mix concrete in a container. Place concrete into hole until it is approximately flush with the ground.
3. Push the pipe end of the slip base stub into the center of the concrete. Rotate the stub back and forth while pushing it down into the concrete to assure good contact between the concrete and stub. Continue to work the stub into the concrete until it is between 2 to 4 inches above the ground. The upper value assures that an impacting vehicle should not snag on the footing. The lower value provides clearance for assembly.
4. Plumb the stub by using a torpedo level on the slip plate. Allow concrete adequate time to set.

Support

1. Cut support so that the bottom of the sign will be 7 to 7.5 feet above the edge of the travelway (i.e., edge of the closest lane) when slip plate is below the edge of pavement or 7 to 7.5 feet above slip plate when the slip plate is above the edge of the travelway. The cut shall be plumb and straight.
2. Attach sign to support using connections shown. When multiple signs are installed on the same support, ensure the minimum clearance between each sign is maintained. See SMD(SLIP-2) for clearances based on sign types.
3. Slide the slipbase casting onto the lower end of the sign support.
4. Drive a chisel or a flat-blade screwdriver into the cut on the locking collar to slightly pry the collar open. Slide the collar onto the end of the pipe so the edge of the pipe is between the face of the locking collar and the end of the edge bevel. A dead-blow hammer may be useful in positioning the collar correctly. Remove the tool used to pry the collar open. Torque the allen bolt to 60 foot-pounds (720 inch-pounds). DO NOT OVERTIGHTEN.
5. Place and align bolt keeper plate on slip plate and lift assembled sign and support into position.
6. Place one washer on each bolt and insert them through keeper plate and the notches on the slip plate and casting. After inserting each bolt, place one washer and a nut on the bolt and hand-tighten all three.
7. The breakaway features of this system will work when all three bolts are tightened between 40 to 80 foot-pounds (480 to 960 inch-pounds). The Engineer shall determine the appropriate bolt torque for each project. Tighten all bolts by working around the support in approximately 10 foot-pound increments to assure a balanced tension in the bolts. All three bolts shall be torqued the same. DO NOT OVERTIGHTEN.

DISCLAIMER
The use of this standard is governed by the "Texas Engineering Practice Act". No warranty of any kind is made by TxDOT for any purpose whatsoever. TxDOT assumes no responsibility for the conversion of this standard to other formats or for incorrect results or damages resulting from its use.

SPLICED
ACC.

STANDARD PLANS
Texas Department of Transportation
Traffic Operations Division

SIGN MOUNTING DETAILS SMALL ROADSIDE SIGNS TRIANGULAR SLIPBASE SYSTEM

SMD(SLIP-1)-02

©TxDOT July 2002	DN: BAS	CK: CRB	DW: FDN	CK: CAL	
REVISIONS	STATE DIST/DIVISION	FEDERAL REGION	FEDERAL AID PROJECT		SHEET
	SAT	6			721
COUNTY		CONTROL	SECTION	JOB	HIGHWAY
BEXAR		2708	01	022, ETC	FM2696

DISCLAIMER
The use of this standard is governed by the "Texas Engineering Practice Act". No warranty of any kind is made by TxDOT for any purpose whatsoever. TxDOT assumes no responsibility for the conversion of this standard to other formats or for incorrect results or damages resulting from its use.

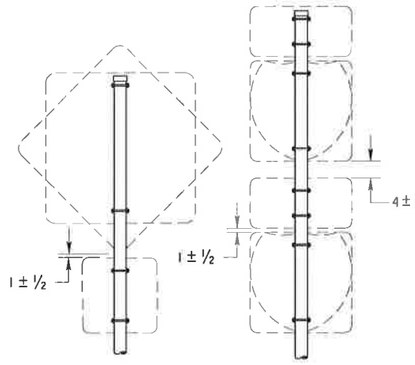

SM RD SGN ASSM TY XXXXX(1)XX(P)

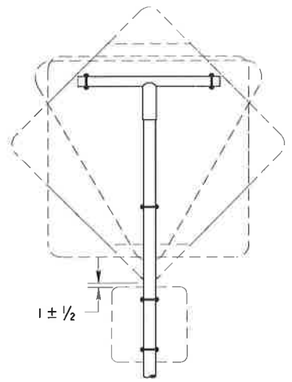

SM RD SGN ASSM TY XXXXX(1)XX(T)

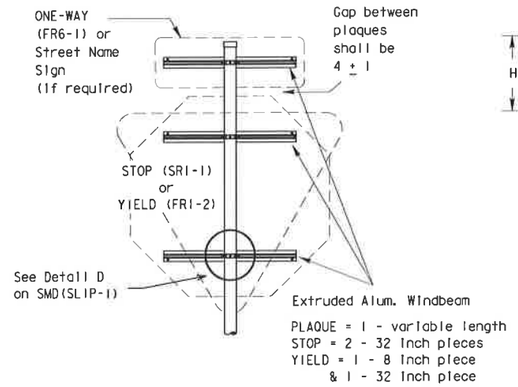

SM RD SGN ASSM TY XXXXX(1)XX(P-BM)

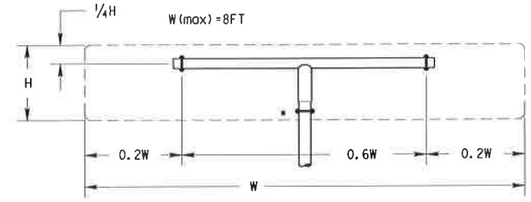

SM RD SGN ASSM TY XXXXX(1)XX(T)
(* - See Note 13)

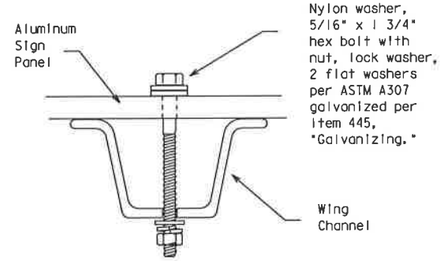

Top View
Detail A

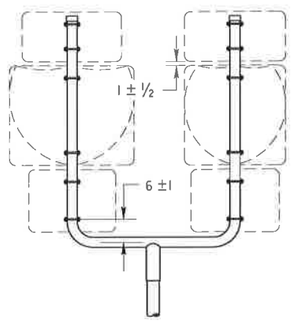

SM RD SGN ASSM TY XXXXX(1)XX(U)

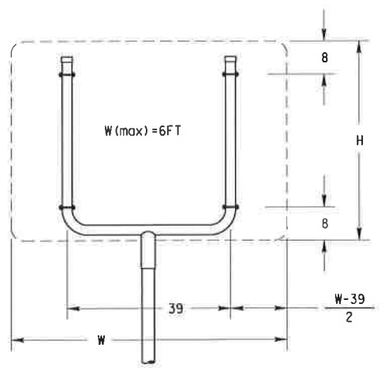

SM RD SGN ASSM TY XXXXX(1)XX(U)

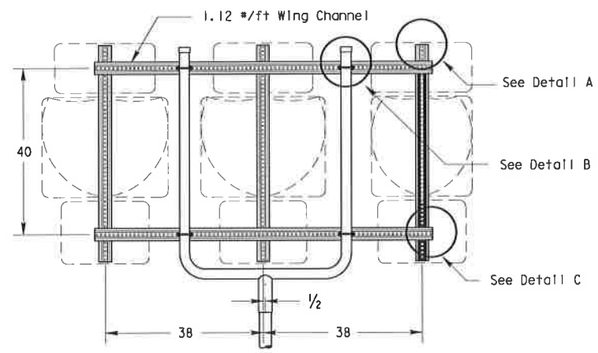

SM RD SGN ASSM TY XXXXX(1)XX(U-WC)
(See Note 12)

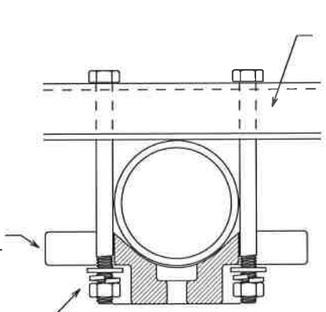

Top View
Detail B

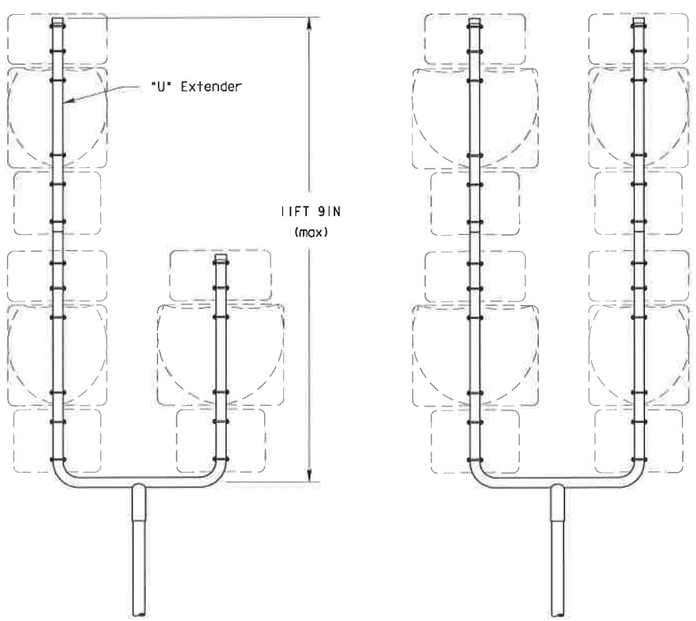

SM RD SGN ASSM TY S80(1)XX(U-1EXT)

SM RD SGN ASSM TY S80(1)XX(U-2EXT)

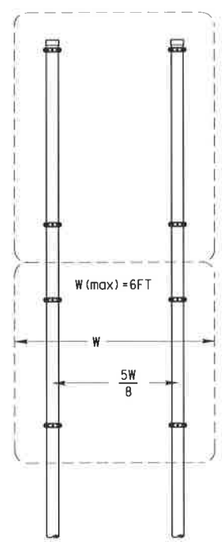

SM RD SGN ASSYM TY XXXXX(2)XX(P)

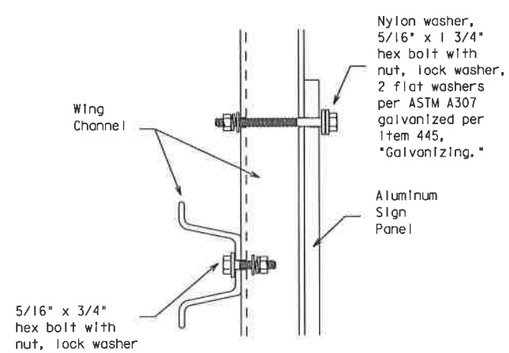

Side View
Detail C

GENERAL NOTES:

1.

SIGN SUPPORT	# OF POSTS	MAX. SIGN AREA
10 BWG	1	16 SF
10 BWG	2	32 SF
Sch 80	1	32 SF
Sch 80	2	64 SF

2. The Engineer may require that a Schedule 80 post be used in place of a 10 BWG where a sign height is abnormally high due to a fill slope.
3. Sign supports shall not be spliced except where shown. Sign support posts shall not be spliced.
4. Aluminum sign blanks shall conform to Departmental Material Specifications DMS-7110 and shall have the following minimum thicknesses: 0.080 for signs less than 7.5 sq. ft., 0.100 for signs 7.5 to 15 sq. ft., and 0.125 for signs greater than 15 sq. ft.
5. Plywood signs shall conform to Departmental Material Specification DMS-7100 and shall be 5/8 inches thick.
6. Signs that require specific supports due to reasons in addition to windloading are indicated on the "REQUIRED SUPPORT" table on this sheet.
7. For horizontal rectangular signs, T-brackets are used for signs 24 inches or less in height. U-brackets are used for signs of greater height.
8. When two triangular slipbase supports are used to support a single sign, they shall not be "rigidly" connected to each other except through the sign panel. This will allow each support to act independently when impacted by an errant vehicle.
9. Wing channel shall meet ASTM A 1011 SS Gr 50 and be galvanized per ASTM A 123.
10. Excess pipe, winged channel, or windbeam shall be cut off so that it does not extend beyond the sign panel (i.e., excess support shall not be visible when the sign is viewed from the front.) Repair galvanized coating at cut support ends per Item 445, "Galvanizing."
11. The Engineer may allow the use of an expanded foam foundation. A list of approved suppliers of expanding foam may be obtained from the Traffic Operations Division (TRF) or from the TRF website. The website address is: http://www.dot.state.tx.us/insdtdot/orgchart/trf/trfeng/
12. Additional route markers may be added vertically, provided the total sign area does not exceed the maximum allowable amount per Note 1.
13. Additional sign clamp required on the "T-bracket" post for 24 inch high signs. Place the clamp 3 inches above bottom of sign when possible.

REQUIRED SUPPORT

	SIGN DESCRIPTION	SUPPORT
Regulatory	48-Inch STOP sign (SR1-1)	TY 10BWG(1)XX(T) TY 10BWG(1)XX(P-BM)
	60-Inch YIELD sign (FR1-2)	TY 10BWG(1)XX(T) TY 10BWG(1)XX(P-BM)
	48x16-Inch ONE-WAY sign (FR6-1)	TY 10BWG(1)XX(T) TY 10BWG(1)XX(P-BM)
	36x48, 48x36, and 48x48-Inch signs	TY 10BWG(1)XX(T)
	48x60-Inch signs	TY S80(1)XX(T)
Warning	48x48-Inch signs (diamond or square)	TY 10BWG(1)XX(T)
	48x60-Inch signs	TY S80(1)XX(T)
	48-Inch Advance School X-ing sign (SS1-1)	TY 10BWG(1)XX(T)
	48-Inch School X-ing sign (SS2-1)	TY 10BWG(1)XX(T)
	Large Arrow sign (W1-6 & W1-7)	TY 10BWG(1)XX(T)

STANDARD PLANS
Texas Department of Transportation
Traffic Operations Division

SIGN MOUNTING DETAILS SMALL ROADSIDE SIGNS TRIANGULAR SLIPBASE SYSTEM

SMD(SLIP-2)-02

© TxDOT July 2002	DN: BAS	CK: GRB	DW: FDN	CK: CAL
REVISIONS	STATE DISTRICT: SAT	FEDERAL REGION: 6	FEDERAL AID PROJECT	SHEET 722

COUNTY	CONTROL	SECTION	JOB	HIGHWAY
BEXAR	2708	01	022, ETC	FM2696

SPLAYED ACC:

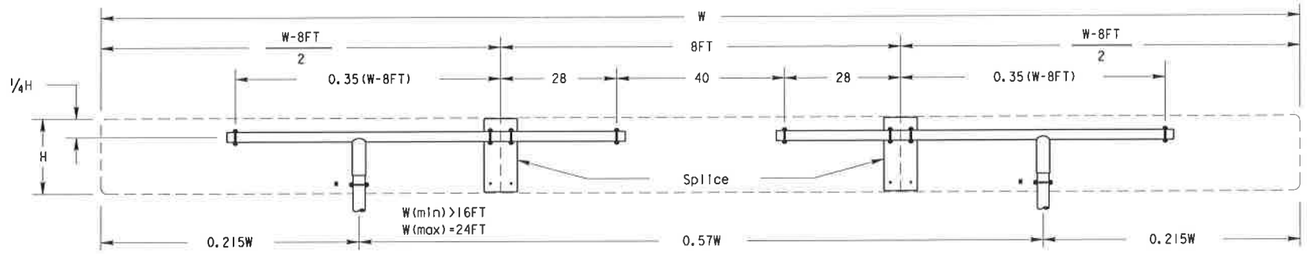

SM RD SGN ASSM TY XXXXX(2)XX(T-2EXT)

(* - See Note 13)

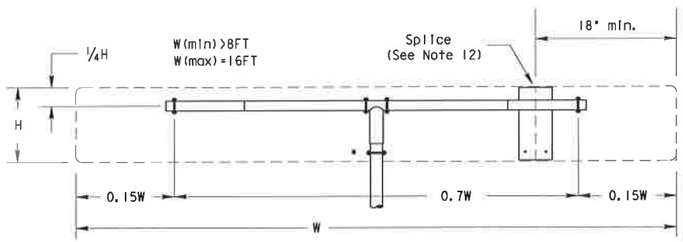

SM RD SGN ASSM TY XXXXX(1)XX(T-2EXT)

(* - See Note 13)

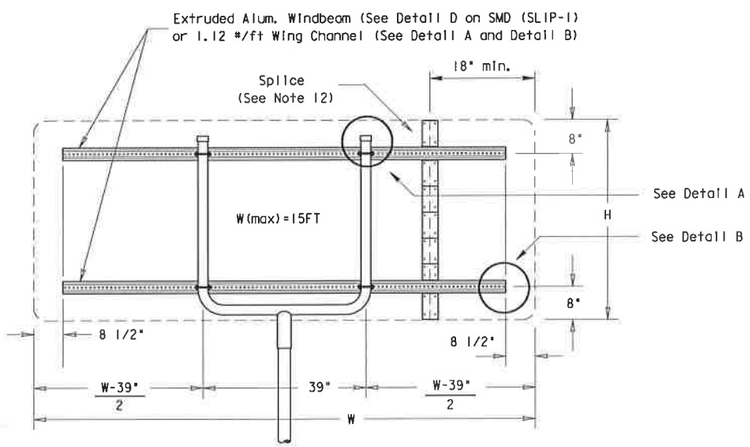

SM RD SGN ASSM TY XXXXX(1)XX(U-XX)

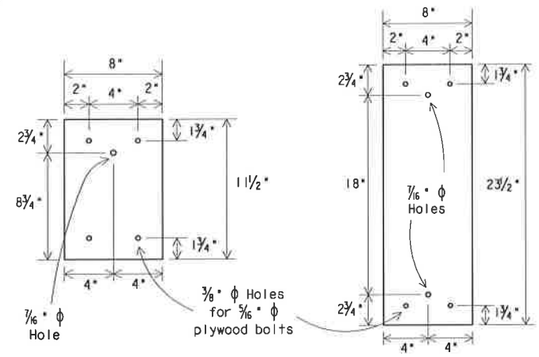

Splice Plates

Splice plates shall be 1/8 " steel plate (ASTM A36) or 1/8 " aluminum plate (ASTM B209 ALLOY 6061-T6 or 5052-H38). Steel shall be galvanized in accordance with ASTM A123.

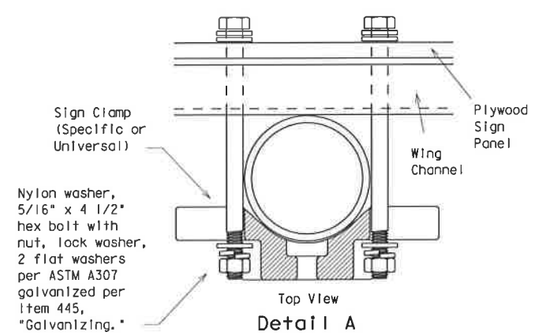

Detail A

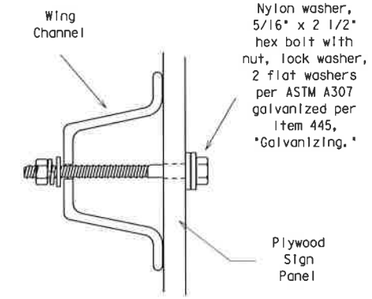

Side View

Detail B

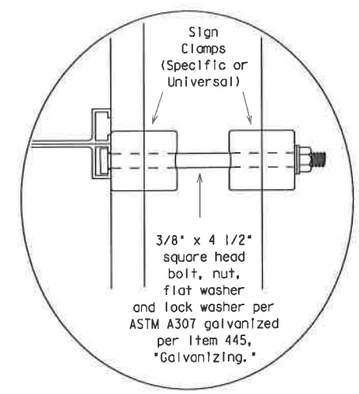

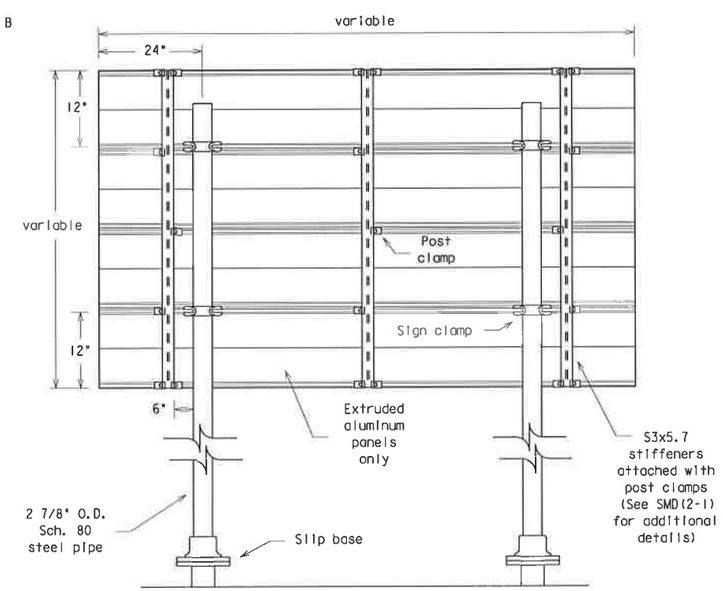

Typical Extruded Aluminum Sign Mount

SM RD SGN ASSM TY S80(2)XX(P-EXAL)

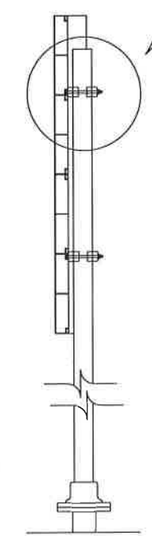

GENERAL NOTES:

1.

SIGN SUPPORT	# OF POSTS	MAX. SIGN AREA
10 BWG	1	16 SF
10 BWG	2	32 SF
Sch 80	1	32 SF
Sch 80	2	64 SF

2. The Engineer may require that a Schedule 80 post be used in place of a 10 BWG where a sign height is abnormally high due to a fill slope.
3. Sign supports shall not be spliced except where shown. Sign support posts shall not be spliced.
4. Aluminum sign blanks shall conform to Departmental Material Specifications DMS-7110 and shall have the following minimum thicknesses: 0.080 for signs less than 7.5 sq. ft., 0.100 for signs 7.5 to 15 sq. ft., and 0.125 for signs greater than 15 sq. ft.
5. Plywood signs shall conform to Departmental Material Specification DMS-7100 and shall be 5/8 inches thick.
6. Signs that require specific supports due to reasons in addition to windloading are indicated on the "REQUIRED SUPPORT" table on this sheet.
7. For horizontal rectangular signs, T-brackets are used for signs 24 inches or less in height. U-brackets are used for signs of greater height.
8. When two triangular slipbase supports are used to support a single sign, they shall not be "rigidly" connected to each other except through the sign panel. This will allow each support to act independently when impacted by an errant vehicle.
9. Wing channel shall meet ASTM A 1011 SS Gr 50 and be galvanized per ASTM A 123.
10. Excess pipe, winged channel, or windbeam shall be cut off so that it does not extend beyond the sign panel (i.e., excess support shall not be visible when the sign is viewed from the front.) Repair galvanized coating at cut support ends per item 445, "Galvanizing."
11. The Engineer may allow the use of an expanded foam foundation. A list of approved suppliers of expanding foam may be obtained from the Traffic Operations Division (TRF) or from the TRF website. The website address is: http://www.dot.state.tx.us/insdtdot/orgchart/trf/trfeng/
12. Sign blanks shall be the sizes and shapes shown on the plans. Unless otherwise shown, no panel on multi-panel plywood signs shall have a dimension less than 18 inches. Plywood signs 4 feet by 8 feet or smaller in either dimension shall be of one piece construction.
13. Additional sign clamp required on the "T-bracket" post for 24 inch high signs. Place the clamp 3 inches above bottom of sign when possible.

REQUIRED SUPPORT

	SIGN DESCRIPTION	SUPPORT
Regulatory	48-Inch STOP sign (SR1-1)	TY 10BWG(1)XX(T) TY 10BWG(1)XX(P-BM)
	60-Inch YIELD sign (FR1-2)	TY 10BWG(1)XX(T) TY 10BWG(1)XX(P-BM)
	48x16-Inch ONE-WAY sign (FR6-1)	TY 10BWG(1)XX(T) TY 10BWG(1)XX(P-BM)
	36x48, 48x36, and 48x48-Inch signs	TY 10BWG(1)XX(T)
	48x60-Inch signs	TY S80(1)XX(T)
Warning	48x48-Inch signs (diamond or square)	TY 10BWG(1)XX(T)
	48x60-Inch signs	TY S80(1)XX(T)
	48-Inch Advance School X-ing sign (SS1-1)	TY 10BWG(1)XX(T)
	48-Inch School X-ing sign (SS2-1)	TY 10BWG(1)XX(T)
	Large Arrow sign (W1-6 & W1-7)	TY 10BWG(1)XX(T)

DISCLAIMER
The use of this standard is governed by the "Texas Engineering Practice Act". No warranty of any kind is made by TxDOT for any purpose whatsoever. TxDOT assumes no responsibility for the conversion of this standard to other formats or for incorrect results or damages resulting from its use.

DISPLAYED

	1	2	3	4	5	6	7	8	9	10	11	12	13	14	15	16
ACC:	1	2	3	4	5	6	7	8	9	10	11	12	13	14	15	16

STANDARD PLANS
Texas Department of Transportation
Traffic Operations Division

SIGN MOUNTING DETAILS SMALL ROADSIDE SIGNS TRIANGULAR SLIPBASE SYSTEM

SMD(SLIP-3)-02

©TxDOT July 2002 DN: BAS CK: GRB DW: FDN CK: CAL

REVISIONS

STATE DISTRICT	FEDERAL REGION	FEDERAL AID PROJECT	SHEET
SAT	6		723

COUNTY	CONTROL	SECTION	JOB	HIGHWAY
BEXAR	2708	01	022, ETC	FM2696

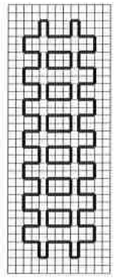

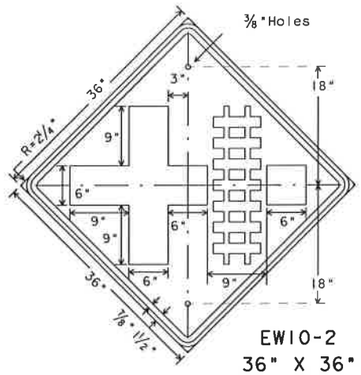

EW10-2
36" X 36"

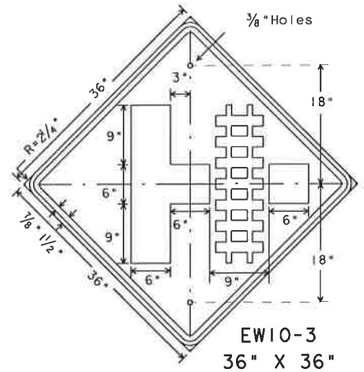

EW10-3
36" X 36"

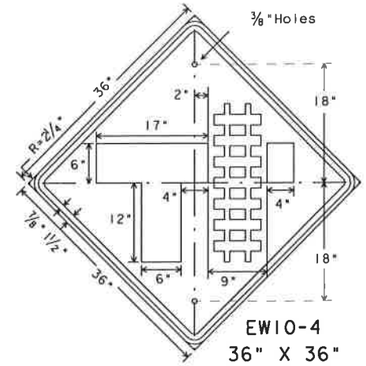

EW10-4
36" X 36"

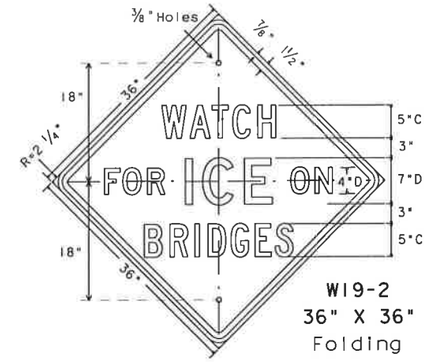

W19-2
36" X 36"
Folding

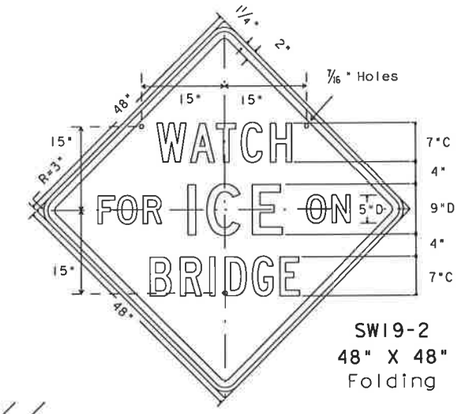

SW19-2
48" X 48"
Folding

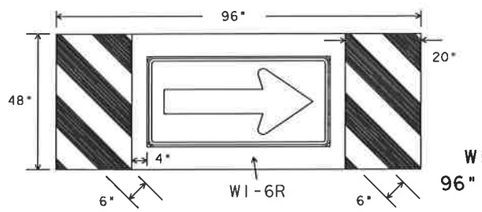

W1-9R
96" x 48"

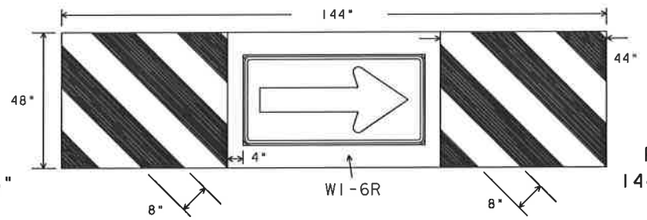

FW1-9R
144" x 48"

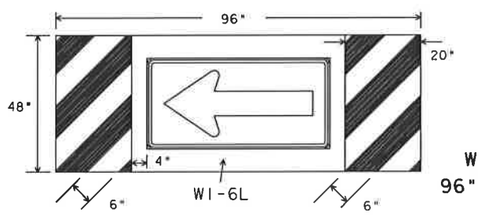

W1-9L
96" x 48"

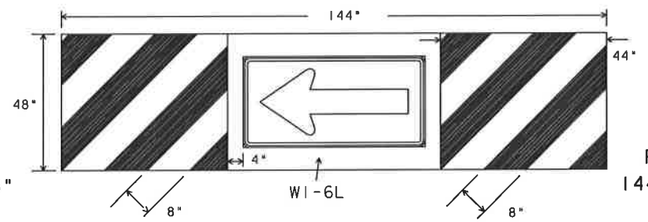

FW1-9L
144" x 48"

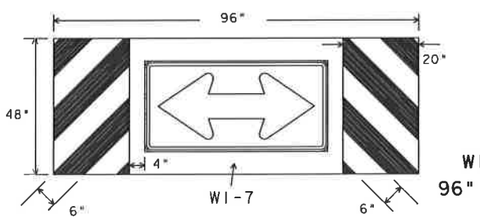

W1-10
96" x 48"

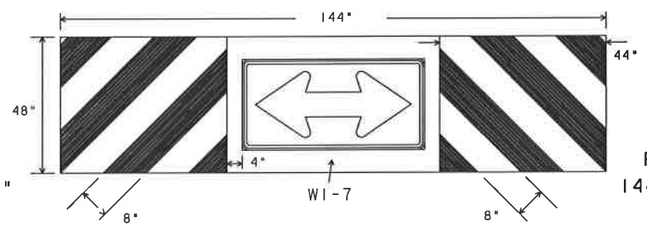

FW1-10
144" x 48"

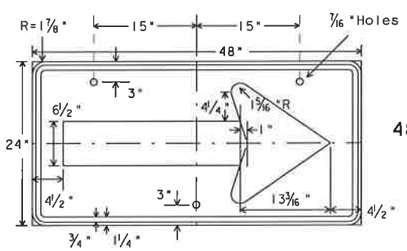

W1-6
48" X 24"

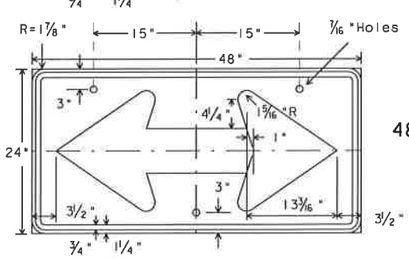

W1-7
48" X 24"

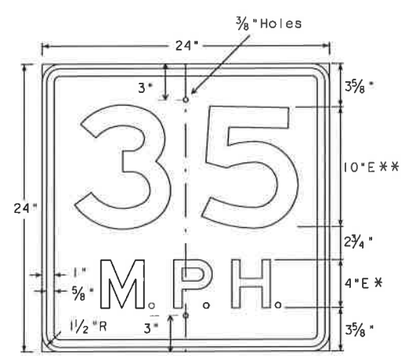

* Increase spacing 100%
** optically space numerals about vert. centerline

SW13-1
24" X 24"

Speed value to be determined at the site by the Engineer.

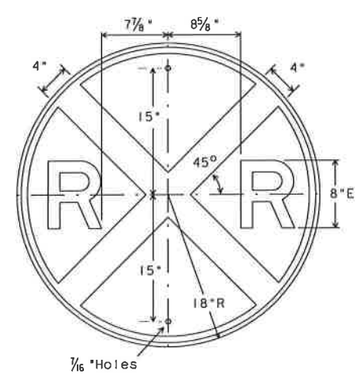

W10-1
36" Diameter

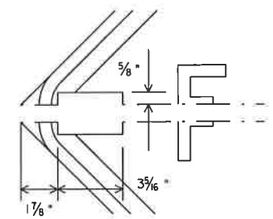

Aluminum

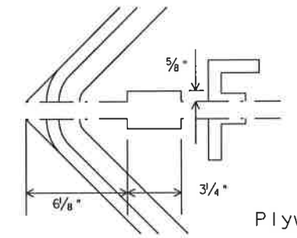

Plywood

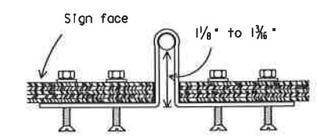

Folding Sign Hinge Details

Aluminum folding signs shall use 3" flat hinges, three per sign. The hinge slot on each half of sign is 5/8" deep by 3 5/16" wide. The sign halves are seperated by 3/32" when hinges are installed to the back of the sign with four 3/16" pop rivets. Location of hinges on the sign are as shown on above detail.

Plywood folding signs shall use 6" strap hinges, three per sign. The hinge slot on each half of sign is 5/8" deep by 3 1/4" wide. The hinges are bent with tapered side of holes on the external side, and attached to the back of sign with pivot extending through to front of sign. Attachment of each hinge will be with four each of 10x24x1" flat head screws with a tapered head shank, 5/16"x 3/16" flat washers and 3/16" bolt x 7/16" wrench hex nuts. Hinge bending and location on sign are as shown on above details.

SPECIFICATION REFERENCE TABLE
MATERIALS AND TESTS DIVISION SPECIFICATIONS

PLYWOOD SIGN BLANKS		D-9-7100
ALUMINUM SIGN BLANKS		D-9-7110
Square Ft.	Min. Thickness	
Less than 7.5	0.080	
7.5 to 15	0.100	
Greater than 15	0.125	
REFLECTIVE SHEETING, TYPE C (HIGH SPECIFIC INTENSITY)		D-9-8300
VINYL NON-REFLECTIVE DECAL SHEETING		D-9-8320

GENERAL NOTES:

The alphabets and lateral spacing between letters and numerals shall conform with the Texas "Manual on Uniform Traffic Control Devices for Streets and Highways", latest edition, and any approved changes thereto. Lateral spacing of text shall provide a balanced appearance. All materials shall conform to Department Specifications.

Legend (except where noted), shall be black and applied by screening process, cut-out vinyl non-reflective decal sheeting or combination thereof. Background shall be yellow reflective sheeting (Type C).

Sign blanks shall be fabricated as specified in the plans of one piece 5/8 inch thick plywood (Type A) or one piece aluminum alloy (Type A) of the approved thickness.

Large arrow signs W1-9, W1-10, FW1-9 and FW1-10 shall be composed of a standard W1-6 or W1-7 sign attached directly to the background material.

©1999

STANDARD PLANS
Texas Department of Transportation
Traffic Operations Division

WARNING SIGNS

SAN ANTONIO DISTRICT STANDARD

W(3)-95

ORIG. DRAWN DATE: JULY 1990	DW: LR	CK:	DW: DN	CK:	NEG. NO.:
REVISIONS 8-90 8-95	STATE DISTRICT SAT	FEDERAL REGION 6	FEDERAL AID PROJECT		SHEET 724
	COUNTY BEXAR		CONTROL 2708	SECTION 01	JOB 022 HIGHWAY FM2696

Rev. 6-97

CK: CW
DW: DN
CK: MT

ACC: a58hplc/usr/d580504
FILE:

DISCLAIMER
The use of this standard is governed by the "Texas Engineering Practice Act". No warranty of any kind is made by TxDOT for any purpose whatsoever. TxDOT assumes no responsibility for the conversion of this standard to other formats or for incorrect results or damages resulting from its use.

OBJECT MARKERS

TYPES 1 and 4

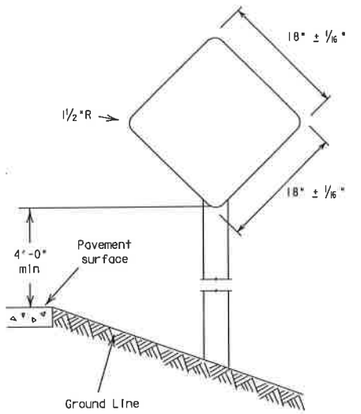

TYPE 1
18" x 18"
Yellow Type E Sheeting

TYPE 4
18" x 18"
Red Type D Sheeting

Use Sign blank 0.080" thick sheet aluminum conforming to ASTM B-209 Alloy 6061-T6. Use reflective sheeting in accordance with DMS 8300.

TYPE 2

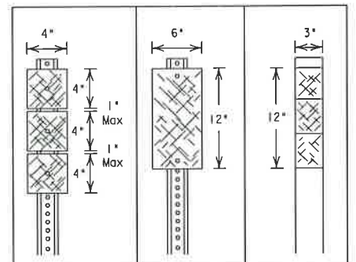

Number of Reflectors	X	Y	Z
Post	WC	WC	FLX/RCR

ALL TYPE 2 OBJECT MARKERS ARE YELLOW

WC-wing channel post (1.12 lbs/ft) per ASTM A 1011 SS Gr 50

FLX/RCR-flexible post (driveable and surface mount) or recycled rubber

Typically used on bridge rail approach ends, some bridge abutments and at bridge rail exits on two-lane, two-way roadways

TYPE 3

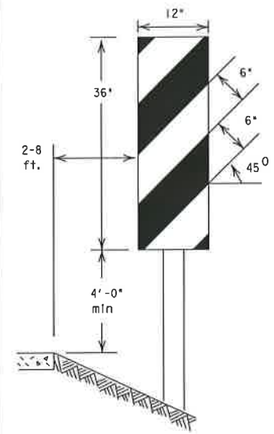

Use Sign blank .080" thick sheet aluminum conforming to ASTM B-209 Alloy 6061-T6. Use reflective sheeting in accordance with DMS 8300, Type E. Use at bridges with no approach rails.

DELINEATORS

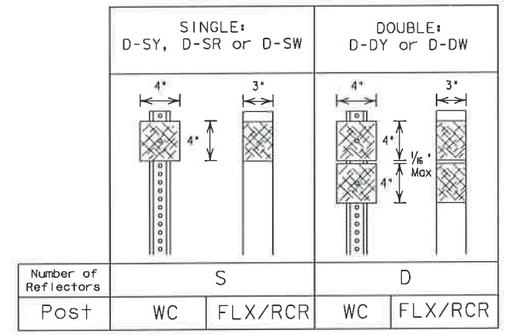

Number of Reflectors	S		D	
Post	WC	FLX/RCR	WC	FLX/RCR

Length of post may vary to meet field conditions.

REFLECTOR UNITS: W-white, R-red or Y-yellow

WC-wing channel post (1.12 lbs/ft) per ASTM A 1011 SS Gr 50

FLX/RCR-flexible post (driveable and surface mount) or recycled rubber.

REFLECTOR UNIT SIZES

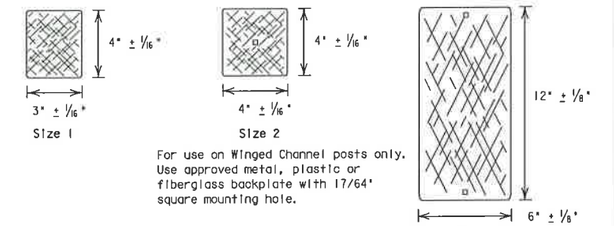

Size 1

Size 2
For use on Winged Channel posts only. Use approved metal, plastic or fiberglass backplate with 17/64" square mounting hole.

Size 3
For use on Winged Channel posts only. Use approved metal, plastic or fiberglass backplate with 17/64" square mounting hole.

REFLECTIVE SHEETING
Yellow - DMS 8300, Type E White - DMS 8300, Type D
Red- - DMS 8300, Type D

TYPE C BARRIER REFLECTORS

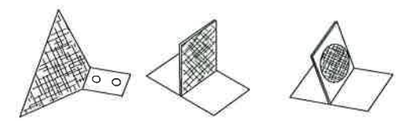

REFLECTIVE SHEETING
Yellow - DMS 8300, Type E
White - DMS 8300, Type D

Mounting holes - 17/64 "

A Type A or B reflector unit (per DMS 8600) attached to a bracket to facilitate the mounting of the reflector on concrete traffic barrier, railing, metal beam guard fence (MBGF) or other locations shown on the plans. A list of approved Type C reflectors can be found at:

ftp://ftp.dot.state.tx.us/pub/txdot-info/amd/mpl/typcdein.pdf

D & OM DESCRIPTIVE CODES

INSTL DEL ASSM (D-XX) SZ X (XXX) XXX (XX)

Number of Reflectors
- S = Single
- D = Double

Color of Reflectors
- W = White
- Y = Yellow

Reflector Unit Size
- 1 or 2

Type of Post
- WC = Wing Channel Post
- FLX = Flexible Post
- RCR = Recycled Rubber
- TYC = Type C Barrier Reflector

Type of Installations
- GND = Ground Mount
- CTB = Concrete Barrier Mount (Type C only)
- GF1, GF2, GF3 = Guard Fence Attachment
- SRF = Surface Mount
- SLF = Self Righting

Direction
- IF REQUIRED
- BI = BI-Directional
- BR = BI-Directional with red on back

INSTL OM ASSM (OM-XX) (XXX) XXX (XX)

Type of Object Marker
- 1, 2, 3, or 4

Number of Reflectors
- X = 3 each Size 2 reflector units (Type 2 only)
- Y = 1 Size 3 reflector unit (Type 2 only)
- Z = 3 each Size 1 reflector units (Type 2 only)
- L = Left Side (Type 3 Object Marker only)
- R = Right Side (Type 3 Object Marker only)

Type of Post
- WC = Wing Channel Post
- FLX = Flexible Post
- RCR = Recycled Rubber
- TWT = Thin Walled Tubing

Type of Mount
- GND = Ground Mount
- WP = Wedge Anchor Plastic System
- SRF = Surface Mount
- SLF = Self Righting
- WS = Wedge Anchor Steel System

Direction
- IF REQUIRED
- BI = BI-Directional

TYPES OF INSTALLATIONS

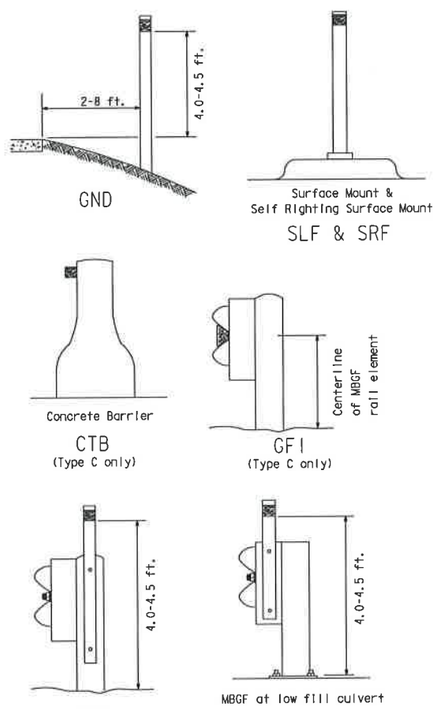

GROUND MOUNT DETAILS

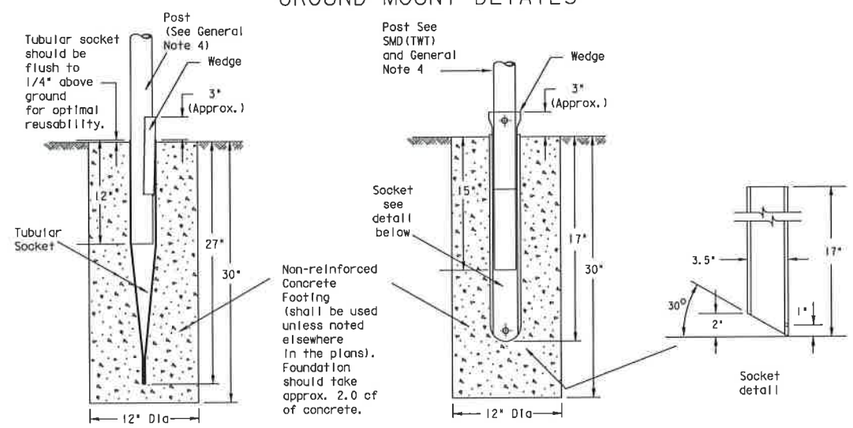

WEDGE ANCHOR STEEL SYSTEM

WEDGE ANCHOR PLASTIC SYSTEM

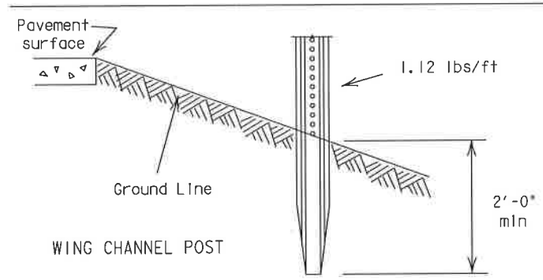

WING CHANNEL POST

NOTE: Wing Channel post option is to be used for Type 2 Object Markers and delineators only

GENERAL NOTES

1. Place delineators on a section of roadway the same distance from the edge of pavement.
2. Where a restriction prevents consistent placement from the pavement edge, place the affected object markers in line with the innermost edge of the obstruction.
3. When object markers are more than 8 ft from the edge of the pavement, it may not be possible to maintain a height of 4.0-4.5 ft. If this is the case, place the object markers as close to the desired height as possible.
4. Install all delineators, object markers and barrier reflectors in accordance with the manufacturer's recommendation.

DEPARTMENTAL MATERIAL SPECIFICATIONS

FLEXIBLE DELINEATOR & OBJECT MARKER POSTS (DRIVEABLE & SURFACE MOUNT TYPES)	DMS-4400
FLAT SURFACE REFLECTIVE SHEETING	DMS-8300
DELINEATORS AND OBJECT MARKERS	DMS-8600

STANDARD PLANS
Texas Department of Transportation
Traffic Operations Division

DELINEATOR & OBJECT MARKER INSTALLATION AND MATERIAL DESCRIPTION D & OM(I)-04

©TxDOT August 2004	DN: - DAS	CK: - GRB	DW: - FON	CK: - CAL
REVISIONS	STATE DISTRICT: SAT	FEDERAL REGION: 6	FEDERAL AID PROJECT	SHEET: 7605
COUNTY: BEXAR	CONTROL: 2706	SECTION: 01	JOB:	HIGHWAY: IH-10

ACC:
DISPLAYED
1 2 3 4 5 6 7 8 9 10 11 12 13 14 15 16
17 18 19 20 21 22 23 24 25 26 27 28 29 30 31 32
33 34 35 36 37 38 39 40 41 42 43 44 45 46 47 48
49 50 51 52 53 54 55 56 57 58 59 60 61 62 63

DISCLAIMER
The use of this standard is governed by the "Texas Engineering Practice Act". No warranty of any kind is made by TxDOT for any purpose whatsoever. TxDOT assumes no responsibility for the conversion of this standard to other formats or for incorrect results or damages resulting from its use.

DISPLAYED

	1	2	3	4	5	6	7	8	9	10	11	12	13	14	15	16
1																
2																
3																
4																
5																
6																
7																
8																
9																
10																
11																
12																
13																
14																
15																
16																
17																
18																
19																
20																
21																
22																
23																
24																
25																
26																
27																
28																
29																
30																
31																
32																
33																
34																
35																
36																
37																
38																
39																
40																
41																
42																
43																
44																
45																
46																
47																
48																
49																
50																
51																
52																
53																
54																
55																
56																
57																
58																
59																
60																
61																
62																
63																
64																
65																
66																
67																
68																
69																
70																
71																
72																
73																
74																
75																
76																
77																
78																
79																
80																

ACC:

USES OF DELINEATORS

Type of Road or Condition		Condition for use: Required (shall be used)	Recommended (should be used)	Optional (may be used)	Prohibited (cannot be used)	Delineator Spacing
Freeways or Expressways	Tangent	D-SW on right or raised pavement markers				200-530 ft
	Curve	D-SW on right				see Table
	Ramp	D-SW on one side See Note 1 *	On outside of interchange ramp curves			
Other Than Freeways or Expressways	Tangent			D-SW on right or left side	D-SY or D-DY on left side of two-way roads	200-530 ft
	Curve					see Table
Acceleration and Deceleration Lanes			D-DW or D-DY			100 ft spacing
Crossovers			D-DY on left side of through road on far side of crossover			
Wrong-way				D-SR for wrong-way traffic		
Pavement Narrowing (lane merge)				D-SW (right) or D-SY (left) adjacent to affected lane for full length of transition See Note 2 **		
Truck escape ramps			D-SR on both sides of ramp			50 ft spacing
With guard fence, bridge rail, or concrete barrier						100 ft use min. of 3

General Notes: Unless indicated otherwise, the color of a delineators must conform to the color of the pavement edge line on the side of the road where the delineators are placed. Barrier markers can be used to replace required delineators. DS-R can be mounted on the back side of existing delineator posts.

* 1. Delineation required on one side either SY or SW.

** 2. Minimum of 3.

When degree of curve or radius is known

Degree of Curve	Radius of Curve (Feet)	Spacing in Curve (Feet)	Spacing in Strtawy (Feet)	Chevron Spacing in Curve (Feet)
		A	2A	B
1	5730	225	450	
2	2865	160	320	
3	1910	130	260	
4	1433	110	220	
5	1146	100	200	160
6	955	90	180	160
7	819	85	170	160
8	716	75	150	160
9	637	75	150	120
10	573	70	140	120
11	521	65	130	120
12	478	60	120	120
13	441	60	120	120
14	409	55	110	80
15	382	55	110	80
16	358	55	110	80
19	302	50	100	80
23	249	40	80	80
29	198	35	70	40
38	151	30	60	40
57	101	20	40	40

Curve delineator approach and departure spacing should include 3 delineators spaced at 2A. This spacing should be used during design preparation or when the degree of curve is known.

When degree of curve or radius is not known

Advisory Speed (MPH)	Spacing in Curve	Spacing in Strtawy	Chevron Spacing in Curve
	A	2xA	B
65	130	260	
60	110	220	
55	100	200	160
50	85	170	160
45	75	150	160
40	70	140	120
35	60	120	120
30	55	110	80
25	50	100	80
20	40	80	80
15	35	70	40

If the degree of curve is not known, delineator spacing may be determined based on the Advisory Speed of the curve. Use the delineator curve spacing for each Advisory Speed (MPH).

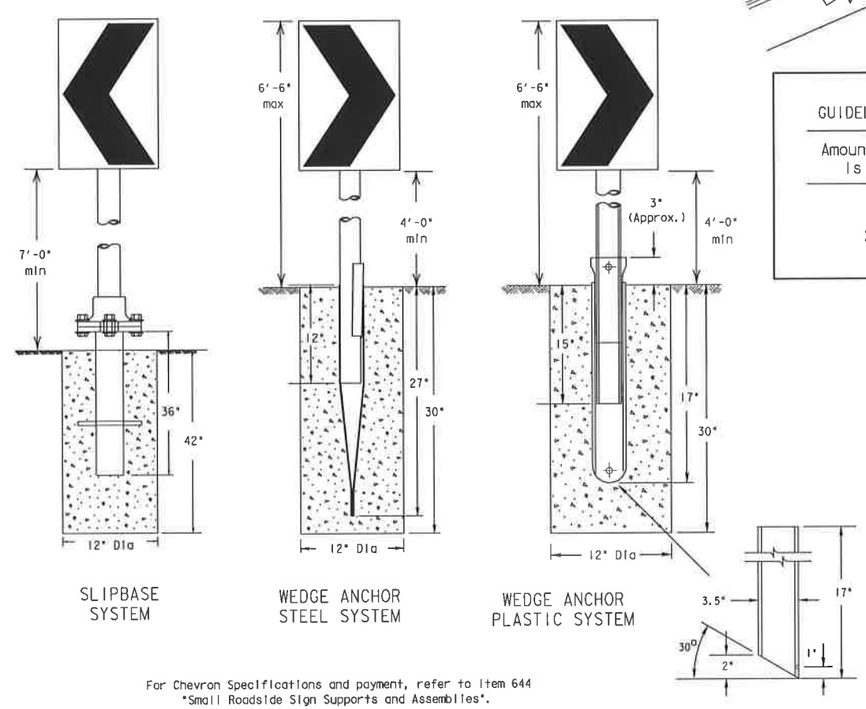

For Chevron Specifications and payment, refer to Item 644 "Small Roadside Sign Supports and Assemblies".

Suggested Spacing for Highway Delineators on Horizontal Curves △

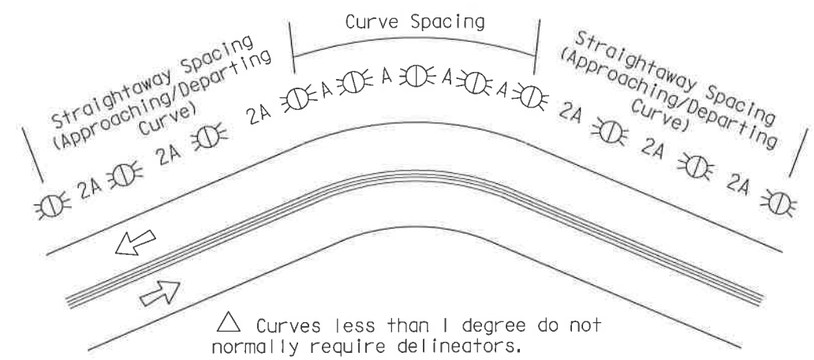

Suggested Spacing for Chevrons on Horizontal Curves △

The Chevron may be used to provide additional emphasis and guidance for a change in horizontal alignment. A Chevron may be used as a supplement to delineation.

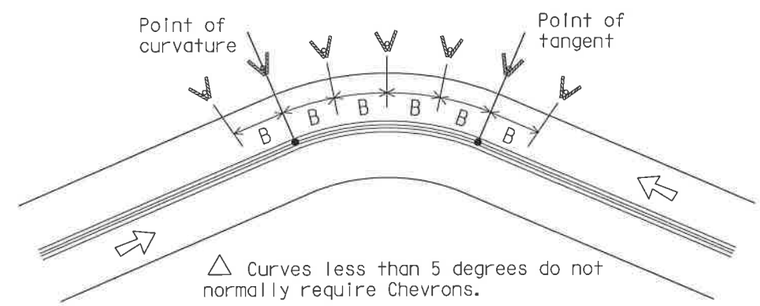

GUIDELINES FOR USE OF WARNING DEVICES AT CURVES WITH ADVISORY SPEED LIMITS

Amount by which Advisory Speed is less than Posted Speed	Warning Devices Needed
0 to 14 MPH	RPMs
15 to 24 MPH	RPMs and Delineators
25 MPH or greater	RPMs and Chevrons

STANDARD PLANS
Texas Department of Transportation
Traffic Operations Division

TYPICAL DELINEATOR & OBJECT MARKER PLACEMENT DETAILS

D & OM(2)-04

©TxDOT August 2004	DN: DAS	CK: GRB	DW: FDN	CK: CAL
REVISIONS	STATE DISTRICT: SAT	FEDERAL REGION: 6	FEDERAL AID PROJECT	SHEET: 72B
COUNTY: BEXAR	CONTROL: 2308	SECTION: 01	JOB: 08.DC	HIGHWAY

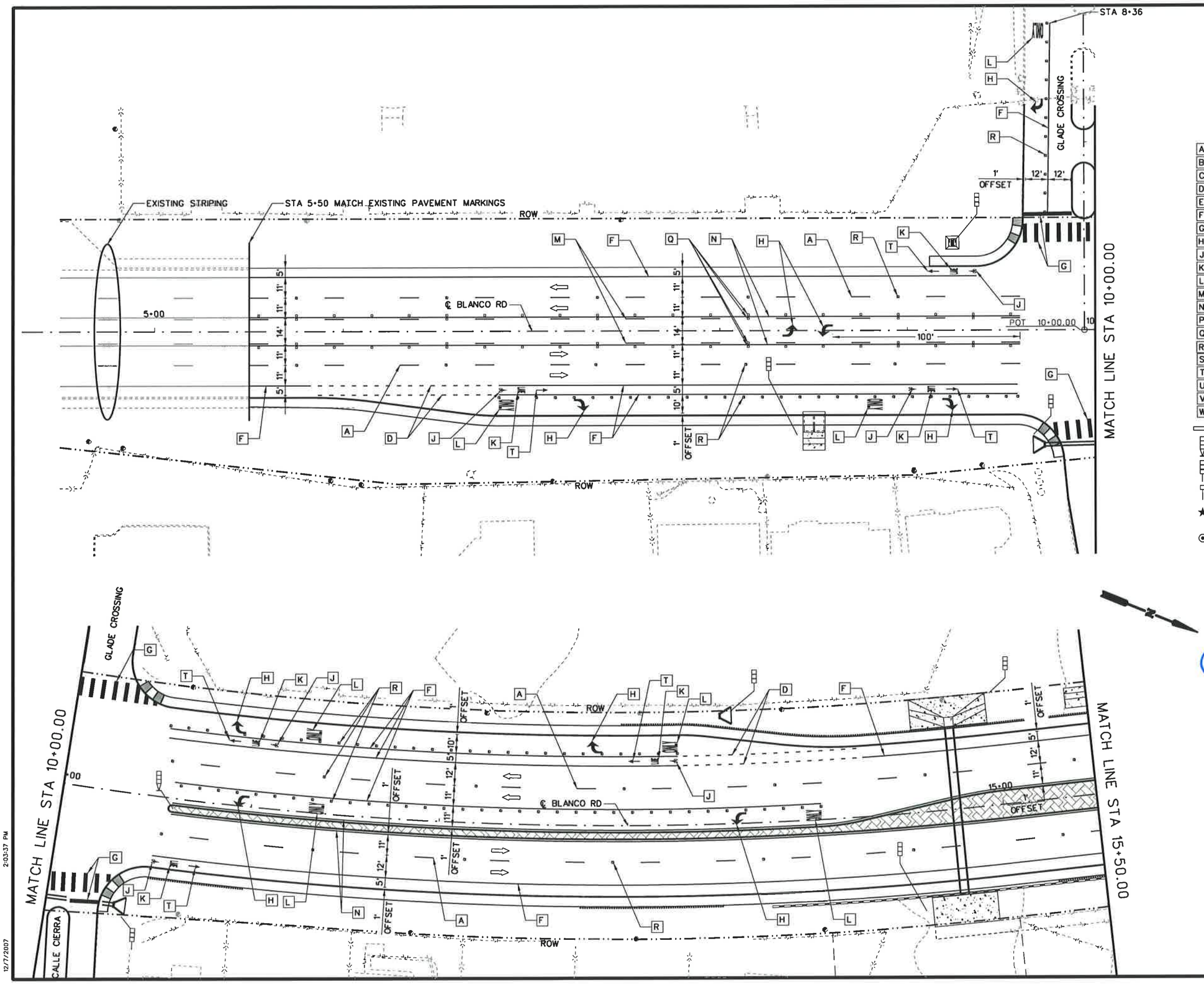

25 12.5 0 25 50
HORIZ. SCALE FEET

LEGEND

A	REFL PAV MRK TY I (W)(4")(BRK)(100 MIL)	★
B	REFL PAV MRK TY I (W)(4")(DOT)(100 MIL)	★
C	REFL PAV MRK TY I (W)(4")(SLD)(100 MIL)	★
D	REFL PAV MRK TY I (W)(8")(DOT)(100 MIL)	★
E	REFL PAV MRK TY I (W)(8")(LNDP)(100 MIL)	★
F	REFL PAV MRK TY I (W)(8")(SLD)(100 MIL)	★
G	REFL PAV MRK TY I (W)(24")(SLD)(100 MIL)	★
H	REFL PAV MRK TY I (W)(ARROW)(100 MIL)	⊙
J	REFL PAV MRK TY I (W)(BIKE SYML)(100MIL)	⊙
K	REFL PAV MRK TY I (W)(BIKE WORD)(100MIL)	⊙
L	REFL PAV MRK TY I (W)(WORD)(100 MIL)	⊙
M	REFL PAV MRK TY I (Y)(4")(BRK)(100 MIL)	★
N	REFL PAV MRK TY I (Y)(4")(SLD)(100 MIL)	★
P	REFL PAV MRK TY I (Y)(24")(SLD)(100 MIL)	★
Q	REFL PAV MRKR TY II-A-A	
R	REFL PAV MRKR TY II-C-R	
S	REFL PAV MRKR TY I-C	
T	REFL PAV MRK TY I (W)(BIKE ARROW)(100MIL)	⊙
U	REFL PAV MRK TY I (Y)(8")(SLD)(100 MIL)	★
V	REFL PAV MRK TY I (W)(DBL ARROW)(100 MIL)	⊙
W	REFL PAV MRK TY I (Y)(MED NOSE)(100 MIL)	⊙

⇨ DIRECTION OF TRAFFIC FLOW

OBJECT MARKER ASSEMBLY (OM-2Z)(FLX)SLF

OBJECT MARKER ASSEMBLY (OM-2X)(WC)GND

DELINEATOR ASSEMBLY (D-SW)(SZ-1)(FLX)GF3

★ TYPE II MARKINGS SHALL BE USED FOR PAVEMENT SEALER. REFER TO SPECIAL SPECIFICATION 6110.

⊙ TYPE II MARKINGS SHALL BE USED FOR PAVEMENT SEALER. REFER TO STANDARD SPECIFICATION 666.

STATE OF TEXAS
JOSE A. SANCHEZ
87890
LICENSED
PROFESSIONAL ENGINEER

2007.12.07
JOSE A. SANCHEZ DATE

NO.	REVISION	BY	DATE

CP&Y Chiang, Patel & Yerby, Inc.

TEDSI INFRASTRUCTURE GROUP
Consulting Engineers
10999 IH 10 West • Suite 330
San Antonio, Texas 78230
(210) 858-0610

BEXAR COUNTY
PUBLIC WORKS DIVISION

F.M. 2696 (BLANCO ROAD)

PAVEMENT MARKINGS LAYOUT

BEGINNING OF PROJECT TO STA 15+50.00

SHEET 1 OF 19

Designed: RC	STATE	BEXAR COUNTY FILE NUMBER	PLAN SET NO.	
Checked: JAS	TEXAS		727	
Drawn: RC	COUNTY		OF	
Checked: JAS	BEXAR		842	

$FILE$
12/7/2007 2:03:37 PM

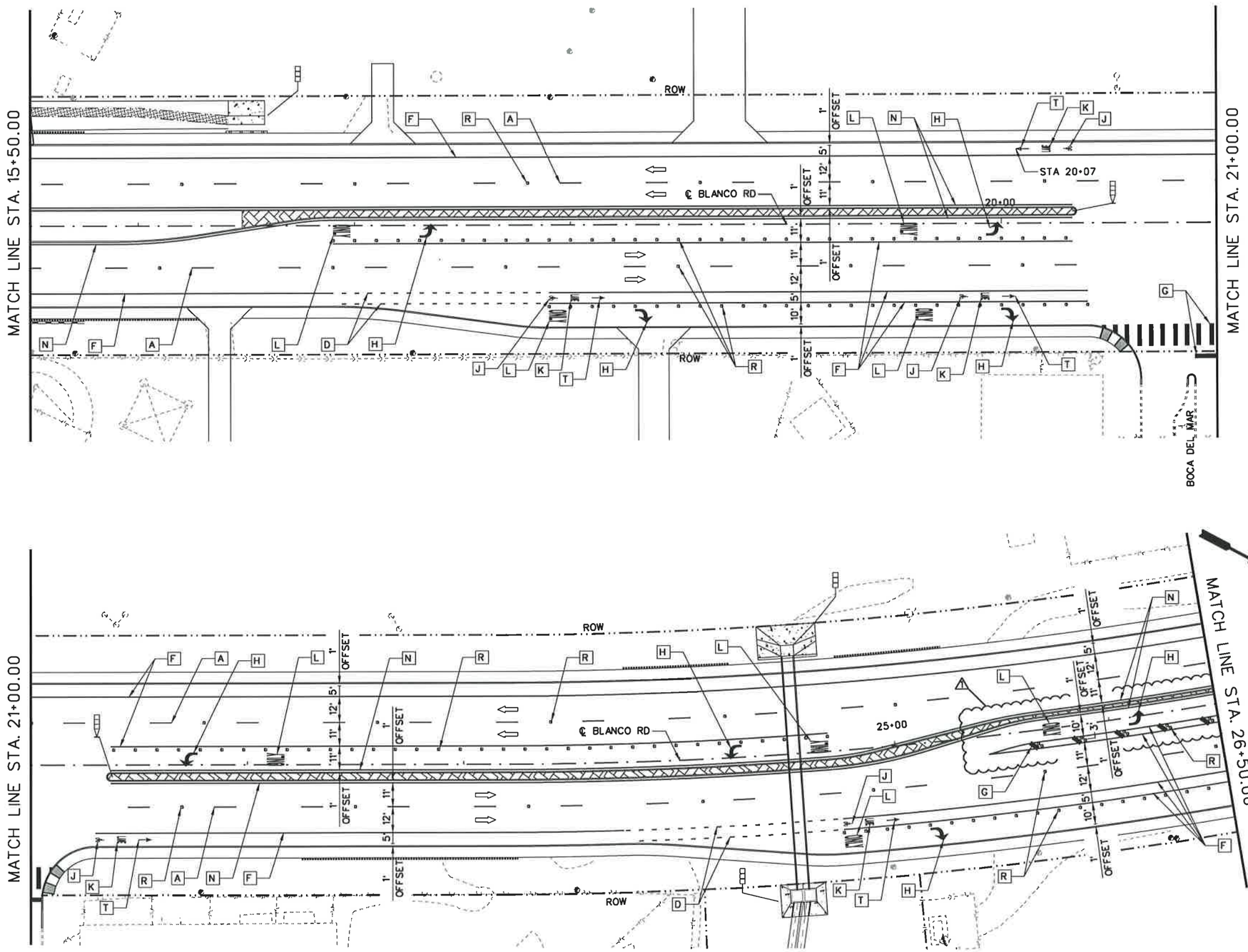

25 12.5 0 25 50
HORIZ. SCALE FEET

LEGEND

A	REFL PAV MRK TY I (W)(4")(BRK)(100 MIL)	★
B	REFL PAV MRK TY I (W)(4")(DOT)(100 MIL)	★
C	REFL PAV MRK TY I (W)(4")(SLD)(100 MIL)	★
D	REFL PAV MRK TY I (W)(8")(DOT)(100 MIL)	★
E	REFL PAV MRK TY I (W)(8")(LNDP)(100 MIL)	★
F	REFL PAV MRK TY I (W)(8")(SLD)(100 MIL)	★
G	REFL PAV MRK TY I (W)(24")(SLD)(100 MIL)	★
H	REFL PAV MRK TY I (W)(ARROW)(100 MIL)	⊙
J	REFL PAV MRK TY I (W)(BIKE SYML)(100MIL)	⊙
K	REFL PAV MRK TY I (W)(BIKE WORD)(100MIL)	⊙
L	REFL PAV MRK TY I (W)(WORD)(100 MIL)	⊙
M	REFL PAV MRK TY I (Y)(4")(BRK)(100 MIL)	★
N	REFL PAV MRK TY I (Y)(4")(SLD)(100 MIL)	★
P	REFL PAV MRK TY I (Y)(24")(SLD)(100 MIL)	★
Q	REFL PAV MRKR TY II-A-A	
R	REFL PAV MRKR TY II-C-R	
S	REFL PAV MRKR TY I-C	
T	REFL PAV MRK TY I (W)(BIKE ARROW)(100MIL)	⊙
U	REFL PAV MRK TY I (Y)(8")(SLD)(100 MIL)	★
V	REFL PAV MRK TY I (W)(DBL ARROW)(100 MIL)	⊙
W	REFL PAV MRK TY I (Y)(MED NOSE)(100 MIL)	⊙

⇨ DIRECTION OF TRAFFIC FLOW

OBJECT MARKER ASSEMBLY (OM-2Z)(FLX)SLF

OBJECT MARKER ASSEMBLY (OM-2X)(WC)GND

DELINEATOR ASSEMBLY (D-SW)(SZ-1)(FLX)GF3

★ TYPE II MARKINGS SHALL BE USED FOR PAVEMENT SEALER. REFER TO SPECIAL SPECIFICATION 6110.

⊙ TYPE II MARKINGS SHALL BE USED FOR PAVEMENT SEALER. REFER TO STANDARD SPECIFICATION 666.

STATE OF TEXAS
JOSE A. SANCHEZ
87890
LICENSED
PROFESSIONAL ENGINEER

08.11.2008
JOSE A. SANCHEZ DATE

NO.	REVISION	BY	DATE
1	LEFT TURN CHANGED. ADJ PAV MRK	JAS	08-08

CP&Y Chiang, Patel & Yerby, Inc.

TEDSI INFRASTRUCTURE GROUP
Consulting Engineers
10999 IH 10 West • Suite 320
San Antonio, Texas 78230
(210) 858-0610

BEXAR COUNTY
PUBLIC WORKS DIVISION

F.M. 2696 (BLANCO ROAD)

PAVEMENT MARKINGS LAYOUT

STA 15+50.00 TO STA 26+50.00

SHEET 2 OF 19

Designed: RC	STATE	BEXAR COUNTY FILE NUMBER	PLAN SET NO. 728
Checked: JAS	TEXAS		OF
Drawn: RC	COUNTY		842
Checked: JAS	BEXAR		

P:\2007\27958-1-Blanco Rd South\Design\CSJ\Traffic\Pavement Markings\6102SSR0SL02.DGN
8/11/2008 4:38:11 PM

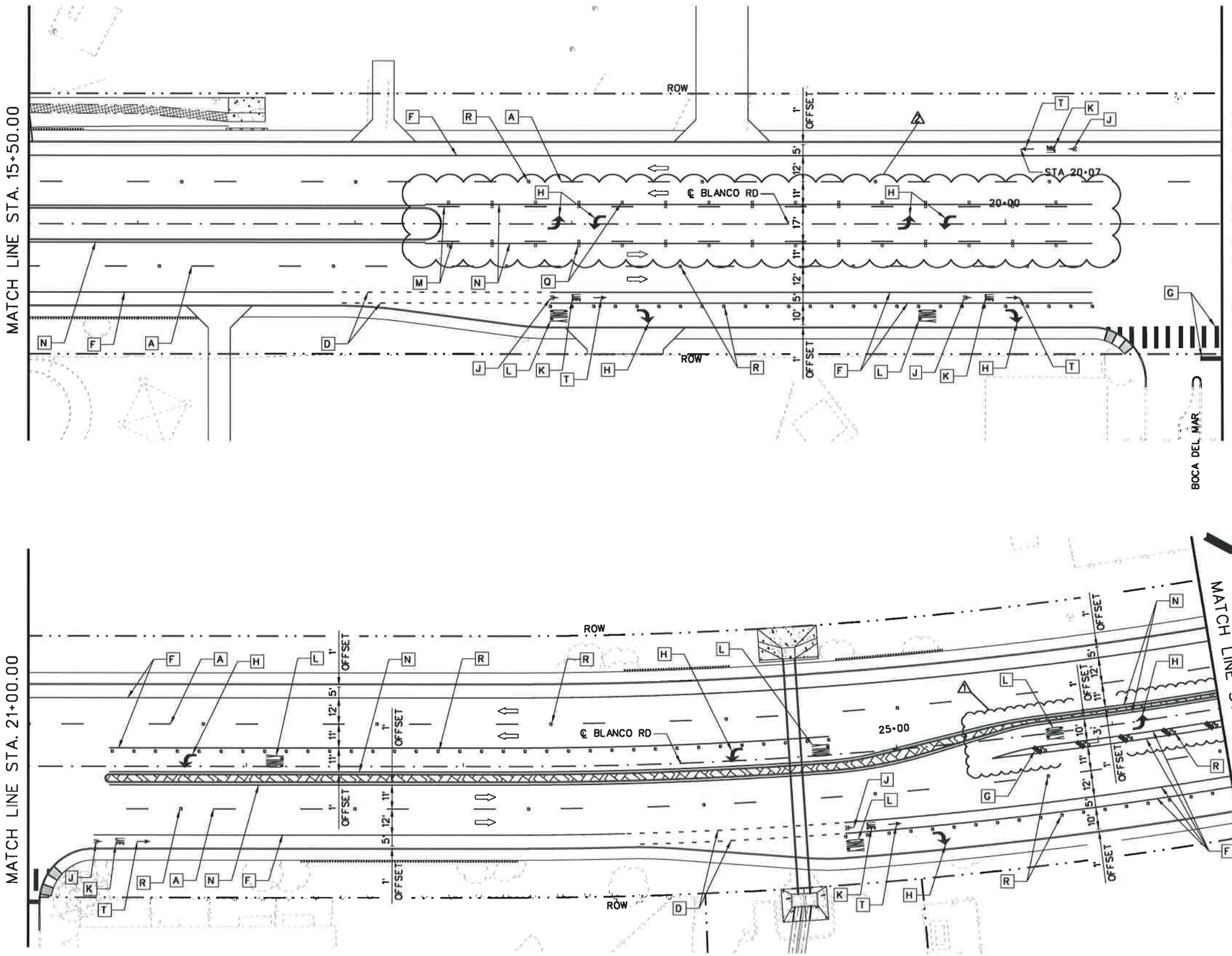

25 12.5 0 25 50
HORIZ. SCALE FEET

LEGEND

A	REFL PAV MRK TY I (W)(4")(BRK)(100 MIL)	★
B	REFL PAV MRK TY I (W)(4")(DOT)(100 MIL)	★
C	REFL PAV MRK TY I (W)(4")(SLD)(100 MIL)	★
D	REFL PAV MRK TY I (W)(8")(DOT)(100 MIL)	★
E	REFL PAV MRK TY I (W)(8")(LNDP)(100 MIL)	★
F	REFL PAV MRK TY I (W)(8")(SLD)(100 MIL)	★
G	REFL PAV MRK TY I (W)(24")(SLD)(100 MIL)	★
H	REFL PAV MRK TY I (W)(ARROW)(100 MIL)	⊙
J	REFL PAV MRK TY I (W)(BIKE SYML)(100MIL)	⊙
K	REFL PAV MRK TY I (W)(BIKE WORD)(100MIL)	⊙
L	REFL PAV MRK TY I (W)(WORD)(100 MIL)	⊙
M	REFL PAV MRK TY I (Y)(4")(BRK)(100 MIL)	★
N	REFL PAV MRK TY I (Y)(4")(SLD)(100 MIL)	★
P	REFL PAV MRK TY I (Y)(24")(SLD)(100 MIL)	★
Q	REFL PAV MRKR TY II-A-A	
R	REFL PAV MRKR TY II-C-R	
S	REFL PAV MRKR TY I-C	
T	REFL PAV MRK TY I (W)(BIKE ARROW)(100MIL)	⊙
U	REFL PAV MRK TY I (Y)(8")(SLD)(100 MIL)	★
V	REFL PAV MRK TY I (W)(DBL ARROW)(100 MIL)	⊙
W	REFL PAV MRK TY I (Y)(MED NOSE)(100 MIL)	⊙

⇨ DIRECTION OF TRAFFIC FLOW

OBJECT MARKER ASSEMBLY (OM-2Z)(FLX)SLF

OBJECT MARKER ASSEMBLY (OM-2X)(WC)GND

DELINEATOR ASSEMBLY (D-SW)(SZ-1)(FLX)GF3

★ TYPE II MARKINGS SHALL BE USED FOR PAVEMENT SEALER. REFER TO SPECIAL SPECIFICATION 6110.

⊙ TYPE II MARKINGS SHALL BE USED FOR PAVEMENT SEALER. REFER TO STANDARD SPECIFICATION 666.

THE SEAL APPEARING BELOW WAS ORIGINALLY AUTHORIZED BY JOSE A. SANCHEZ, PE 87890 ON DEC. 7, 2007. ALTERATION OF A SEALED DOCUMENT WITHOUT PROPER NOTIFICATION TO THE RESPONSIBLE ENGINEER IS AN OFFENSE UNDER THE TEXAS ENGINEERING PRACTICE ACT.

THE SEAL APPEARING BELOW IS FOR MODIFICATIONS DUE TO FIELD ALTERATIONS

STATE OF TEXAS — JOSE A. SANCHEZ — 87890 — LICENSED — PROFESSIONAL ENGINEER

STATE OF TEXAS — REGINALD FOUNTAIN — 97328 — LICENSED — PROFESSIONAL ENGINEER

NO.	REVISION	BY	DATE
1	LEFT TURN CHANGED. ADJ PAV MRK	JAS	08-08
2	MODIFICATIONS TO MEDIAN	RTF	07-10

CP&Y Chiang, Patel & Yerby, Inc.

TEDSI INFRASTRUCTURE GROUP
Consulting Engineers
10999 IH 10 West • Suite 320
San Antonio, Texas 78230
(210) 858-0610

BEXAR COUNTY
PUBLIC WORKS DIVISION

F.M. 2696 (BLANCO ROAD)

PAVEMENT MARKINGS LAYOUT

STA 15+50.00 TO STA 26+50.00

SHEET 2 OF 19

Designed: RC	STATE	BEXAR COUNTY FILE NUMBER	PLAN SET NO.
Checked: JAS	TEXAS		728
Drawn: RC	COUNTY		OF
Checked: JAS	BEXAR		842

c:\pwworking\rfountain\dms14570\6102SSROSL02.DGN
9:21:18 AM
12/28/2010

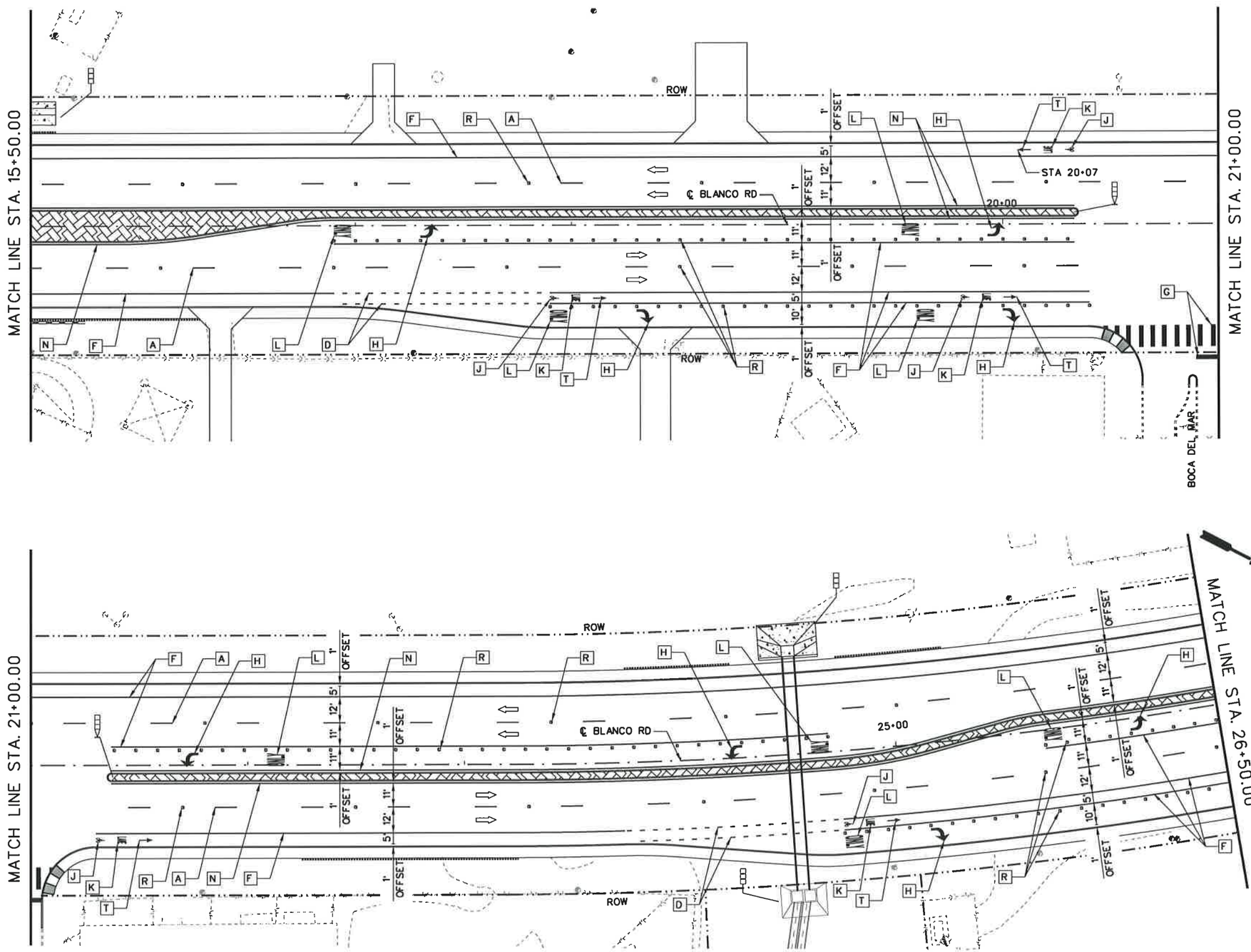

25 12.5 0 25 50
HORIZ. SCALE FEET

LEGEND

A	REFL PAV MRK TY I (W)(4")(BRK)(100 MIL)	★
B	REFL PAV MRK TY I (W)(4")(DOT)(100 MIL)	★
C	REFL PAV MRK TY I (W)(4")(SLD)(100 MIL)	★
D	REFL PAV MRK TY I (W)(8")(DOT)(100 MIL)	★
E	REFL PAV MRK TY I (W)(8")(LNDP)(100 MIL)	★
F	REFL PAV MRK TY I (W)(8")(SLD)(100 MIL)	★
G	REFL PAV MRK TY I (W)(24")(SLD)(100 MIL)	★
H	REFL PAV MRK TY I (W)(ARROW)(100 MIL)	⊙
J	REFL PAV MRK TY I (W)(BIKE SYML)(100MIL)	⊙
K	REFL PAV MRK TY I (W)(BIKE WORD)(100MIL)	⊙
L	REFL PAV MRK TY I (W)(WORD)(100 MIL)	⊙
M	REFL PAV MRK TY I (Y)(4")(BRK)(100 MIL)	★
N	REFL PAV MRK TY I (Y)(4")(SLD)(100 MIL)	★
P	REFL PAV MRK TY I (Y)(24")(SLD)(100 MIL)	★
Q	REFL PAV MRKR TY II-A-A	
R	REFL PAV MRKR TY II-C-R	
S	REFL PAV MRKR TY I-C	
T	REFL PAV MRK TY I (W)(BIKE ARROW)(100MIL)	⊙
U	REFL PAV MRK TY I (Y)(8")(SLD)(100 MIL)	★
V	REFL PAV MRK TY I (W)(DBL ARROW)(100 MIL)	⊙
W	REFL PAV MRK TY I (Y)(MED NOSE)(100 MIL)	⊙

⇨ DIRECTION OF TRAFFIC FLOW

OBJECT MARKER ASSEMBLY (OM-2Z)(FLX)SLF

OBJECT MARKER ASSEMBLY (OM-2X)(WC)GND

DELINEATOR ASSEMBLY (D-SW)(SZ-1)(FLX)GF3

★ TYPE II MARKINGS SHALL BE USED FOR PAVEMENT SEALER. REFER TO SPECIAL SPECIFICATION 6110.

⊙ TYPE II MARKINGS SHALL BE USED FOR PAVEMENT SEALER. REFER TO STANDARD SPECIFICATION 666.

STATE OF TEXAS
JOSE A. SANCHEZ
87890
LICENSED
PROFESSIONAL ENGINEER

2007.12.07

JOSE A. SANCHEZ DATE

NO.	REVISION	BY	DATE

CP&Y Chiang, Patel & Yerby, Inc.

TEDSI INFRASTRUCTURE GROUP
Consulting Engineers
10999 IH 10 West • Suite 320
San Antonio, Texas 78230
(210) 858-0610

BEXAR COUNTY
PUBLIC WORKS DIVISION

F.M. 2696 (BLANCO ROAD)

PAVEMENT MARKINGS LAYOUT

STA 15+50.00 TO STA 26+50.00

SHEET 2 OF 19

Designed: RC	STATE	BEXAR COUNTY FILE NUMBER	PLAN SET NO.
Checked: JAS	TEXAS		726
Drawn: RC	COUNTY		OF
Checked: JAS	BEXAR		842

p:\2007\27958-1-blanco rd south\design\es\Traffic\Pavement Markings\6102SSROSL02.DGN
12/7/2007 1:48:53 PM

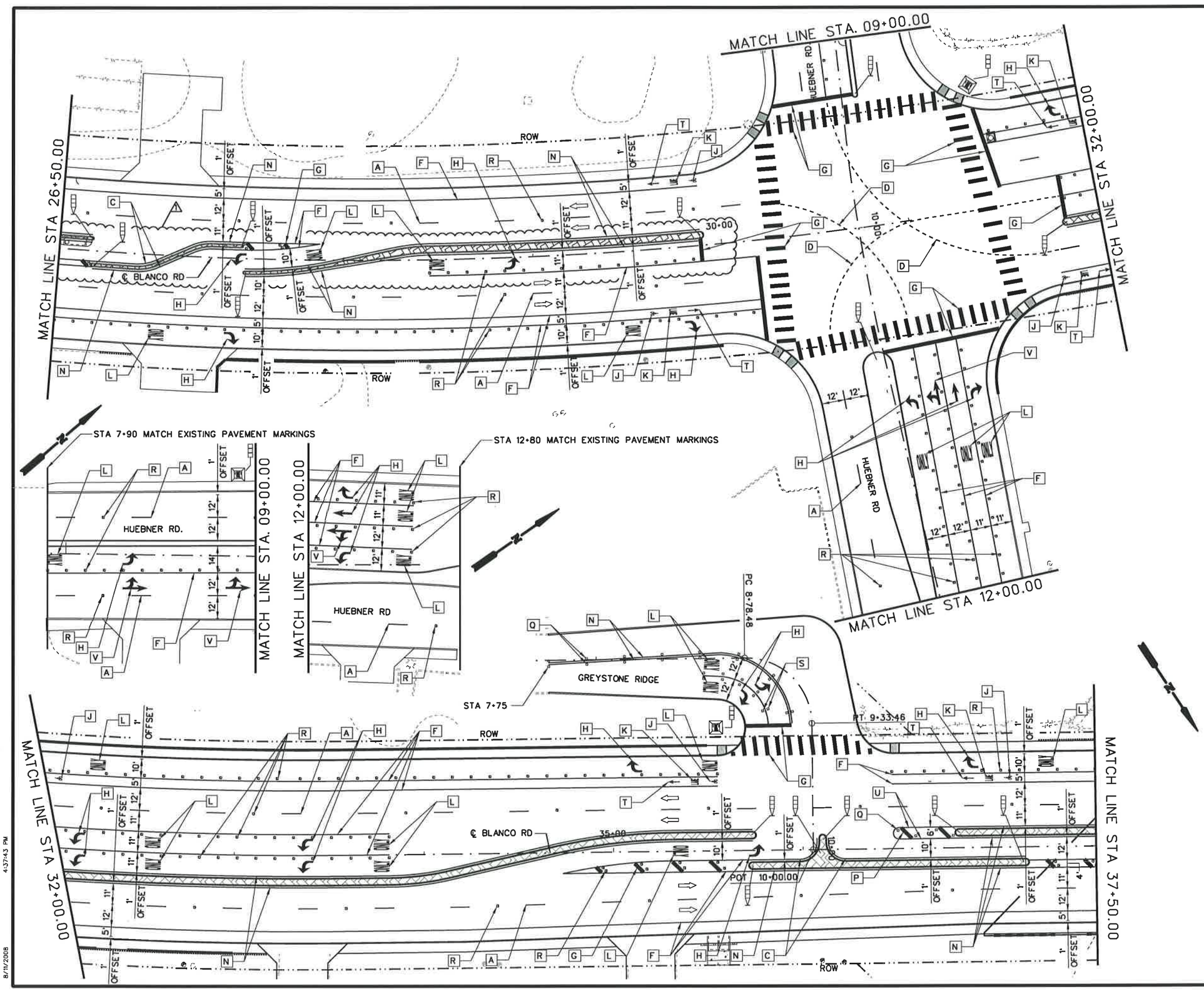

LEGEND

A	REFL PAV MRK TY I (W)(4")(BRK)(100 MIL)	★
B	REFL PAV MRK TY I (W)(4")(DOT)(100 MIL)	★
C	REFL PAV MRK TY I (W)(4")(SLD)(100 MIL)	★
D	REFL PAV MRK TY I (W)(8")(DOT)(100 MIL)	★
E	REFL PAV MRK TY I (W)(8")(LNDP)(100 MIL)	★
F	REFL PAV MRK TY I (W)(8")(SLD)(100 MIL)	★
G	REFL PAV MRK TY I (W)(24")(SLD)(100 MIL)	★
H	REFL PAV MRK TY I (W)(ARROW)(100 MIL)	⊙
J	REFL PAV MRK TY I (W)(BIKE SYML)(100MIL)	⊙
K	REFL PAV MRK TY I (W)(BIKE WORD)(100MIL)	⊙
L	REFL PAV MRK TY I (W)(WORD)(100 MIL)	⊙
M	REFL PAV MRK TY I (Y)(4")(BRK)(100 MIL)	★
N	REFL PAV MRK TY I (Y)(4")(SLD)(100 MIL)	★
P	REFL PAV MRK TY I (Y)(24")(SLD)(100 MIL)	★
Q	REFL PAV MRKR TY II-A-A	
R	REFL PAV MRKR TY II-C-R	
S	REFL PAV MRKR TY I-C	
T	REFL PAV MRK TY I (W)(BIKE ARROW)(100MIL)	⊙
U	REFL PAV MRK TY I (Y)(8")(SLD)(100 MIL)	★
V	REFL PAV MRK TY I (W)(DBL ARROW)(100 MIL)	⊙
W	REFL PAV MRK TY I (Y)(MED NOSE)(100 MIL)	⊙

⇨ DIRECTION OF TRAFFIC FLOW

OBJECT MARKER ASSEMBLY (OM-2Z)(FLX)SLF

OBJECT MARKER ASSEMBLY (OM-2X)(WC)GND

DELINEATOR ASSEMBLY (D-SW)(SZ-1)(FLX)GF3

★ TYPE II MARKINGS SHALL BE USED FOR PAVEMENT SEALER. REFER TO SPECIAL SPECIFICATION 6110.

⊙ TYPE II MARKINGS SHALL BE USED FOR PAVEMENT SEALER. REFER TO STANDARD SPECIFICATION 666.

STATE OF TEXAS
JOSE A. SANCHEZ
87890
LICENSED
PROFESSIONAL ENGINEER

JOSE A. SANCHEZ — DATE 08.11.2008

NO.	REVISION	BY	DATE
1	LEFT TURN CHANGED. ADJ PAV MRK	JAS	08-08

CP&Y Chiang, Patel & Yerby, Inc.

TEDSI INFRASTRUCTURE GROUP
Consulting Engineers
10999 IH 10 West • Suite 320
San Antonio, Texas 78230
(210) 858-0610

BEXAR COUNTY
PUBLIC WORKS DIVISION

F.M. 2696 (BLANCO ROAD)

PAVEMENT MARKINGS LAYOUT

STA 26+50.00 TO STA 37+50.00

SHEET 3 OF 19

Designed: RC	STATE	BEXAR COUNTY FILE NUMBER	PLAN SET NO.
Checked: JAS	TEXAS		729
Drawn: RC	COUNTY		OF
Checked: JAS	BEXAR		842

P:\2007\27958-1-Blanco Rd South\Design\CSJ\Traffic\Pavement Markings\61D2SSRDSL03.DGN
8/11/2008 4:37:43 PM

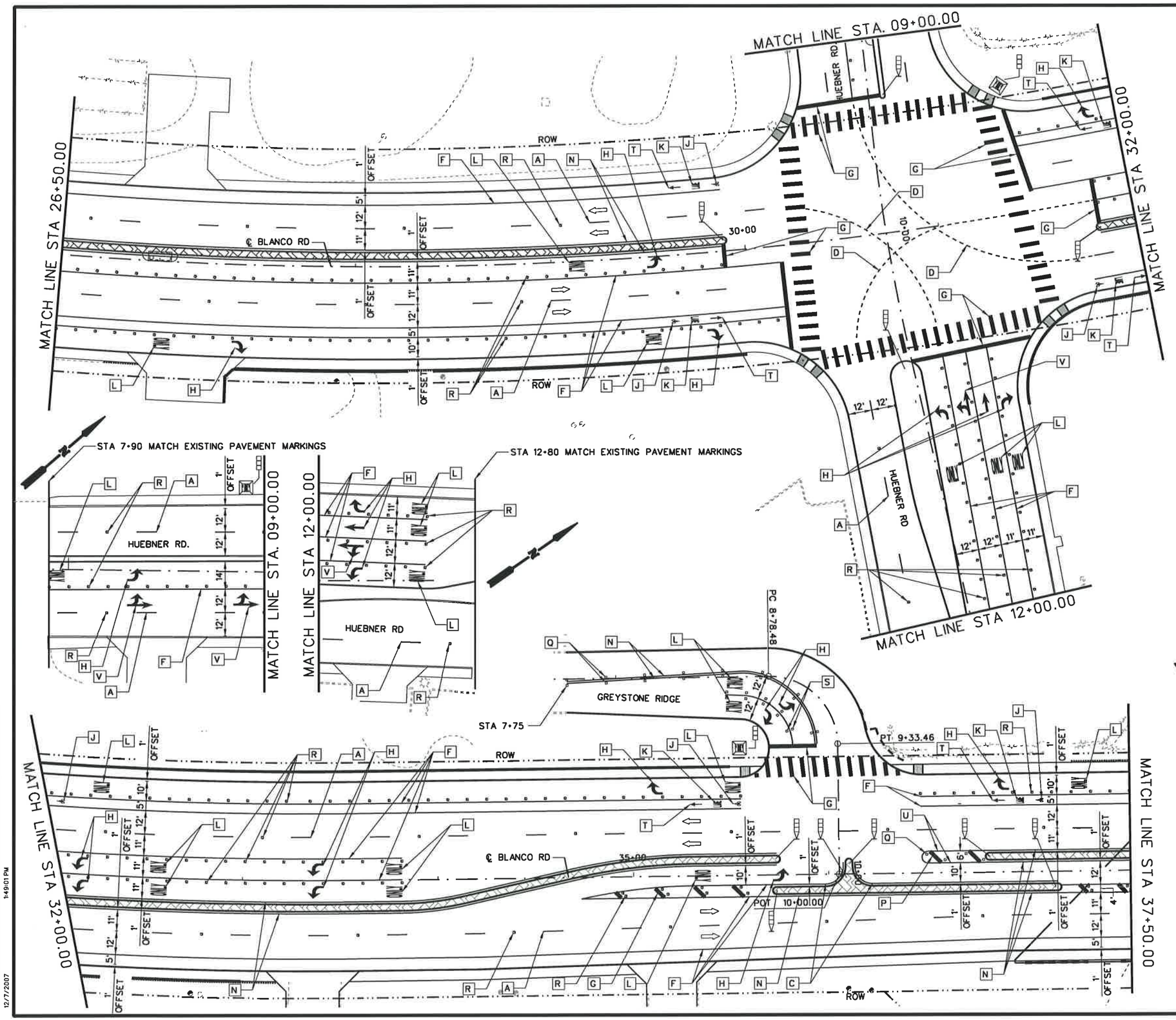

25 12.5 0 25 50
HORIZ. SCALE FEET

LEGEND

A	REFL PAV MRK TY I (W)(4")(BRK)(100 MIL)	★
B	REFL PAV MRK TY I (W)(4")(DOT)(100 MIL)	★
C	REFL PAV MRK TY I (W)(4")(SLD)(100 MIL)	★
D	REFL PAV MRK TY I (W)(8")(DOT)(100 MIL)	★
E	REFL PAV MRK TY I (W)(8")(LNDP)(100 MIL)	★
F	REFL PAV MRK TY I (W)(8")(SLD)(100 MIL)	★
G	REFL PAV MRK TY I (W)(24")(SLD)(100 MIL)	★
H	REFL PAV MRK TY I (W)(ARROW)(100 MIL)	⊙
J	REFL PAV MRK TY I (W)(BIKE SYML)(100MIL)	⊙
K	REFL PAV MRK TY I (W)(BIKE WORD)(100MIL)	⊙
L	REFL PAV MRK TY I (W)(WORD)(100 MIL)	⊙
M	REFL PAV MRK TY I (Y)(4")(BRK)(100 MIL)	★
N	REFL PAV MRK TY I (Y)(4")(SLD)(100 MIL)	★
P	REFL PAV MRK TY I (Y)(24")(SLD)(100 MIL)	★
Q	REFL PAV MRKR TY II-A-A	
R	REFL PAV MRKR TY II-C-R	
S	REFL PAV MRKR TY I-C	
T	REFL PAV MRK TY I (W)(BIKE ARROW)(100MIL)	⊙
U	REFL PAV MRK TY I (Y)(8")(SLD)(100 MIL)	★
V	REFL PAV MRK TY I (W)(DBL ARROW)(100 MIL)	⊙
W	REFL PAV MRK TY I (Y)(MED NOSE)(100 MIL)	⊙

⇨ DIRECTION OF TRAFFIC FLOW

OBJECT MARKER ASSEMBLY (OM-2Z)(FLX)SLF

OBJECT MARKER ASSEMBLY (OM-2X)(WC)GND

DELINEATOR ASSEMBLY (D-SW)(SZ-1)(FLX)GF3

★ TYPE II MARKINGS SHALL BE USED FOR PAVEMENT SEALER. REFER TO SPECIAL SPECIFICATION 6110.

⊙ TYPE II MARKINGS SHALL BE USED FOR PAVEMENT SEALER. REFER TO STANDARD SPECIFICATION 666.

STATE OF TEXAS
JOSE A. SANCHEZ
87890
LICENSED
PROFESSIONAL ENGINEER

2007.12.07

JOSE A. SANCHEZ DATE

NO.	REVISION	BY	DATE

CP&Y Chiang, Patel & Yerby, Inc.

TEDSI INFRASTRUCTURE GROUP
Consulting Engineers
10999 IH 10 West ♦ Suite 320
San Antonio, Texas 78230
(210) 858-0610

BEXAR COUNTY
PUBLIC WORKS DIVISION

F.M. 2696 (BLANCO ROAD)

PAVEMENT MARKINGS LAYOUT

STA 26+50.00 TO STA 37+50.00

SHEET 3 OF 19

Designed: RC	STATE	BEXAR COUNTY FILE NUMBER	PLAN SET NO.
Checked: JAS	TEXAS		729
Drawn: RC	COUNTY		OF
Checked: JAS	BEXAR		842

p:\2007\27958-1-blanco rd south\design\cs\Traffic\Pavement Markings\61025SSRDSL03.DGN
1:49:01 PM
12/7/2007

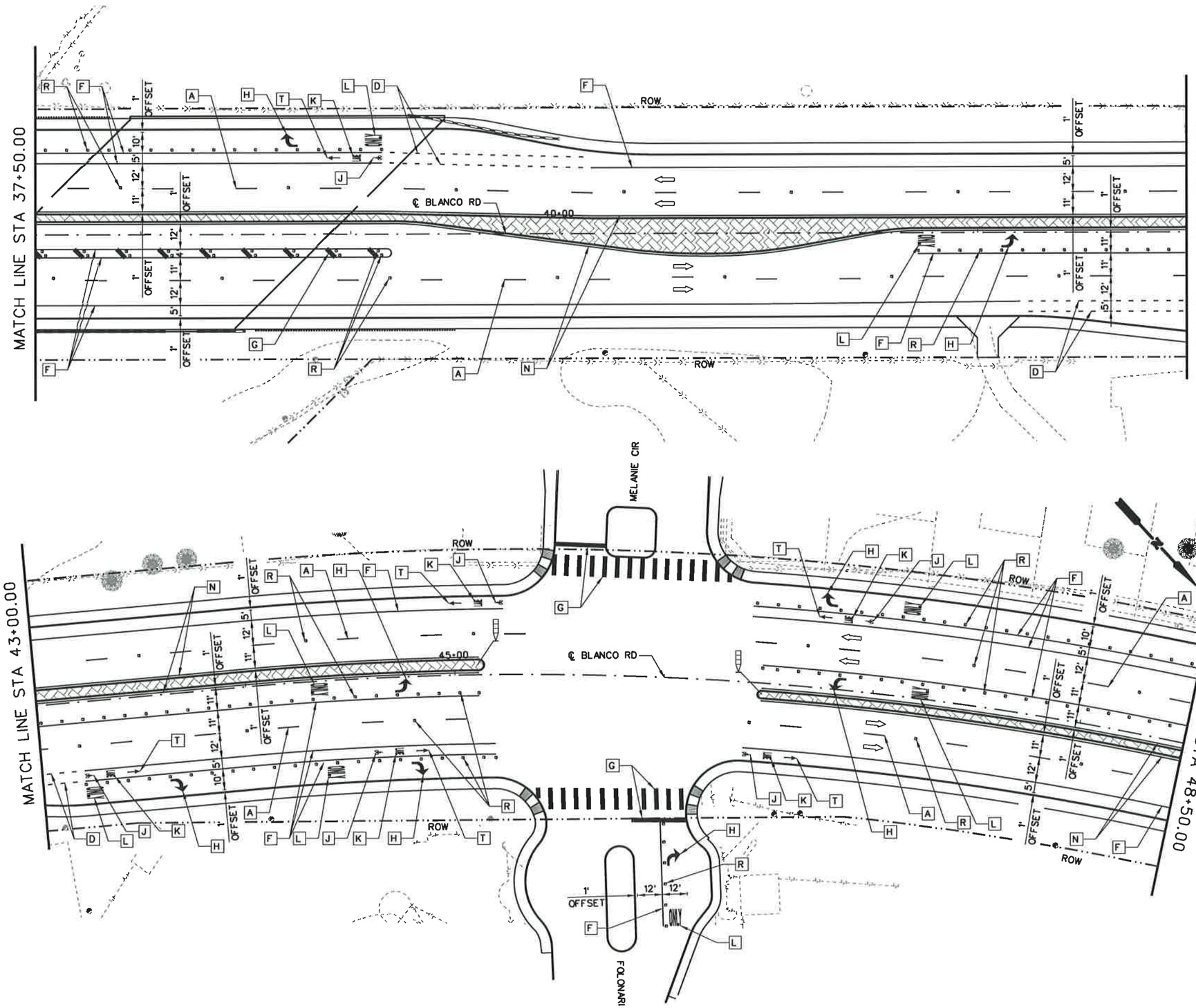

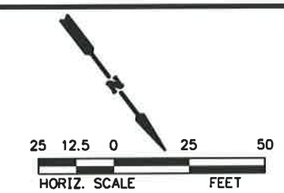

LEGEND

A	REFL PAV MRK TY I (W)(4")(BRK)(100 MIL) ★
B	REFL PAV MRK TY I (W)(4")(DOT)(100 MIL) ★
C	REFL PAV MRK TY I (W)(4")(SLD)(100 MIL) ★
D	REFL PAV MRK TY I (W)(8")(DOT)(100 MIL) ★
E	REFL PAV MRK TY I (W)(8")(LNDP)(100 MIL) ★
F	REFL PAV MRK TY I (W)(8")(SLD)(100 MIL) ★
G	REFL PAV MRK TY I (W)(24")(SLD)(100 MIL) ★
H	REFL PAV MRK TY I (W)(ARROW)(100 MIL) ⊙
J	REFL PAV MRK TY I (W)(BIKE SYML)(100MIL) ⊙
K	REFL PAV MRK TY I (W)(BIKE WORD)(100MIL) ⊙
L	REFL PAV MRK TY I (W)(WORD)(100 MIL) ⊙
M	REFL PAV MRK TY I (Y)(4")(BRK)(100 MIL) ★
N	REFL PAV MRK TY I (Y)(4")(SLD)(100 MIL) ★
P	REFL PAV MRK TY I (Y)(24")(SLD)(100 MIL) ★
Q	REFL PAV MRKR TY II-A-A
R	REFL PAV MRKR TY II-C-R
S	REFL PAV MRKR TY I-C
T	REFL PAV MRK TY I (W)(BIKE ARROW)(100MIL) ⊙
U	REFL PAV MRK TY I (Y)(8")(SLD)(100 MIL) ★
V	REFL PAV MRK TY I (W)(DBL ARROW)(100 MIL) ⊙
W	REFL PAV MRK TY I (Y)(MED NOSE)(100 MIL) ⊙

⇨ DIRECTION OF TRAFFIC FLOW

OBJECT MARKER ASSEMBLY (OM-2Z)(FLX)SLF

OBJECT MARKER ASSEMBLY (OM-2X)(WC)GND

DELINEATOR ASSEMBLY (D-SW)(SZ-1)(FLX)GF3

★ TYPE II MARKINGS SHALL BE USED FOR PAVEMENT SEALER. REFER TO SPECIAL SPECIFICATION 6110.

⊙ TYPE II MARKINGS SHALL BE USED FOR PAVEMENT SEALER. REFER TO STANDARD SPECIFICATION 666.

STATE OF TEXAS
JOSE A. SANCHEZ
87890
LICENSED
PROFESSIONAL ENGINEER

2007.12.07

JOSE A. SANCHEZ — DATE

NO.	REVISION	BY	DATE

CP&Y Chiang, Patel & Yerby, Inc.

TEDSI INFRASTRUCTURE GROUP
Consulting Engineers
10999 IH 10 West • Suite 320
San Antonio, Texas 78230
(210) 858-0610

BEXAR COUNTY
PUBLIC WORKS DIVISION

F.M. 2696 (BLANCO ROAD)

PAVEMENT MARKINGS LAYOUT

STA 37+50.00 TO STA 48+50.00

SHEET 4 OF 19

Designed: RC	STATE	BEXAR COUNTY FILE NUMBER	PLAN SET
Checked: JAS	TEXAS		730
Drawn: RC	COUNTY		OF
Checked: JAS	BEXAR		842

p:\2007\27958-1-blanco rd south\design\csj\Traffic\Pavement Markings\61025SRDSL04.DGN
12/7/2007 1:49:08 PM

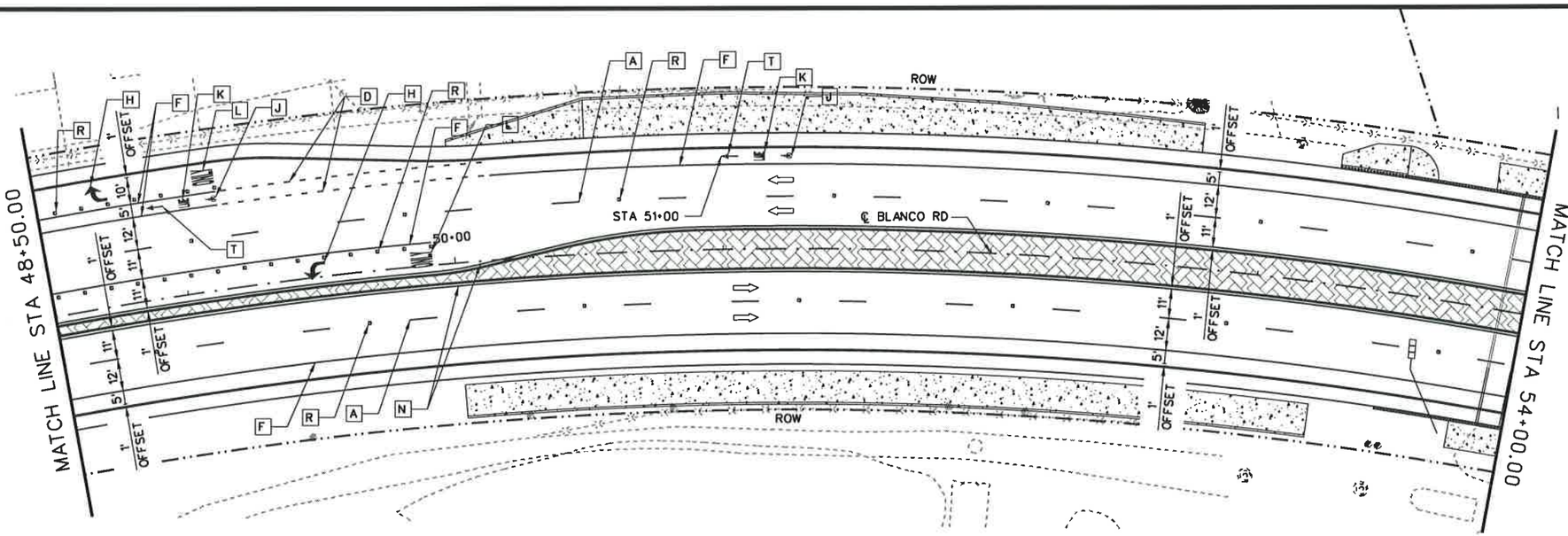

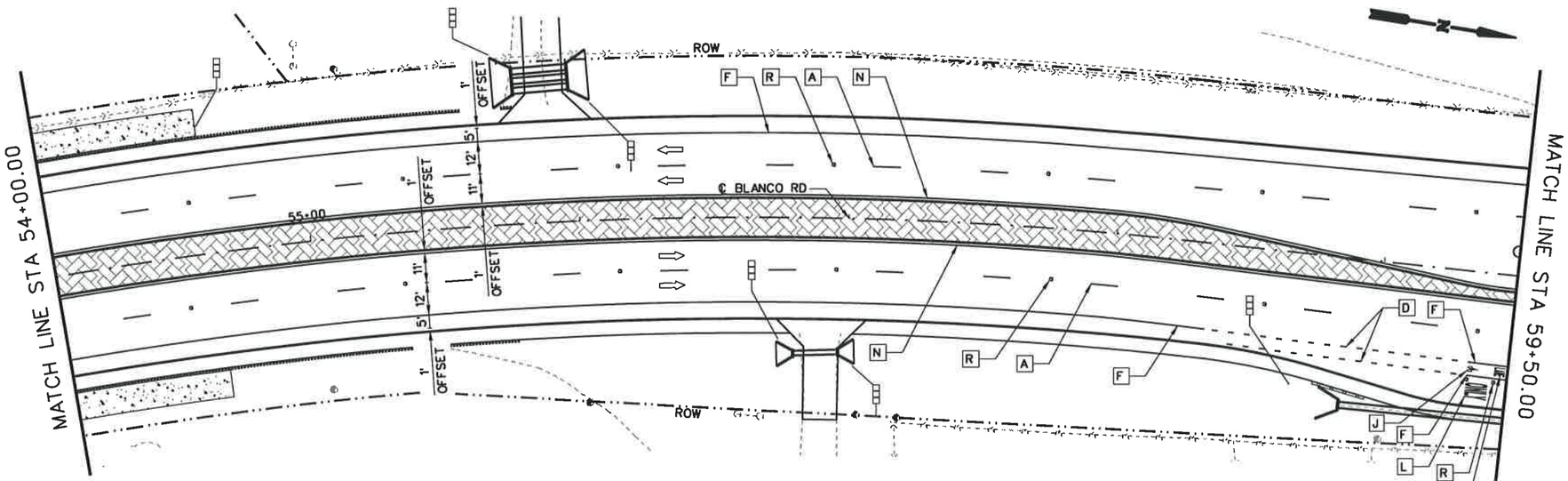

25 12.5 0 25 50
HORIZ. SCALE FEET

LEGEND

A	REFL PAV MRK TY I (W)(4")(BRK)(100 MIL)	★
B	REFL PAV MRK TY I (W)(4")(DOT)(100 MIL)	★
C	REFL PAV MRK TY I (W)(4")(SLD)(100 MIL)	★
D	REFL PAV MRK TY I (W)(8")(DOT)(100 MIL)	★
E	REFL PAV MRK TY I (W)(8")(LNDP)(100 MIL)	★
F	REFL PAV MRK TY I (W)(8")(SLD)(100 MIL)	★
G	REFL PAV MRK TY I (W)(24")(SLD)(100 MIL)	★
H	REFL PAV MRK TY I (W)(ARROW)(100 MIL)	⊙
J	REFL PAV MRK TY I (W)(BIKE SYML)(100MIL)	⊙
K	REFL PAV MRK TY I (W)(BIKE WORD)(100MIL)	⊙
L	REFL PAV MRK TY I (W)(WORD)(100 MIL)	⊙
M	REFL PAV MRK TY I (Y)(4")(BRK)(100 MIL)	★
N	REFL PAV MRK TY I (Y)(4")(SLD)(100 MIL)	★
P	REFL PAV MRK TY I (Y)(24")(SLD)(100 MIL)	★
Q	REFL PAV MRKR TY II-A-A	
R	REFL PAV MRKR TY II-C-R	
S	REFL PAV MRKR TY I-C	
T	REFL PAV MRK TY I (W)(BIKE ARROW)(100MIL)	⊙
U	REFL PAV MRK TY I (Y)(8")(SLD)(100 MIL)	★
V	REFL PAV MRK TY I (W)(DBL ARROW)(100 MIL)	⊙
W	REFL PAV MRK TY I (Y)(MED NOSE)(100 MIL)	⊙

⇨ DIRECTION OF TRAFFIC FLOW

OBJECT MARKER ASSEMBLY (OM-2Z)(FLX)SLF

OBJECT MARKER ASSEMBLY (OM-2X)(WC)GND

DELINEATOR ASSEMBLY (D-SW)(SZ-1)(FLX)GF3

★ TYPE II MARKINGS SHALL BE USED FOR PAVEMENT SEALER. REFER TO SPECIAL SPECIFICATION 6110.

⊙ TYPE II MARKINGS SHALL BE USED FOR PAVEMENT SEALER. REFER TO STANDARD SPECIFICATION 666.

STATE OF TEXAS
JOSE A. SANCHEZ
87890
LICENSED
PROFESSIONAL ENGINEER

2007.12.07

JOSE A. SANCHEZ DATE

NO.	REVISION	BY	DATE

CP&Y Chiang, Patel & Yerby, Inc.

TEDSI INFRASTRUCTURE GROUP
Consulting Engineers
10999 IH 10 West • Suite 330
San Antonio, Texas 78230
(210) 858-8610

BEXAR COUNTY
PUBLIC WORKS DIVISION

F.M. 2696 (BLANCO ROAD)

PAVEMENT MARKINGS LAYOUT

STA 48+50.00 TO STA 59+50.00

SHEET 5 OF 19

Designed: RC	STATE	BEXAR COUNTY FILE NUMBER	PLAN SET 731 OF 842
Checked: JAS	TEXAS		
Drawn: RC	COUNTY		
Checked: JAS	BEXAR		

p:\2007\27958-1-blanco rd south\design\cs\Traffic\Pavement Markings\6102SSR05L05.DGN
12/7/2007 1:49:13 PM

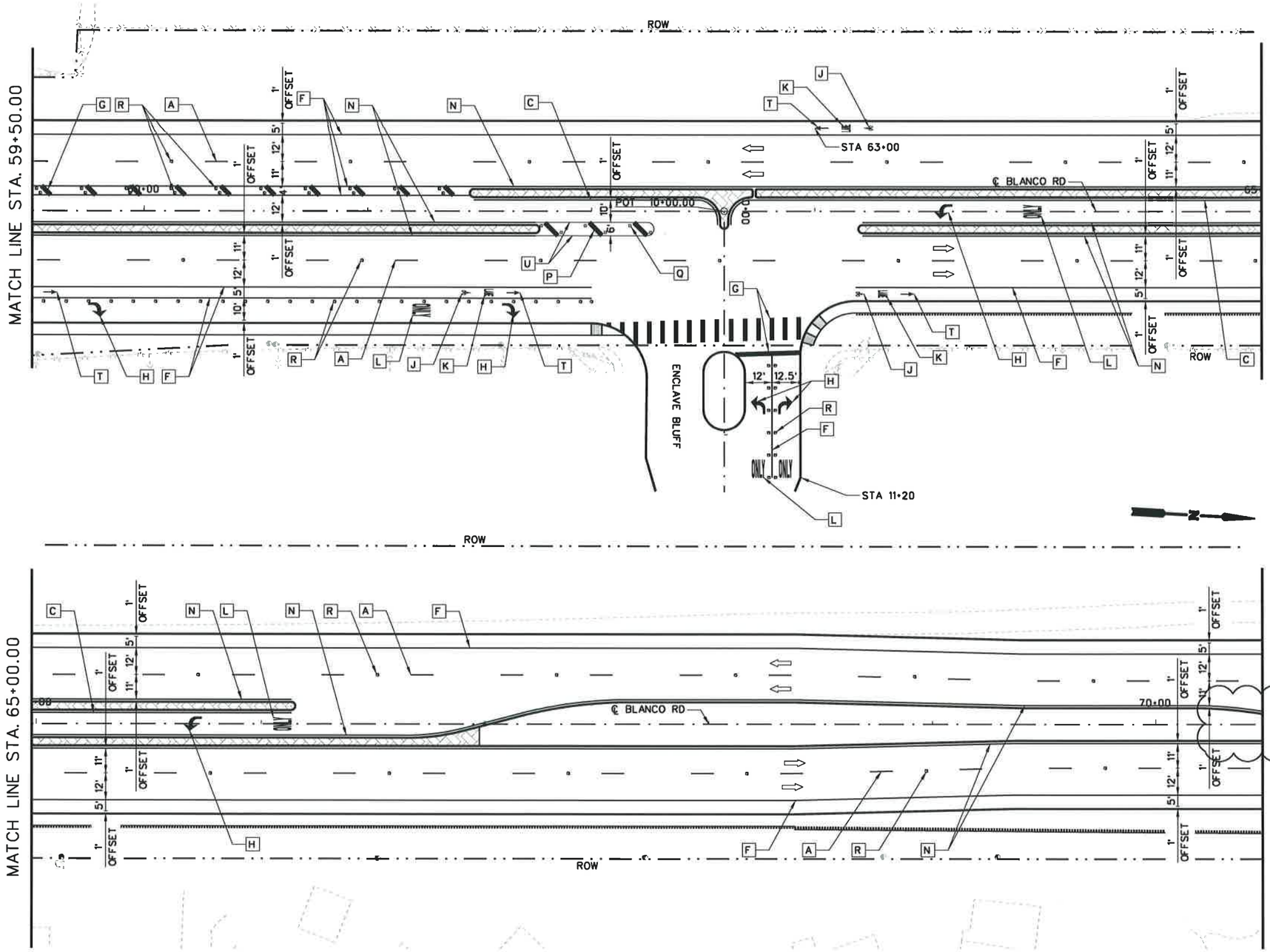

25 12.5 0 25 50
HORIZ. SCALE FEET

LEGEND

A	REFL PAV MRK TY I (W)(4")(BRK)(100 MIL)	★
B	REFL PAV MRK TY I (W)(4")(DOT)(100 MIL)	★
C	REFL PAV MRK TY I (W)(4")(SLD)(100 MIL)	★
D	REFL PAV MRK TY I (W)(8")(DOT)(100 MIL)	★
E	REFL PAV MRK TY I (W)(8")(LNDP)(100 MIL)	★
F	REFL PAV MRK TY I (W)(8")(SLD)(100 MIL)	★
G	REFL PAV MRK TY I (W)(24")(SLD)(100 MIL)	★
H	REFL PAV MRK TY I (W)(ARROW)(100 MIL)	⊙
J	REFL PAV MRK TY I (W)(BIKE SYML)(100MIL)	⊙
K	REFL PAV MRK TY I (W)(BIKE WORD)(100MIL)	⊙
L	REFL PAV MRK TY I (W)(WORD)(100 MIL)	⊙
M	REFL PAV MRK TY I (Y)(4")(BRK)(100 MIL)	★
N	REFL PAV MRK TY I (Y)(4")(SLD)(100 MIL)	★
P	REFL PAV MRK TY I (Y)(24")(SLD)(100 MIL)	★
Q	REFL PAV MRKR TY II-A-A	
R	REFL PAV MRKR TY II-C-R	
S	REFL PAV MRKR TY I-C	
T	REFL PAV MRK TY I (W)(BIKE ARROW)(100MIL)	⊙
U	REFL PAV MRK TY I (Y)(8")(SLD)(100 MIL)	★
V	REFL PAV MRK TY I (W)(DBL ARROW)(100 MIL)	⊙
W	REFL PAV MRK TY I (Y)(MED NOSE)(100 MIL)	⊙

⇨ DIRECTION OF TRAFFIC FLOW

OBJECT MARKER ASSEMBLY (OM-2Z)(FLX)SLF

OBJECT MARKER ASSEMBLY (OM-2X)(WC)GND

DELINEATOR ASSEMBLY (D-SW)(SZ-1)(FLX)GF3

★ TYPE II MARKINGS SHALL BE USED FOR PAVEMENT SEALER. REFER TO SPECIAL SPECIFICATION 6110.

⊙ TYPE II MARKINGS SHALL BE USED FOR PAVEMENT SEALER. REFER TO STANDARD SPECIFICATION 666.

THE SEAL APPEARING BELOW WAS ORIGINALLY AUTHORIZED BY JOSE A. SANCHEZ, PE 87890 ON DEC. 7, 2007. ALTERATION OF A SEALED DOCUMENT WITHOUT PROPER NOTIFICATION TO THE RESPONSIBLE ENGINEER IS AN OFFENSE UNDER THE TEXAS ENGINEERING PRACTICE ACT.

THE SEAL APPEARING BELOW IS FOR MODIFICATIONS DUE TO FIELD ALTERATIONS

STATE OF TEXAS JOSE A. SANCHEZ 87890 LICENSED PROFESSIONAL ENGINEER

Reginald Fountain, P.E. 7/9/10

STATE OF TEXAS REGINALD FOUNTAIN 97328 LICENSED PROFESSIONAL ENGINEER

NO.	REVISION	BY	DATE
2	MODIFICATIONS TO MEDIAN	RTF	07-10

CP&Y Chiang, Patel & Yerby, Inc.

TEDSI INFRASTRUCTURE GROUP
Consulting Engineers
10999 IH 10 West • Suite 320
San Antonio, Texas 78230
(210) 858-8610

BEXAR COUNTY
PUBLIC WORKS DIVISION

F.M. 2696 (BLANCO ROAD)

PAVEMENT MARKINGS LAYOUT

STA 59+50.00 TO STA 70+50.00

SHEET 6 OF 19

Designed: RC	STATE	BEXAR COUNTY FILE NUMBER	PLAN SET NO.
Checked: JAS	TEXAS		732
Drawn: RC	COUNTY		OF
Checked: JAS	BEXAR		842

c:\pwworking\rfountain\dms14570\61022SSR05L06.DGN
12/28/2010 9:22:29 AM

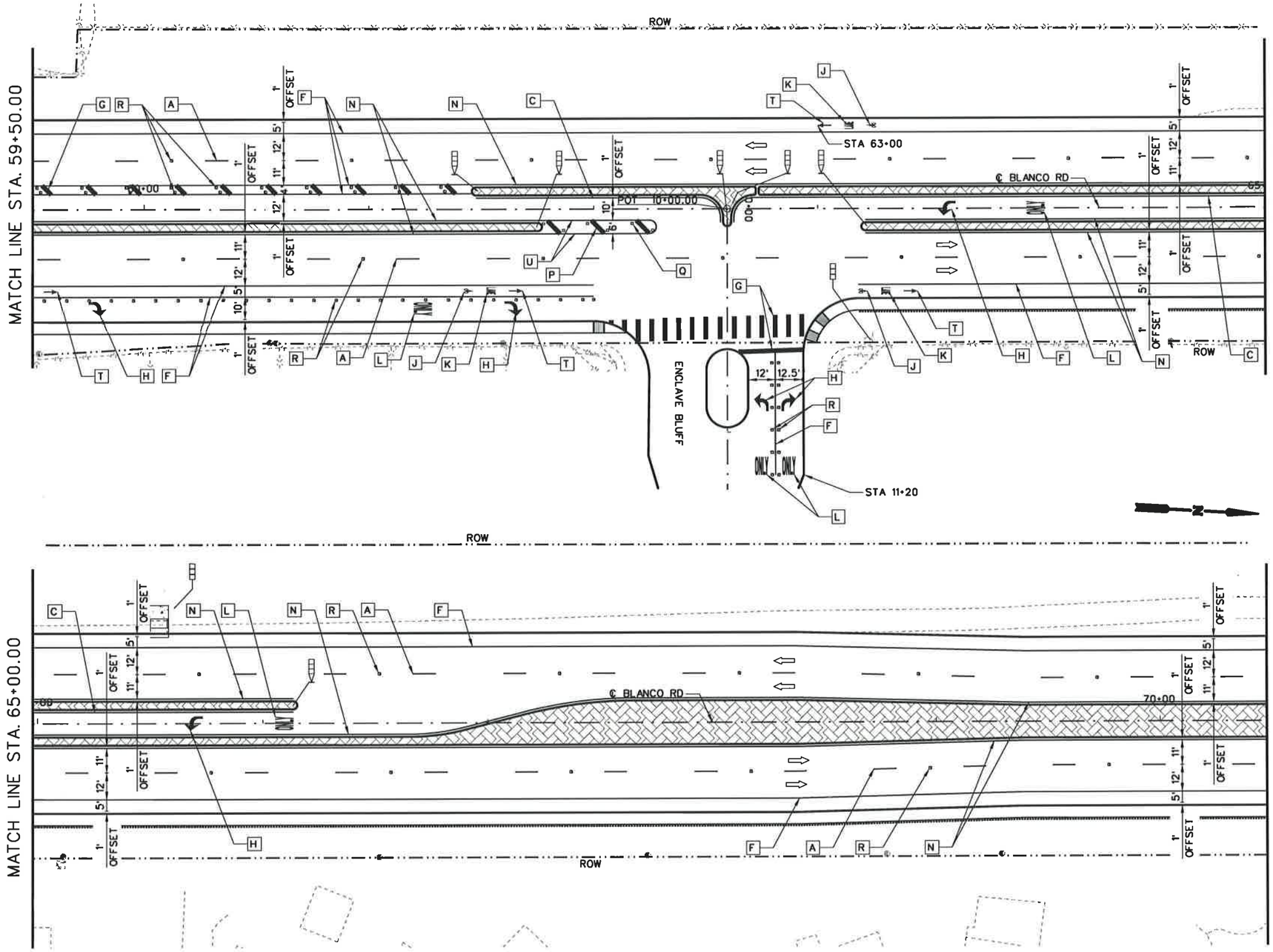

25 12.5 0 25 50
HORIZ. SCALE FEET

LEGEND

A	REFL PAV MRK TY I (W)(4")(BRK)(100 MIL)	★
B	REFL PAV MRK TY I (W)(4")(DOT)(100 MIL)	★
C	REFL PAV MRK TY I (W)(4")(SLD)(100 MIL)	★
D	REFL PAV MRK TY I (W)(8")(DOT)(100 MIL)	★
E	REFL PAV MRK TY I (W)(8")(LNDP)(100 MIL)	★
F	REFL PAV MRK TY I (W)(8")(SLD)(100 MIL)	★
G	REFL PAV MRK TY I (W)(24")(SLD)(100 MIL)	★
H	REFL PAV MRK TY I (W)(ARROW)(100 MIL)	⊙
J	REFL PAV MRK TY I (W)(BIKE SYML)(100MIL)	⊙
K	REFL PAV MRK TY I (W)(BIKE WORD)(100MIL)	⊙
L	REFL PAV MRK TY I (W)(WORD)(100 MIL)	⊙
M	REFL PAV MRK TY I (Y)(4")(BRK)(100 MIL)	★
N	REFL PAV MRK TY I (Y)(4")(SLD)(100 MIL)	★
P	REFL PAV MRK TY I (Y)(24")(SLD)(100 MIL)	★
Q	REFL PAV MRKR TY II-A-A	
R	REFL PAV MRKR TY II-C-R	
S	REFL PAV MRKR TY I-C	
T	REFL PAV MRK TY I (W)(BIKE ARROW)(100MIL)	⊙
U	REFL PAV MRK TY I (Y)(8")(SLD)(100 MIL)	★
V	REFL PAV MRK TY I (W)(DBL ARROW)(100 MIL)	⊙
W	REFL PAV MRK TY I (Y)(MED NOSE)(100 MIL)	⊙

⇨ DIRECTION OF TRAFFIC FLOW

OBJECT MARKER ASSEMBLY (OM-2Z)(FLX)SLF

OBJECT MARKER ASSEMBLY (OM-2X)(WC)GND

DELINEATOR ASSEMBLY (D-SW)(SZ-1)(FLX)GF3

★ TYPE II MARKINGS SHALL BE USED FOR PAVEMENT SEALER. REFER TO SPECIAL SPECIFICATION 6110.

⊙ TYPE II MARKINGS SHALL BE USED FOR PAVEMENT SEALER. REFER TO STANDARD SPECIFICATION 666.

STATE OF TEXAS
JOSE A. SANCHEZ
87890
LICENSED
PROFESSIONAL ENGINEER

2007.12.07

JOSE A. SANCHEZ DATE

NO.	REVISION	BY	DATE

CP&Y Chiang, Patel & Yerby, Inc.

TEDSI INFRASTRUCTURE GROUP
Consulting Engineers
10999 IH 10 West • Suite 320
San Antonio, Texas 78230
(210) 858-0610

BEXAR COUNTY
PUBLIC WORKS DIVISION

F.M. 2696 (BLANCO ROAD)

PAVEMENT MARKINGS LAYOUT

STA 59+50.00 TO STA 70+50.00

SHEET 6 OF 19

Designed: RC	STATE	BEXAR COUNTY FILE NUMBER	PLAN SET NO.
Checked: JAS	TEXAS		732
Drawn: RC	COUNTY		OF
Checked: JAS	BEXAR		842

p:\2007\27958-1-blanco rd south\design\csj\Traffic\Pavement Markings\6102SSRDSL06.DGN
12/7/2007
1:49:17 PM

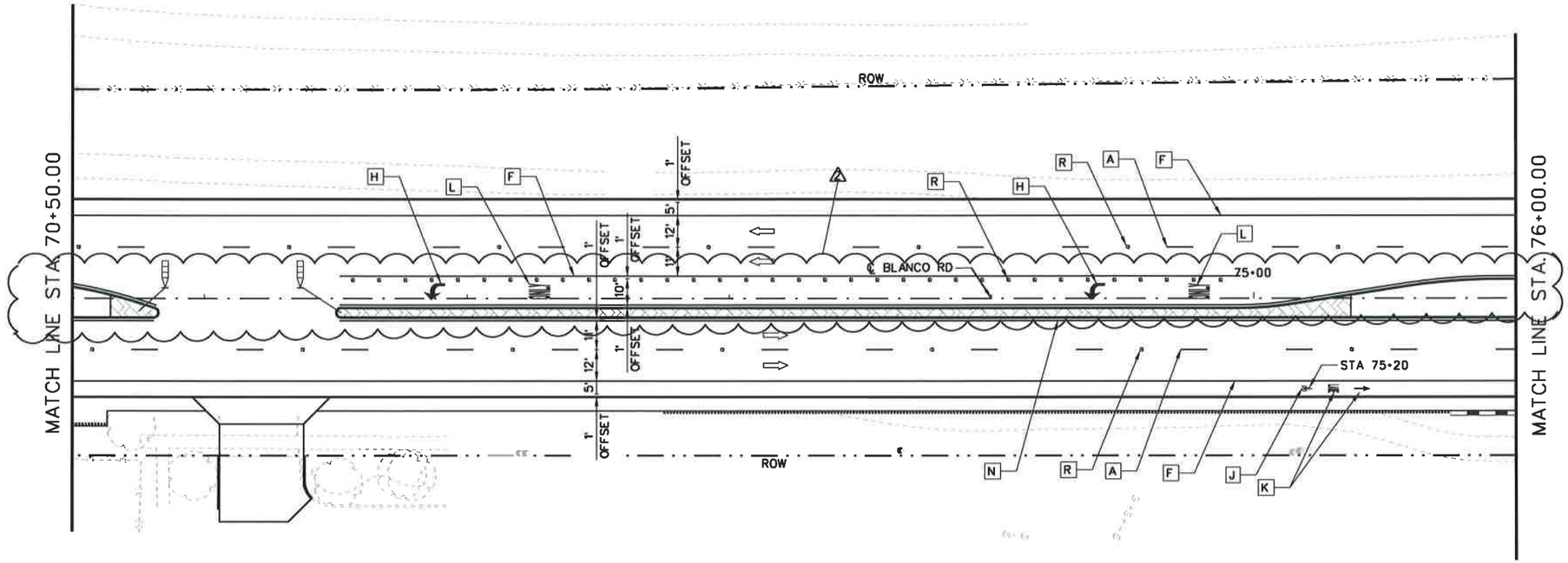

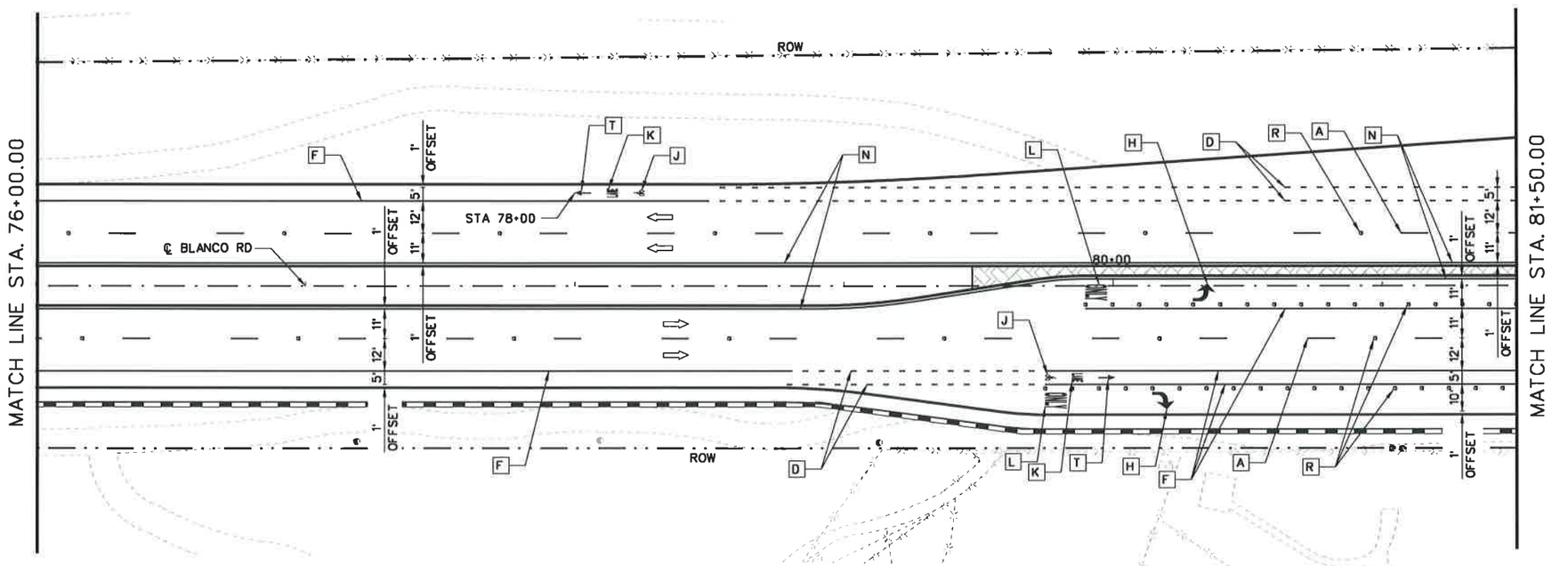

25 12.5 0 25 50
HORIZ. SCALE FEET

LEGEND

A	REFL PAV MRK TY I (W)(4")(BRK)(100 MIL)	★
B	REFL PAV MRK TY I (W)(4")(DOT)(100 MIL)	★
C	REFL PAV MRK TY I (W)(4")(SLD)(100 MIL)	★
D	REFL PAV MRK TY I (W)(8")(DOT)(100 MIL)	★
E	REFL PAV MRK TY I (W)(8")(LNDP)(100 MIL)	★
F	REFL PAV MRK TY I (W)(8")(SLD)(100 MIL)	★
G	REFL PAV MRK TY I (W)(24")(SLD)(100 MIL)	★
H	REFL PAV MRK TY I (W)(ARROW)(100 MIL)	⊙
J	REFL PAV MRK TY I (W)(BIKE SYML)(100MIL)	⊙
K	REFL PAV MRK TY I (W)(BIKE WORD)(100MIL)	⊙
L	REFL PAV MRK TY I (W)(WORD)(100 MIL)	⊙
M	REFL PAV MRK TY I (Y)(4")(BRK)(100 MIL)	★
N	REFL PAV MRK TY I (Y)(4")(SLD)(100 MIL)	★
P	REFL PAV MRK TY I (Y)(24")(SLD)(100 MIL)	★
Q	REFL PAV MRKR TY II-A-A	
R	REFL PAV MRKR TY II-C-R	
S	REFL PAV MRKR TY I-C	
T	REFL PAV MRK TY I (W)(BIKE ARROW)(100MIL)	⊙
U	REFL PAV MRK TY I (Y)(8")(SLD)(100 MIL)	★
V	REFL PAV MRK TY I (W)(DBL ARROW)(100 MIL)	⊙
W	REFL PAV MRK TY I (Y)(MED NOSE)(100 MIL)	⊙

⇨ DIRECTION OF TRAFFIC FLOW

OBJECT MARKER ASSEMBLY (OM-2Z)(FLX)SLF

OBJECT MARKER ASSEMBLY (OM-2X)(WC)GND

DELINEATOR ASSEMBLY (D-SW)(SZ-1)(FLX)GF3

★ TYPE II MARKINGS SHALL BE USED FOR PAVEMENT SEALER. REFER TO SPECIAL SPECIFICATION 6110.

⊙ TYPE II MARKINGS SHALL BE USED FOR PAVEMENT SEALER. REFER TO STANDARD SPECIFICATION 666.

THE SEAL APPEARING BELOW WAS ORIGINALLY AUTHORIZED BY JOSE A. SANCHEZ, PE 87890 ON DEC. 7, 2007. ALTERATION OF A SEALED DOCUMENT WITHOUT PROPER NOTIFICATION TO THE RESPONSIBLE ENGINEER IS AN OFFENSE UNDER THE TEXAS ENGINEERING PRACTICE ACT.

THE SEAL APPEARING BELOW IS FOR MODIFICATIONS DUE TO FIELD ALTERATIONS

STATE OF TEXAS — JOSE A. SANCHEZ — 87890 — LICENSED — PROFESSIONAL ENGINEER

STATE OF TEXAS — REGINALD FOUNTAIN — 97328 — LICENSED — PROFESSIONAL ENGINEER

Reginald Fountain, PE 7/12/10

NO.	REVISION	BY	DATE
2	MODIFICATIONS TO MEDIAN	RTF	07-10

CP&Y Chiang, Patel & Yerby, Inc.

TEDSI INFRASTRUCTURE GROUP
Consulting Engineers
10999 IH 10 West • Suite 320
San Antonio, Texas 78230
(210) 858-0610

BEXAR COUNTY
PUBLIC WORKS DIVISION

F.M. 2696 (BLANCO ROAD)

PAVEMENT MARKINGS LAYOUT

STA 70+50.00 TO STA 81+50.00

SHEET 7 OF 19

Designed: RC	STATE	BEXAR COUNTY FILE NUMBER	PLAN SET NO.
Checked: JAS	TEXAS		733
Drawn: RC	COUNTY		OF
Checked: JAS	BEXAR		842

c:\pwworking\Y:\fountain\dms14570\6102SSR05L07.DGN
12/28/2010 9:23:17 AM

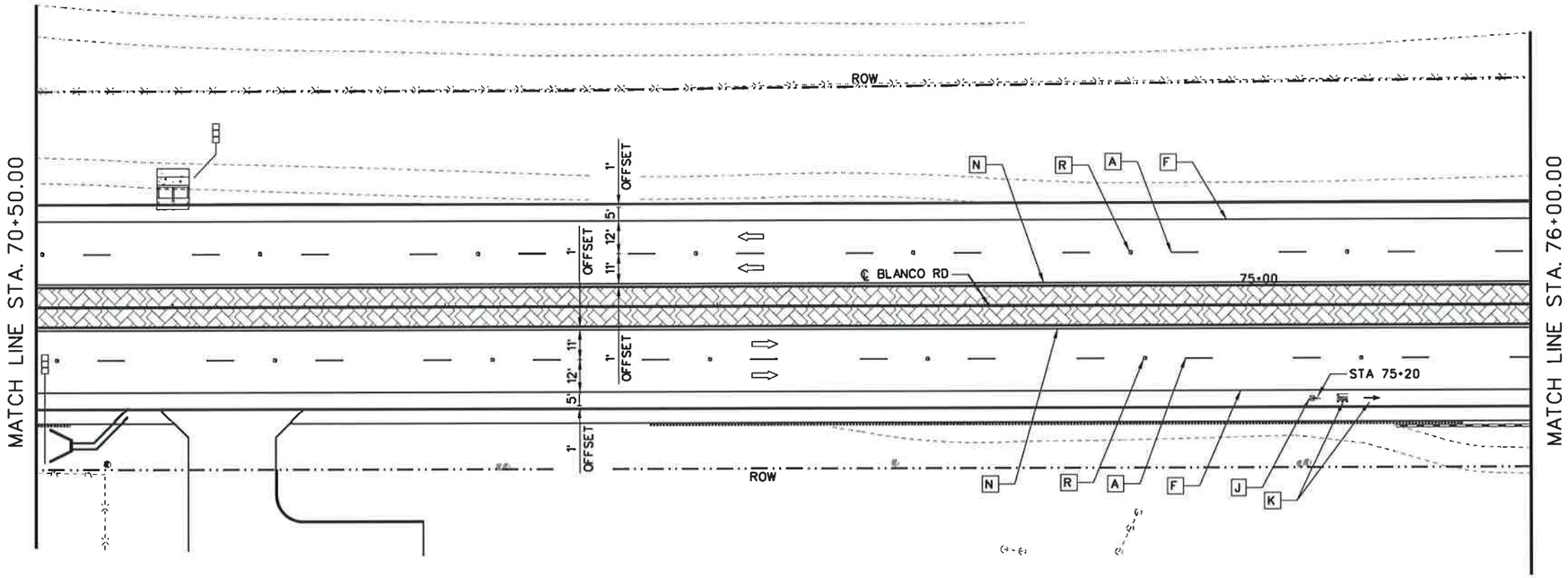

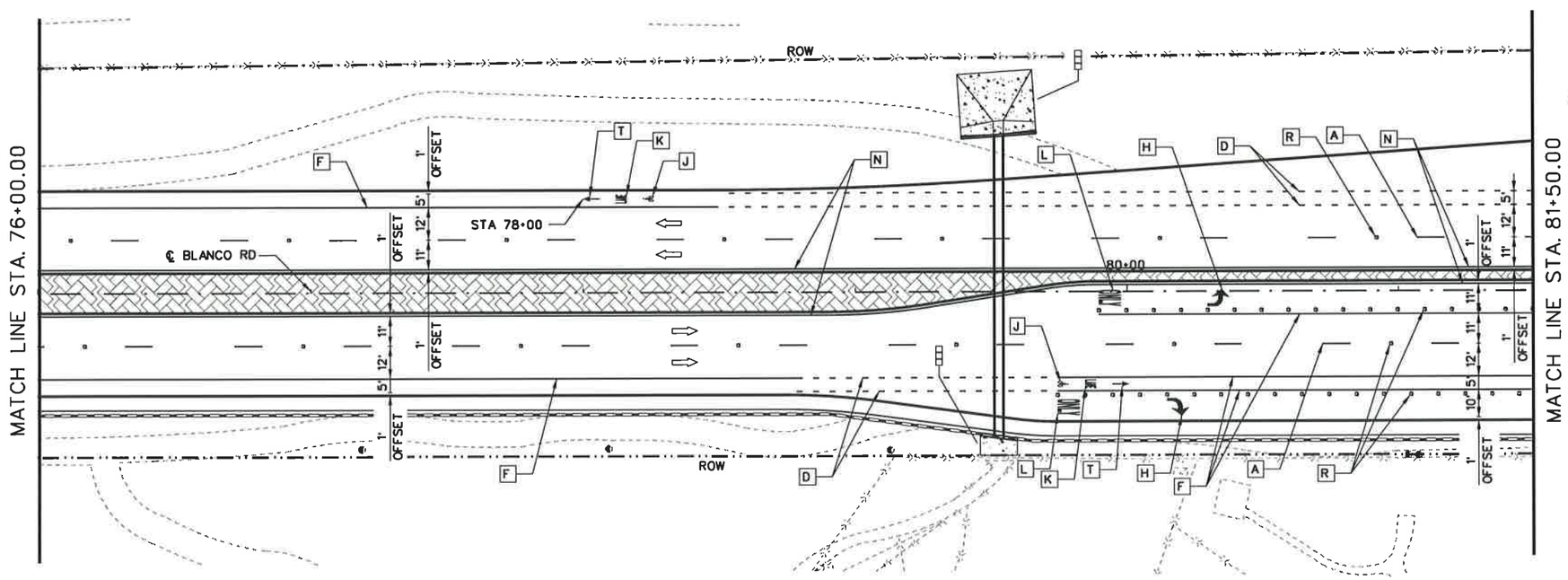

25 12.5 0 25 50
HORIZ. SCALE FEET

LEGEND

A	REFL PAV MRK TY I (W)(4")(BRK)(100 MIL)	★
B	REFL PAV MRK TY I (W)(4")(DOT)(100 MIL)	★
C	REFL PAV MRK TY I (W)(4")(SLD)(100 MIL)	★
D	REFL PAV MRK TY I (W)(8")(DOT)(100 MIL)	★
E	REFL PAV MRK TY I (W)(8")(LNDP)(100 MIL)	★
F	REFL PAV MRK TY I (W)(8")(SLD)(100 MIL)	★
G	REFL PAV MRK TY I (W)(24")(SLD)(100 MIL)	★
H	REFL PAV MRK TY I (W)(ARROW)(100 MIL)	⊙
J	REFL PAV MRK TY I (W)(BIKE SYML)(100MIL)	⊙
K	REFL PAV MRK TY I (W)(BIKE WORD)(100MIL)	⊙
L	REFL PAV MRK TY I (W)(WORD)(100 MIL)	⊙
M	REFL PAV MRK TY I (Y)(4")(BRK)(100 MIL)	★
N	REFL PAV MRK TY I (Y)(4")(SLD)(100 MIL)	★
P	REFL PAV MRK TY I (Y)(24")(SLD)(100 MIL)	★
Q	REFL PAV MRKR TY II-A-A	
R	REFL PAV MRKR TY II-C-R	
S	REFL PAV MRKR TY I-C	
T	REFL PAV MRK TY I (W)(BIKE ARROW)(100MIL)	⊙
U	REFL PAV MRK TY I (Y)(8")(SLD)(100 MIL)	★
V	REFL PAV MRK TY I (W)(DBL ARROW)(100 MIL)	⊙
W	REFL PAV MRK TY I (Y)(MED NOSE)(100 MIL)	⊙

⇨ DIRECTION OF TRAFFIC FLOW

OBJECT MARKER ASSEMBLY (OM-2Z)(FLX)SLF

OBJECT MARKER ASSEMBLY (OM-2X)(WC)GND

DELINEATOR ASSEMBLY (D-SW)(SZ-1)(FLX)GF3

★ TYPE II MARKINGS SHALL BE USED FOR PAVEMENT SEALER. REFER TO SPECIAL SPECIFICATION 6110.

⊙ TYPE II MARKINGS SHALL BE USED FOR PAVEMENT SEALER. REFER TO STANDARD SPECIFICATION 666.

STATE OF TEXAS
JOSE A. SANCHEZ
87890
LICENSED
PROFESSIONAL ENGINEER

2007.12.07

JOSE A. SANCHEZ DATE

NO.	REVISION	BY	DATE

CP&Y Chiang, Patel & Yerby, Inc.

TEDSI INFRASTRUCTURE GROUP
Consulting Engineers
10999 IH 10 West • Suite 330
San Antonio, Texas 78230
(210) 858-0610

BEXAR COUNTY
PUBLIC WORKS DIVISION

F.M. 2696 (BLANCO ROAD)

PAVEMENT MARKINGS LAYOUT

STA 70+50.00 TO STA 81+50.00

SHEET 7 OF 19

Designed: RC	STATE	BEXAR COUNTY FILE NUMBER	PLAN SET NO.
Checked: JAS	TEXAS		733
Drawn: RC	COUNTY		OF
Checked: JAS	BEXAR		842

p:\2007\279956-1-blanco rd south\design\csj\Traffic\Pavement Markings\6102SRDSL07.DGN
12/7/2007 1:49:21 PM

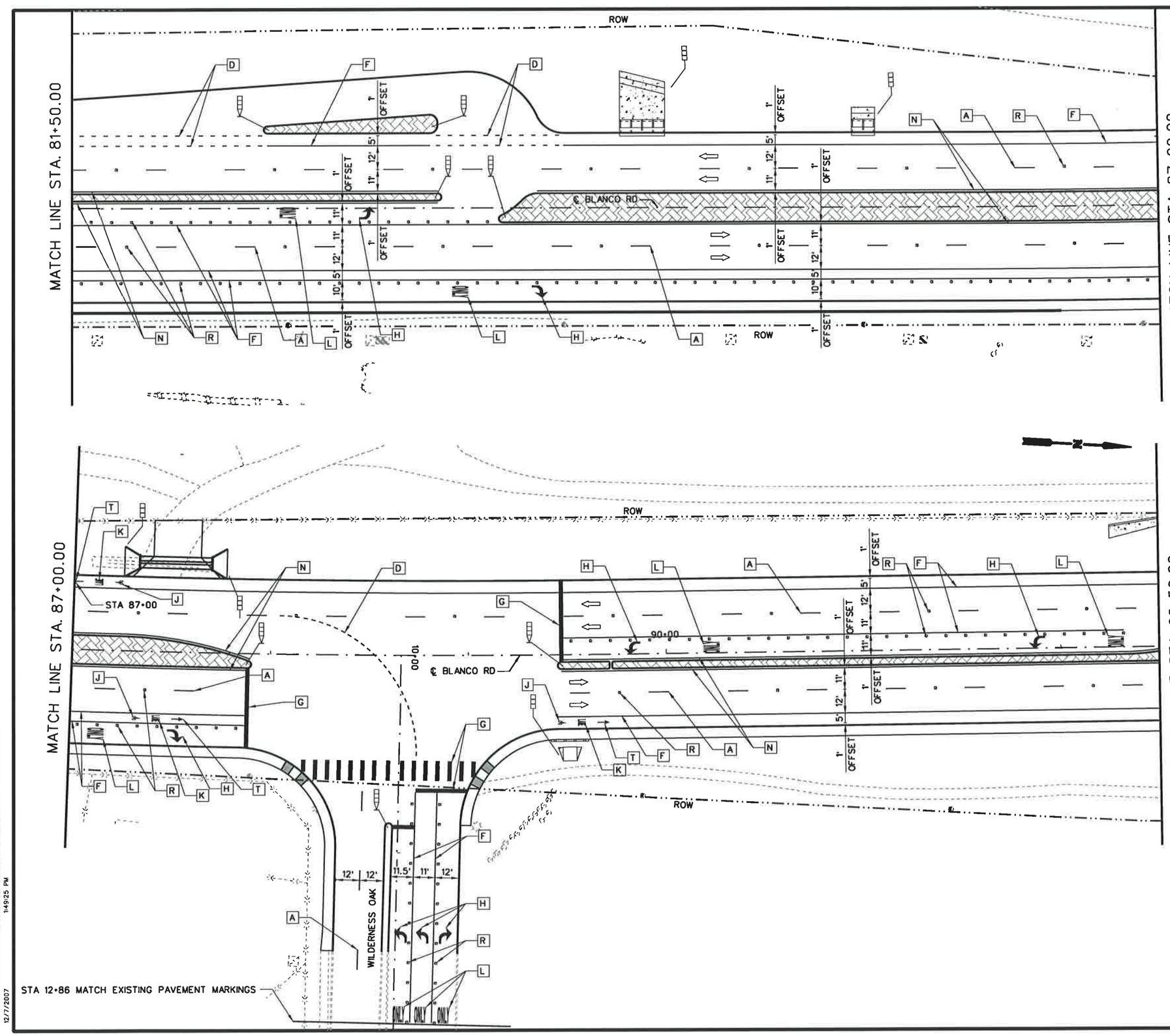

25 12.5 0 25 50
HORIZ. SCALE FEET

LEGEND

A	REFL PAV MRK TY I (W)(4")(BRK)(100 MIL)	★
B	REFL PAV MRK TY I (W)(4")(DOT)(100 MIL)	★
C	REFL PAV MRK TY I (W)(4")(SLD)(100 MIL)	★
D	REFL PAV MRK TY I (W)(8")(DOT)(100 MIL)	★
E	REFL PAV MRK TY I (W)(8")(LNDP)(100 MIL)	★
F	REFL PAV MRK TY I (W)(8")(SLD)(100 MIL)	★
G	REFL PAV MRK TY I (W)(24")(SLD)(100 MIL)	★
H	REFL PAV MRK TY I (W)(ARROW)(100 MIL)	⊙
J	REFL PAV MRK TY I (W)(BIKE SYML)(100MIL)	⊙
K	REFL PAV MRK TY I (W)(BIKE WORD)(100MIL)	⊙
L	REFL PAV MRK TY I (W)(WORD)(100 MIL)	⊙
M	REFL PAV MRK TY I (Y)(4")(BRK)(100 MIL)	★
N	REFL PAV MRK TY I (Y)(4")(SLD)(100 MIL)	★
P	REFL PAV MRK TY I (Y)(24")(SLD)(100 MIL)	★
Q	REFL PAV MRKR TY II-A-A	
R	REFL PAV MRKR TY II-C-R	
S	REFL PAV MRKR TY I-C	
T	REFL PAV MRK TY I (W)(BIKE ARROW)(100MIL)	⊙
U	REFL PAV MRK TY I (Y)(8")(SLD)(100 MIL)	★
V	REFL PAV MRK TY I (W)(DBL ARROW)(100 MIL)	⊙
W	REFL PAV MRK TY I (Y)(MED NOSE)(100 MIL)	⊙

⇨ DIRECTION OF TRAFFIC FLOW

OBJECT MARKER ASSEMBLY (OM-2Z)(FLX)SLF

OBJECT MARKER ASSEMBLY (OM-2X)(WC)GND

DELINEATOR ASSEMBLY (D-SW)(SZ-1)(FLX)GF3

★ TYPE II MARKINGS SHALL BE USED FOR PAVEMENT SEALER. REFER TO SPECIAL SPECIFICATION 6110.

⊙ TYPE II MARKINGS SHALL BE USED FOR PAVEMENT SEALER. REFER TO STANDARD SPECIFICATION 666.

STATE OF TEXAS
JOSE A. SANCHEZ
87890
LICENSED
PROFESSIONAL ENGINEER

2007.12.07

JOSE A. SANCHEZ DATE

NO.	REVISION	BY	DATE

CP&Y Chiang, Patel & Yerby, Inc.

TEDSI INFRASTRUCTURE GROUP
Consulting Engineers
10999 IH 10 West • Suite 320
San Antonio, Texas 78230
(210) 858-6610

BEXAR COUNTY
PUBLIC WORKS DIVISION

F.M. 2696 (BLANCO ROAD)

PAVEMENT MARKINGS LAYOUT

STA 81+50.00 TO STA 92+50.00

SHEET 8 OF 19

Designed: RC	STATE	BEXAR COUNTY FILE NUMBER	PLAN SET NO. 73
Checked: JAS	TEXAS		OF
Drawn: RC	COUNTY		842
Checked: JAS	BEXAR		

p:\2007\2795B-i-blanco rd south\design\sj\Traffic\Pavement Markings\6102SSRDSL08.DGN
12/7/2007 1:49:25 PM

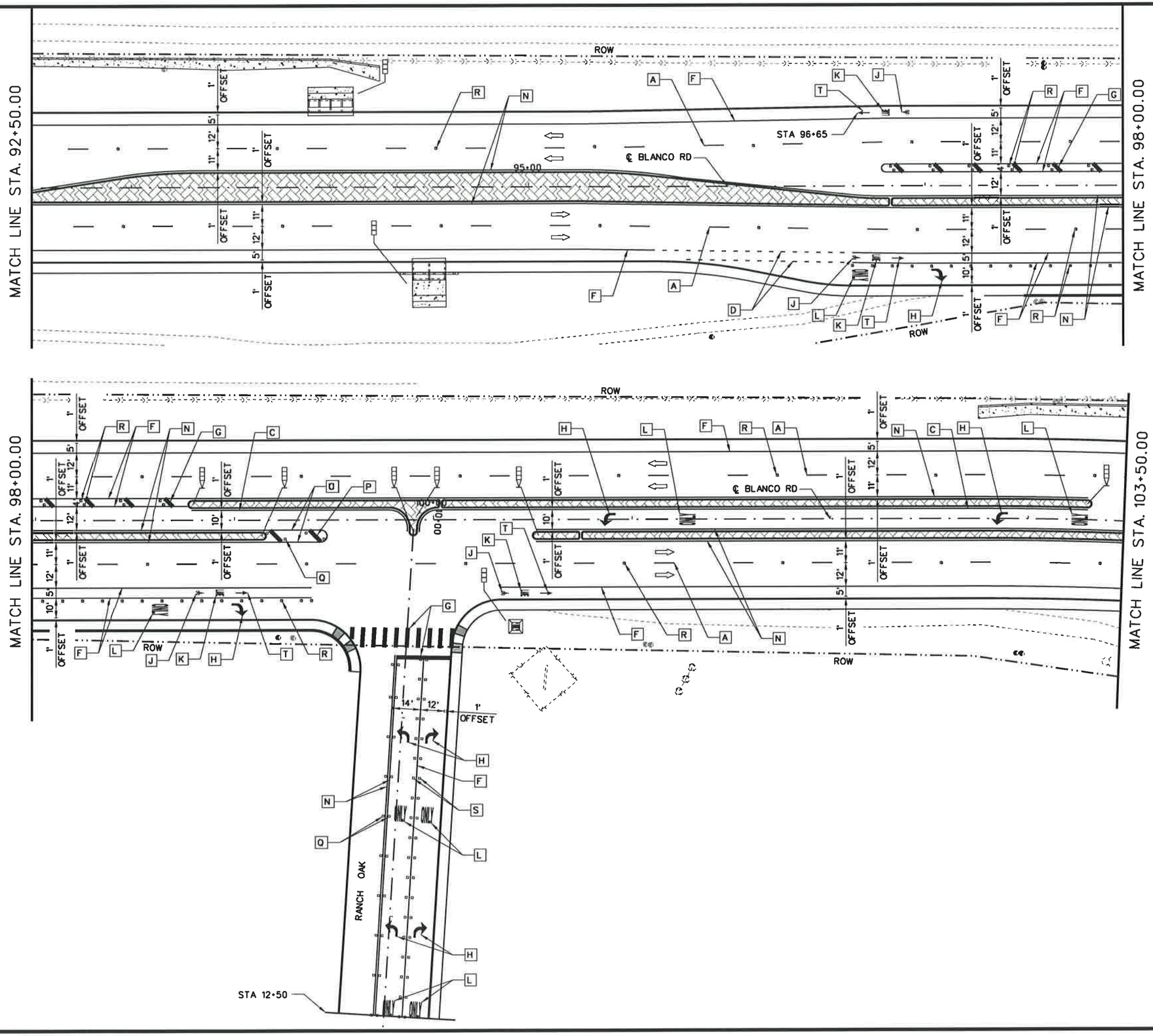

25 12.5 0 25 50
HORIZ. SCALE FEET

LEGEND

A	REFL PAV MRK TY I (W)(4")(BRK)(100 MIL)	★
B	REFL PAV MRK TY I (W)(4")(DOT)(100 MIL)	★
C	REFL PAV MRK TY I (W)(4")(SLD)(100 MIL)	★
D	REFL PAV MRK TY I (W)(8")(DOT)(100 MIL)	★
E	REFL PAV MRK TY I (W)(8")(LNDP)(100 MIL)	★
F	REFL PAV MRK TY I (W)(8")(SLD)(100 MIL)	★
G	REFL PAV MRK TY I (W)(24")(SLD)(100 MIL)	★
H	REFL PAV MRK TY I (W)(ARROW)(100 MIL)	⊙
J	REFL PAV MRK TY I (W)(BIKE SYML)(100MIL)	⊙
K	REFL PAV MRK TY I (W)(BIKE WORD)(100MIL)	⊙
L	REFL PAV MRK TY I (W)(WORD)(100 MIL)	⊙
M	REFL PAV MRK TY I (Y)(4")(BRK)(100 MIL)	★
N	REFL PAV MRK TY I (Y)(4")(SLD)(100 MIL)	★
P	REFL PAV MRK TY I (Y)(24")(SLD)(100 MIL)	★
Q	REFL PAV MRKR TY II-A-A	
R	REFL PAV MRKR TY II-C-R	
S	REFL PAV MRKR TY I-C	
T	REFL PAV MRK TY I (W)(BIKE ARROW)(100MIL)	⊙
U	REFL PAV MRK TY I (Y)(8")(SLD)(100 MIL)	★
V	REFL PAV MRK TY I (W)(DBL ARROW)(100 MIL)	⊙
W	REFL PAV MRK TY I (Y)(MED NOSE)(100 MIL)	⊙

⇨ DIRECTION OF TRAFFIC FLOW

OBJECT MARKER ASSEMBLY (OM-2Z)(FLX)SLF

OBJECT MARKER ASSEMBLY (OM-2X)(WC)GND

DELINEATOR ASSEMBLY (D-SW)(SZ-1)(FLX)GF3

★ TYPE II MARKINGS SHALL BE USED FOR PAVEMENT SEALER. REFER TO SPECIAL SPECIFICATION 6110.

⊙ TYPE II MARKINGS SHALL BE USED FOR PAVEMENT SEALER. REFER TO STANDARD SPECIFICATION 666.

STATE OF TEXAS
JOSE A. SANCHEZ
87890
LICENSED
PROFESSIONAL ENGINEER

2007.12.07

JOSE A. SANCHEZ DATE

NO.	REVISION	BY	DATE

CP&Y Chiang, Patel & Yerby, Inc.

TEDSI INFRASTRUCTURE GROUP
Consulting Engineers
10999 IH 10 West • Suite 320
San Antonio, Texas 78230
(210) 858-0610

BEXAR COUNTY
PUBLIC WORKS DIVISION

F.M. 2696 (BLANCO ROAD)

PAVEMENT MARKINGS LAYOUT

STA 92+50.00 TO STA 103+50.00

SHEET 9 OF 19

Designed: RC	STATE	BEXAR COUNTY FILE NUMBER	PLAN SET NO.
Checked: JAS	TEXAS		735
Drawn: RC	COUNTY		OF
Checked: JAS	BEXAR		842

p:\2007\27958-1-blanco rd south\design\csj\Traffic\Pavement Markings\6102SSRDSL09.DGN
12/7/2007 1:49:28 PM

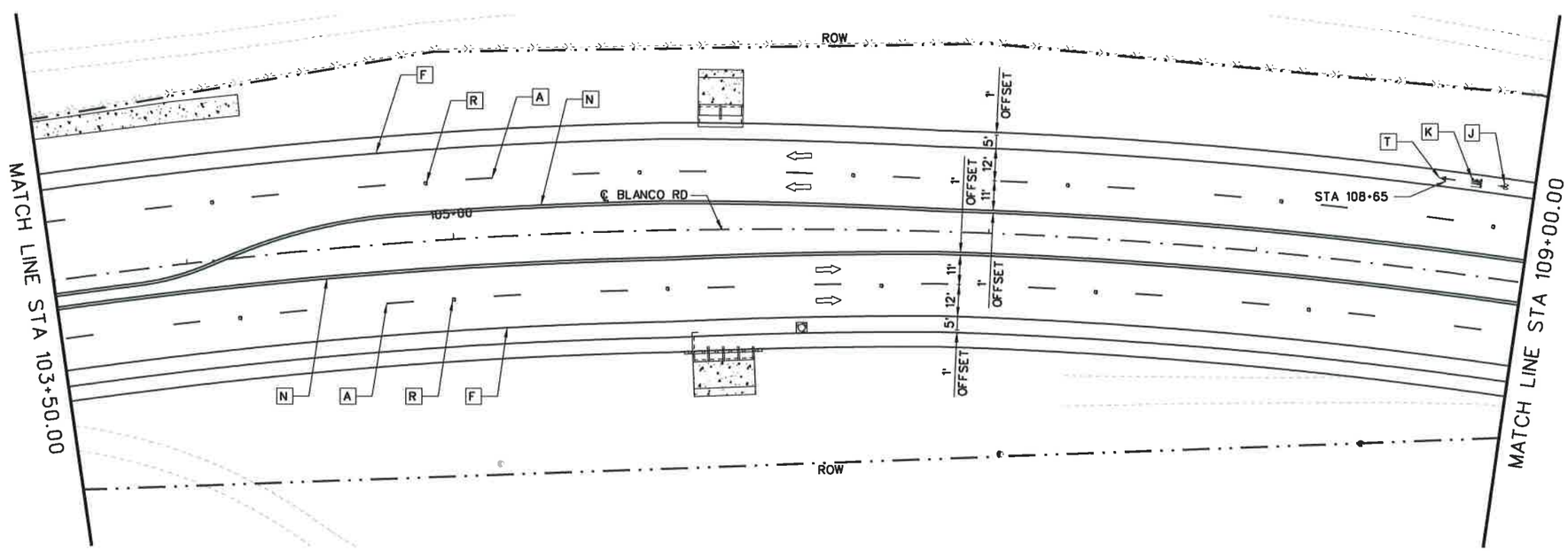

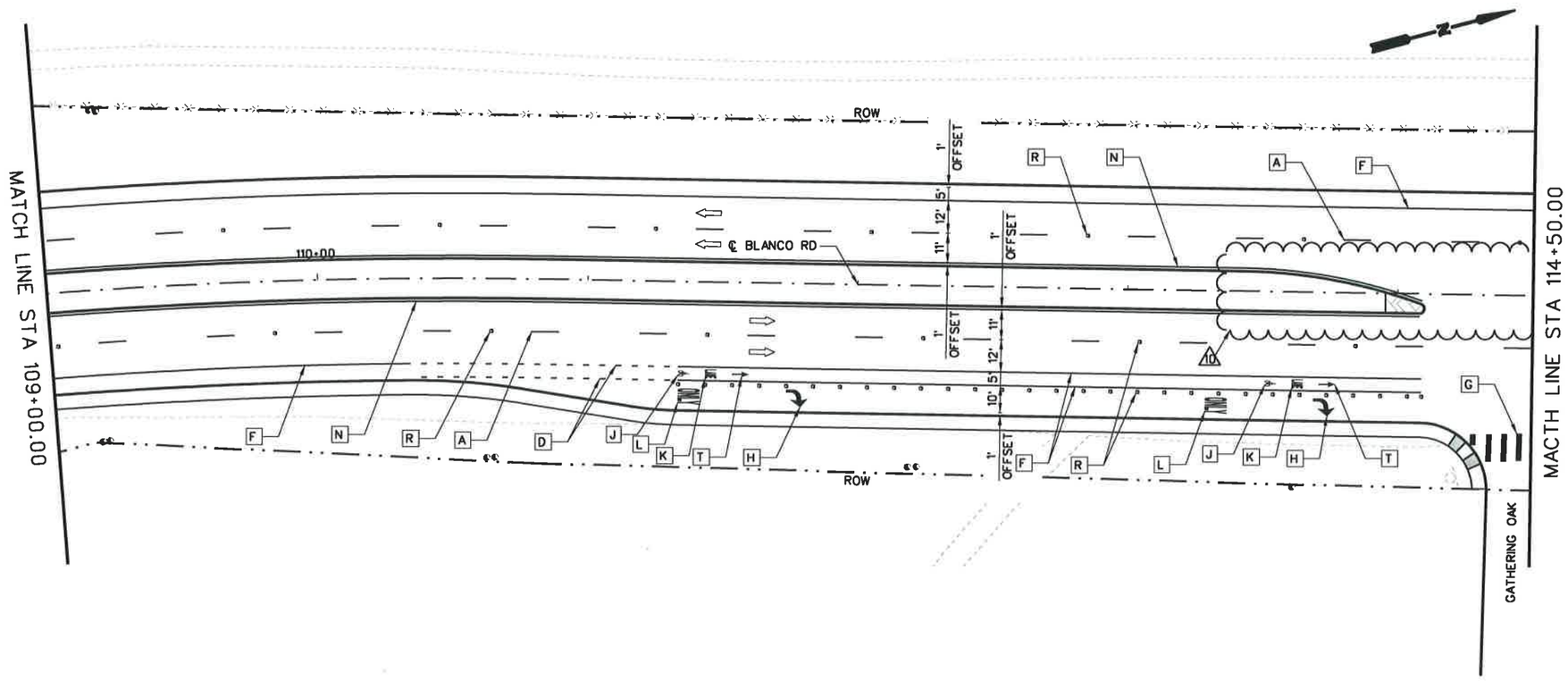

25 12.5 0 25 50
HORIZ. SCALE FEET

LEGEND

A	REFL PAV MRK TY I (W)(4")(BRK)(100 MIL)	★
B	REFL PAV MRK TY I (W)(4")(DOT)(100 MIL)	★
C	REFL PAV MRK TY I (W)(4")(SLD)(100 MIL)	★
D	REFL PAV MRK TY I (W)(8")(DOT)(100 MIL)	★
E	REFL PAV MRK TY I (W)(8")(LNDP)(100 MIL)	★
F	REFL PAV MRK TY I (W)(8")(SLD)(100 MIL)	★
G	REFL PAV MRK TY I (W)(24")(SLD)(100 MIL)	★
H	REFL PAV MRK TY I (W)(ARROW)(100 MIL)	⊙
J	REFL PAV MRK TY I (W)(BIKE SYML)(100MIL)	⊙
K	REFL PAV MRK TY I (W)(BIKE WORD)(100MIL)	⊙
L	REFL PAV MRK TY I (W)(WORD)(100 MIL)	⊙
M	REFL PAV MRK TY I (Y)(4")(BRK)(100 MIL)	★
N	REFL PAV MRK TY I (Y)(4")(SLD)(100 MIL)	★
P	REFL PAV MRK TY I (Y)(24")(SLD)(100 MIL)	★
Q	REFL PAV MRKR TY II-A-A	
R	REFL PAV MRKR TY II-C-R	
S	REFL PAV MRKR TY I-C	
T	REFL PAV MRK TY I (W)(BIKE ARROW)(100MIL)	⊙
U	REFL PAV MRK TY I (Y)(8")(SLD)(100 MIL)	★
V	REFL PAV MRK TY I (W)(DBL ARROW)(100 MIL)	⊙
W	REFL PAV MRK TY I (Y)(MED NOSE)(100 MIL)	⊙

⇨ DIRECTION OF TRAFFIC FLOW

OBJECT MARKER ASSEMBLY (OM-2Z)(FLX)SLF

OBJECT MARKER ASSEMBLY (OM-2X)(WC)GND

DELINEATOR ASSEMBLY (D-SW)(SZ-1)(FLX)GF3

★ TYPE II MARKINGS SHALL BE USED FOR PAVEMENT SEALER. REFER TO SPECIAL SPECIFICATION 6110.

⊙ TYPE II MARKINGS SHALL BE USED FOR PAVEMENT SEALER. REFER TO STANDARD SPECIFICATION 666.

THE SEAL APPEARING BELOW WAS ORIGINALLY AUTHORIZED BY JOSE A. SANCHEZ, PE 87890 ON DEC. 7, 2007. ALTERATION OF A SEALED DOCUMENT WITHOUT PROPER NOTIFICATION TO THE RESPONSIBLE ENGINEER IS AN OFFENSE UNDER THE TEXAS ENGINEERING PRACTICE ACT.

STATE OF TEXAS — JOSE A. SANCHEZ — 87890 — LICENSED — PROFESSIONAL ENGINEER

THE SEAL APPEARING BELOW IS FOR MODIFICATIONS DUE TO FIELD ALTERATIONS

Reginald Fountain, PE 11/30/09

STATE OF TEXAS — REGINALD FOUNTAIN — 97328 — LICENSED — PROFESSIONAL ENGINEER

NO.	REVISION	BY	DATE
1	FA#10 REVISIONS TO MEDIAN DESIGN		

CP&Y Chiang, Patel & Yerby, Inc.

TEDSI INFRASTRUCTURE GROUP
Consulting Engineers
10999 IH 10 West • Suite 320
San Antonio, Texas 78230
(210) 858-6610

BEXAR COUNTY
PUBLIC WORKS DIVISION

F.M. 2696 (BLANCO ROAD)

PAVEMENT MARKINGS LAYOUT

STA 103+50.00 TO STA 114+50.00

SHEET 10 OF 19

Designed:	CA	STATE	BEXAR COUNTY FILE NUMBER	PLAN SET NO.
Checked:	JAS	TEXAS		736
Drawn:	SS	COUNTY		OF
Checked:	JAS	BEXAR		842

c:\pwworking\rfountain\dms14570\6102SSROSL10.DGN
12/28/2010 10:38:56 AM

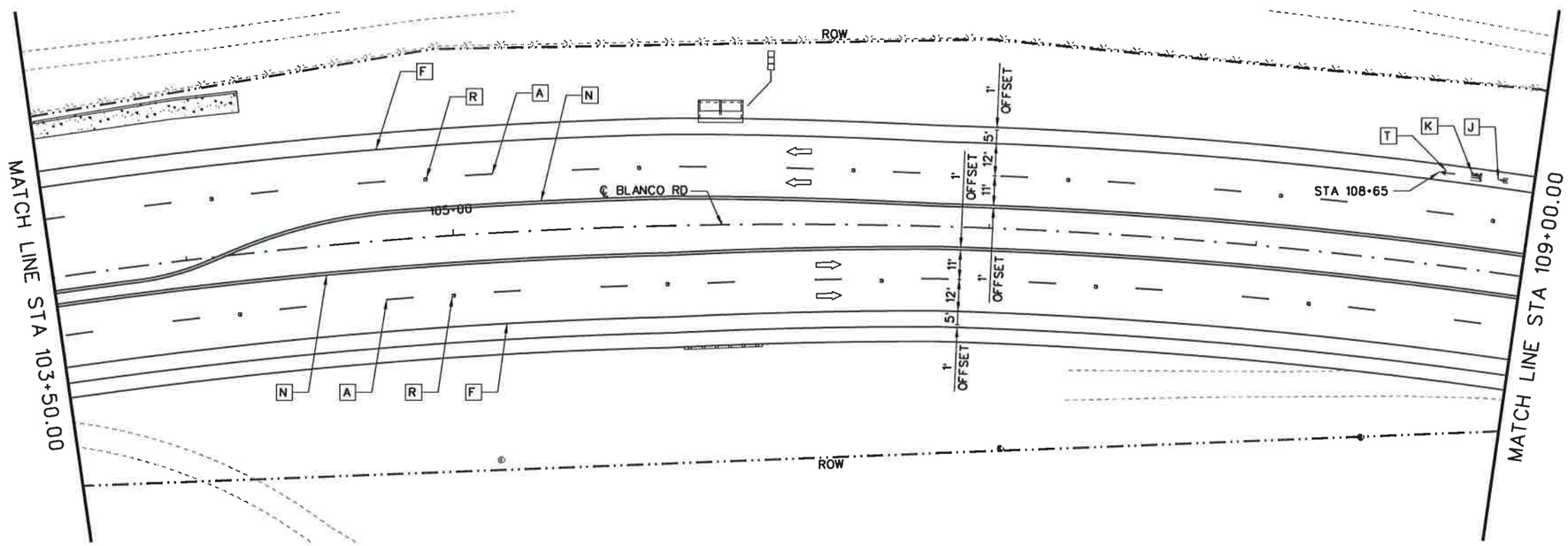

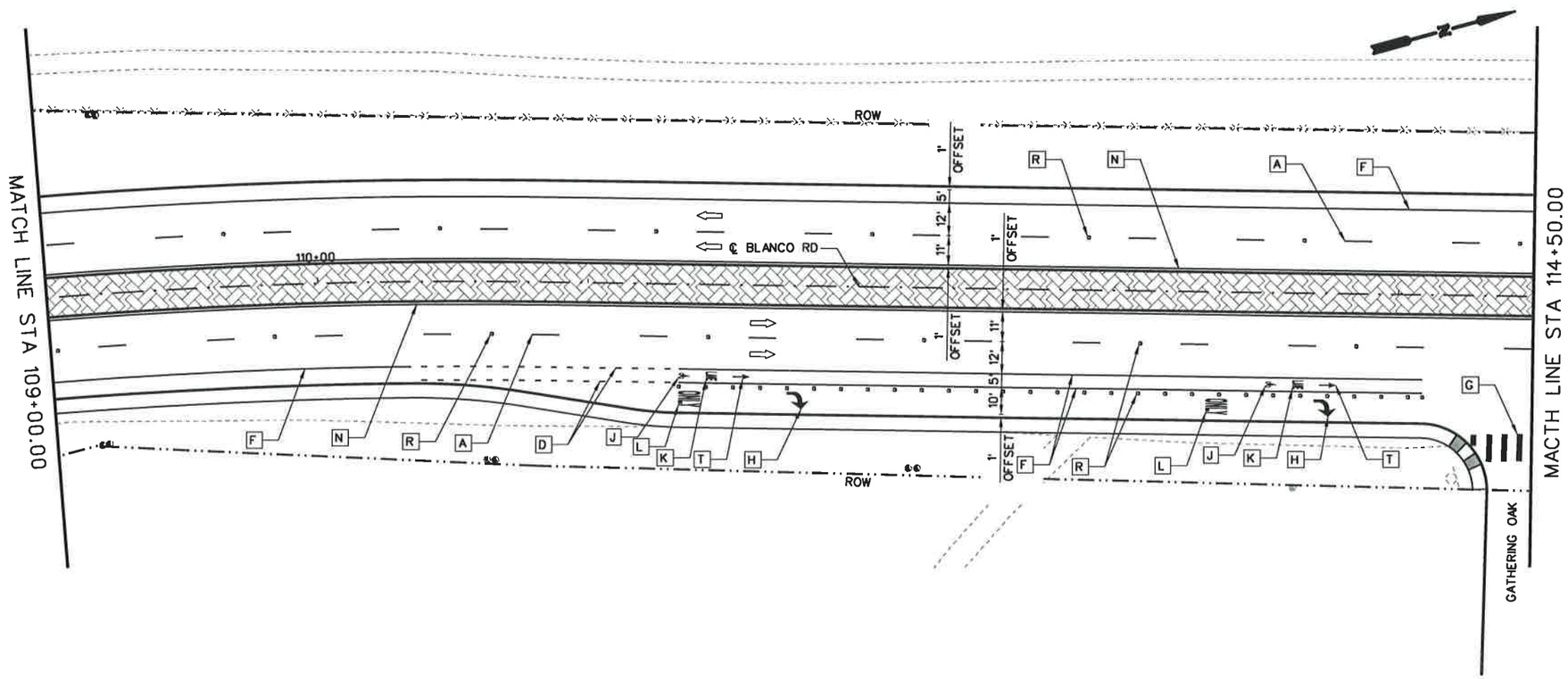

25 12.5 0 25 50
HORIZ. SCALE FEET

LEGEND

A	REFL PAV MRK TY I (W)(4")(BRK)(100 MIL)	★
B	REFL PAV MRK TY I (W)(4")(DOT)(100 MIL)	★
C	REFL PAV MRK TY I (W)(4")(SLD)(100 MIL)	★
D	REFL PAV MRK TY I (W)(8")(DOT)(100 MIL)	★
E	REFL PAV MRK TY I (W)(8")(LNDP)(100 MIL)	★
F	REFL PAV MRK TY I (W)(8")(SLD)(100 MIL)	★
G	REFL PAV MRK TY I (W)(24")(SLD)(100 MIL)	★
H	REFL PAV MRK TY I (W)(ARROW)(100 MIL)	⊙
J	REFL PAV MRK TY I (W)(BIKE SYML)(100MIL)	⊙
K	REFL PAV MRK TY I (W)(BIKE WORD)(100MIL)	⊙
L	REFL PAV MRK TY I (W)(WORD)(100 MIL)	⊙
M	REFL PAV MRK TY I (Y)(4")(BRK)(100 MIL)	★
N	REFL PAV MRK TY I (Y)(4")(SLD)(100 MIL)	★
P	REFL PAV MRK TY I (Y)(24")(SLD)(100 MIL)	★
Q	REFL PAV MRKR TY II-A-A	
R	REFL PAV MRKR TY II-C-R	
S	REFL PAV MRKR TY I-C	
T	REFL PAV MRK TY I (W)(BIKE ARROW)(100MIL)	⊙
U	REFL PAV MRK TY I (Y)(8")(SLD)(100 MIL)	★
V	REFL PAV MRK TY I (W)(DBL ARROW)(100 MIL)	⊙
W	REFL PAV MRK TY I (Y)(MED NOSE)(100 MIL)	⊙

⇨ DIRECTION OF TRAFFIC FLOW

OBJECT MARKER ASSEMBLY (OM-2Z)(FLX)SLF

OBJECT MARKER ASSEMBLY (OM-2X)(WC)GND

DELINEATOR ASSEMBLY (D-SW)(SZ-1)(FLX)GF3

★ TYPE II MARKINGS SHALL BE USED FOR PAVEMENT SEALER. REFER TO SPECIAL SPECIFICATION 6110.

⊙ TYPE II MARKINGS SHALL BE USED FOR PAVEMENT SEALER. REFER TO STANDARD SPECIFICATION 666.

STATE OF TEXAS
JOSE A. SANCHEZ
87890
LICENSED
PROFESSIONAL ENGINEER

2007.12.07

JOSE A. SANCHEZ DATE

NO.	REVISION	BY	DATE

CP&Y Chiang, Patel & Yerby, Inc.

TEDSI INFRASTRUCTURE GROUP
Consulting Engineers
10999 IH 10 West • Suite 320
San Antonio, Texas 78230
(210) 858-0610

BEXAR COUNTY
PUBLIC WORKS DIVISION

F.M. 2696 (BLANCO ROAD)

PAVEMENT MARKINGS LAYOUT

STA 103+50.00 TO STA 114+50.00

SHEET 10 OF 19

Designed: RC	STATE	BEXAR COUNTY FILE NUMBER	PLAN SET NO. 73
Checked: JAS	TEXAS		
Drawn: RC	COUNTY		OF
Checked: JAS	BEXAR		842

p:\2007\27958-1-blanco rd south\design\cs\Traffic\Pavement Markings\6102SSRDSL10.DGN
12/7/2007 1:49:32 PM

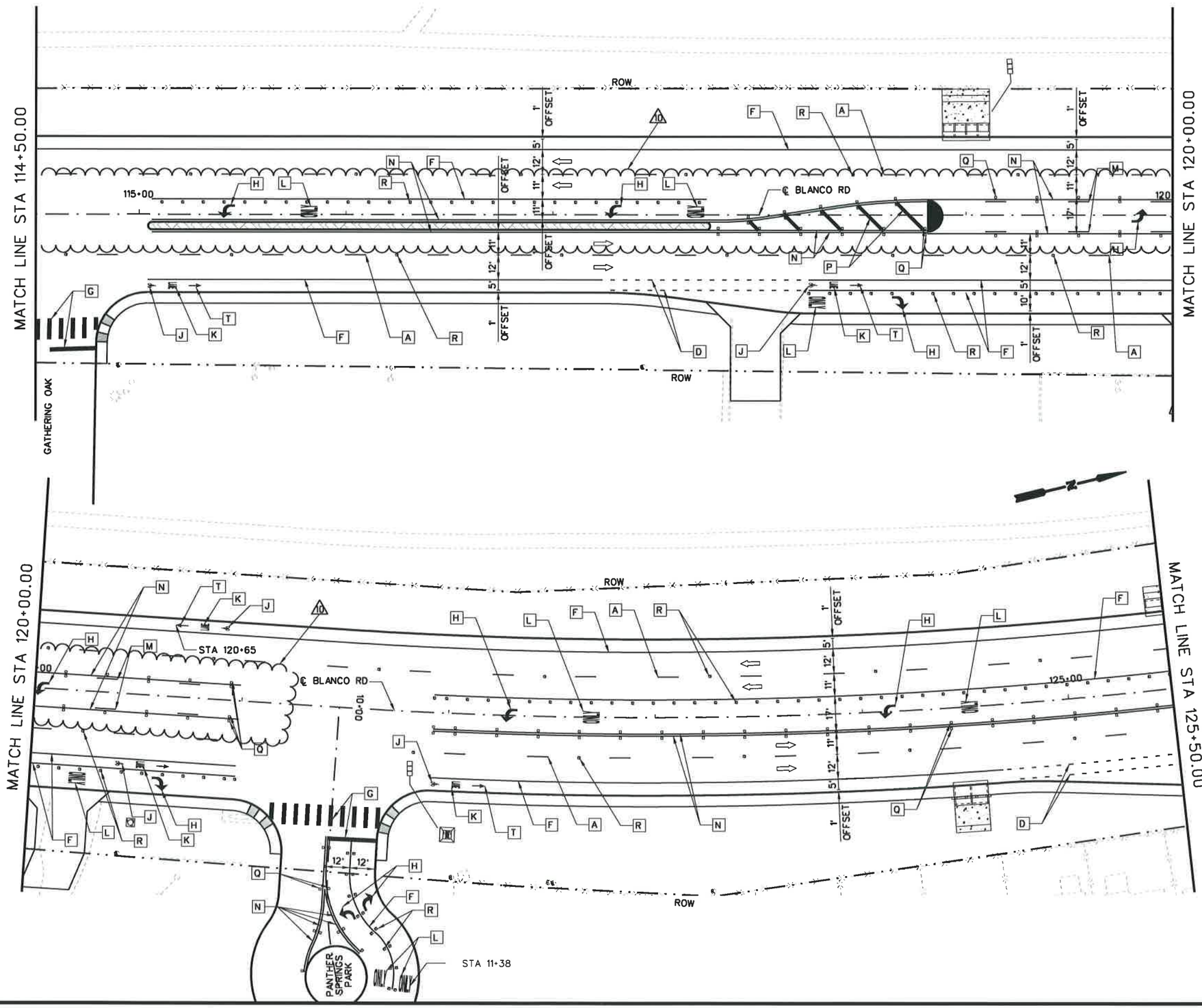

25 12.5 0 25 50
HORIZ. SCALE FEET

LEGEND

A	REFL PAV MRK TY I (W)(4")(BRK)(100 MIL)	★
B	REFL PAV MRK TY I (W)(4")(DOT)(100 MIL)	★
C	REFL PAV MRK TY I (W)(4")(SLD)(100 MIL)	★
D	REFL PAV MRK TY I (W)(8")(DOT)(100 MIL)	★
E	REFL PAV MRK TY I (W)(8")(LNDP)(100 MIL)	★
F	REFL PAV MRK TY I (W)(8")(SLD)(100 MIL)	★
G	REFL PAV MRK TY I (W)(24")(SLD)(100 MIL)	★
H	REFL PAV MRK TY I (W)(ARROW)(100 MIL)	⊙
J	REFL PAV MRK TY I (W)(BIKE SYML)(100MIL)	⊙
K	REFL PAV MRK TY I (W)(BIKE WORD)(100MIL)	⊙
L	REFL PAV MRK TY I (W)(WORD)(100 MIL)	⊙
M	REFL PAV MRK TY I (Y)(4")(BRK)(100 MIL)	★
N	REFL PAV MRK TY I (Y)(4")(SLD)(100 MIL)	★
P	REFL PAV MRK TY I (Y)(24")(SLD)(100 MIL)	★
Q	REFL PAV MRKR TY II-A-A	
R	REFL PAV MRKR TY II-C-R	
S	REFL PAV MRKR TY I-C	
T	REFL PAV MRK TY I (W)(BIKE ARROW)(100MIL)	⊙
U	REFL PAV MRK TY I (Y)(8")(SLD)(100 MIL)	★
V	REFL PAV MRK TY I (W)(DBL ARROW)(100 MIL)	⊙
W	REFL PAV MRK TY I (Y)(MED NOSE)(100 MIL)	⊙

⇨ DIRECTION OF TRAFFIC FLOW

OBJECT MARKER ASSEMBLY (OM-2Z)(FLX)SLF

OBJECT MARKER ASSEMBLY (OM-2X)(WC)GND

DELINEATOR ASSEMBLY (D-SW)(SZ-1)(FLX)GF3

★ TYPE II MARKINGS SHALL BE USED FOR PAVEMENT SEALER. REFER TO SPECIAL SPECIFICATION 6110.

⊙ TYPE II MARKINGS SHALL BE USED FOR PAVEMENT SEALER. REFER TO STANDARD SPECIFICATION 666.

THE SEAL APPEARING BELOW WAS ORIGINALLY AUTHORIZED BY JOSE A. SANCHEZ PE 87890 ON DEC. 7, 2007. ALTERATION OF A SEALED DOCUMENT WITHOUT PROPER NOTIFICATION TO THE RESPONSIBLE ENGINEER IS AN OFFENSE UNDER THE TEXAS ENGINEERING PRACTICE ACT.

STATE OF TEXAS — JOSE A. SANCHEZ — 87890 — LICENSED — PROFESSIONAL ENGINEER

THE SEAL APPEARING BELOW IS FOR MODIFICATIONS DUE TO FIELD ALTERATIONS

Reginald Fountain 11/30/09

STATE OF TEXAS — REGINALD FOUNTAIN — 97328 — LICENSED — PROFESSIONAL ENGINEER

NO.	REVISION	BY	DATE
1	FA#10 REVISIONS TO MEDIAN DESIGN		

CP&Y Chiang, Patel & Yerby, Inc.

TEDSI INFRASTRUCTURE GROUP
Consulting Engineers
10999 IH 10 West ♦ Suite 320
San Antonio, Texas 78230
(210) 858-0610

BEXAR COUNTY
PUBLIC WORKS DIVISION

F.M. 2696 (BLANCO ROAD)

PAVEMENT MARKINGS LAYOUT

STA 114+50.00 TO STA 125+50.00

SHEET 11 OF 19

Designed: CA	STATE	BEXAR COUNTY FILE NUMBER	PLAN SET NO.	
Checked: JAS	TEXAS		737	
Drawn: SS	COUNTY		OF	
Checked: JAS	BEXAR		842	

c:\pwworking\rfountain\dms14570\61025SR05L11.DGN
12/28/2010 10:39:29 AM

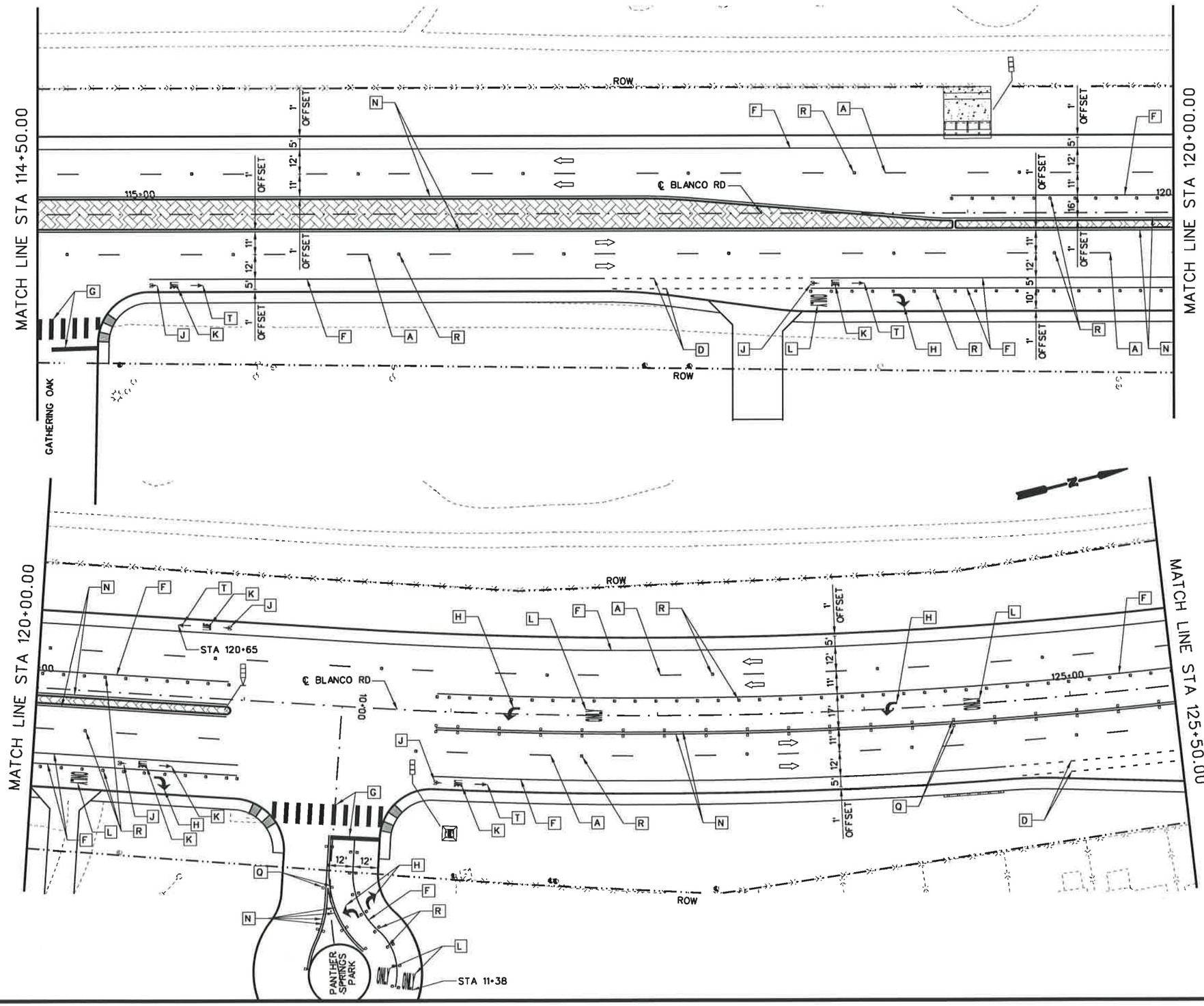

25 12.5 0 25 50
HORIZ. SCALE FEET

LEGEND

A	REFL PAV MRK TY I (W)(4")(BRK)(100 MIL)	★
B	REFL PAV MRK TY I (W)(4")(DOT)(100 MIL)	★
C	REFL PAV MRK TY I (W)(4")(SLD)(100 MIL)	★
D	REFL PAV MRK TY I (W)(8")(DOT)(100 MIL)	★
E	REFL PAV MRK TY I (W)(8")(LNDP)(100 MIL)	★
F	REFL PAV MRK TY I (W)(8")(SLD)(100 MIL)	★
G	REFL PAV MRK TY I (W)(24")(SLD)(100 MIL)	★
H	REFL PAV MRK TY I (W)(ARROW)(100 MIL)	⊙
J	REFL PAV MRK TY I (W)(BIKE SYML)(100MIL)	⊙
K	REFL PAV MRK TY I (W)(BIKE WORD)(100MIL)	⊙
L	REFL PAV MRK TY I (W)(WORD)(100 MIL)	⊙
M	REFL PAV MRK TY I (Y)(4")(BRK)(100 MIL)	★
N	REFL PAV MRK TY I (Y)(4")(SLD)(100 MIL)	★
P	REFL PAV MRK TY I (Y)(24")(SLD)(100 MIL)	★
Q	REFL PAV MRKR TY II-A-A	
R	REFL PAV MRKR TY II-C-R	
S	REFL PAV MRKR TY I-C	
T	REFL PAV MRK TY I (W)(BIKE ARROW)(100MIL)	⊙
U	REFL PAV MRK TY I (Y)(8")(SLD)(100 MIL)	★
V	REFL PAV MRK TY I (W)(DBL ARROW)(100 MIL)	⊙
W	REFL PAV MRK TY I (Y)(MED NOSE)(100 MIL)	⊙

⇨ DIRECTION OF TRAFFIC FLOW

OBJECT MARKER ASSEMBLY (OM-2Z)(FLX)SLF

OBJECT MARKER ASSEMBLY (OM-2X)(WC)GND

DELINEATOR ASSEMBLY (D-SW)(SZ-1)(FLX)GF3

★ TYPE II MARKINGS SHALL BE USED FOR PAVEMENT SEALER. REFER TO SPECIAL SPECIFICATION 6110.

⊙ TYPE II MARKINGS SHALL BE USED FOR PAVEMENT SEALER. REFER TO STANDARD SPECIFICATION 666.

STATE OF TEXAS
JOSE A. SANCHEZ
87890
LICENSED
PROFESSIONAL ENGINEER

2007.12.07

JOSE A. SANCHEZ DATE

NO.	REVISION	BY	DATE

CP&Y Chiang, Patel & Yerby, Inc.

TEDSI INFRASTRUCTURE GROUP
Consulting Engineers
10999 IH 10 West • Suite 330
San Antonio, Texas 78230
(210) 858-0610

BEXAR COUNTY
PUBLIC WORKS DIVISION

F.M. 2696 (BLANCO ROAD)

PAVEMENT MARKINGS LAYOUT

STA 114+50.00 TO STA 125+50.00

SHEET 11 OF 19

Designed: RC	STATE	BEXAR COUNTY FILE NUMBER	PLAN SET NO.
Checked: JAS	TEXAS		737
Drawn: RC	COUNTY		OF
Checked: JAS	BEXAR		842

p:\2007\27958-1-blanco rd south\design\cs\Traffic\Pavement Markings\8102SSRDSL1.DGN
12/7/2007 1:49:36 PM

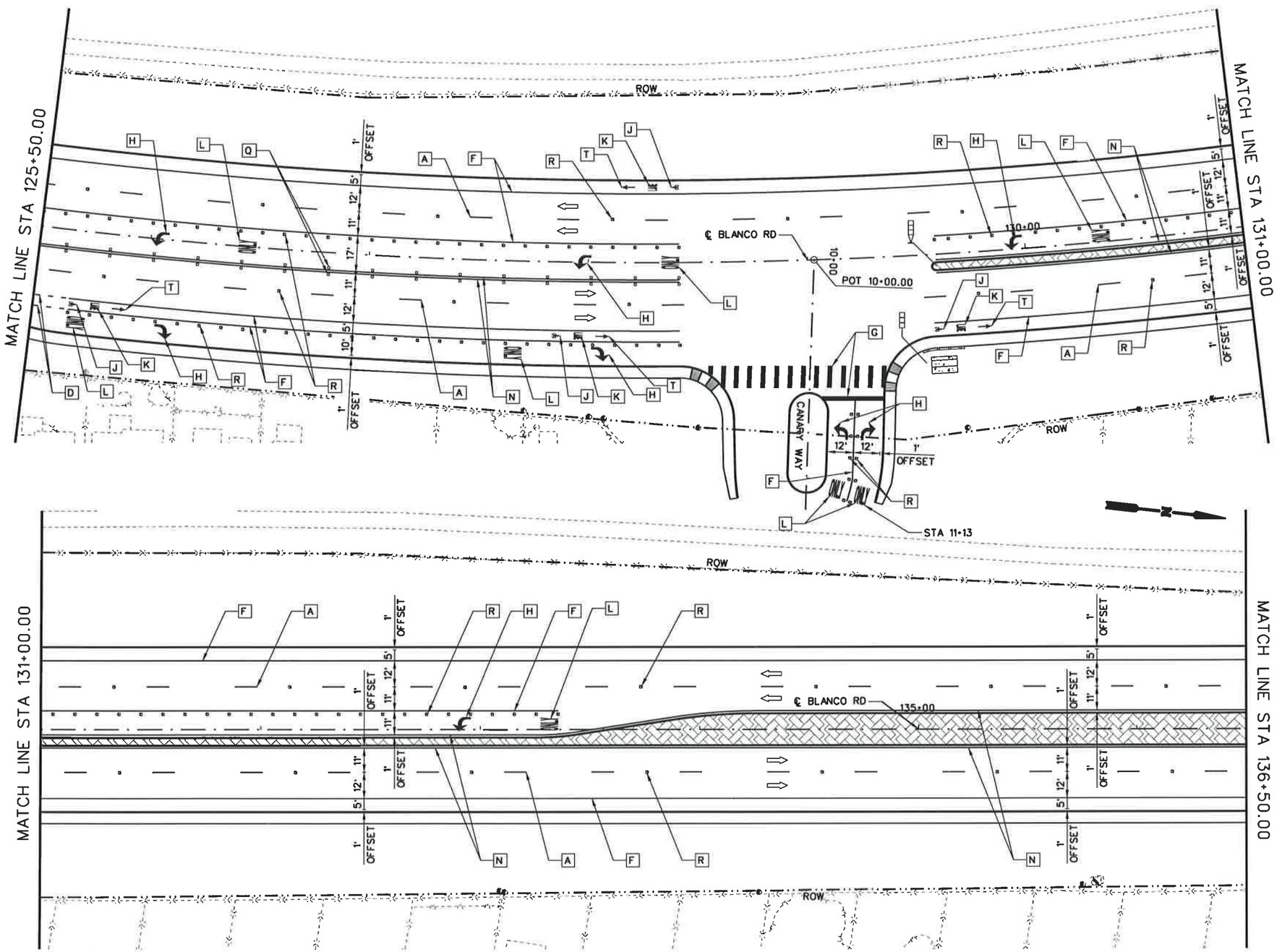

25 12.5 0 25 50
HORIZ. SCALE FEET

LEGEND

A	REFL PAV MRK TY I (W)(4")(BRK)(100 MIL)	★
B	REFL PAV MRK TY I (W)(4")(DOT)(100 MIL)	★
C	REFL PAV MRK TY I (W)(4")(SLD)(100 MIL)	★
D	REFL PAV MRK TY I (W)(8")(DOT)(100 MIL)	★
E	REFL PAV MRK TY I (W)(8")(LNDP)(100 MIL)	★
F	REFL PAV MRK TY I (W)(8")(SLD)(100 MIL)	★
G	REFL PAV MRK TY I (W)(24")(SLD)(100 MIL)	★
H	REFL PAV MRK TY I (W)(ARROW)(100 MIL)	⊙
J	REFL PAV MRK TY I (W)(BIKE SYML)(100MIL)	⊙
K	REFL PAV MRK TY I (W)(BIKE WORD)(100MIL)	⊙
L	REFL PAV MRK TY I (W)(WORD)(100 MIL)	⊙
M	REFL PAV MRK TY I (Y)(4")(BRK)(100 MIL)	★
N	REFL PAV MRK TY I (Y)(4")(SLD)(100 MIL)	★
P	REFL PAV MRK TY I (Y)(24")(SLD)(100 MIL)	★
Q	REFL PAV MRKR TY II-A-A	
R	REFL PAV MRKR TY II-C-R	
S	REFL PAV MRKR TY I-C	
T	REFL PAV MRK TY I (W)(BIKE ARROW)(100MIL)	⊙
U	REFL PAV MRK TY I (Y)(8")(SLD)(100 MIL)	★
V	REFL PAV MRK TY I (W)(DBL ARROW)(100 MIL)	⊙
W	REFL PAV MRK TY I (Y)(MED NOSE)(100 MIL)	⊙

⇨ DIRECTION OF TRAFFIC FLOW

OBJECT MARKER ASSEMBLY (OM-2Z)(FLX)SLF

OBJECT MARKER ASSEMBLY (OM-2X)(WC)GND

DELINEATOR ASSEMBLY (D-SW)(SZ-1)(FLX)GF3

★ TYPE II MARKINGS SHALL BE USED FOR PAVEMENT SEALER. REFER TO SPECIAL SPECIFICATION 6110.

⊙ TYPE II MARKINGS SHALL BE USED FOR PAVEMENT SEALER. REFER TO STANDARD SPECIFICATION 666.

STATE OF TEXAS
JOSE A. SANCHEZ
87890
LICENSED
PROFESSIONAL ENGINEER

2007.12.07

JOSE A. SANCHEZ DATE

NO.	REVISION	BY	DATE

CP&Y Chiang, Patel & Yerby, Inc.

TEDSI INFRASTRUCTURE GROUP
Consulting Engineers
10999 IH 10 West • Suite 320
San Antonio, Texas 78230
(210) 858-0610

BEXAR COUNTY
PUBLIC WORKS DIVISION

F.M. 2696 (BLANCO ROAD)

PAVEMENT MARKINGS LAYOUT

STA 125+50.00 TO STA 136+50.00

SHEET 12 OF 19

Designed: RC	STATE	BEXAR COUNTY FILE NUMBER	PLAN SET NO.
Checked: JAS	TEXAS		738
Drawn: RC	COUNTY		OF
Checked: JAS	BEXAR		842

p:\2007\27958-1-blanco rd south\design\cs\Traffic\Pavement Markings\6102SSRDSL12.DGN
12/7/2007 1:49:39 PM

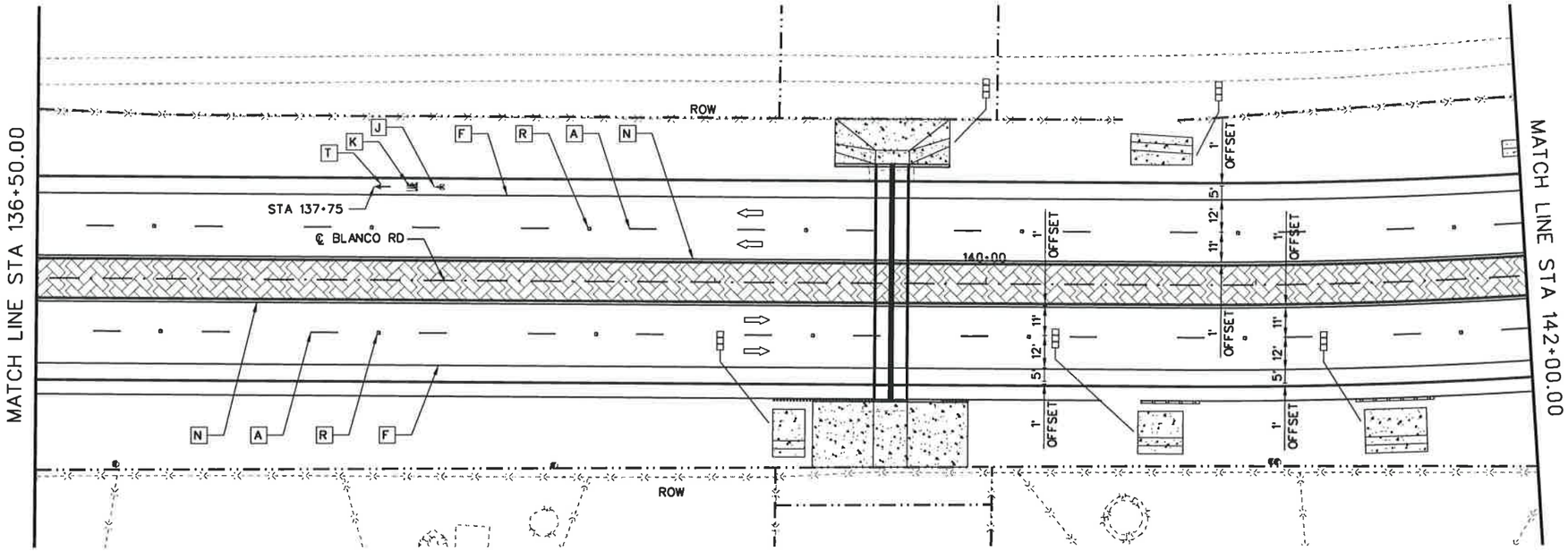

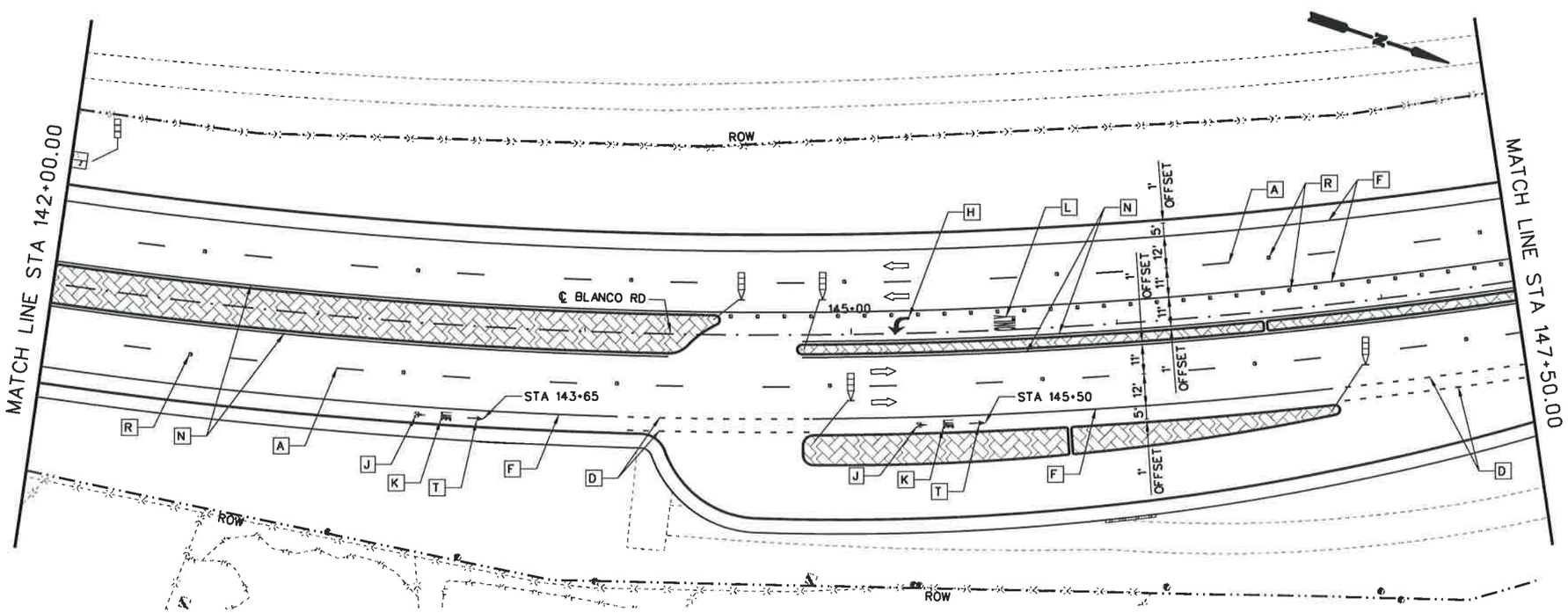

25 12.5 0 25 50
HORIZ. SCALE FEET

LEGEND

A	REFL PAV MRK TY I (W)(4")(BRK)(100 MIL)	★
B	REFL PAV MRK TY I (W)(4")(DOT)(100 MIL)	★
C	REFL PAV MRK TY I (W)(4")(SLD)(100 MIL)	★
D	REFL PAV MRK TY I (W)(8")(DOT)(100 MIL)	★
E	REFL PAV MRK TY I (W)(8")(LNDP)(100 MIL)	★
F	REFL PAV MRK TY I (W)(8")(SLD)(100 MIL)	★
G	REFL PAV MRK TY I (W)(24")(SLD)(100 MIL)	★
H	REFL PAV MRK TY I (W)(ARROW)(100 MIL)	⊙
J	REFL PAV MRK TY I (W)(BIKE SYML)(100MIL)	⊙
K	REFL PAV MRK TY I (W)(BIKE WORD)(100MIL)	⊙
L	REFL PAV MRK TY I (W)(WORD)(100 MIL)	⊙
M	REFL PAV MRK TY I (Y)(4")(BRK)(100 MIL)	★
N	REFL PAV MRK TY I (Y)(4")(SLD)(100 MIL)	★
P	REFL PAV MRK TY I (Y)(24")(SLD)(100 MIL)	★
Q	REFL PAV MRKR TY II-A-A	
R	REFL PAV MRKR TY II-C-R	
S	REFL PAV MRKR TY I-C	
T	REFL PAV MRK TY I (W)(BIKE ARROW)(100MIL)	⊙
U	REFL PAV MRK TY I (Y)(8")(SLD)(100 MIL)	★
V	REFL PAV MRK TY I (W)(DBL ARROW)(100 MIL)	⊙
W	REFL PAV MRK TY I (Y)(MED NOSE)(100 MIL)	⊙

⇨ DIRECTION OF TRAFFIC FLOW

OBJECT MARKER ASSEMBLY (OM-2Z)(FLX)SLF

OBJECT MARKER ASSEMBLY (OM-2X)(WC)GND

DELINEATOR ASSEMBLY (D-SW)(SZ-1)(FLX)GF3

★ TYPE II MARKINGS SHALL BE USED FOR PAVEMENT SEALER. REFER TO SPECIAL SPECIFICATION 6110.

⊙ TYPE II MARKINGS SHALL BE USED FOR PAVEMENT SEALER. REFER TO STANDARD SPECIFICATION 666.

STATE OF TEXAS
JOSE A. SANCHEZ
87890
LICENSED
PROFESSIONAL ENGINEER

2007.12.07

JOSE A. SANCHEZ DATE

NO.	REVISION	BY	DATE

CP&Y Chiang, Patel & Yerby, Inc.

TEDSI INFRASTRUCTURE GROUP
Consulting Engineers
10999 IH 10 West • Suite 320
San Antonio, Texas 78230
(210) 858-0610

BEXAR COUNTY
PUBLIC WORKS DIVISION

F.M. 2696 (BLANCO ROAD)

PAVEMENT MARKINGS LAYOUT

STA 136+50.00 TO STA 147+50.00

SHEET 13 OF 19

Designed: RC	STATE	BEXAR COUNTY FILE NUMBER	PLAN SET NO. 739
Checked: JAS	TEXAS		
Drawn: RC	COUNTY		OF
Checked: JAS	BEXAR		842

p:\2007\27958-1-blanco rd south\design\cs\Traffic\Pavement Markings\6102SSRDSL13.DGN
12/7/2007 1:49:43 PM

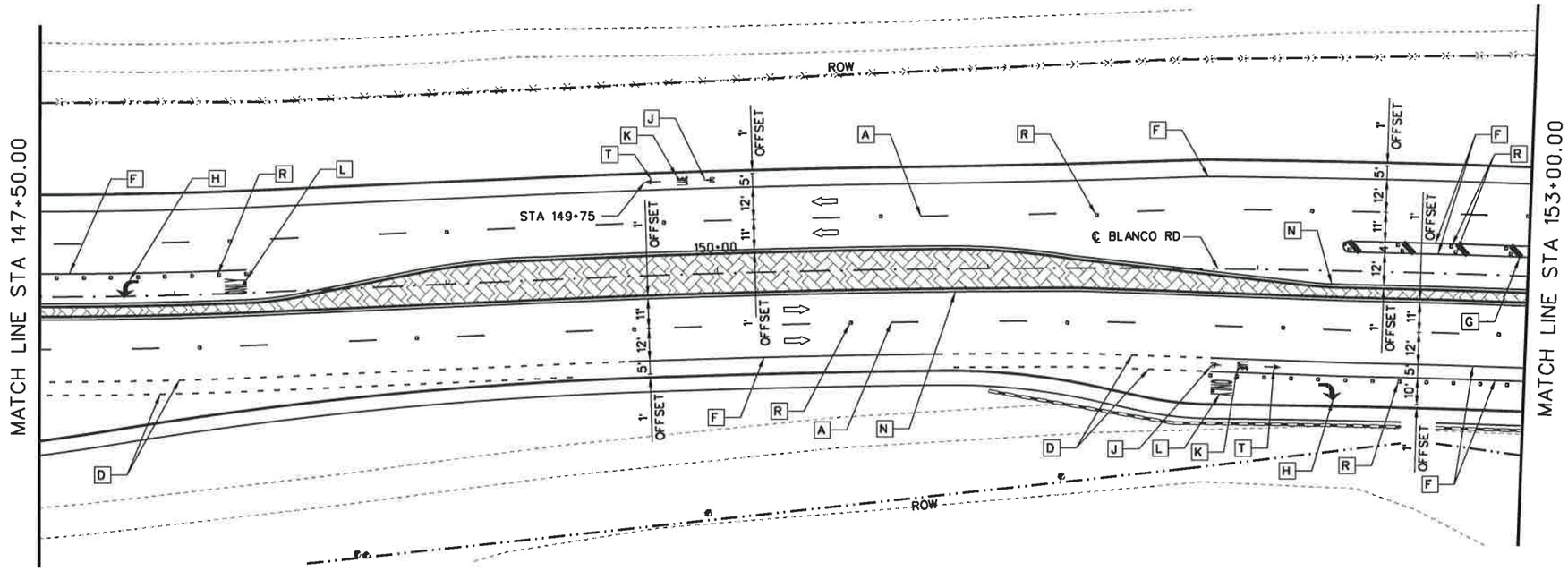

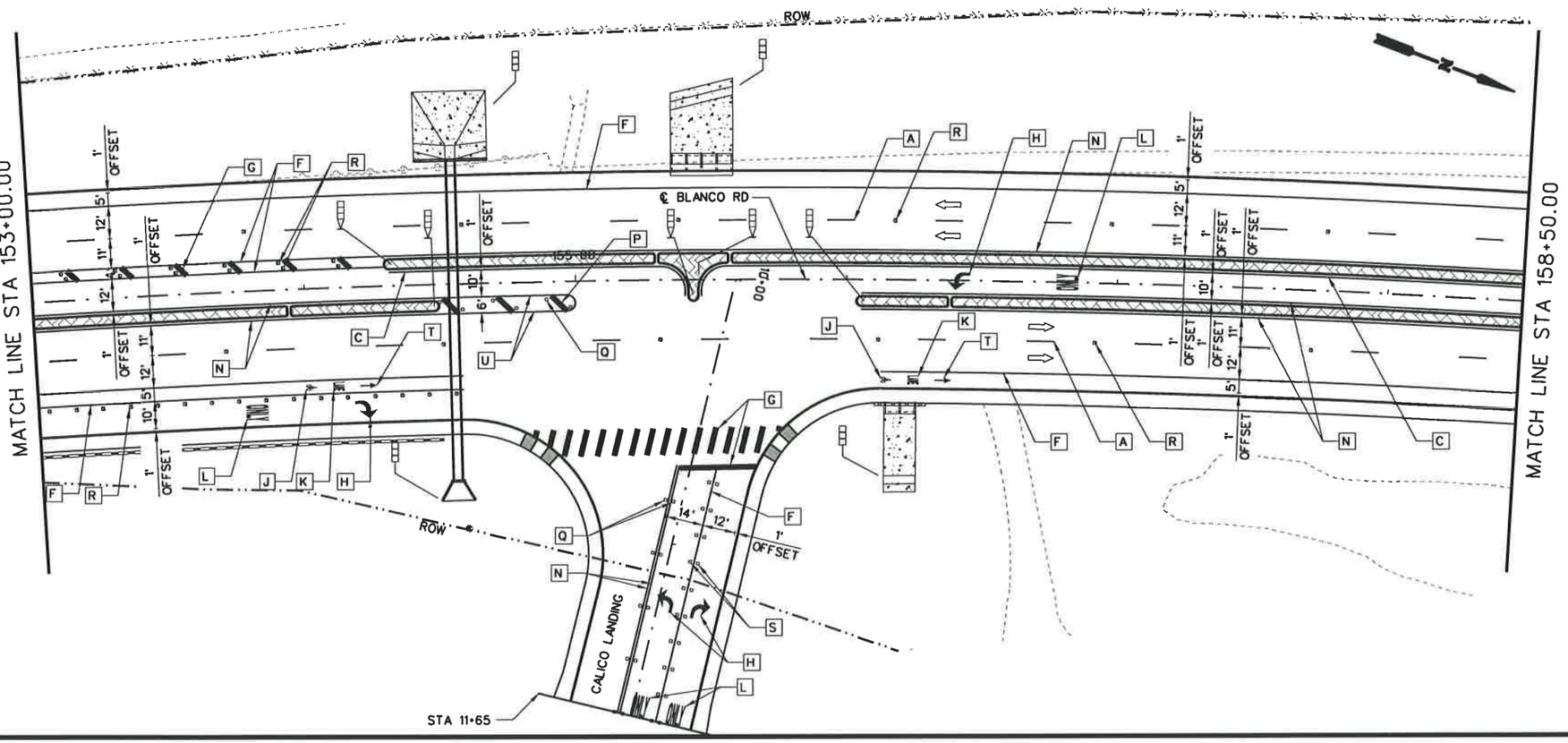

25 12.5 0 25 50
HORIZ. SCALE FEET

LEGEND

A	REFL PAV MRK TY I (W)(4")(BRK)(100 MIL)	★
B	REFL PAV MRK TY I (W)(4")(DOT)(100 MIL)	★
C	REFL PAV MRK TY I (W)(4")(SLD)(100 MIL)	★
D	REFL PAV MRK TY I (W)(8")(DOT)(100 MIL)	★
E	REFL PAV MRK TY I (W)(8")(LNDP)(100 MIL)	★
F	REFL PAV MRK TY I (W)(8")(SLD)(100 MIL)	★
G	REFL PAV MRK TY I (W)(24")(SLD)(100 MIL)	★
H	REFL PAV MRK TY I (W)(ARROW)(100 MIL)	⊙
J	REFL PAV MRK TY I (W)(BIKE SYML)(100MIL)	⊙
K	REFL PAV MRK TY I (W)(BIKE WORD)(100MIL)	⊙
L	REFL PAV MRK TY I (W)(WORD)(100 MIL)	⊙
M	REFL PAV MRK TY I (Y)(4")(BRK)(100 MIL)	★
N	REFL PAV MRK TY I (Y)(4")(SLD)(100 MIL)	★
P	REFL PAV MRK TY I (Y)(24")(SLD)(100 MIL)	★
Q	REFL PAV MRKR TY II-A-A	
R	REFL PAV MRKR TY II-C-R	
S	REFL PAV MRKR TY I-C	
T	REFL PAV MRK TY I (W)(BIKE ARROW)(100MIL)	⊙
U	REFL PAV MRK TY I (Y)(8")(SLD)(100 MIL)	★
V	REFL PAV MRK TY I (W)(DBL ARROW)(100 MIL)	⊙
W	REFL PAV MRK TY I (Y)(MED NOSE)(100 MIL)	⊙

⇨ DIRECTION OF TRAFFIC FLOW

OBJECT MARKER ASSEMBLY (OM-2Z)(FLX)SLF

OBJECT MARKER ASSEMBLY (OM-2X)(WC)GND

DELINEATOR ASSEMBLY (D-SW)(SZ-1)(FLX)GF3

★ TYPE II MARKINGS SHALL BE USED FOR PAVEMENT SEALER. REFER TO SPECIAL SPECIFICATION 6110.

⊙ TYPE II MARKINGS SHALL BE USED FOR PAVEMENT SEALER. REFER TO STANDARD SPECIFICATION 666.

STATE OF TEXAS
JOSE A. SANCHEZ
87890
LICENSED
PROFESSIONAL ENGINEER

JOSE A. SANCHEZ — DATE 2007.12.07

NO.	REVISION	BY	DATE

CP&Y Chiang, Patel & Yerby, Inc.

TEDSI INFRASTRUCTURE GROUP
Consulting Engineers
10999 IH 10 West • Suite 320
San Antonio, Texas 78230
(210) 858-6610

BEXAR COUNTY
PUBLIC WORKS DIVISION

F.M. 2696 (BLANCO ROAD)

PAVEMENT MARKINGS LAYOUT

STA 147+50.00 TO STA 158+50.00

SHEET 14 OF 19

Designed: RC	STATE	BEXAR COUNTY FILE NUMBER	PLAN SET No.
Checked: JAS	TEXAS		740
Drawn: RC	COUNTY		OF
Checked: JAS	BEXAR		842

p:\2007\27958-1-blanco rd south\design\cs\Traffic\Pavement Markings\6102SSR05L14.DGN
12/7/2007 1:49:47 PM

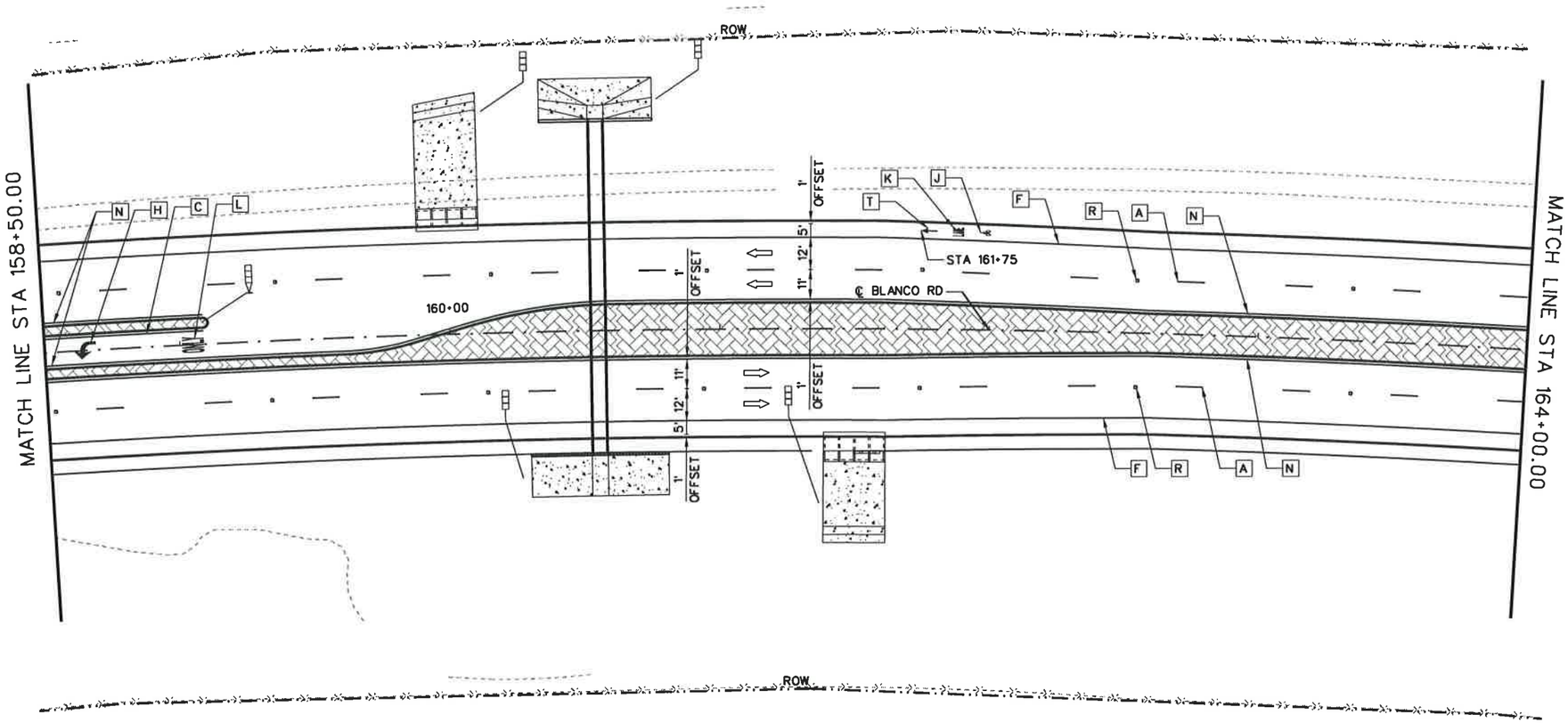

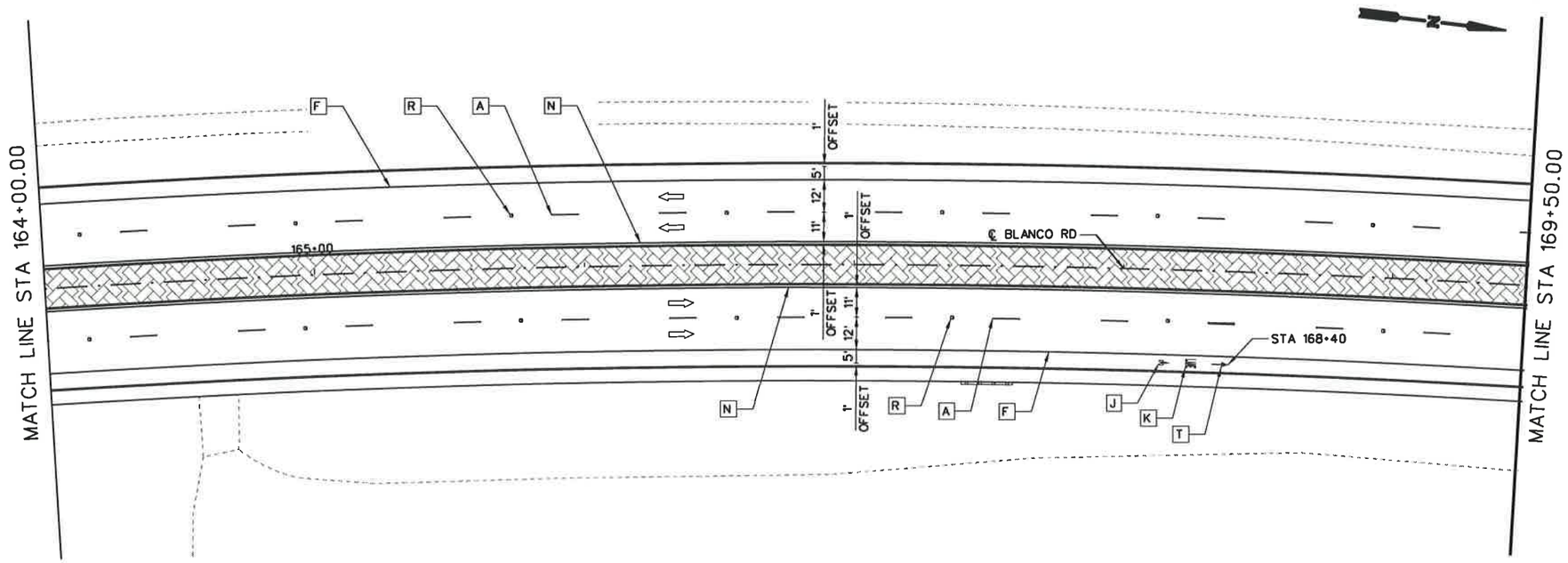

25 12.5 0 25 50

HORIZ. SCALE FEET

LEGEND

A	REFL PAV MRK TY I (W)(4")(BRK)(100 MIL)	★
B	REFL PAV MRK TY I (W)(4")(DOT)(100 MIL)	★
C	REFL PAV MRK TY I (W)(4")(SLD)(100 MIL)	★
D	REFL PAV MRK TY I (W)(8")(DOT)(100 MIL)	★
E	REFL PAV MRK TY I (W)(8")(LNDP)(100 MIL)	★
F	REFL PAV MRK TY I (W)(8")(SLD)(100 MIL)	★
G	REFL PAV MRK TY I (W)(24")(SLD)(100 MIL)	★
H	REFL PAV MRK TY I (W)(ARROW)(100 MIL)	⊙
J	REFL PAV MRK TY I (W)(BIKE SYML)(100MIL)	⊙
K	REFL PAV MRK TY I (W)(BIKE WORD)(100MIL)	⊙
L	REFL PAV MRK TY I (W)(WORD)(100 MIL)	⊙
M	REFL PAV MRK TY I (Y)(4")(BRK)(100 MIL)	★
N	REFL PAV MRK TY I (Y)(4")(SLD)(100 MIL)	★
P	REFL PAV MRK TY I (Y)(24")(SLD)(100 MIL)	★
Q	REFL PAV MRKR TY II-A-A	
R	REFL PAV MRKR TY II-C-R	
S	REFL PAV MRKR TY I-C	
T	REFL PAV MRK TY I (W)(BIKE ARROW)(100MIL)	⊙
U	REFL PAV MRK TY I (Y)(8")(SLD)(100 MIL)	★
V	REFL PAV MRK TY I (W)(DBL ARROW)(100 MIL)	⊙
W	REFL PAV MRK TY I (Y)(MED NOSE)(100 MIL)	⊙

⇨ DIRECTION OF TRAFFIC FLOW

OBJECT MARKER ASSEMBLY (OM-2Z)(FLX)SLF

OBJECT MARKER ASSEMBLY (OM-2X)(WC)GND

DELINEATOR ASSEMBLY (D-SW)(SZ-1)(FLX)GF3

★ TYPE II MARKINGS SHALL BE USED FOR PAVEMENT SEALER. REFER TO SPECIAL SPECIFICATION 6110.

⊙ TYPE II MARKINGS SHALL BE USED FOR PAVEMENT SEALER. REFER TO STANDARD SPECIFICATION 666.

STATE OF TEXAS
JOSE A. SANCHEZ
87890
LICENSED
PROFESSIONAL ENGINEER

2007.12.07

JOSE A. SANCHEZ DATE

NO.	REVISION	BY	DATE

CP&Y Chiang, Patel & Yerby, Inc.

TEDSI INFRASTRUCTURE GROUP
Consulting Engineers
10999 IH 10 West • Suite 320
San Antonio, Texas 78230
(210) 858-6410

BEXAR COUNTY
PUBLIC WORKS DIVISION

F.M. 2696 (BLANCO ROAD)

PAVEMENT MARKINGS LAYOUT

STA 158+50 TO STA 169+50.00

SHEET 15 OF 19

Designed: RC	STATE	BEXAR COUNTY FILE NUMBER	PLAN SET NO.
Checked: JAS	TEXAS		741
Drawn: RC	COUNTY		OF
Checked: JAS	BEXAR		842

p:\2007\27958-1-blanco rd south\design\csj\Traffic\Pavement Markings\61025SRDSL15.DGN
12/7/2007 1:49:51 PM

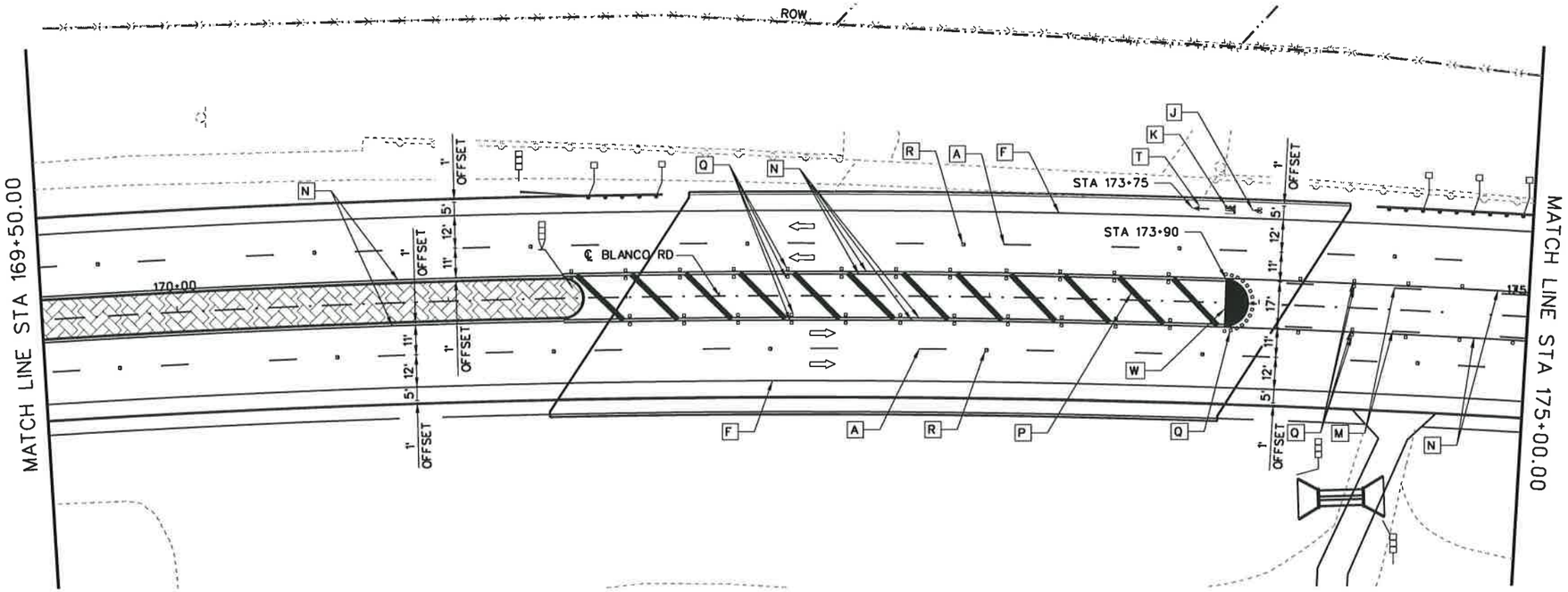

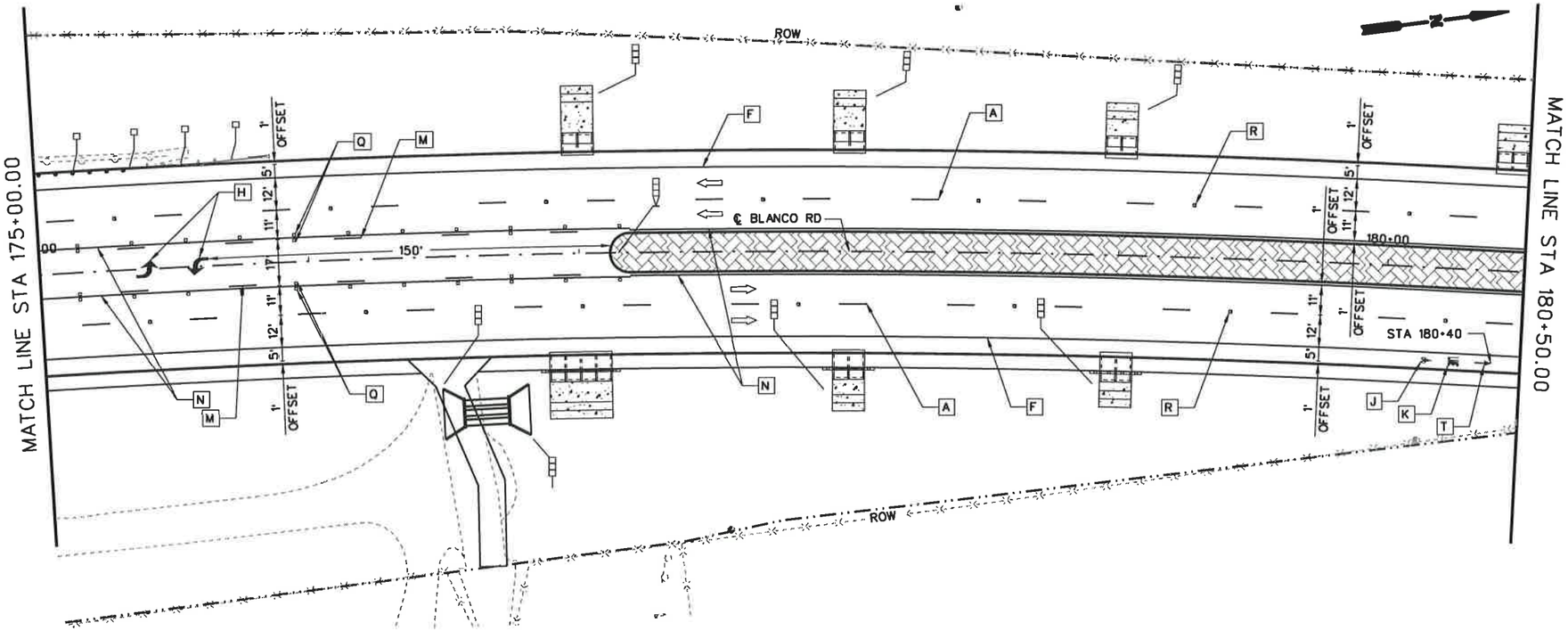

25 12.5 0 25 50
SCALE FEET

LEGEND

A	REFL PAV MRK TY I (W)(4")(BRK)(100 MIL)	★
B	REFL PAV MRK TY I (W)(4")(DOT)(100 MIL)	★
C	REFL PAV MRK TY I (W)(4")(SLD)(100 MIL)	★
D	REFL PAV MRK TY I (W)(8")(DOT)(100 MIL)	★
E	REFL PAV MRK TY I (W)(8")(LNDP)(100 MIL)	★
F	REFL PAV MRK TY I (W)(8")(SLD)(100 MIL)	★
G	REFL PAV MRK TY I (W)(24")(SLD)(100 MIL)	★
H	REFL PAV MRK TY I (W)(ARROW)(100 MIL)	⊙
J	REFL PAV MRK TY I (W)(BIKE SYML)(100MIL)	⊙
K	REFL PAV MRK TY I (W)(BIKE WORD)(100MIL)	⊙
L	REFL PAV MRK TY I (W)(WORD)(100 MIL)	⊙
M	REFL PAV MRK TY I (Y)(4")(BRK)(100 MIL)	★
N	REFL PAV MRK TY I (Y)(4")(SLD)(100 MIL)	★
P	REFL PAV MRK TY I (Y)(24")(SLD)(100 MIL)	★
Q	REFL PAV MRKR TY II-A-A	
R	REFL PAV MRKR TY II-C-R	
S	REFL PAV MRKR TY I-C	
T	REFL PAV MRK TY I (W)(BIKE ARROW)(100MIL)	⊙
U	REFL PAV MRK TY I (Y)(8")(SLD)(100 MIL)	★
V	REFL PAV MRK TY I (W)(DBL ARROW)(100 MIL)	⊙
W	REFL PAV MRK TY I (Y)(MED NOSE)(100 MIL)	⊙

⇨ DIRECTION OF TRAFFIC FLOW

OBJECT MARKER ASSEMBLY (OM-2Z)(FLX)SLF

OBJECT MARKER ASSEMBLY (OM-2X)(WC)GND

DELINEATOR ASSEMBLY (D-SW)(SZ-1)(FLX)GF3

★ TYPE II MARKINGS SHALL BE USED FOR PAVEMENT SEALER. REFER TO SPECIAL SPECIFICATION 6110.

⊙ TYPE II MARKINGS SHALL BE USED FOR PAVEMENT SEALER. REFER TO STANDARD SPECIFICATION 666.

STATE OF TEXAS
JOSE A. SANCHEZ
87890
LICENSED
PROFESSIONAL ENGINEER

2007.12.07

JOSE A. SANCHEZ DATE

NO.	REVISION	BY	DATE

CP&Y Chiang, Patel & Yerby, Inc.

TEDSI INFRASTRUCTURE GROUP
Consulting Engineers
10999 IH 10 West • Suite 320
San Antonio, Texas 78230
(210) 858-0610

BEXAR COUNTY
PUBLIC WORKS DIVISION

F.M. 2696 (BLANCO ROAD)

PAVEMENT MARKINGS LAYOUT

STA 169+50.00 TO STA 180+50.00

SHEET 16 OF 19

Designed: RC	STATE	BEXAR COUNTY FILE NUMBER	PLAN SET N. 742
Checked: JAS	TEXAS		OF
Drawn: RC	COUNTY		842
Checked: JAS	BEXAR		

p:\2007\27958-1-blanco rd south\design\csj\Traffic\Pavement Markings\6102SSR05L16.DGN
12/7/2007 1:49:55 PM

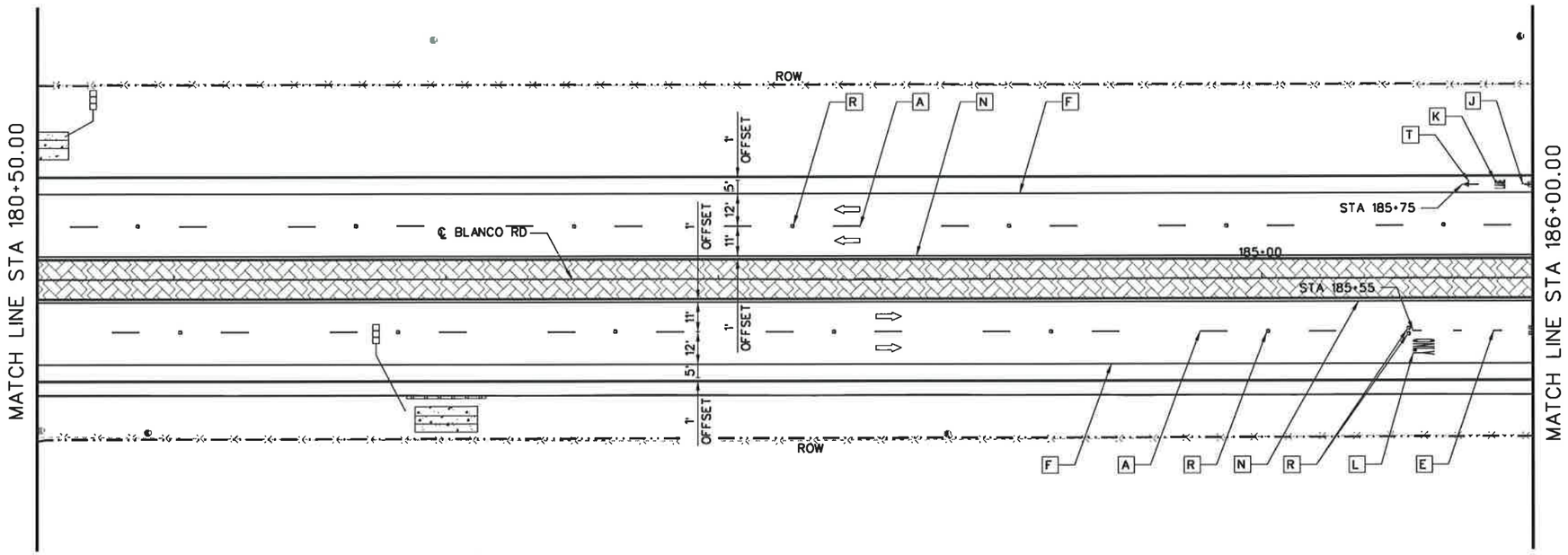

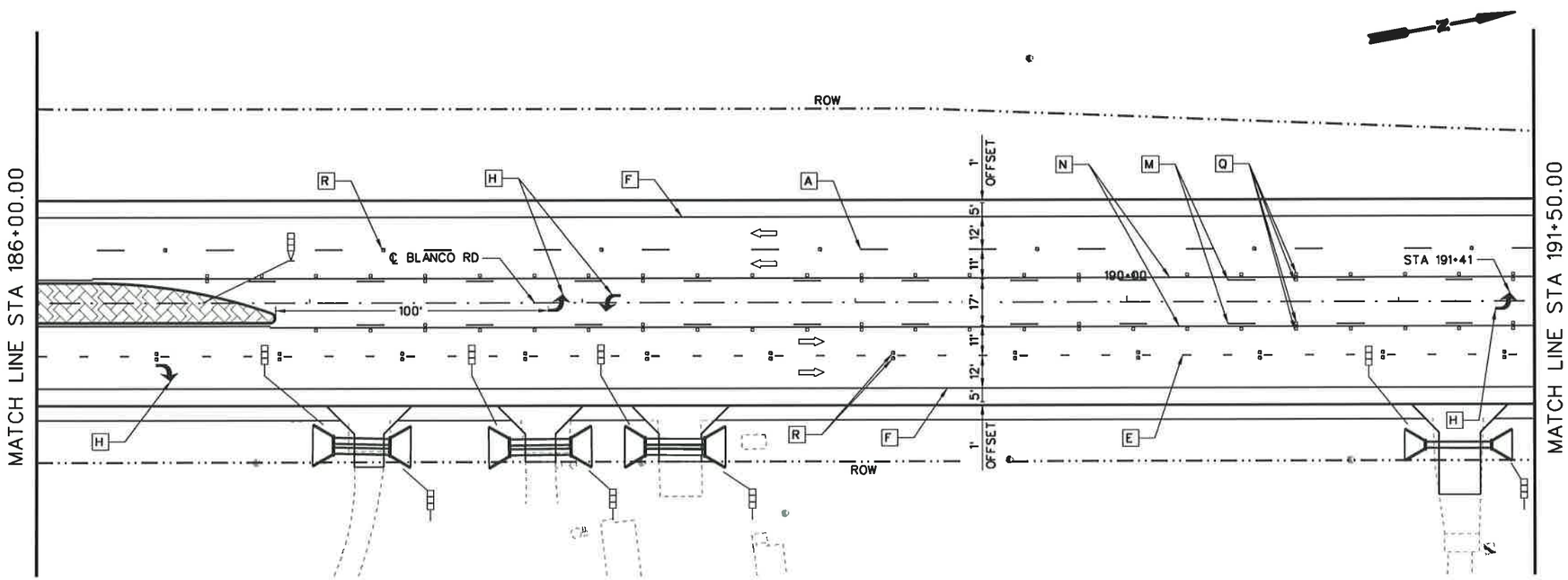

25 12.5 0 25 50

HORIZ. SCALE FEET

LEGEND

A	REFL PAV MRK TY I (W)(4")(BRK)(100 MIL)	★
B	REFL PAV MRK TY I (W)(4")(DOT)(100 MIL)	★
C	REFL PAV MRK TY I (W)(4")(SLD)(100 MIL)	★
D	REFL PAV MRK TY I (W)(8")(DOT)(100 MIL)	★
E	REFL PAV MRK TY I (W)(8")(LNDP)(100 MIL)	★
F	REFL PAV MRK TY I (W)(8")(SLD)(100 MIL)	★
G	REFL PAV MRK TY I (W)(24")(SLD)(100 MIL)	★
H	REFL PAV MRK TY I (W)(ARROW)(100 MIL)	⊙
J	REFL PAV MRK TY I (W)(BIKE SYML)(100MIL)	⊙
K	REFL PAV MRK TY I (W)(BIKE WORD)(100MIL)	⊙
L	REFL PAV MRK TY I (W)(WORD)(100 MIL)	⊙
M	REFL PAV MRK TY I (Y)(4")(BRK)(100 MIL)	★
N	REFL PAV MRK TY I (Y)(4")(SLD)(100 MIL)	★
P	REFL PAV MRK TY I (Y)(24")(SLD)(100 MIL)	★
Q	REFL PAV MRKR TY II-A-A	
R	REFL PAV MRKR TY II-C-R	
S	REFL PAV MRKR TY I-C	
T	REFL PAV MRK TY I (W)(BIKE ARROW)(100MIL)	⊙
U	REFL PAV MRK TY I (Y)(8")(SLD)(100 MIL)	★
V	REFL PAV MRK TY I (W)(DBL ARROW)(100 MIL)	⊙
W	REFL PAV MRK TY I (Y)(MED NOSE)(100 MIL)	⊙

⇨ DIRECTION OF TRAFFIC FLOW

OBJECT MARKER ASSEMBLY (OM-2Z)(FLX)SLF

OBJECT MARKER ASSEMBLY (OM-2X)(WC)GND

DELINEATOR ASSEMBLY (D-SW)(SZ-1)(FLX)GF3

★ TYPE II MARKINGS SHALL BE USED FOR PAVEMENT SEALER. REFER TO SPECIAL SPECIFICATION 6110.

⊙ TYPE II MARKINGS SHALL BE USED FOR PAVEMENT SEALER. REFER TO STANDARD SPECIFICATION 666.

STATE OF TEXAS
JOSE A. SANCHEZ
87890
LICENSED
PROFESSIONAL ENGINEER

2007.12.07

JOSE A. SANCHEZ DATE

NO.	REVISION	BY	DATE

CP&Y Chiang, Patel & Yerby, Inc.

TEDSI INFRASTRUCTURE GROUP
Consulting Engineers
10999 IH 10 West • Suite 320
San Antonio, Texas 78230
(210) 858-8610

BEXAR COUNTY
PUBLIC WORKS DIVISION

F.M. 2696 (BLANCO ROAD)

PAVEMENT MARKINGS LAYOUT

STA 180+50.00 TO STA 191+50.00

SHEET 17 OF 19

Designed: RC	STATE	BEXAR COUNTY FILE NUMBER	PLAN SET NO.
Checked: JAS	TEXAS		743
Drawn: RC	COUNTY		OF
Checked: JAS	BEXAR		842

p:\2007\27958-1-blanco rd south\design\cs\Traffic\Pavement Markings\6102SSRDSL17.DGN
12/7/2007 1:49:59 PM

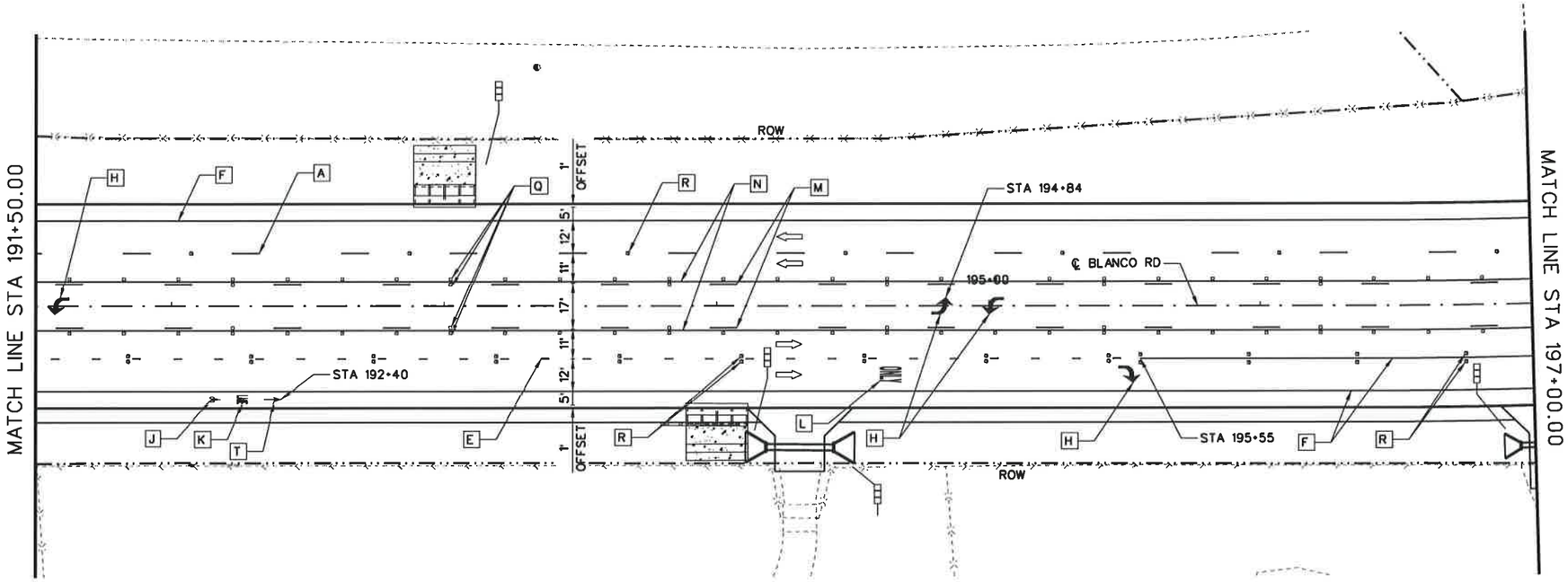

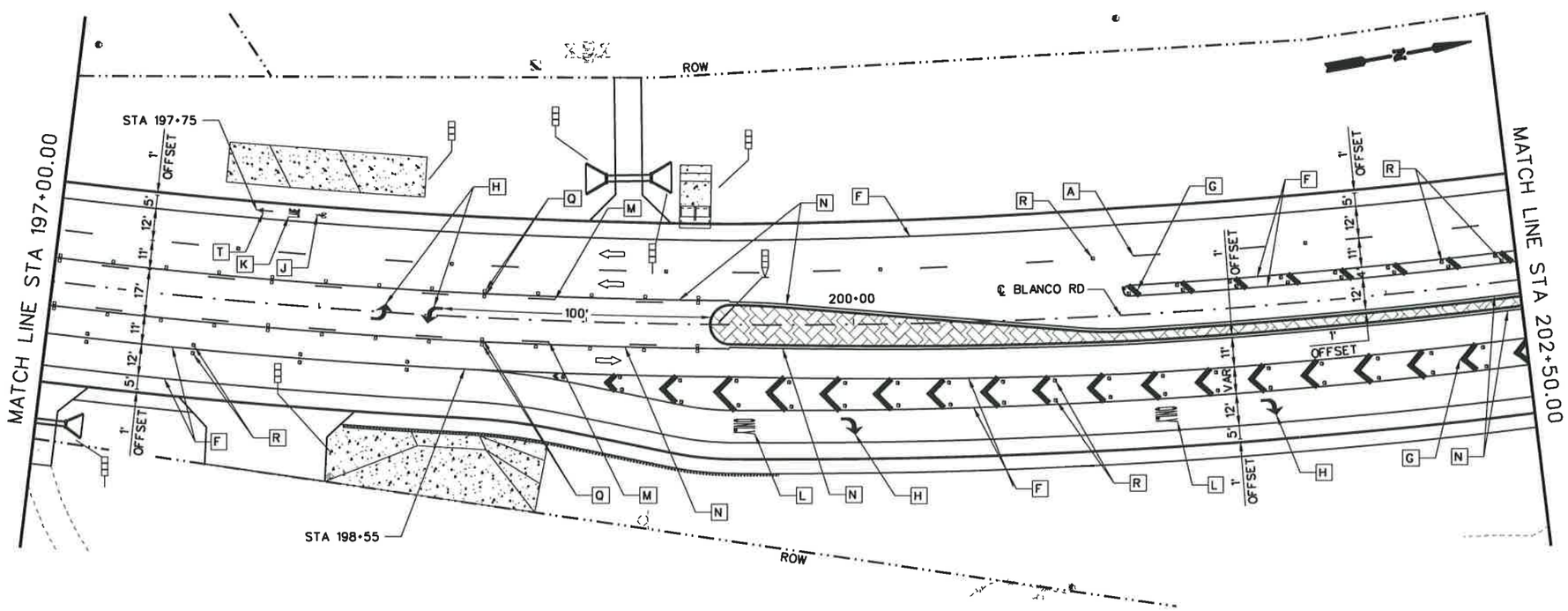

25 12.5 0 25 50

HORIZ. SCALE FEET

LEGEND

A	REFL PAV MRK TY I (W)(4")(BRK)(100 MIL)	★
B	REFL PAV MRK TY I (W)(4")(DOT)(100 MIL)	★
C	REFL PAV MRK TY I (W)(4")(SLD)(100 MIL)	★
D	REFL PAV MRK TY I (W)(8")(DOT)(100 MIL)	★
E	REFL PAV MRK TY I (W)(8")(LNDP)(100 MIL)	★
F	REFL PAV MRK TY I (W)(8")(SLD)(100 MIL)	★
G	REFL PAV MRK TY I (W)(24")(SLD)(100 MIL)	★
H	REFL PAV MRK TY I (W)(ARROW)(100 MIL)	⊙
J	REFL PAV MRK TY I (W)(BIKE SYML)(100MIL)	⊙
K	REFL PAV MRK TY I (W)(BIKE WORD)(100MIL)	⊙
L	REFL PAV MRK TY I (W)(WORD)(100 MIL)	⊙
M	REFL PAV MRK TY I (Y)(4")(BRK)(100 MIL)	★
N	REFL PAV MRK TY I (Y)(4")(SLD)(100 MIL)	★
P	REFL PAV MRK TY I (Y)(24")(SLD)(100 MIL)	★
Q	REFL PAV MRKR TY II-A-A	
R	REFL PAV MRKR TY II-C-R	
S	REFL PAV MRKR TY I-C	
T	REFL PAV MRK TY I (W)(BIKE ARROW)(100MIL)	⊙
U	REFL PAV MRK TY I (Y)(8")(SLD)(100 MIL)	★
V	REFL PAV MRK TY I (W)(DBL ARROW)(100 MIL)	⊙
W	REFL PAV MRK TY I (Y)(MED NOSE)(100 MIL)	⊙

⇨ DIRECTION OF TRAFFIC FLOW

OBJECT MARKER ASSEMBLY (OM-2Z)(FLX)SLF

OBJECT MARKER ASSEMBLY (OM-2X)(WC)GND

DELINEATOR ASSEMBLY (D-SW)(SZ-1)(FLX)GF3

★ TYPE II MARKINGS SHALL BE USED FOR PAVEMENT SEALER. REFER TO SPECIAL SPECIFICATION 6110.

⊙ TYPE II MARKINGS SHALL BE USED FOR PAVEMENT SEALER. REFER TO STANDARD SPECIFICATION 666.

STATE OF TEXAS
JOSE A. SANCHEZ
87890
LICENSED
PROFESSIONAL ENGINEER

2007.12.07

JOSE A. SANCHEZ DATE

NO.	REVISION	BY	DATE

CP&Y Chiang, Patel & Yerby, Inc.

TEDSI INFRASTRUCTURE GROUP
Consulting Engineers
10999 IH 10 West ♦ Suite 320
San Antonio, Texas 78230
(210) 858-0610

BEXAR COUNTY
PUBLIC WORKS DIVISION

F.M. 2696 (BLANCO ROAD)

PAVEMENT MARKINGS LAYOUT

STA 191+50.00 TO STA 202+50.00

SHEET 18 OF 19

Designed: RC	STATE	BEXAR COUNTY FILE NUMBER	PLAN SET NO.
Checked: JAS	TEXAS		747
Drawn: RC	COUNTY		OF
Checked: JAS	BEXAR		842

p:\2007\27958-1-blanco rd south\design\cs\Traffic\Pavement Markings\6102SSR05L18.DGN
1:50:05 PM
12/7/2007

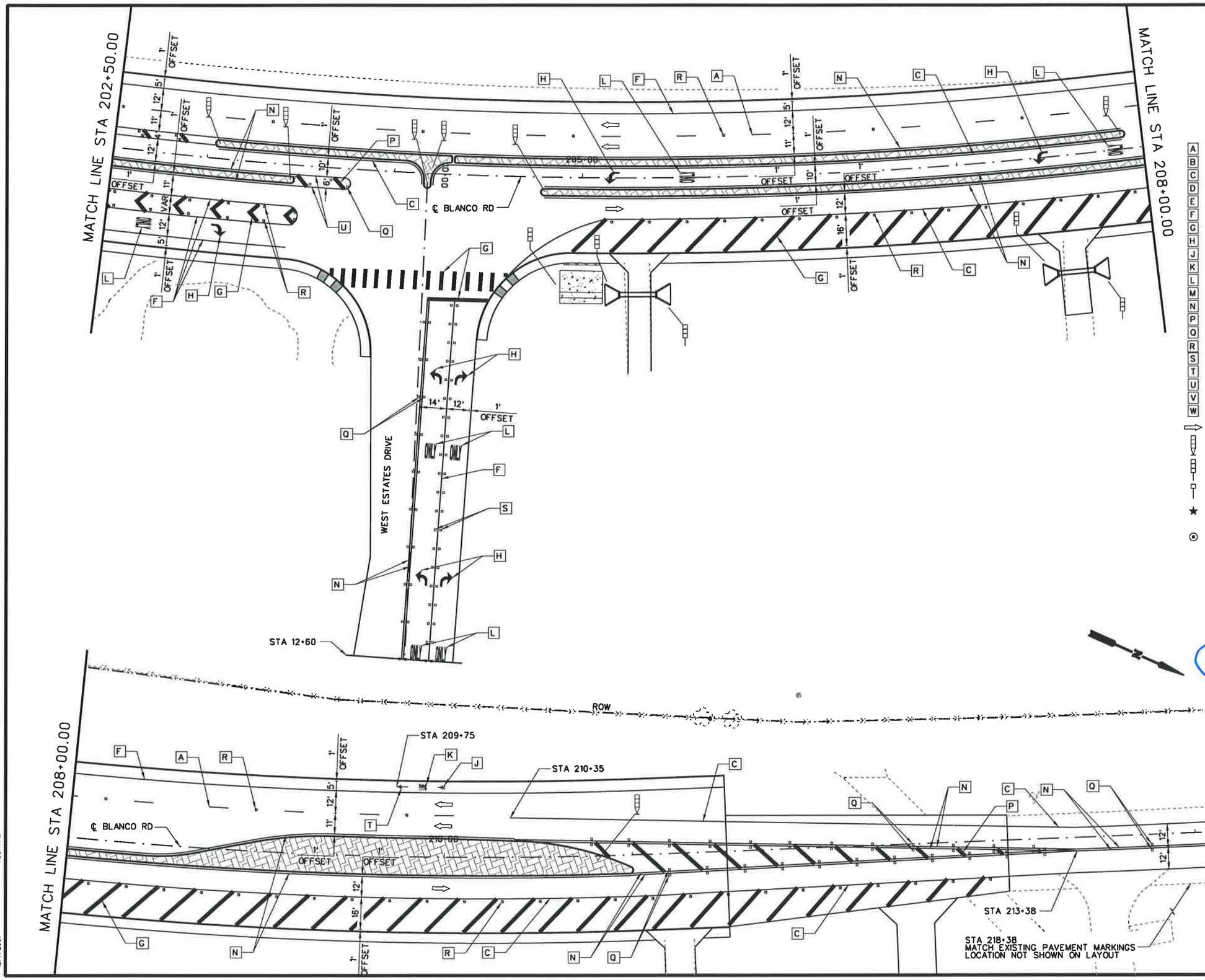

25 12.5 0 25 50
HORIZ. SCALE FEET

LEGEND

A	REFL PAV MRK TY I (W)(4")(BRK)(100 MIL)	★
B	REFL PAV MRK TY I (W)(4")(DOT)(100 MIL)	★
C	REFL PAV MRK TY I (W)(4")(SLD)(100 MIL)	★
D	REFL PAV MRK TY I (W)(8")(DOT)(100 MIL)	★
E	REFL PAV MRK TY I (W)(8")(LNDP)(100 MIL)	★
F	REFL PAV MRK TY I (W)(8")(SLD)(100 MIL)	★
G	REFL PAV MRK TY I (W)(24")(SLD)(100 MIL)	★
H	REFL PAV MRK TY I (W)(ARROW)(100 MIL)	⊙
J	REFL PAV MRK TY I (W)(BIKE SYML)(100MIL)	⊙
K	REFL PAV MRK TY I (W)(BIKE WORD)(100MIL)	⊙
L	REFL PAV MRK TY I (W)(WORD)(100 MIL)	⊙
M	REFL PAV MRK TY I (Y)(4")(BRK)(100 MIL)	★
N	REFL PAV MRK TY I (Y)(4")(SLD)(100 MIL)	★
P	REFL PAV MRK TY I (Y)(24")(SLD)(100 MIL)	★
Q	REFL PAV MRKR TY II-A-A	
R	REFL PAV MRKR TY II-C-R	
S	REFL PAV MRKR TY I-C	
T	REFL PAV MRK TY I (W)(BIKE ARROW)(100MIL)	⊙
U	REFL PAV MRK TY I (Y)(8")(SLD)(100 MIL)	★
V	REFL PAV MRK TY I (W)(DBL ARROW)(100 MIL)	⊙
W	REFL PAV MRK TY I (Y)(MED NOSE)(100 MIL)	⊙

⇨ DIRECTION OF TRAFFIC FLOW

OBJECT MARKER ASSEMBLY (OM-2Z)(FLX)SLF

OBJECT MARKER ASSEMBLY (OM-2X)(WC)GND

DELINEATOR ASSEMBLY (D-SW)(SZ-1)(FLX)GF3

★ TYPE II MARKINGS SHALL BE USED FOR PAVEMENT SEALER. REFER TO SPECIAL SPECIFICATION 6110.

⊙ TYPE II MARKINGS SHALL BE USED FOR PAVEMENT SEALER. REFER TO STANDARD SPECIFICATION 666.

STATE OF TEXAS
JOSE A. SANCHEZ
87890
LICENSED
PROFESSIONAL ENGINEER

2007.12.07

JOSE A. SANCHEZ DATE

NO.	REVISION	BY	DATE

CP&Y Chiang, Patel & Yerby, Inc.

TEDSI INFRASTRUCTURE GROUP
Consulting Engineers
10999 IH 10 West • Suite 320
San Antonio, Texas 78230
(210) 858-0610

BEXAR COUNTY
PUBLIC WORKS DIVISION

F.M. 2696 (BLANCO ROAD)

PAVEMENT MARKINGS LAYOUT

STA 202+50.00 TO STA 213+50.00

SHEET 19 OF 19

Designed: RC	STATE	BEXAR COUNTY FILE NUMBER	PLAN SET NO.
Checked: JAS	TEXAS		743
Drawn: RC	COUNTY		OF
Checked: JAS	BEXAR		842

p:\2007\27958-1-blanco rd south\design\csj\Traffic\Pavement Markings\6102SSRDSL19.DGN
12/7/2007 1:50:11 PM

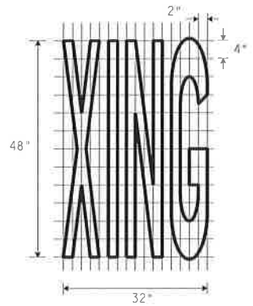

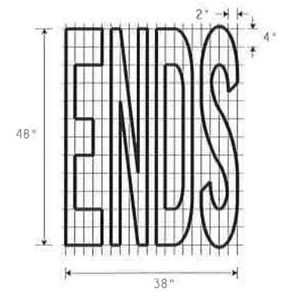

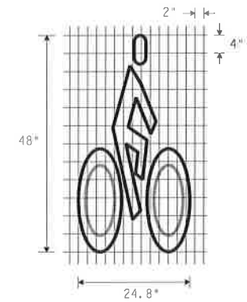

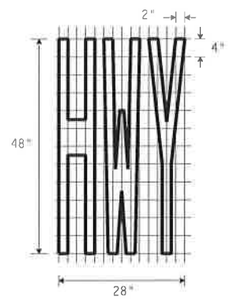

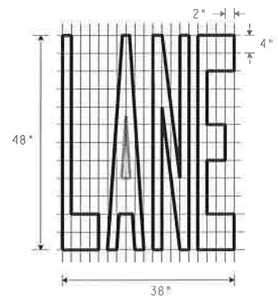

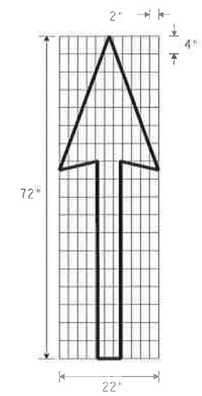

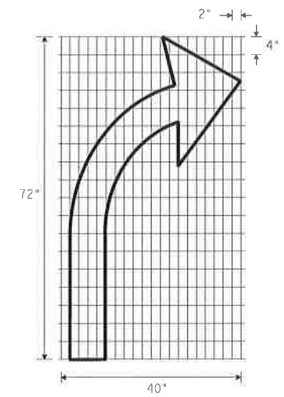

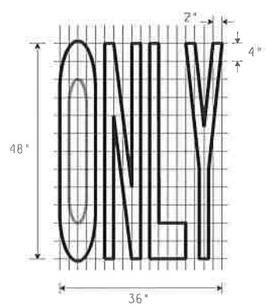

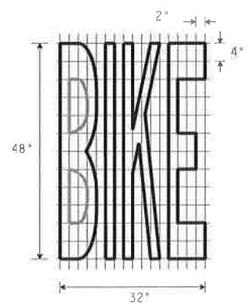

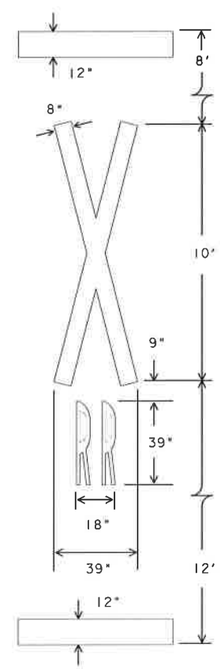

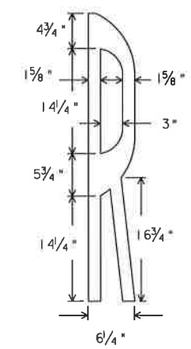

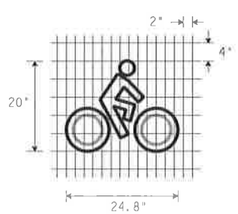

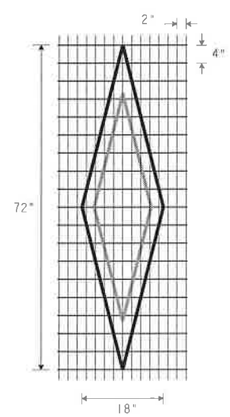

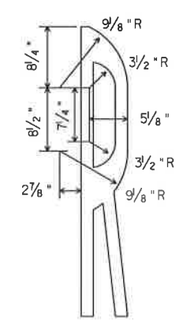

SPECIFICATION REFERENCE TABLE
MATERIALS AND TESTS DIVISION SPECIFICATIONS

TRAFFIC PAINT	D-9-8200
THERMOPLASTIC, HOT APPLIED	D-9-8220
PREFABRICATED PAVEMENT MARKINGS-PERMANENT	D-9-8240
GLASS BEADS	D-9-8290

GENERAL NOTES:

All pavement markings shall be white except when noted otherwise.

Pavement markings shall be of the materials specified and shall be in conformance with Department Material Specifications.

STANDARD PLANS
TEXAS DEPARTMENT OF TRANSPORTATION
Traffic Operations Division

BICYCLE LANE PAVEMENT MARKINGS

BL(PM-1)-97

©TxDOT January 1997

DN: MT	CK: -	DW: DN	CK:	NEG NO.:
REVISIONS	STATE DISTRICT: SAT	FEDERAL REGION: 6	FEDERAL AID PROJECT	SHEET 746
	COUNTY: BEXAR	CONTROL: 2708	SECTION: 01	JOB: 022	HIGHWAY: FM2696

DISCLAIMER
The use of this standard is governed by the "Texas Engineering Practice Act". No warranty of any kind is made by TxDOT for any purpose whatsoever. TxDOT assumes no responsibility for the conversion of this standard to other formats or for incorrect results or damages resulting from its use.

DN: LR
CK: CW
DW: DN
CK: MT

DATE:
ACC: c58hplc/usr/d580504
FILE:

LEVELS 0

DISCLAIMER
The use of this standard is governed by the "Texas Engineering Practice Act". No warranty of any kind is made by TxDOT for any purpose whatsoever. TxDOT assumes no responsibility for the conversion of this standard to other formats or for incorrect results or damages resulting from its use.

TWO LANE TWO-WAY ROADWAY WITH OR WITHOUT SHOULDERS

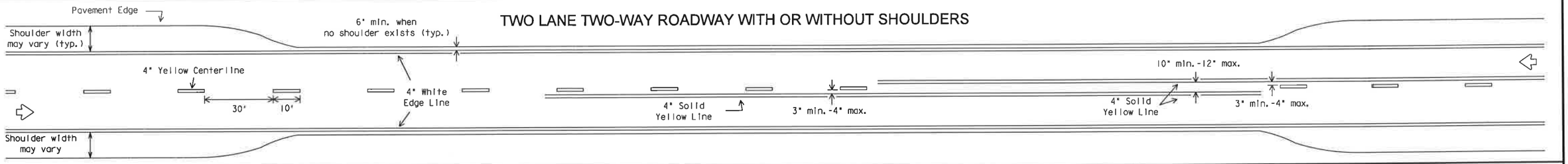

CENTERLINE AND LANE LINES FOUR LANE TWO-WAY ROADWAY WITH OR WITHOUT SHOULDERS

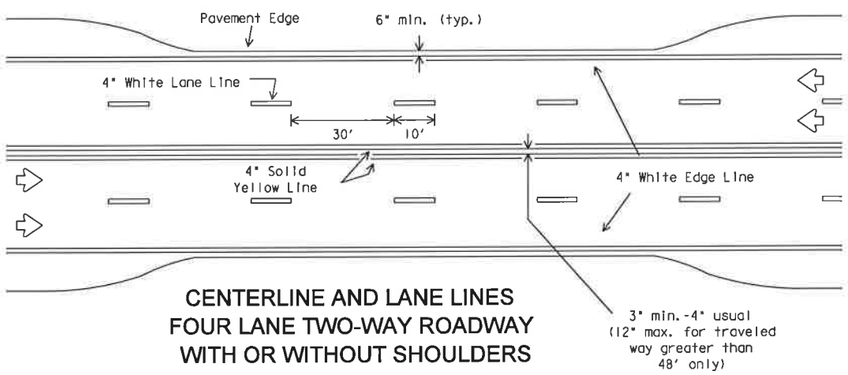

EDGE LINE AND LANE LINES ONE-WAY ROADWAY WITH OR WITHOUT SHOULDERS

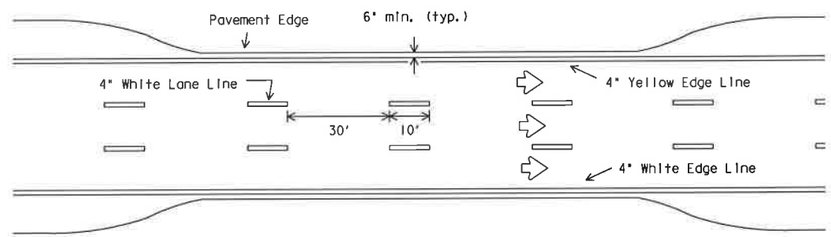

GUIDE FOR PLACEMENT OF STOP LINES, EDGE LINE & CENTERLINE

Based on Traveled Way and Pavement Widths for Undivided Highways

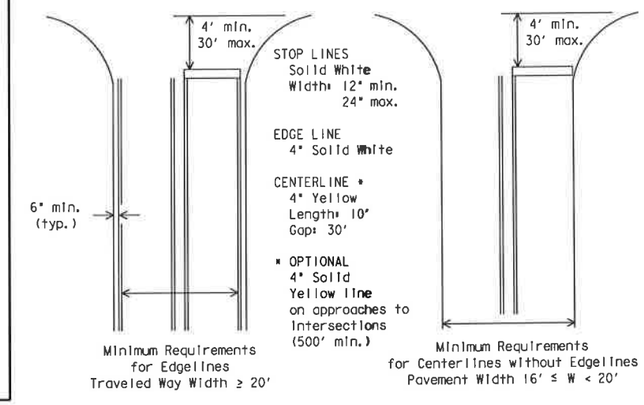

FOUR LANE DIVIDED ROADWAY INTERSECTIONS

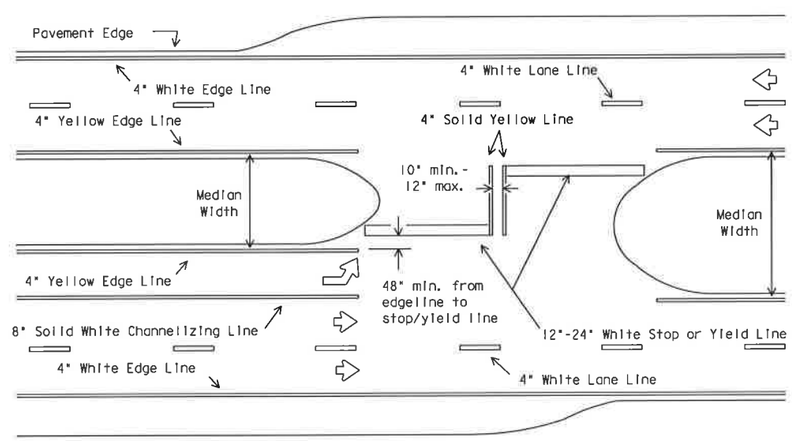

All medians shall be field measured to determine the location of necessary striping. Stop/Yield bars and centerlines shall be placed when the median width is greater than 30 ft. The median width is defined as the area between two roadways of a divided highway measured from edge of traveled way to edge of traveled way. The median excludes turn lanes. The median width might be different between intersections, interchanges and of opposite approaches of the same intersection. The narrow median width will be the controlling width to determine if markings are required.

ROADWAYS WITH REDUCED SHOULDER WIDTHS ACROSS BRIDGE OR CULVERT

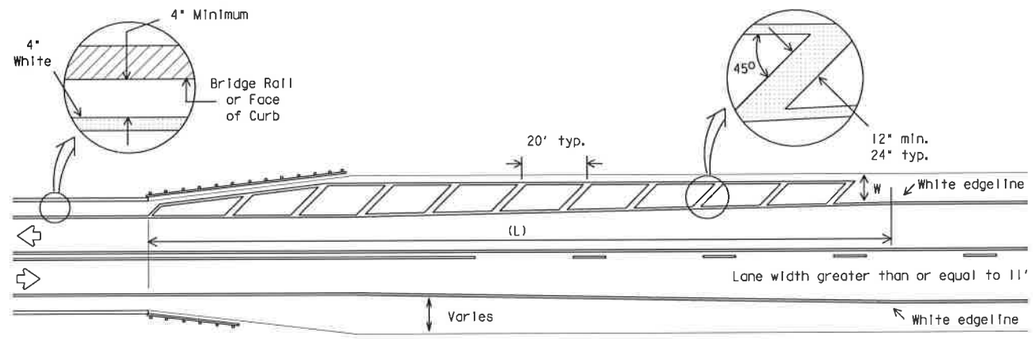

NOTES:

1. No-passing zone on bridge approach is optional but if used, it shall be a minimum 500 feet long.
2. For crosshatching length (L) see Table I.
3. The width of the offset (W) and the required crosshatching width is the full shoulder width in advance of the bridge.
4. The crosshatching should be required if the shoulder width in advance of the bridge is 4 foot or wider and any reduction in shoulder width across the bridge occurs.
5. For guard fence details, refer elsewhere in the plans.

TABLE I - TYPICAL LENGTH (L)

Posted Speed *	Formula
30, 35, 40	$L = \frac{WS^2}{60}$
45, 50, 55, 60, 65, 70	L=WS

* 85th Percentile Speed may be used on roads where traffic speeds normally exceed the posted speed limit. Crosshatching length should be rounded up to nearest 5 foot increment.

L=Length of Crosshatching (FT.) W=Width of Offset (FT.)
S=Posted Speed (MPH)

EXAMPLES:

An 8 foot shoulder in advance of a bridge reduces to 4 feet on a 70 MPH roadway. The length of the cross-hatching should be:

$L = 8 \times 70 = 560$ ft.

A 4 foot shoulder in advance of a bridge reduces to 2 feet on a 40 MPH roadway. The length of the cross-hatching should be:

$L = 4(40)^2 / 60 = 106.67$ ft. rounded to 110 ft.

GENERAL NOTES:

Edgeline striping shall be as shown in the plans or as directed by the Engineer. The edgeline should typically be placed a minimum of 6 inches from the edge of pavement. This distance may vary due to pavement raveling or other conditions. Edgelines are not required in curb and gutter sections of roadways.

The traveled way includes only that portion of the roadway used for vehicular travel and not the parking lanes, sidewalks, berms and shoulders. The traveled ways shall be measured from the inside of edgeline to inside of edgeline of a two lane roadway.

All pavement marking materials shall meet the required Departmental Material Specifications as specified by the plans.

SPECIFICATION REFERENCE TABLE

MATERIAL SPECIFICATIONS	
PAVEMENT MARKERS (REFLECT.)	DMS-4200
EPOXY	DMS-6100
BITUMINOUS ADHESIVE FOR PAVEMENT MARKERS	DMS-6130

YIELD LINES

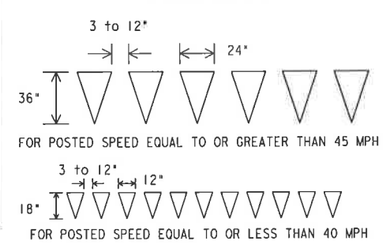

STANDARD PLANS
Texas Department of Transportation
Traffic Operations Division

TYPICAL STANDARD PAVEMENT MARKINGS

PM(I)-03

©TxDOT November 1978	DN: BAS	CK: GRB	DW: FDN	CK: CAL		FILE NO.:
REVISIONS 8-95, 5-00, 8-00, 3-03	STATE DISTRICT: SAT	FEDERAL REGION: 6	FEDERAL AID PROJECT			SHEET 747
COUNTY: BEXAR		CONTROL: 2708	SECTION: 01	JOB: 022, ETC		HIGHWAY: FM2696

REFLECTIVE RAISED PAVEMENT MARKERS FOR VEHICLE POSITIONING GUIDANCE

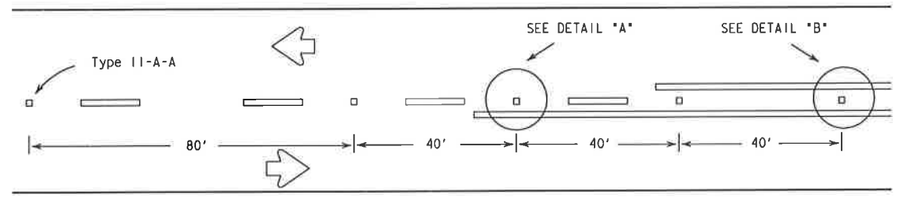

CENTERLINE FOR ALL TWO LANE ROADWAYS

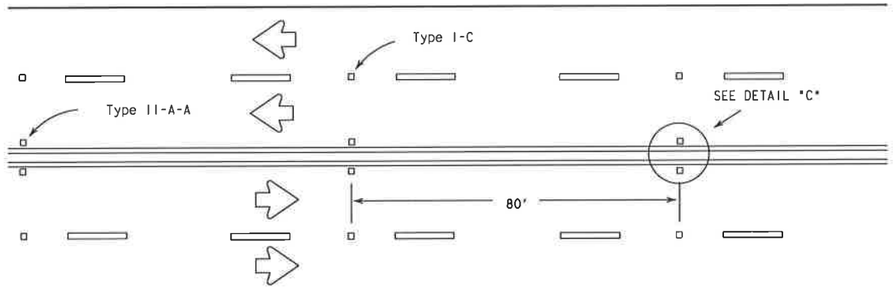

CENTERLINE & LANE LINES FOR FOUR LANE TWO-WAY HIGHWAYS

Raised pavement marker Type I-C, clear face toward normal traffic, shall be placed on 80-foot centers.

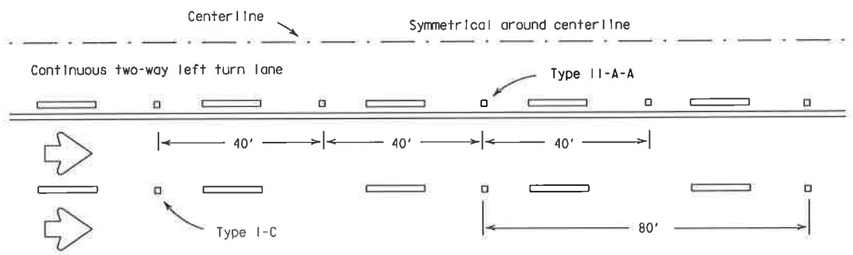

CENTERLINE AND LANE LINES FOR TWO-WAY LEFT TURN LANE

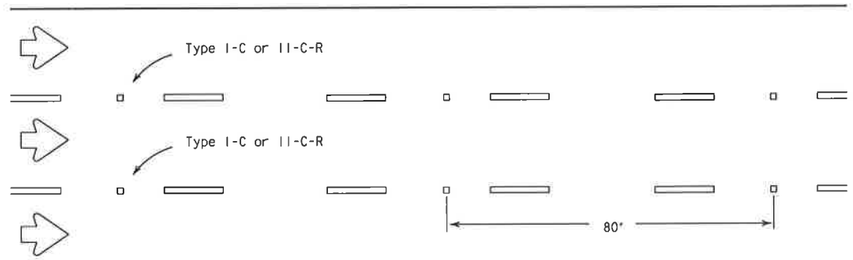

LANE LINES FOR ONE-WAY ROADWAY (NON-FREEWAY FACILITIES)

Raised pavement markers Type II-C-R shall have clear face toward normal traffic and red face toward wrong-way traffic.

As required by the Engineer or shown elsewhere in the plans, Type II-C-R or Type I-C markers may be placed on 40-foot centers for the below listed conditions:

1. horizontal curves,
2. continuously illuminated sections,
3. high volume roadways
4. or roadways where safety concerns exist.

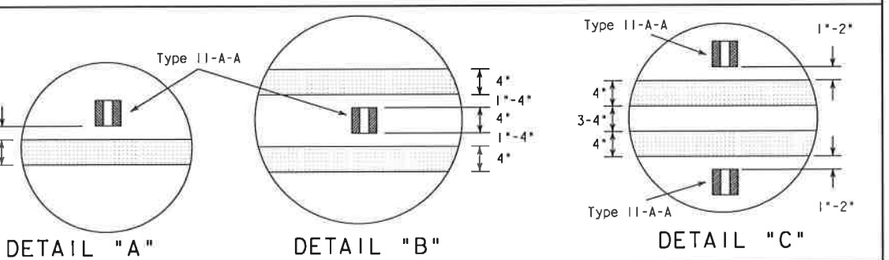

RAISED PAVEMENT MARKERS

(REFLECTORIZED)

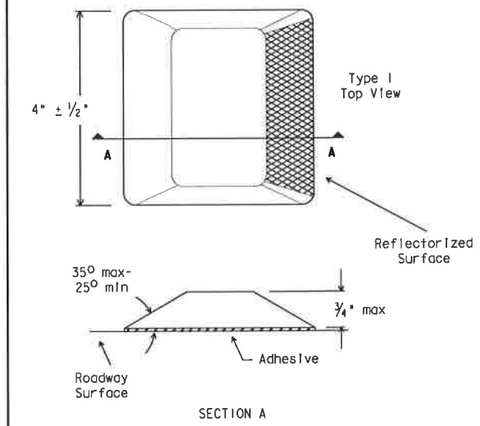

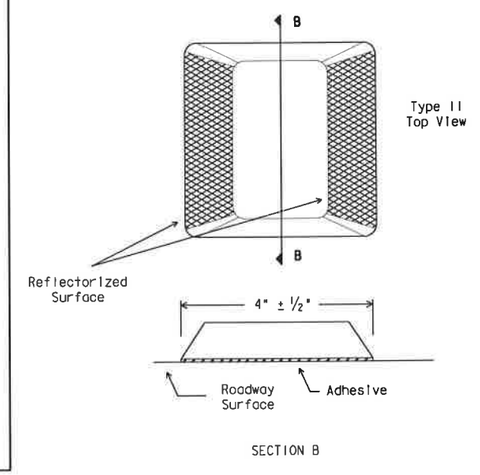

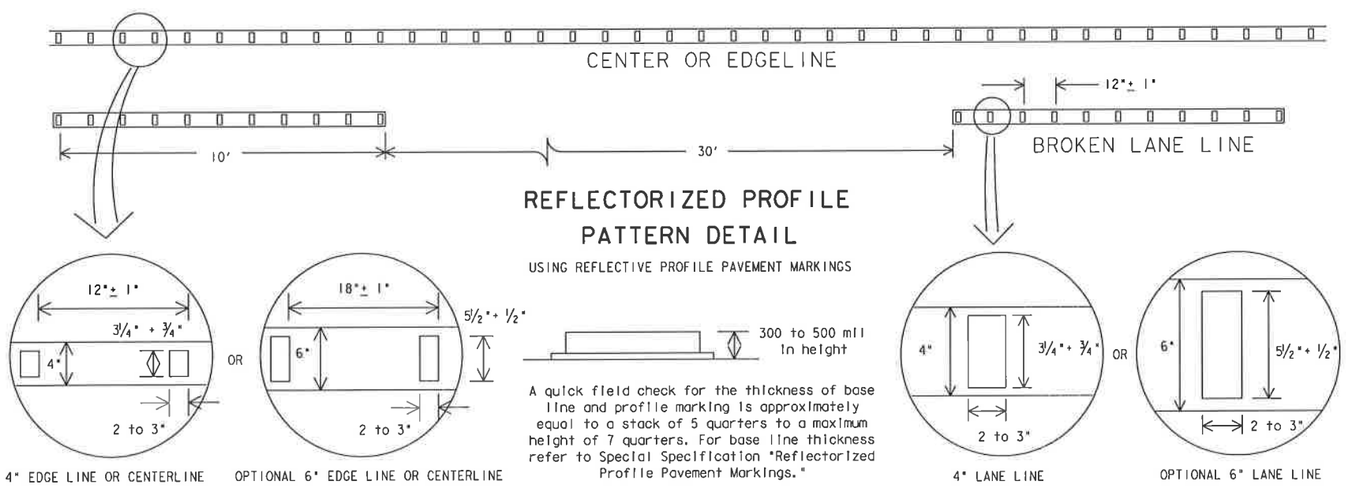

REFLECTORIZED PROFILE PATTERN DETAIL

USING REFLECTIVE PROFILE PAVEMENT MARKINGS

A quick field check for the thickness of base line and profile marking is approximately equal to a stack of 5 quarters to a maximum height of 7 quarters. For base line thickness refer to Special Specification "Reflectorized Profile Pavement Markings."

GENERAL NOTES:

All raised pavement markers placed in broken lines shall be placed in line with and midway between the stripes.

On concrete pavements the raised pavement markers should be placed to one side of the longitudinal joints.

All pavement marking materials shall meet the required Departmental Material Specifications as specified by the plans.

SPECIFICATION REFERENCE TABLE

MATERIAL SPECIFICATIONS	
PAVEMENT MARKERS (REFLECT.)	DMS-4200
EPOXY	DMS-6100
BITUMINOUS ADHESIVE FOR PAVEMENT MARKERS	DMS-6130

STANDARD PLANS
Texas Department of Transportation
Traffic Operations Division

POSITION GUIDANCE USING RAISED MARKERS
REFLECTORIZED PROFILE MARKINGS

PM(2)-00A

©TxDOT April 1977	DN: BAS	CK: GRB	DW: FDN	CK: CAL	
REVISIONS 10-86, 4-92, 5-00, 8-00	STATE DISTRICT: SAT	FEDERAL REGION: 6	FEDERAL AID PROJECT		SHEET 748
COUNTY: BEXAR	CONTROL: 2708	SECTION: 01	JOB: 022, ETC	HIGHWAY: FM2696	

DISCLAIMER
The use of this standard is governed by the "Texas Engineering Practice Act". No warranty of any kind is made by TxDOT for any purpose whatsoever. TxDOT assumes no responsibility for the conversion of this standard to other formats or for incorrect results or damages resulting from its use.

DISPLAYED
ACC:

DISCLAIMER
The use of this standard is governed by the "Texas Engineering Practice Act". No warranty of any kind is made by TxDOT for any purpose whatsoever. TxDOT assumes no responsibility for the conversion of this standard to other formats or for incorrect results or damages resulting from its use.

REFLECTIVE RAISED PAVEMENT MARKERS USED TO SUPPLEMENT STANDARD PAVEMENT MARKINGS

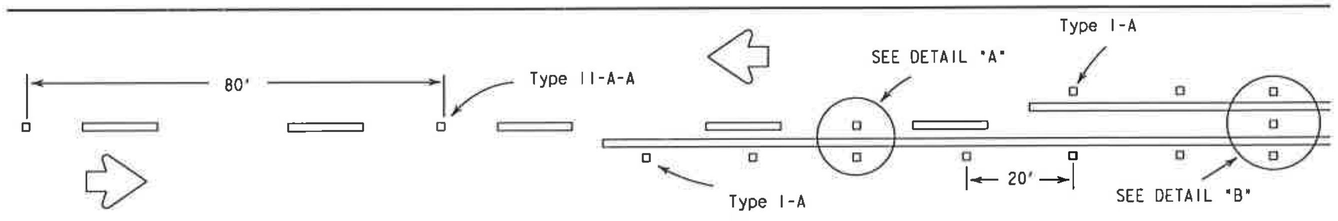

CENTERLINE & NO-PASSING LINES FOR 2 LANE TWO-WAY HWYS 24 FT. OR WIDER

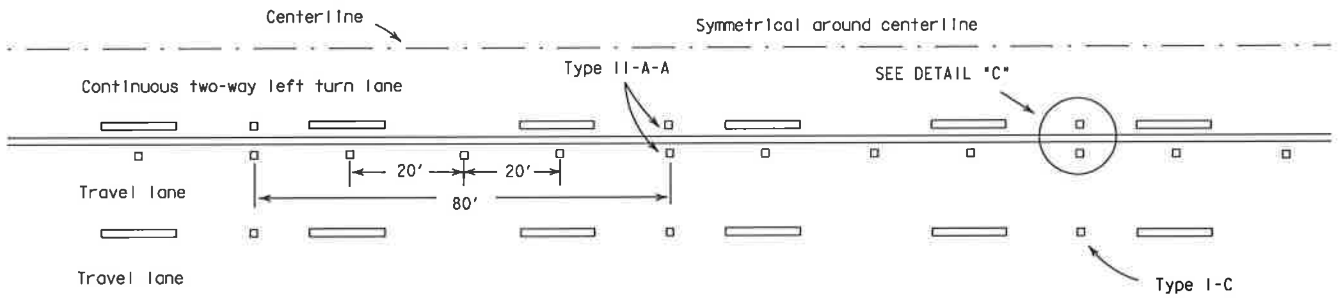

CENTERLINES & LANE LINES FOR TWO-WAY LEFT TURN LANE

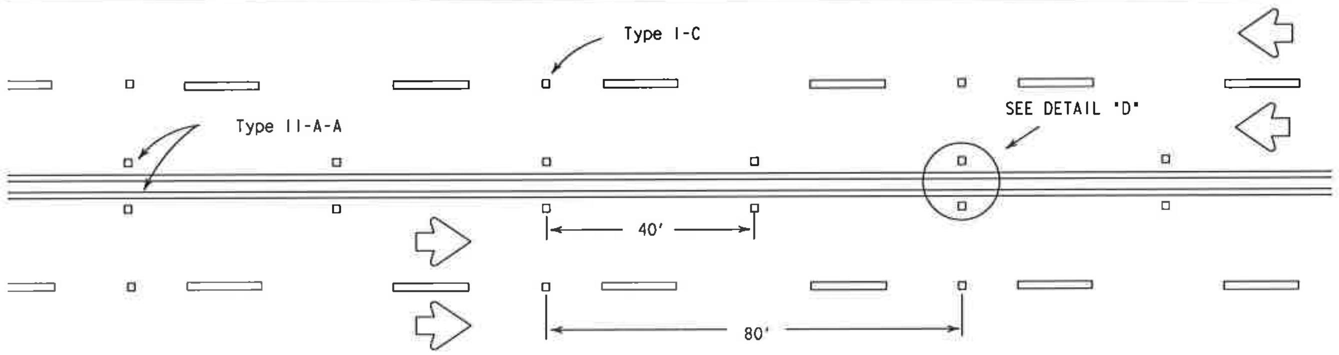

CENTERLINE & LANE LINES FOR 4 LANE TWO-WAY HIGHWAYS

Raised pavement marker Type I-C, clear face toward normal traffic, shall be placed on 80-foot centers.

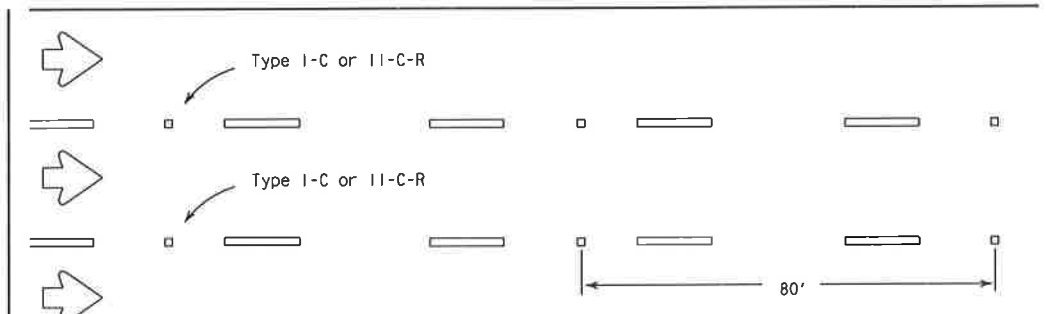

LANE LINES FOR ONE-WAY ROADWAY (NON-FREEWAY)

Raised pavement markers Type II-C-R shall have clear face toward normal traffic and red face toward wrong-way traffic.
As required by the Engineer or shown elsewhere in the plans, Type II-C-R or Type I-C markers may be placed on 40-foot centers for the below listed conditions:

1. horizontal curves,
2. continuously illuminated sections,
3. high volume roadways
4. or roadways where safety concerns exist.

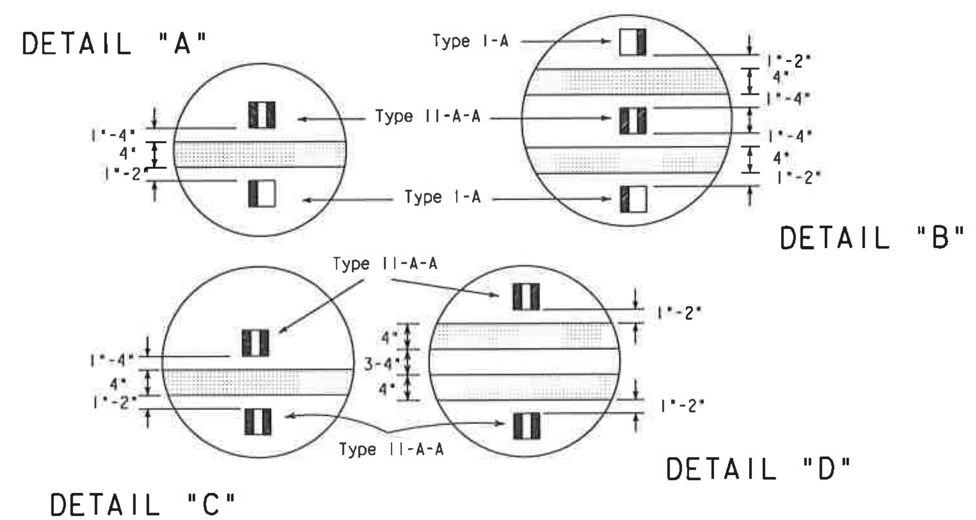

RAISED PAVEMENT MARKERS

(REFLECTORIZED)

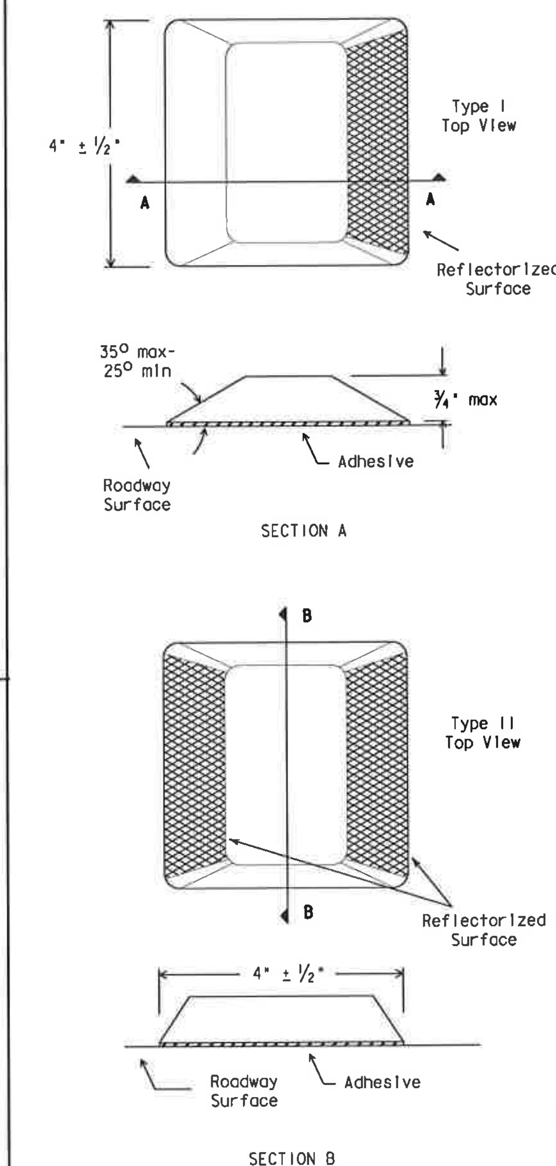

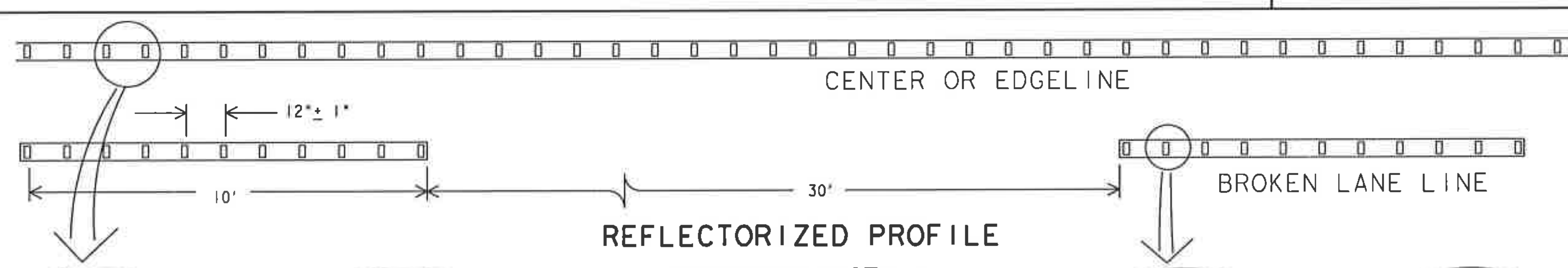

REFLECTORIZED PROFILE PATTERN DETAIL

USING REFLECTIVE PROFILE PAVEMENT MARKINGS

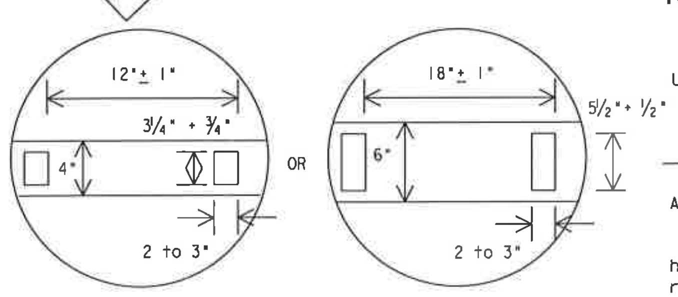

4" EDGE LINE OR CENTERLINE

OPTIONAL 6" EDGE LINE OR CENTERLINE

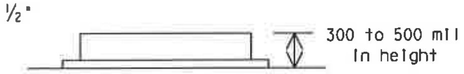

A quick field check for the thickness of base line and profile marking is approximately equal to a stack of 5 quarters to a maximum height of 7 quarters. For base line thickness refer to Special Specification "Reflectorized Profile Pavement Markings."

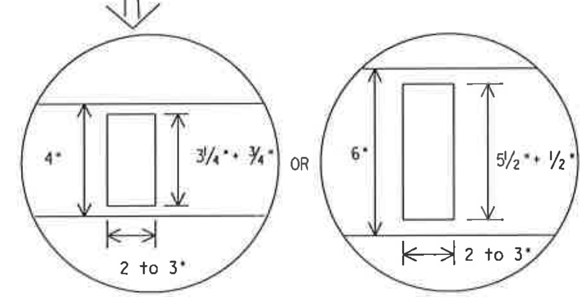

4" LANE LINE

OPTIONAL 6" LANE LINE

GENERAL NOTES:

All raised pavement markers placed in broken lines shall be placed in line with and midway between the stripes.

On concrete pavements the raised pavement markers should be placed to one side of the longitudinal joints.

All pavement marking materials shall meet the required Departmental Material Specifications as specified by the plans.

SPECIFICATION REFERENCE TABLE

MATERIAL SPECIFICATIONS	
PAVEMENT MARKERS (REFLECT.)	DMS-4200
EPOXY	DMS-6100
BITUMINOUS ADHESIVE FOR PAVE. MKS.	DMS-6130

STANDARD PLANS
Texas Department of Transportation
Traffic Operations Division

SUPPLEMENTAL MARKINGS USING RAISED PAVEMENT MARKERS REFLECTORIZED PROFILE MARKINGS

PM(3)-00A

© TxDOT April 1977	DN: BAS	CK: GRB	DW: FDN	CK: CAL	NCG NO.:
REVISIONS 10-86 4-92 5-00 8-00	STATE DISTRICT: SAT	FEDERAL REGION: 6	FEDERAL AID PROJECT		SHEET 749
	COUNTY: BEXAR	CONTROL: 2708	SECTION: 01	JOB: 022,ETC	HIGHWAY: FM2696

1	2	3	4	5	ISPLAYED	ACC:
17 18 19 20 21	22 23 24 25 26 27 28 29 30 31 32	
33 34 35 36 37 38 39 40 41 42 43 44 45 46 47 48		
49 50 51 52 53 54 55 56 57 58 59 60 61 62 63		

DISCLAIMER
The use of this standard is governed by the "Texas Engineering Practice Act". No warranty of any kind is made by TxDOT for any purpose whatsoever. TxDOT assumes no responsibility for the conversion of this standard to other formats or for incorrect results or damages resulting from its use.

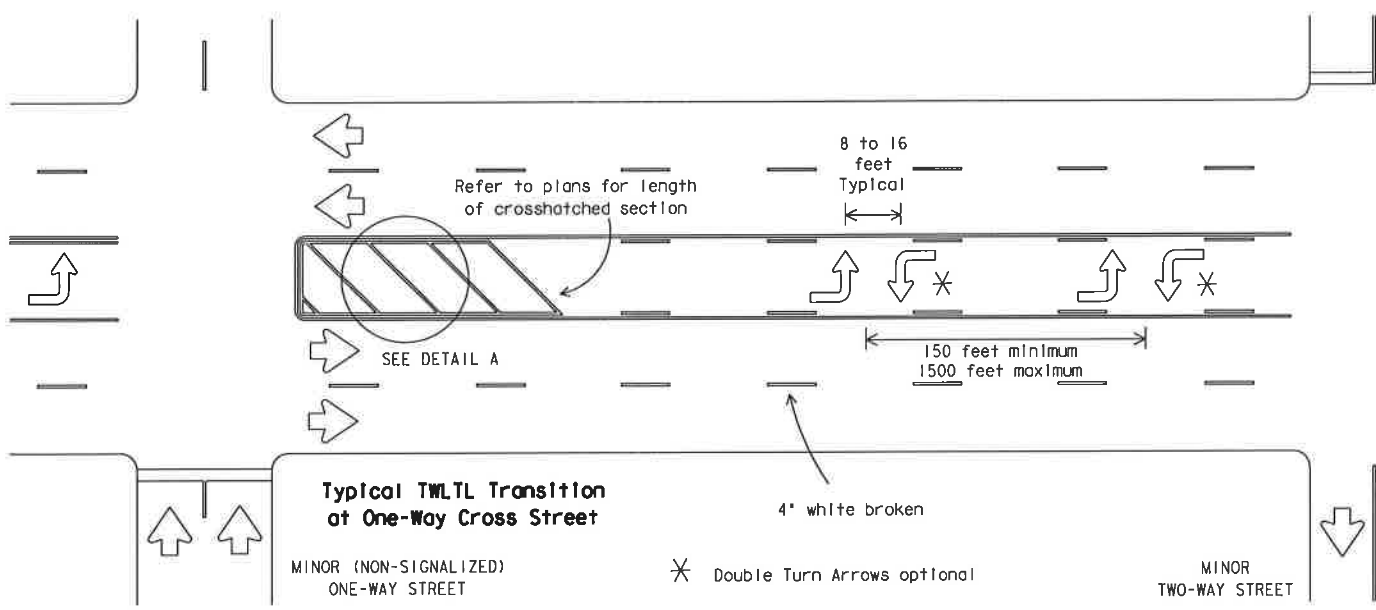

Typical TWLTL Transition at One-Way Cross Street

✱ Double Turn Arrows optional

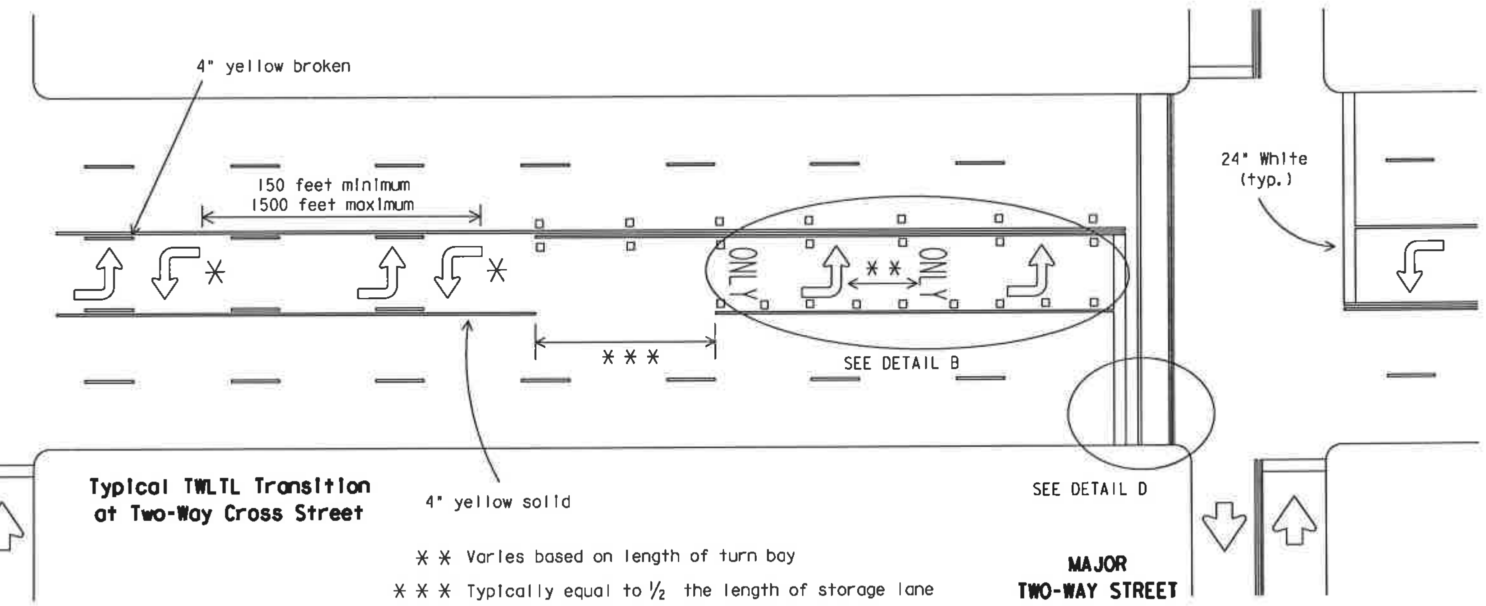

Typical TWLTL Transition at Two-Way Cross Street

✱✱ Varies based on length of turn bay

✱✱✱ Typically equal to 1/2 the length of storage lane

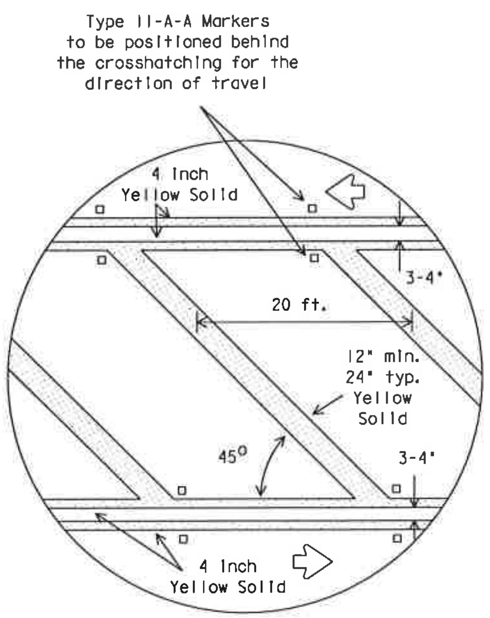

DETAIL A

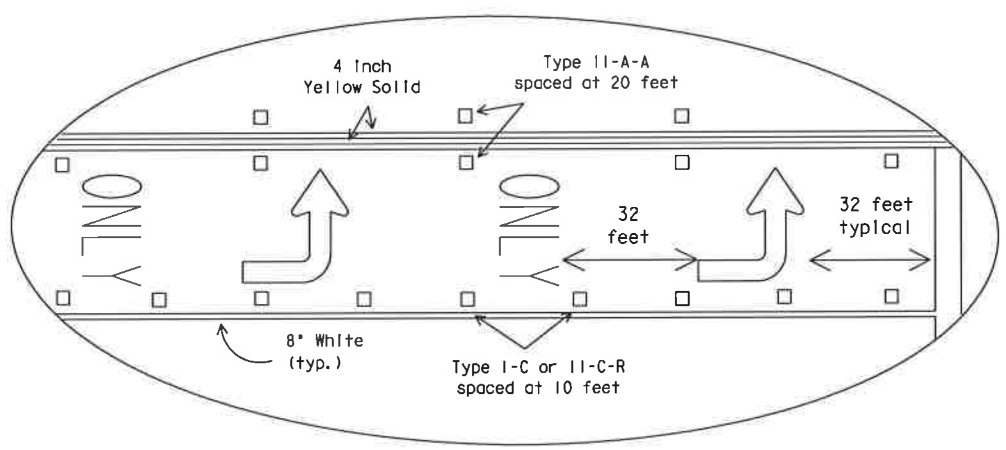

DETAIL B

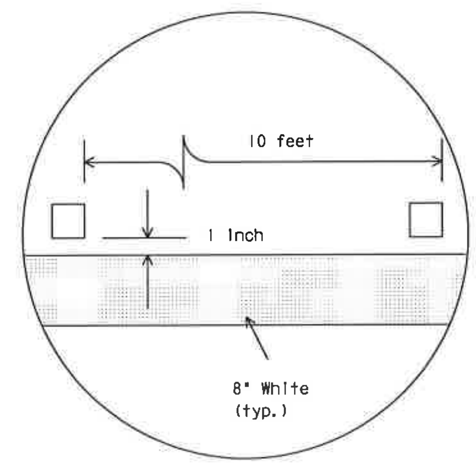

DETAIL C

Raised pavement marker Type I-C with undivided highways, flush medians and two way left turn lanes. Raised pavement marker Type II-C-R with divided highways and raised medians.

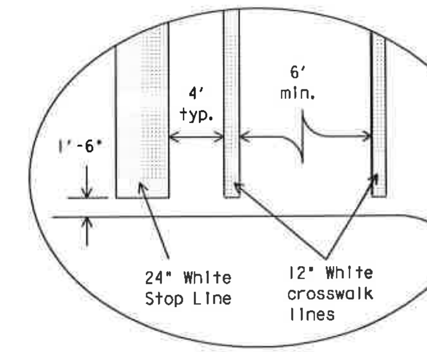

DETAIL D

Final placement of Stop Bar and Crosswalk shall be approved by the Engineer in the field.

GENERAL NOTES

Refer elsewhere in plans for additional RPM placement and details.

Details for words and arrows as shown on other sheets.

All pavement marking materials shall meet the required Departmental Material Specifications as specified by the plans.

For a left turn bay, two sets of words and arrows shall be used if the length of the bay is equal to or greater than 180 feet. The bottom of the first ONLY shall be placed at the beginning of the turn bay lane line as shown above.

Other crosswalk paterns as shown in the "Texas Manual on Uniform Traffic Control Devices" may be used.

SPECIFICATION REFERENCE TABLE

MATERIAL SPECIFICATIONS	
PAVEMENT MARKERS (REFLECT.)	DMS-4200
EPOXY	DMS-6100
BITUMINOUS ADHESIVE FOR PAVE. MKS.	DMS-6130

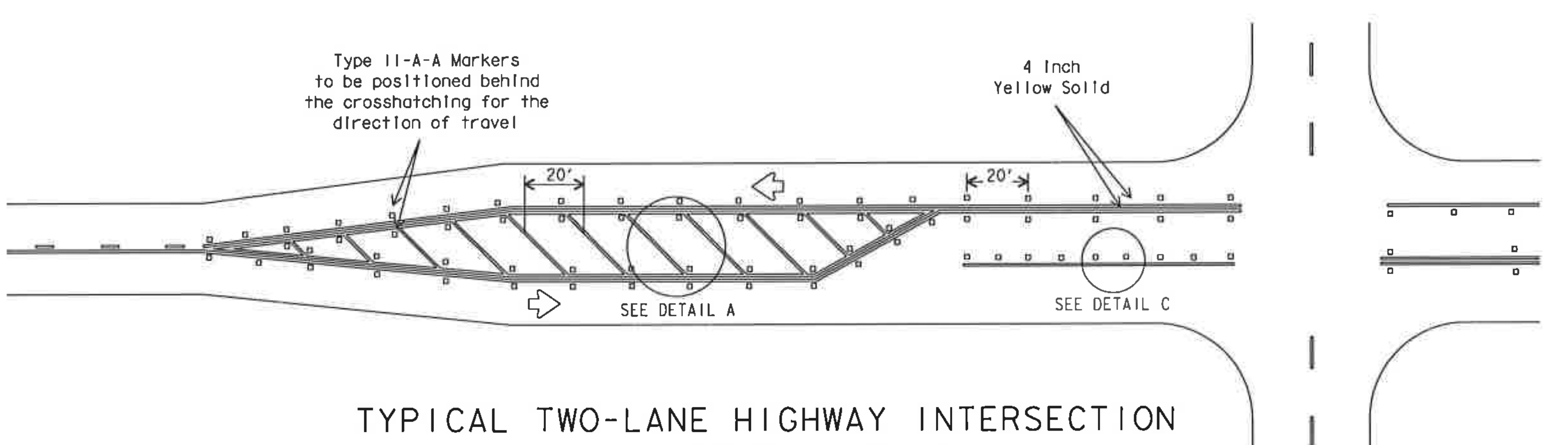

TYPICAL TWO-LANE HIGHWAY INTERSECTION WITH LEFT TURN BAYS

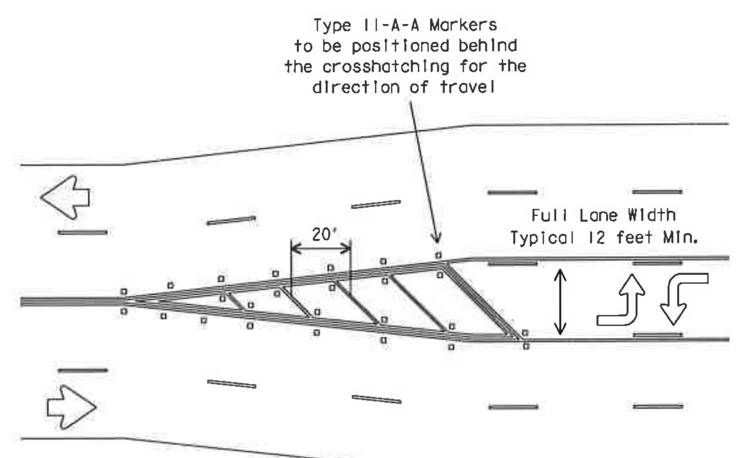

TYPICAL TRANSITION FOR TWLTL AND DIVIDED HIGHWAY

STANDARD PLANS
Texas Department of Transportation
Traffic Operations Division

PAVEMENT MARKINGS FOR TWO-WAY LEFT TURN LANES DIVIDED HIGHWAYS AND RURAL LEFT TURN BAYS

PM(4)-03

©TxDOT April 1998	DN: BAS	CK: GRB	DW: FDN	CK: CAL	NEG NO.:
REVISIONS	STATE DISTRICT	FEDERAL REGION	FEDERAL AID PROJECT		SHEET
5-00 8-00 3-03	SAT	6			750
	COUNTY	CONTROL	SECTION	JOB	HIGHWAY
	BEXAR	2708	01	022,ETC	FM2696

DISCLAIMER
The use of this standard is governed by the "Texas Engineering Practice Act". No warranty of any kind is made by TxDOT for any purpose whatsoever. TxDOT assumes no responsibility for the conversion of this standard to other formats or for incorrect results or damages resulting from its use.

DISPLAYED
1 2 3 4 5
7 8 9 10 11 12 13 14 15 16
19 20 21 22 23 24 25 26 27 28 29 30 31 32
33 34 35 36 37 38 39 40 41 42 43 44 45 46 47 48
49 50 51 52 53 54 55 56 57 58 59 60 61 62 63

ACC:

STANDARD PLANS
Texas Department of Transportation
Traffic Operations Division

STANDARD
PAVEMENT MARKINGS
(WORDS)

PM(5)-01

© TxDOT March 2001	DN:	CK: GRB	DW: FDN	CK: CAL	
REVISIONS	STATE DISTRICT	FEDERAL REGION	FEDERAL AID PROJECT		SHEET
	SAT	6			751
COUNTY		CONTROL	SECTION	JOB	HIGHWAY
BEXAR		2708	01	022, ETC	FM2696

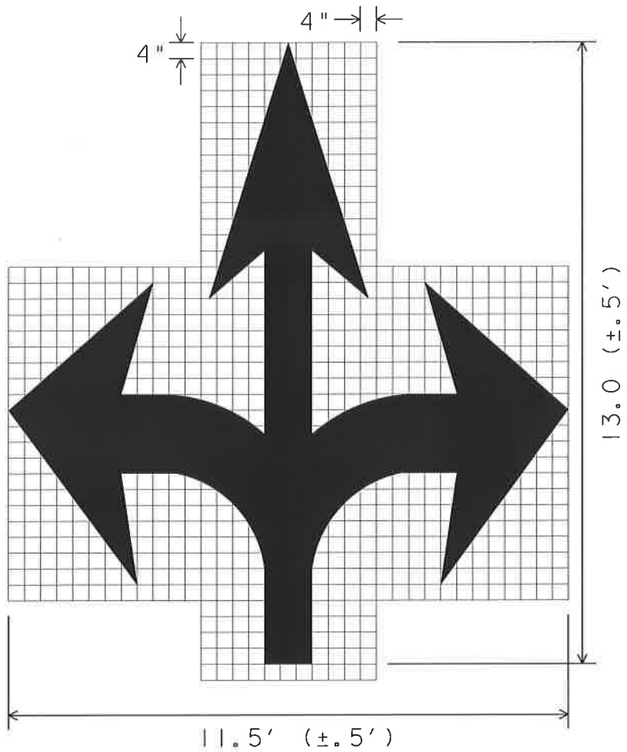

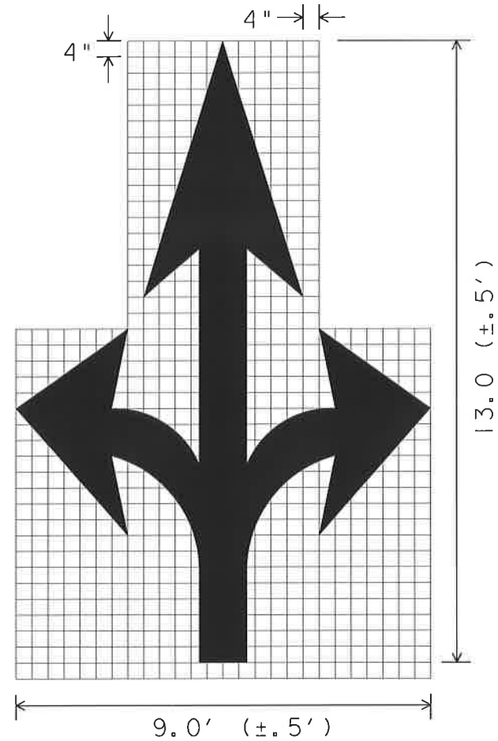

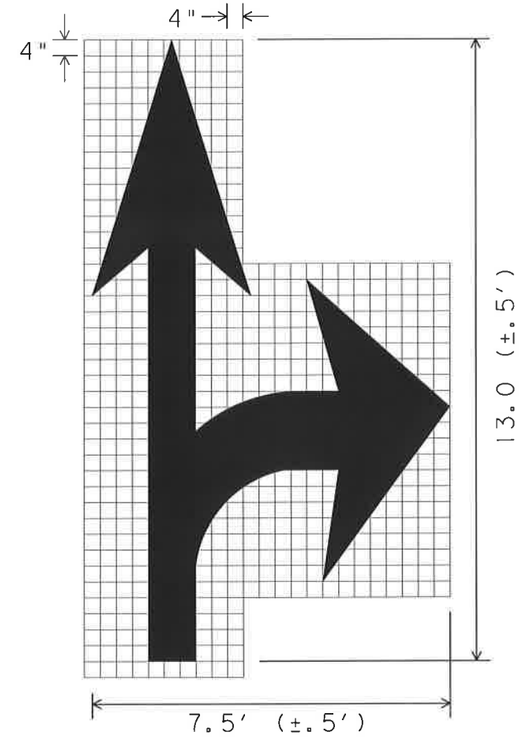

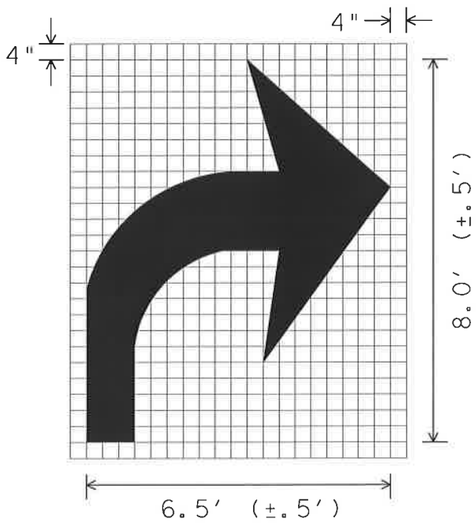

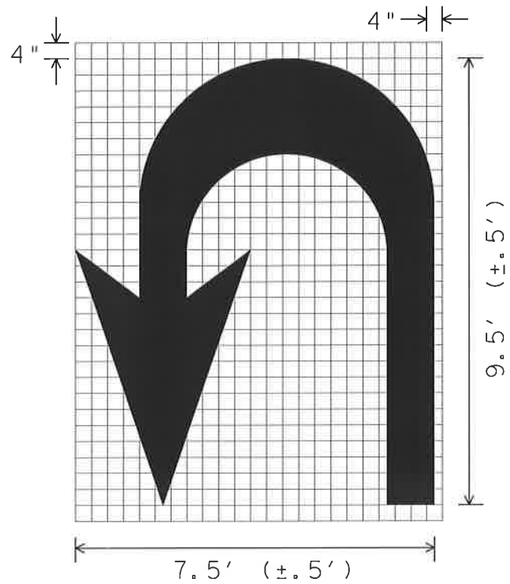

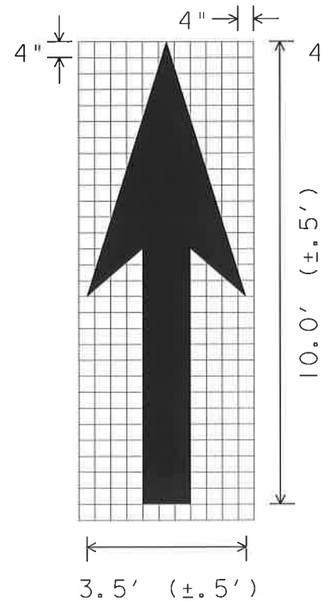

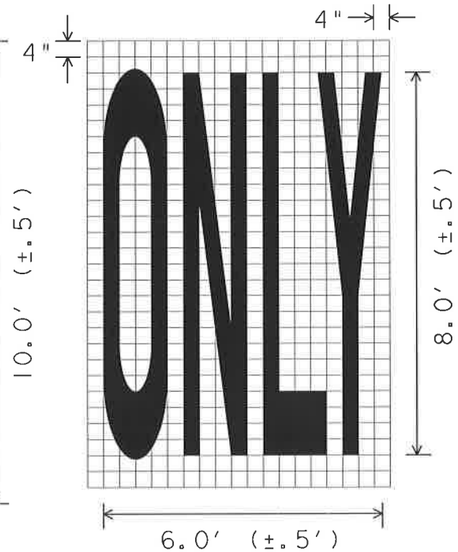

GENERAL NOTES:

1. Minimum 8 foot white markings should be used, unless otherwise noted. If message consists of more than one word, it should be placed with first word nearest the driver.
2. These details are standard size for normal installation; sizes may be reduced approximately one-third for low speed urban conditions; larger sizes may be needed for freeways, above average speed conditions or other critical locations.
3. The longitudinal space between markings should be at least four times the height of the markings, on low speed roads, but should not exceed ten times the height under any condition.
4. Markings considered appropriate for use when warranted include the following:
   A. Regulatory
      STOP
      RIGHT (LEFT) TURN ONLY
      25 MPH
      SYMBOL ARROWS
   B. Warning
      STOP AHEAD
      SIGNAL AHEAD
      SCHOOL
      SCHOOL X-ING
      PED X-ING
      R X R (see RCPM standard)
   C. Guide
      US XXX
      ROUTE XXX
      STATE XXX
      Other words or symbols may be necessary under certain conditions
5. Uncontrolled use of pavement markings can result in driver confusion. Word and symbol markings should be no more than three lines.
6. The word "STOP" shall not be used on the pavement unless accompanied by a Stop line and Stop sign. The word "STOP" shall not be placed on the pavement in advance to a stop line, unless every vehicle is required to stop at all times.
7. Pavement markings should generally be no more than one lane in width, with School messages being the exception. For details of School and School crossing pavement markings, refer to Part VII of the "Texas Manual on Uniform Traffic Control Devices".
8. Spacing between letters should be approximately 4 inches. The width of letters may vary depending on the width of the travel lanes.
9. Lane-Use arrow markings may be used to convey either guidance or mandatory messages. Arrows used to convey a mandatory movement must be accompanied by standard signs and the pavement marking word "ONLY".
10. Pavement markings are to be located as specified elsewhere in the plans.

SPACING BETWEEN LINES OF PAVEMENT MARKINGS	
MPH	SPACING
≤ 45	MINIMUM 4 TIMES THE LETTER HEIGHT
> 45	MINIMUM - 4 TIMES THE LETTER HEIGHT MAXIMUM - 10 TIMES THE LETTER HEIGHT

DISCLAIMER
The use of this standard is governed by the "Texas Engineering Practice Act". No warranty of any kind is made by TxDOT for any purpose whatsoever. TxDOT assumes no responsibility for the conversion of this standard to other formats or for incorrect results or damages resulting from its use.

DISPLAYED
ACC:

STANDARD PLANS
Texas Department of Transportation
Traffic Operations Division

STANDARD PAVEMENT MARKINGS (ARROWS)

PM(6)-01

©TxDOT March 2001

DN:	CK: GRB	DW: FDN	CK: CAL

REVISIONS

STATE DISTRICT	FEDERAL REGION	FEDERAL AID PROJECT			SHEET
SAT	6				752
COUNTY		CONTROL	SECTION	JOB	HIGHWAY
BEXAR		2708	01	022, ETC	FM2696

DISCLAIMER
The use of this standard is governed by the "Texas Engineering Practice Act". No warranty of any kind is made by TxDOT for any purpose whatsoever. TxDOT assumes no responsibility for the conversion of this standard to other formats or for incorrect results or damages resulting from its use.

No Parking Along Bicycle Lane

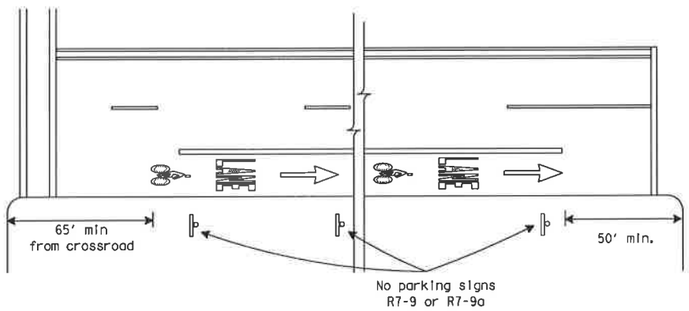

Parking Along Bicycle Lane

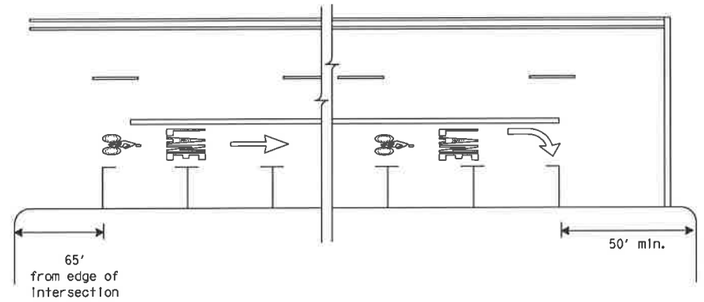

Roadways with Few Intersections

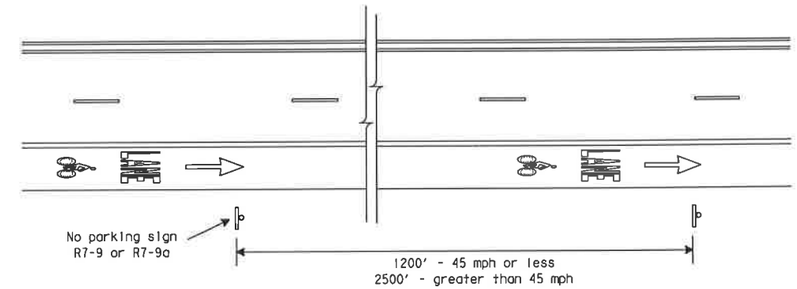

Adjacent to Travel Lane

Preferred

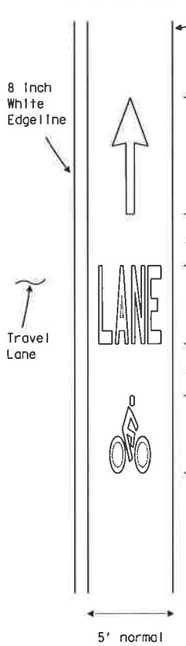

Alternate

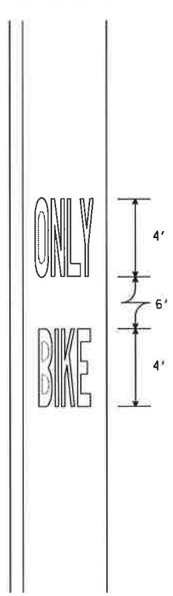

Bicycle Lane Path

(Separate roadway with no motorized traffic)

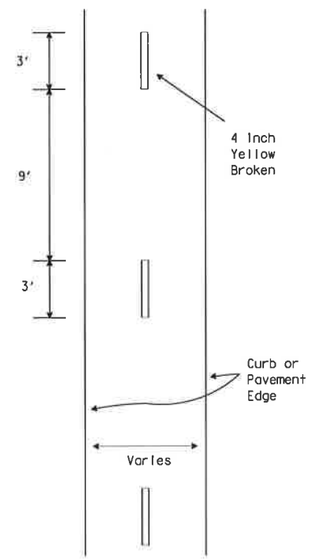

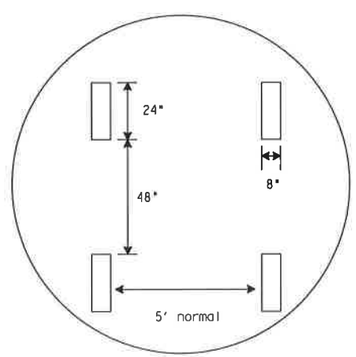

Detail "A"

Railroad Crossing Approach

(with designated bicycle lane adjacent to travel lane)

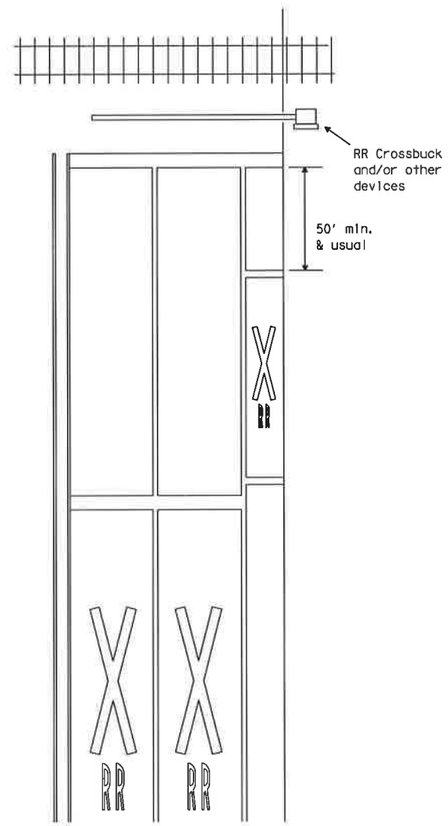

(See RCPM for travel lane details)

Right Turn Lane at Intersection

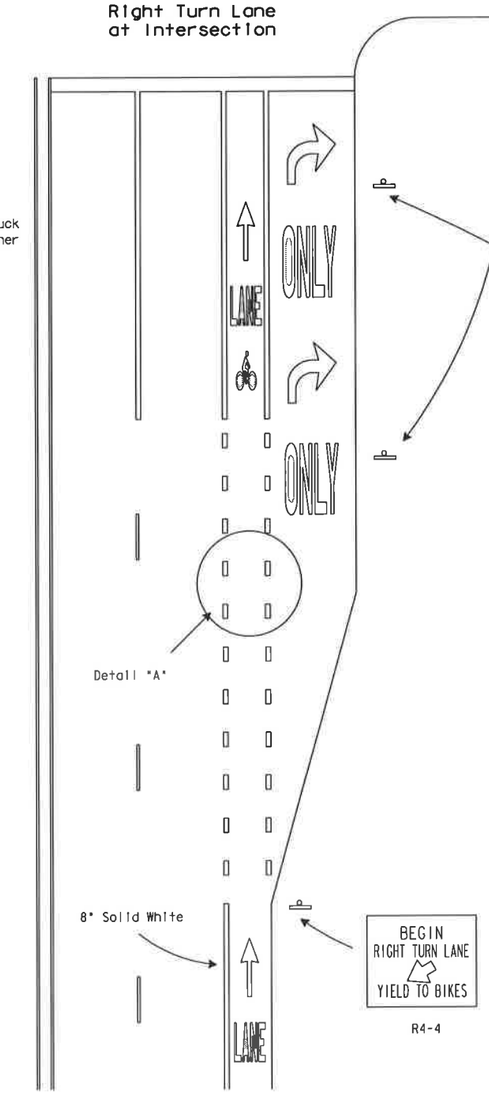

RIGHT LANE
MUST
TURN RIGHT
R3-7R

SPECIFICATION REFERENCE TABLE
MATERIALS AND TESTS DIVISION SPECIFICATIONS

TRAFFIC PAINT	D-9-8200
THERMOPLASTIC, HOT APPLIED	D-9-8220
PREFABRICATED PAVEMENT MARKINGS-PERMANENT	D-9-8240
GLASS BEADS	D-9-8290

GENERAL NOTES:

All pavement markings shall be white except when noted otherwise.

Pavement markings shall be of the materials specified and shall be in conformance with Department Material Specifications.

Exact sign placement and details are shown elsewhere in the plans.

Additiona References: TMUTCD
Guide for the Development of Bicycles Facilities, AASHTO, 1991.

STANDARD PLANS
TEXAS DEPARTMENT OF TRANSPORTATION
Traffic Operations Division

BICYCLE LANE PAVEMENT MARKINGS SAN ANTONIO DISTRICT STANDARD

SAT-BL(PM-2)-97

© TxDOT January 1997

DN: MT	CK: -	DW: DN	CK: -	REG NO.
REVISIONS 11-03 SAN ANTONIO 10-04	STATE DISTRICT: SAT	FEDERAL REGION: 6	FEDERAL AID PROJECT	SHEET 753
COUNTY: BEXAR	CONTROL: 2708	SECTION: 01	JOB: 022	HIGHWAY: FM2696

DN: LR
CK: CW
DW: DN
CK: MT

DATE:
ACC: d58hpl c/usr/d580504
FILE:

LEVELS 0

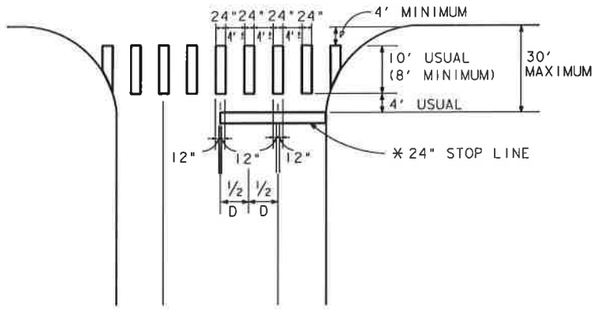

TWO LANES WITH SHOULDERS

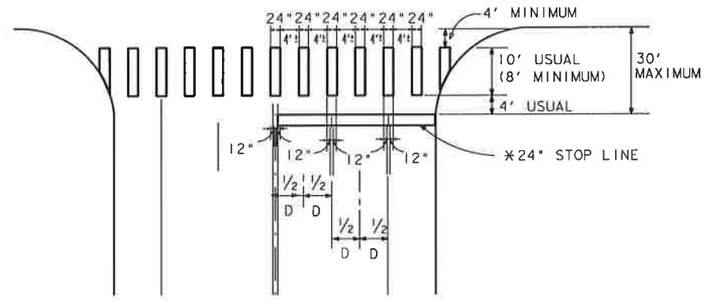

FOUR LANES WITH SHOULDERS

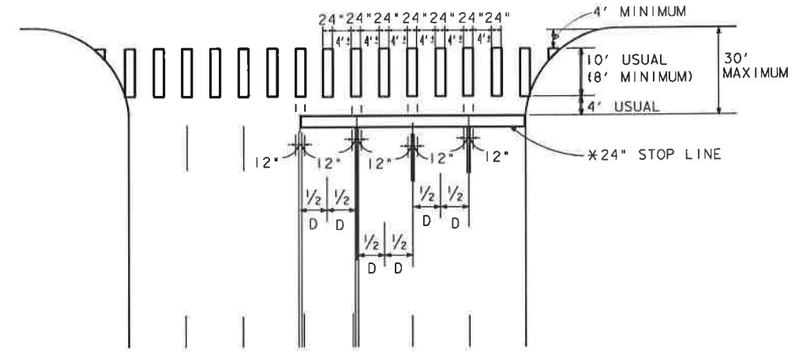

MULTI - LANES

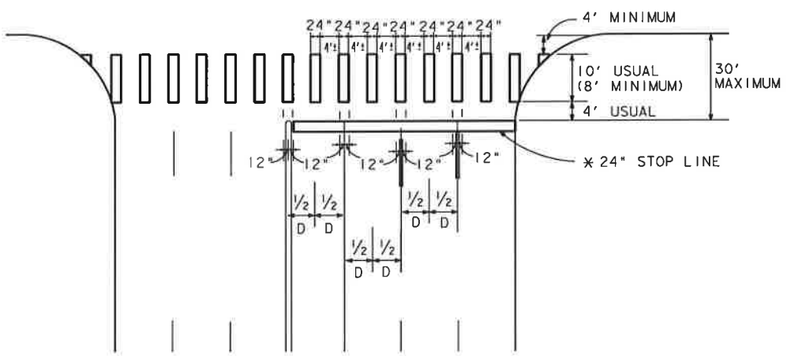

MULTI - LANE WITH MEDIAN

NOTES:

1. ALL LONGITUDINAL LINES FORMING CROSSWALK AND STOP LINES SHALL BE WHITE
*2. STOP LINES AS REQUIRED ON DETAILED PAVEMENT MARKING PLANS.
3. "D" IS EQUAL TO ONE HALF THE DISTANCE.

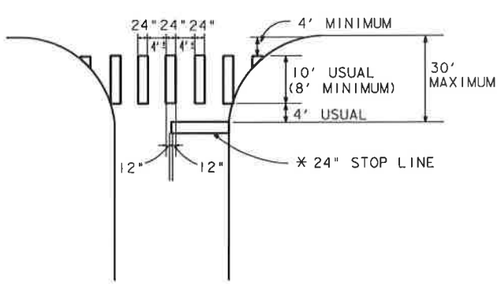

TWO LANES

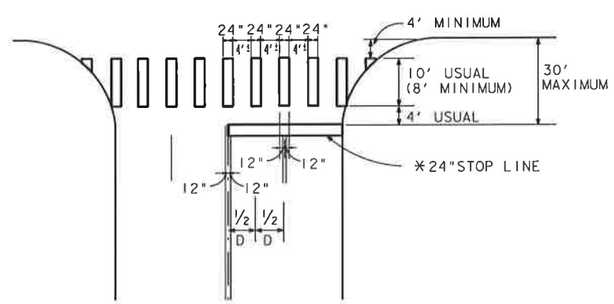

FOUR LANES

COMMON POINT OF OUTSIDE EDGES OF CROSSWALKS AT EDGE OF PAVEMENT OR FACE OF CURB WHERE NO RIGHT TURN ISLAND EXIST.

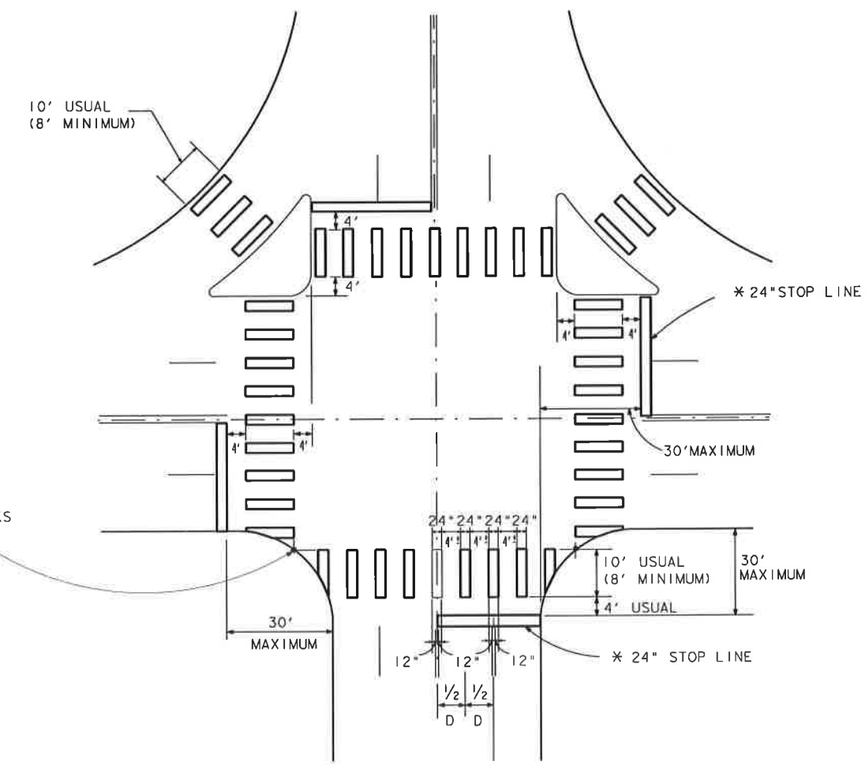

INTERSECTION WITH RIGHT - TURN ISLANDS

TYPICAL CROSSWALK DETAILS

SAN ANTONIO DISTRICT STANDARD

DEC 30, 1999

© 1999 Texas Department of Transportation

FED. RD. DIV. NO.	FEDERAL AID PROJECT NO.		SHEET NO.
6			754
STATE	STATE DIST. NO.	COUNTY	
TEXAS	SAT.	BEXAR	
CONT.	SECT.	JOB	HIGHWAY NO.
2708	01	022, ETC	FM2696

For a left turn bay, two sets of words and arrows shall be used if the length of the bay is equal to or greater than 180 feet. The bottom of the first "ONLY" shall be placed at the beginning of the turn bay lane line as shown.

TWO WAY CENTER LEFT TURN LANE

SEE MLTBD SHEET 5 OF 5
FOR MEDIAN LEFT TURN BAY DETAILS

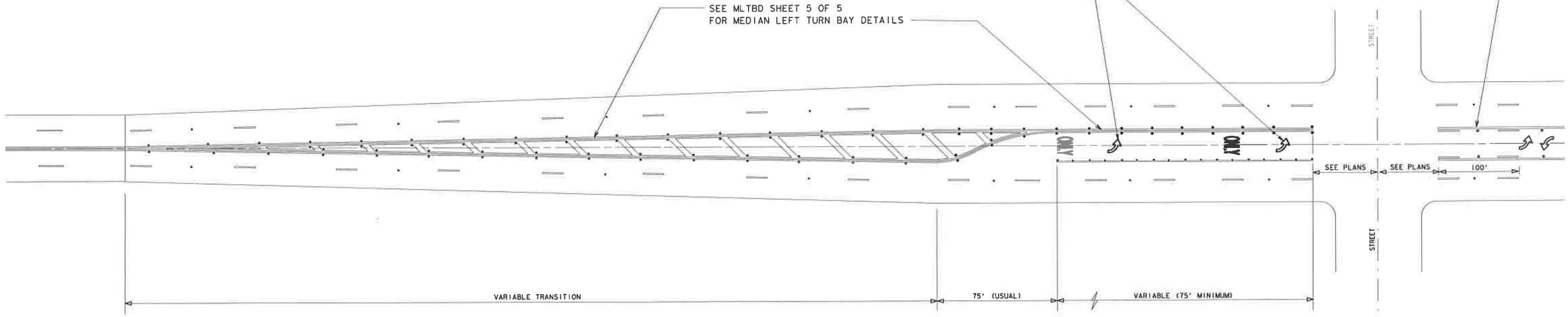

TYPICAL MEDIAN LEFT TURN BAY

SIGNALIZED AND NON-SIGNALIZED CROSS STREETS
AT BEGINNING AND END OF TWO WAY CENTER LEFT TURN LANE

PROPOSED SOLID YELLOW MEDIAN NOSE
WITH TYPE II A-A REFL. MRKRS AT 2'o.c.
(ALONG RADII)

TWO WAY CENTER LEFT TURN LANE

SEE MLTBD SHEET 5 OF 5
FOR MEDIAN LEFT TURN BAY DETAILS

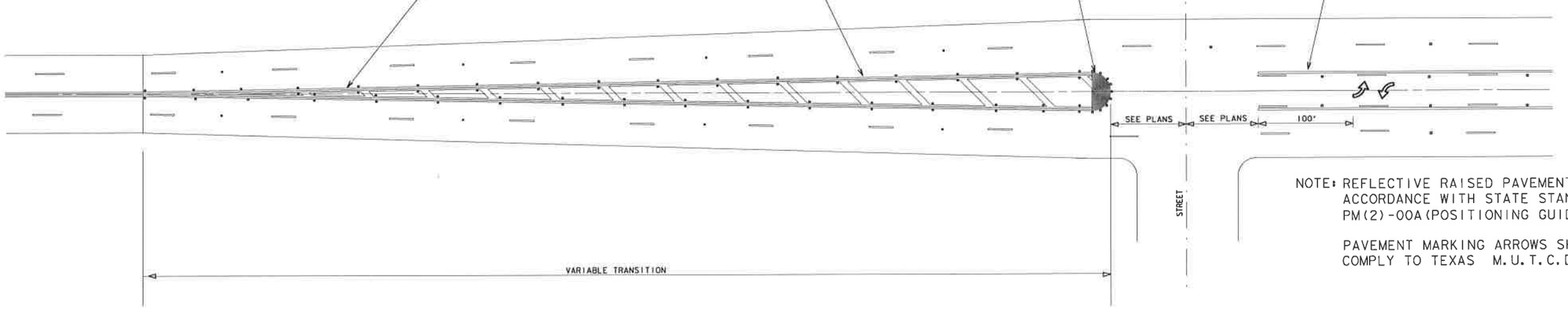

NOTE: REFLECTIVE RAISED PAVEMENT MARKERS SHOULD BE IN ACCORDANCE WITH STATE STANDARDS PM(2)-00A(POSITIONING GUIDANCE).

PAVEMENT MARKING ARROWS SHALL COMPLY TO TEXAS M.U.T.C.D.

TWO WAY LEFT TURN LANE DETAILS
SAN ANTONIO DISTRICT STANDARD

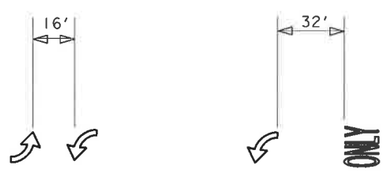

LEGEND
TYPICAL DETAIL
(PLACE LEGENDS IN ACCORDANCE TO STATE STANDARD PM(4)-03)

TYPICAL TRANSITION

AT BEGINNING AND END OF TWO WAY CENTER LEFT TURN LANE

For a left turn bay, two sets of words and arrows shall be used if the length of the bay is equal to or greater than 180 feet. The bottom of the first ONLY shall be placed at the beginning of the turn bay lane line as shown above.

REVISED: APRIL 14, 2003
AUGUST 7, 2002

SHEET 1 OF 5

© 2002 © Texas Department of Transportation

FED. RD. DIV. NO.	FEDERAL AID PROJECT NO.		SHEET NO.
6			755
STATE	STATE DIST. NO.	COUNTY	
TEXAS		BEXAR	
CONT.	SECT.	JOB	HIGHWAY NO.
2708	01	022, ETC	FM2696

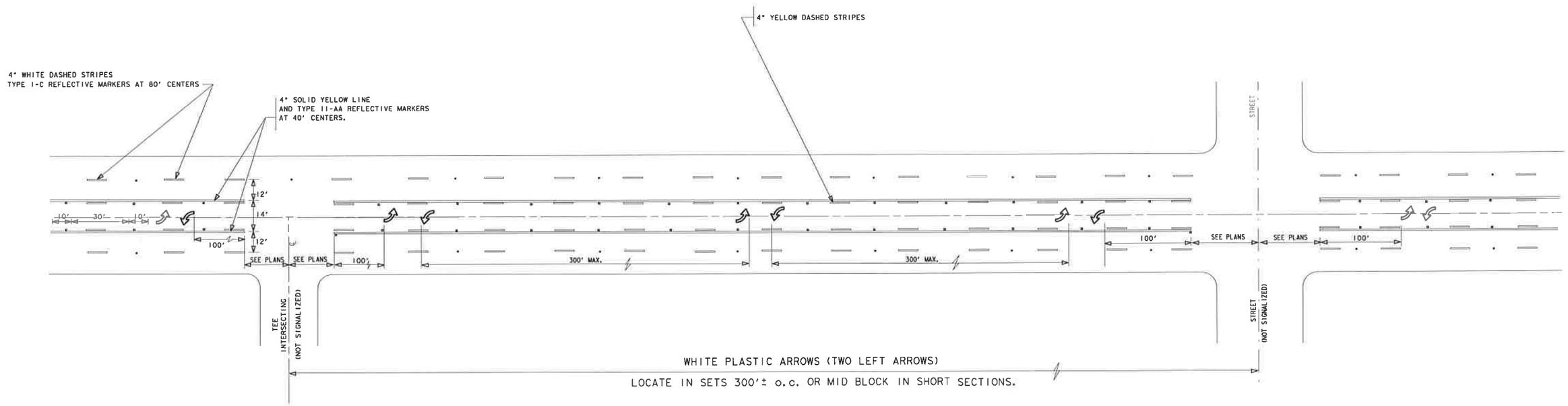

TWO WAY LEFT TURN LANE DETAILS
NON-SIGNALIZED INTERSECTIONS

NOTE: REFLECTIVE RAISED PAVEMENT MARKERS SHOULD BE IN ACCORDANCE WITH STATE STANDARDS PM(2)-00A(POSITIONING GUIDANCE).

PAVEMENT MARKING ARROWS SHALL COMPLY TO TEXAS M.U.T.C.D.

TWO WAY LEFT TURN LANE DETAILS
SAN ANTONIO DISTRIST STANDARD

REVISED: APRIL 14, 2003
AUGUST 7, 2002

SHEET 2 OF 5

© 2002 Texas Department of Transportation

FED. RD. DIV. NO.	FEDERAL AID PROJECT NO.		SHEET NO.
6			756
STATE	STATE DIST. NO.	COUNTY	
TEXAS		BEXAR	
CONT.	SECT.	JOB	HIGHWAY NO.
2708	01	022, ETC	FM2696

PLAN

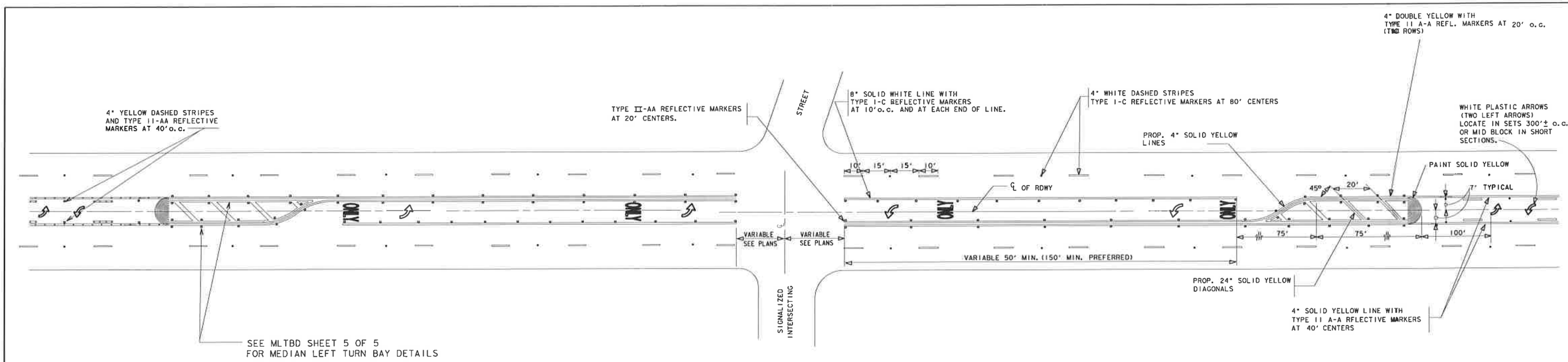

TYPICAL
TWO WAY LEFT TURN LANE DETAILS
SIGNALIZED INTERSECTION

LEGEND

▫ REFLECTIVE MARKER

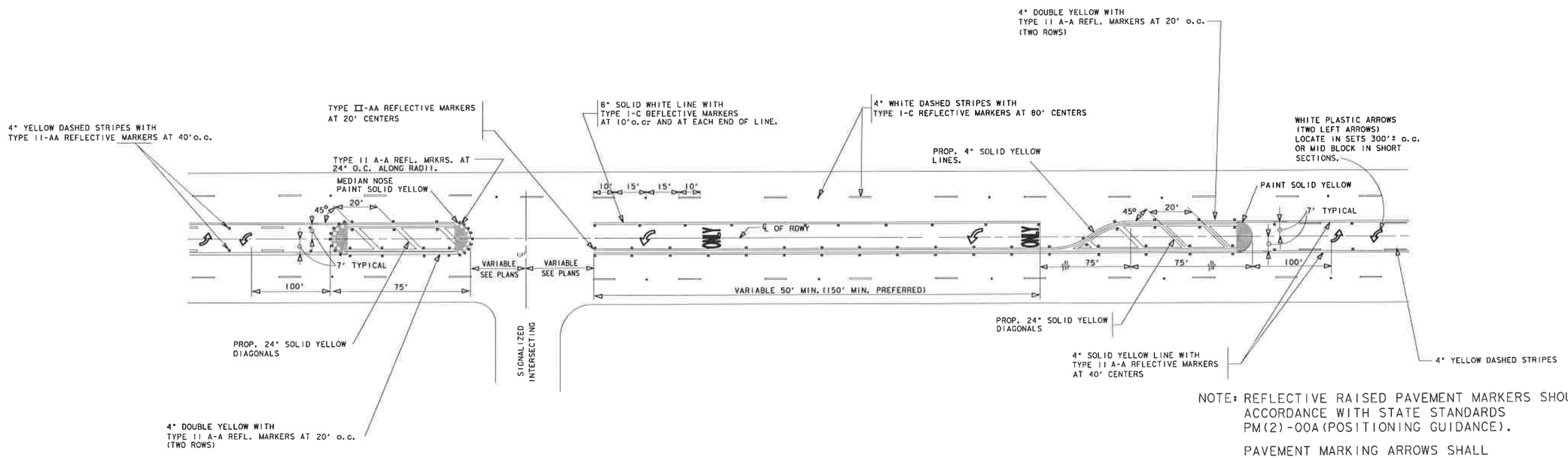

NOTE: REFLECTIVE RAISED PAVEMENT MARKERS SHOULD BE IN ACCORDANCE WITH STATE STANDARDS PM(2)-00A (POSITIONING GUIDANCE).

PAVEMENT MARKING ARROWS SHALL COMPLY TO TEXAS M.U.T.C.D.

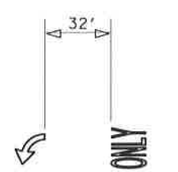

LEGEND
TYPICAL DETAIL

TYPICAL
TWO WAY LEFT TURN LANE DETAILS
SIGNALIZED TEE INTERSECTION

TWO WAY LEFT TURN LANE DETAILS
SAN ANTONIO DISTRICT STANDARD

REVISED: APRIL 14, 2003
OCTOBER 2, 2002

SHEET 3 OF 5

© 2002 Texas Department of Transportation

FED. RD. DIV. NO.	FEDERAL AID PROJECT NO.	SHEET NO.
6		757

STATE	STATE DIST. NO.	COUNTY	
TEXAS		BEXAR	
CONT.	SECT.	JOB	HIGHWAY NO.
2708	01	022, ETC	FM2696

PLAN

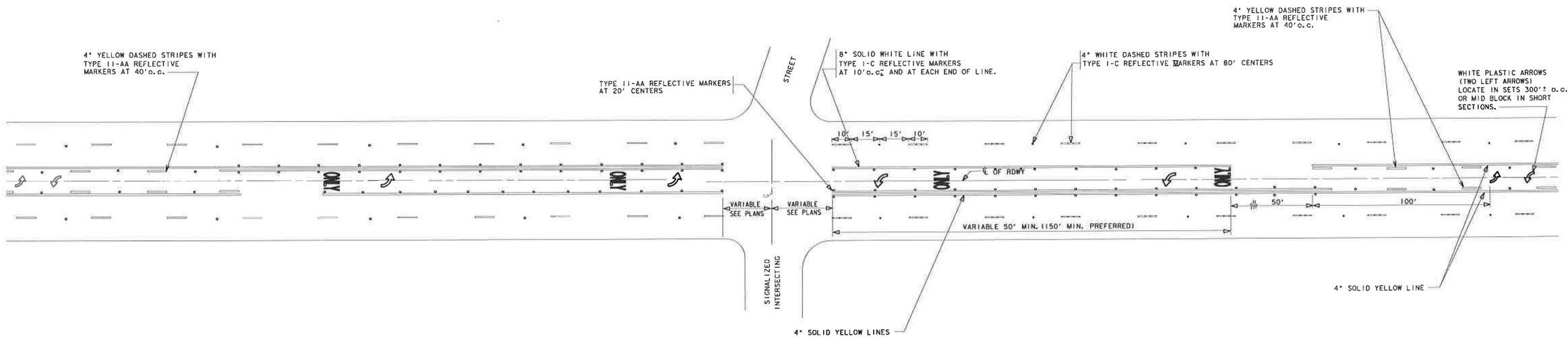

TYPICAL
TWO WAY LEFT TURN LANE DETAILS
SIGNALIZED INTERSECTION

LEGEND

▫ REFLECTIVE MARKER

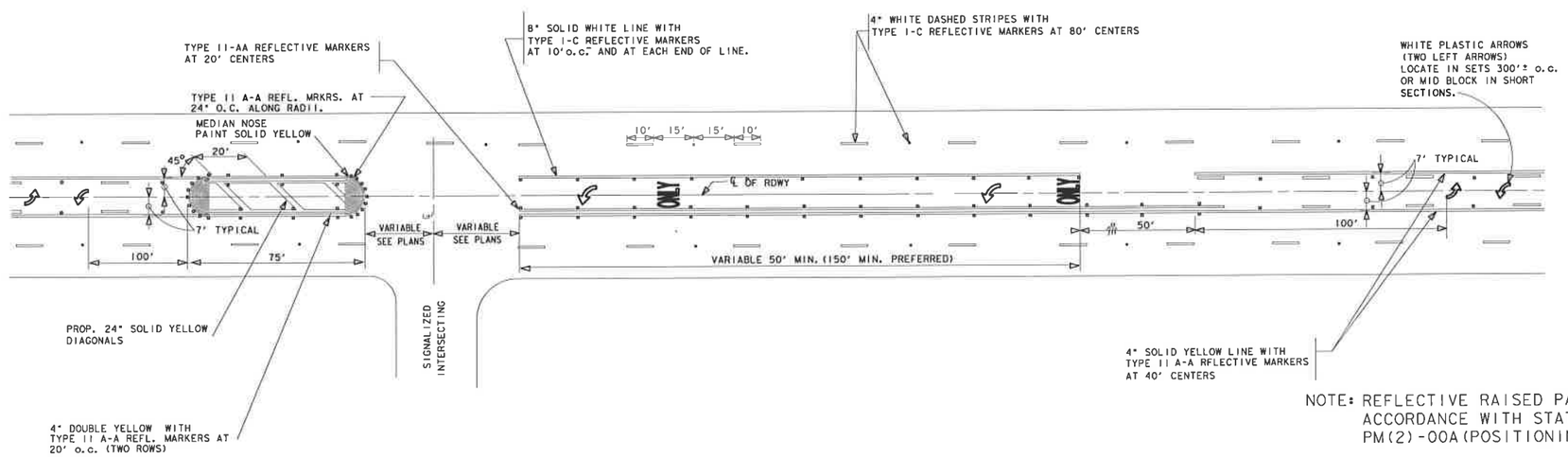

TYPICAL
TWO WAY LEFT TURN LANE DETAILS
SIGNALIZED TEE INTERSECTION

NOTE: REFLECTIVE RAISED PAVEMENT MARKERS SHOULD BE IN ACCORDANCE WITH STATE STANDARDS PM(2)-00A(POSITIONING GUIDANCE).

PAVEMENT MARKING ARROWS SHALL COMPLY TO TEXAS M.U.T.C.D.

TWO WAY LEFT TURN LANE DETAILS
SAN ANTONIO DISTRICT STANDARD

REVISED: APRIL 14, 2003
OCTOBER 2, 2002

SHEET 4 OF 5

© 2002 Texas Department of Transportation

FED. RD. DIV. NO.	FEDERAL AID PROJECT NO.	SHEET NO.
6		758

STATE	STATE DIST. NO.	COUNTY
TEXAS		BEXAR

CONT.	SECT.	JOB	HIGHWAY NO.
2708	01	022, ETC	FM2696

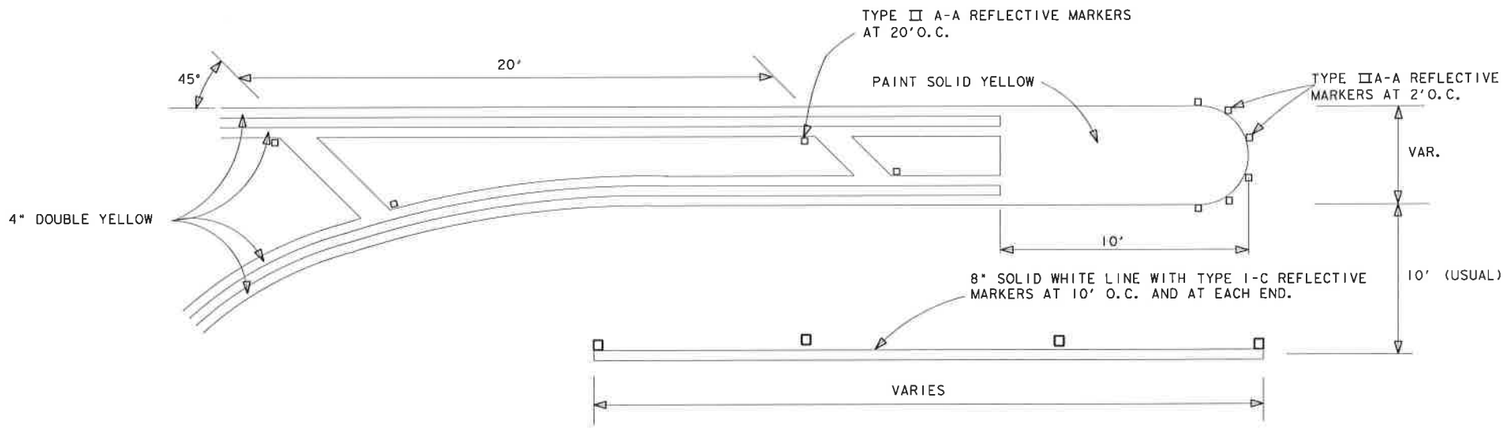

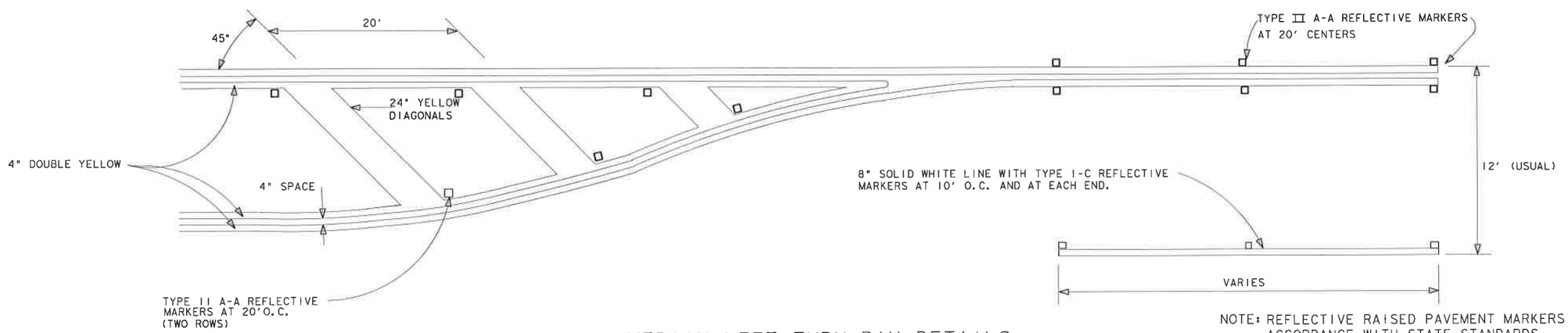

MEDIAN LEFT TURN BAY DETAILS

NOTE: REFLECTIVE RAISED PAVEMENT MARKERS SHOULD BE IN ACCORDANCE WITH STATE STANDARDS PM(2)-00A(POSITIONING GUIDANCE).

PAVEMENT MARKING ARROWS SHALL COMPLY TO TEXAS M.U.T.C.D.

TWO WAY LEFT TURN LANE DETAILS

SAN ANTONIO DITRICT STANDARD

SHEET 5 OF 5

© 2002 Texas Department of Transportation

FED. RD. DIV. NO.	FEDERAL AID PROJECT NO.		SHEET NO.
6			759
STATE	STATE DIST. NO.	COUNTY	
TEXAS	SAT.	BEXAR	
CONT.	SECT.	JOB	HIGHWAY NO.
2708	01	022, ETC	FM2696

REVISED: APRIL 14, 2003
OCTOBER 2, 2002

1. Do not alter Sheet Design or Font style, size or weight - match text attributes.
2. If additional space is needed for text, insert section, fence and adjust sections up or down as needed for proj. Alnmg and readability but do not relocate from its relative position.

Date and Time Plotted: 2/5/2008 1:50:40 PM

File Name: $(_USTN_USERNAME)
File Name: ...\PSJ\ENVIRONMENTAL\EPIC.dgn

During the design phase of project development the following environmental permits, issues and commitments have been developed during coordination with resource agencies, local governmental entities and the general public. Any change orders and/or deviations to the final design must be reported to the Engineer prior to commencement of construction activities, as additional environmental clearances may be required.

I. Clean Water Act, Section 402 National Pollutant Discharge Elimination System
(Addresses MS4 requirements)

Follow the Stormwater Pollution Prevention Plan and specifications to prevent or correct erosion that may develop during construction. All temporary erosion controls would be in compliance with TxDOT Standard Specifications and would be in place, according to the construction plans, prior to the commencement of construction related activities and inspected on a regular basis.

☐ No Action Required ☑ Required Action

Action No.	Waters of the US/Station # R/L of Centerline	Commitment
1.	0+00 TO 213+00	TCEQ, TPDES, CGP and NOI
2.		

II. Clean Water Act, Section 401 and 404 Compliance

Filling, dredging or excavating in any water bodies, rivers, creeks, streams, wetlands or wet areas is prohibited unless specified in the USACE permit and approved by the Engineer.

Any material originating from a USACE jurisdictional water will be used within the project limits in an upland area. Any material to be placed in a USACE jurisdictional water is to originate from an upland area within the project limits or as approved by the Engineer.

☐ No Permit Required ☑ 404 Permit and 401 Certification Required

The Contractor must adhere to all of the terms and conditions associated with the following permit(s):

Permit	Required Action	Waters of the US	Applicable Plan Sheet Title
1.	NWP 14 (W/ PCN)	PANTHER SPRINGS CREEK	*STRUCTURE No.3 STA 37+40.00
2.	NWP 14 (W/ PCN)	PANTHER SPRINGS CREEK	*STRUCTURE No.4 STA 54+00.00
3.	NWP 14 (W/ PCN)	PANTHER SPRINGS CREEK	*STRUCTURE No.9 STA 173+00.00
4.			
5.			

* NO WORK SHALL BEGIN AT THESE LOCATIONS UNTIL APPROVAL OF THE PRE-CONSTRUCTION NOTIFICATION (PCN) FROM THE ARMY CORPS OF ENGINEERS (ACOE).

III. Cultural Resources

Refer to TxDOT Standard Specifications in the event historical issues or archeological artifacts are found during construction. Upon discovery of archeological artifacts (bones, burnt rock, flint, pottery, etc.) cease work in the immediate area and contact the Engineer immediately.

☑ No Action Required ☐ Required Action

Action No.	Station # R/L of Centerline	Commitment
1.		
2.		
3.		
4.		
5.		

IV. Hazardous Materials or Contamination Issues

If potentially hazardous material and/or contaminated media (i.e. soil, groundwater, surface water, sediment, building materials) are unexpectedly encountered during construction, cease work in the immediate area and contact the Engineer immediately.

☑ No Action Required ☐ Required Action

Action No.	Station # R/L of Centerline	Commitment
1.		
2.		
3.		
4.		
5.		

V. Federal Listed, and Proposed Threatened and Endangered Species, Critical Habitat, State Listed Species, Candidate Species and Migratory Birds

☐ No Action Required ☑ Required Action

Action No.	Station # R/L of Centerline	Commitment
1. MIGRATORY BIRD NESTS: Schedule construction activities as needed to meet the following requirements: A. Do not remove or destroy any active migratory bird nests (nests containing eggs and/or flightless birds) at any time of year. Inactive nests may be removed except on/in structures where special requirements apply. B. On/in structures, if there are any active nests, they shall not be removed until all nests become inactive. After inactive nests are removed and/or before nest activity begins, deterrent materials may be applied to the structures to prevent future nest building.		
2. See Item 5 in General Notes.		
3. FEDERALLY LISTED KARST INVERTABRATE (Rhadine exilis): Inhabiting cave located in ROW near Structure No 9: A. A minimum of one acre of the ROW adjacent to the cave will be designated as a non-use area for TxDOT activities. The storage of construction materials near the cave will cease and the area will be allowed to re-vegetate. Pending approval from the TCEQ, the entrance to the cave will be secured in a manner that approximates the condition of the cave prior to the sinkhole collapse. A matress gabion constructed of large diameter crushed limestone within a steel mesh framework will be laid over the entrance. Geotextile fabric will be wrapped around the sides of the gabion and the disturbed soil from around the site will be re-graded around the gabion. the top of the gabion will remain uncovered, allowing troglexene ingress and egress from the cave through voids in the gabion. Similarly, recharge will be unimpeded by the gabion. Regrading of the area around the cave entrance will be conducted in a manner the replicates the likely surface catchment of the cave as it existed prior to recent disturbance. Following regrading, the disturbed area will be re-vegetated with a seed mix of predominantly native grass and wildflower species.		

LISTED SPECIES

If any of the listed species are observed, cease work in the immediate area, do not disturb species or habitat and contact the Engineer immediately. The work may not remove active nests from bridges and other structures during nesting season of the birds associated with the nests.

If caves or sinkholes are discovered, cease work in the immediate area, and contact the Engineer immediately.

VI. Vegetation Resources

☐ No Action Required ☑ Required Action

Action No.	Station # R/L of Centerline	Commitment
1. MATURE LIVE OAK TREES:	Sta 123+00 Rt Sta 259+80 Rt Sta 343+80 Rt Sta 355+00 Rt	Avoid impacts to all mature oak trees
2. SNAGS:	Sta 54+00 Rt Sta 161+00 Rt Sta 153+00 Rt	Protect snags
3.		

VII. Edwards Aquifer

☐ No Action Required ☑ Required Action

Action No.	Station # R/L of Centerline	Commitment
1.	0+00 TO 213+00	

COMMITMENT:

A. FOLLOW EDWARDS AQUIFER PROTECTION PLAN (EAPPp AND WATER POLLUTION ABATEMENT PLAN (WPAP) REQUIREMENTS INCLUDING ANY OTHER CONDITIONS LISTED IN THE TCEQ AUTHORIZATION LETTER.

B. SEE TCEQ WPAP GENERAL CONSTRUCTION NOTES.

C. INSTALL/MAINTAIN VEGETATION FILTER STRIPS AS PERMANENT BMP.

D. IF ANY SENSITIVE FEATURE IS DISCOVERED DURING CONSTRUCTION, IMMEDIATELY SUSPEND ALL REGULATED ACTIVITIES NEAR THE SENSITIVE FEATURE AND NOTIFY THE TxDOT ENVIRONMENTAL OFFICE. CONSTRUCTION NEAR THE SENSITIVE FEATURE MAY NOT PROCEED UNTIL THE FEATURE HAS BEEN EVALUATED AND APPROVAL TO CONTINUE CONSTRUCTION HAS BEEN RECEIVED. DO NOT STORE FUELS AND/OR HAZARDOUS SUBSTANCES ON STATE ROW OR EASEMENTS.

E. REMEDIATE ANY SPILLS AND IMMEDIATELY REPORT SPILLS(INCLUDING SANITARY SEWER DISCHARGE) OF REPORTABLE QUANTITIES TO THE BEXAR COUNTY ENGINEER AND TO THE FOLLOWING AGENCIES:

NATIONAL RESPONSE CENTER:	(800) 424-8802
EDWARDS AQUIFER AUTHORITY:	(210) 222-2204
STATE EMERGENCY RESPONSE CENTER:	(800) 832-8224 (IF AFTER HOURS) OR
TCEQ REGIONAL OFFICE:	(210) 490-3096

F. REPORT SPILLS WITHIN 24 HOURS UNLESS OTHER REGULATIONS REQUIRE MORE EXPEDIENT NOTIFICATION.

G. UTILIZE TEMPORARY AND PERMANENT BMPS DURING CONSTRUCTION. BMPS AND SW3P MEASURES ARE SHOWN ON THE SW3P NARRATIVE AND ASSOCIATED SW3P LAYOUT SHEETS.

H. INTENTIONAL DISCHARGES OF SEDIMENT LADEN STORM WATER DURING CONSTRUCTION ARE NOT ALLOWED.

2. SEE ITEM 8 IN THE GENERAL NOTES.

3.

4.

5.

VIII. Other Environmental Issues

☑ No Action Required ☐ Required Action

Action No.	Station # R/L of Centerline	Commitment
1.		
2.		
3.		
4.		
5.		

01/06

TEDSI INFRASTRUCTURE GROUP
Consulting Engineers
10999 IH 10 West • Suite 320
San Antonio, Texas 78230
(210) 858-0610

© 2003 Texas Department of Transportation
(San Antonio District)

ENVIRONMENTAL PERMITS, ISSUES AND COMMITMENTS (EPIC)

FED.RD. DIV.NO.	PROJECT NO.		HIGHWAY NO.
6			FM 2696
STATE	DISTRICT	COUNTY	
TEXAS	SAT	BEXAR	
CONTROL	SECTION	JOB	SHEET NO.
			760

TEXAS COMMISSION ON ENVIRONMENTAL EQUALITY
WATER POLLUTION ABATEMENT PLAN
GENERAL CONSTRUCTION NOTES

1. WRITTEN CONSTRUCTION NOTIFICATION MUST BE GIVEN TO THE APPROPRIATE TCEQ REGIONAL OFFICE NO LATER THAN 48 HOURS PRIOR TO COMMENCEMENT OF THE REGULATED ACTIVITY. INFORMATION MUST INCLUDE THE DATE ON WHICH THE REGULATED ACTIVITY WILL COMMENCE, THE NAME OF THE APPROVED PLAN FOR THE REGULATED ACTIVITY, AND THE NAME OF THE PRIME CONTRACTOR AND THE NAME AND TELEPHONE NUMBER OF THE CONTACT PERSON.

2. ALL CONTRACTORS CONDUCTING REGULATED ACTIVITIES ASSOCIATED WITH THIS PROJECT MUST BE PROVIDED WITH COMPLETE COPIES OF THE APPROVED WATER POLLUTION ABATEMENT PLAN AND THE TCEQ LETTER INDICATING THE SPECIFIC CONDITIONS OF ITS APPROVAL. DURING THE COURSE OF THESE REGULATED ACTIVITES, THE CONTRACTORS ARE REQUIRED TO KEEP ON-SITE COPIES OF THE APPROVED PLAN AND APRROVAL LETTER.

3. IF ANY SENSITIVE FEATURE IS DISCOVERED DURING CONSTRUCTION, ALL REGULATED ACTIVITIES NEAR THE SENSITIVE FEATURE MUST BE SUSPENDED IMMEDIATELY. THE APPROPRIATE TCEQ REGIONAL OFFICE MUST BE IMMEDIATELY NOTIFIED OF ANY SENSITIVE FEATURES ENCOUNTERED DURING CONSTRUCTION. THE REGULATED ACTIVITIES NEAR THE SENSITIVE FEATURE MAY NOT PROCEED UNTIL THE TCEQ HAS REVIEWED AND APPROVED THE METHODS PROPSED TO PROTECT THE SENSITIVE FEATURE AND THE EDWARDS AQUIFER FROM ANY POTENTIALLY ADVERSE IMPACTS TO WATER QUALITY.

4. NO TEMPORARY ABOVEGROUND HYDROCARBON AND HAZARDOUS SUBSTANCE STORAGE TANK SYSTEM IS INSTALLED WITHIN 150 FEET OF DOMESTIC, INDUSTRIAL, IRRIGATION, OR PUBLIC WATER SUPPLY WELL, OR OTHER SENSITIVE FEATURE.

5. PRIOR TO COMMENCEMENT OF CONSTRUCTION, ALL TEMPORARY EROSION AND SEDIMENTATION (E&S) CONTROL MEASURES MUST BE PROPERLY SELECTED, INSTALLED, AND MAINTAINED IN ACCORDANCE WITH THE MANUFACTURERS SPECIFICATIONS AND GOOD ENGINEERING PRACTICES. CONTROLS SPECIFIED IN THE TEMPORARY STORM WATER SECTION OF THE APPROVED EDWARDS AQUIFER PROTECTION PLAN ARE REQUIRED DURING CONSTRUCTION. IF INSPECTIONS INDICATE A CONTROL HAS BEEN USED INAPPROPRIATELY, OR INCORRECTLY, THE APPLICANT MUST REPLACE OR MODIFY THE CONTROL FOR SITE SITUATIONS. THE CONTROLS MUST REMAIN IN PLACE UNTIL DISTURBED AREAS ARE REVEGETATED AND THE AREAS HAVE BECOME PERMANENTLY STABILIZED.

6. IF SEDIMENT ESCAPES THE CONSTRUCTION SITE, OFF-SITE ACCUMULATIONS OF SEDIMENT MUST BE REMOVED AT A FREQUENCY SUFFICIENT TO MINIMIZE OFFSITE IMPACTS TO WATER QUALITY (E.G., FUGITIVE SEDIMENT IN STREET BEING WASHED INTO SURFACE STREAMS OR SENSITIVE FEATURES BY THE NEXT RAIN).

7. SEDIMENT MUST BE REMOVED FROM SEDIMENT TRAPS OR SEDIMENTATION PONDS NOT LATER THAN WHEN DESIGN CAPACITY HAS BEEN REDUCED BY 50%. A PERMANENT STAKE MUST BE PROVIDED THAT CAN INDICATE WHEN THE SEDIMENT OCCUPIES 50% OF THE BASIN VOLUME.

8. LITTER, CONSTRUCTION DEBRIS, AND CONSTRUCTION CHEMICALS EXPOSED TO STORMWATER SHALL BE PREVENTED FROM BECOMING A POLLUTANT SOURCE FOR STORMWATER DISCHARGES (E.G., SCREENING OUTFALLS, PICKED UP DAILY).

9. ALL SPOILS (EXCAVTED MATERIALS) GENERATED FROM THE PROJECT SITE MUST BE STORED ON-SITE WITH PROPER E&S CONTROLS. FOR STORAGE OR DISPOSAL OF SPOILS AT ANOTHER SITE ON THE EDWARDS AQUIFER RECHARGE ZONE, THE OWNER OF THE SITE MUST RECEIVE APPROVAL OF A WATER POLLUTION ABATEMENT PLAN FOR THE PLACEMENT OF FILL MATERIAL OR MASS GRADING PRIOR TO THE PLACEMENT OF SPOILS AT THE OTHER SITE.

10. STABILIZATION MEASURES SHALL BE INITIATED AS SOON AS PRACTICABLE IN PORTIONS OF THE SITE WHERE CONSTSTRUCTION ACTIVITIES HAVE TEMPORARILY OR PERMANENTLY CEASED, BUT IN NO CASE MORE THAN 14 DAYS AFTER THE CONSTRUCTION ACTIVITY IN THAT PORTION OF THE SITE HAS TEMPORARILY OR PERMANENTLY CEASED. WHERE THE INITIATION OF STABILIZATION MEASURES BY THE 14TH DAY AFTER CONSTRUCTION ACTIVITY TEMPORARY OR PERMANENTLY CEASE IS PRECLUDED BY WEATHER CONDITIONS, STABILIZATION MEASURES SHALL BE INITIATED AS SOON AS PRACTICABLE. WHERE CONSTRUCTION ACTIVITY ON A PORTION OF THE SITE IS TEMPORARILY CEASED, AND EARTH DISTURBING ACTIVITIES WILL BE RESUMED WITHIN 21 DAYS, TEMPORARY STABILIZATION MEASURES DO NOT HAVE TO BE INITIATED ON THAT PORTION OF SITE. IN AREAS EXPERIENCING DROUGHTS WHERE THE INITIATION OF STABILIZATION MEASURES BY THE 14TH DAY AFTER CONSTRUCTION ACTIVITY HAS TEMPORARILY OR PERMANENTLY CEASED IS PRECLUDED BY SEASONAL ARID CONDITIONS, STABILIZATION MEASURES SHALL BE INITIATED AS SOON AS PRACTICABLE.

11. THE FOLLOWING RECORDS SHALL BE MAINTAINED AND MADE AVAILABLE TO THE TCEQ UPON REQUEST: THE DATES WHEN MAJOR GRADING ACTIVITIES OCCUR; THE DATES WHEN CONSTRUCTION ACTIVITIES TEMPORARILY OR PERMANENTLY CEASE ON A PORTION OF THE SITE; AND THE DATES WHEN STABILIZATION MEASURES ARE INITIATED.

12. THE HOLDER OF ANY APPROVED EDWARD AQUIFER PROTECTION PLAN MUST NOTIFY THE APPROPRIATE REGIONAL OFFICE IN WRITING AND OBTAIN APPROVAL FROM THE EXECUTIVE DIRECTOR PRIOR TO INITIATING ANY OF THE FOLLOWING:

    A. ANY PHYSICAL OR OPERATIONAL MODIFICATION OF ANY WATER POLLUTION ABATEMENT STRUCTURE(S), INCLUDING BUT NOT LIMITED TO PONDS, DAMS, BERMS, SEWAGE TREATMENT PLANTS, AND DIVERSIONARY STRUCTURES;

    B. ANY CHANGE IN THE NATURE OR CHARACTER OF THE REGULATED ACTIVITY FROM THAT WHICH WAS ORIGINALLY APPROVED OR A CHANGE WHICH WOULD SIGNIFICANTLY IMPACT THE ABILITY OF THE PLAN TO PREVENT POLLUTION OF THE EDWARDS AQUIFER;

    C. ANY DEVELOPMENT OF LAND PREVIOUSLY IDENTIFIED AS UNDEVELOPED IN THE ORIGINAL WATER POLLUTION ABATEMENT PLAN.

AUSTIN REGIONAL OFFICE 1921 CEDAR BEND, SUITE 150 AUSTIN, TX 78758-5336 PHONE (512) 339-2929 FAX (210) 339-3795	SAN ANTONIO REGIONAL OFFICE 14250 JUDSON ROAD SAN ANTONIO, TX 78233-4480 PHONE (210) 490-3096 FAX (210) 545-4329

TEXAS COMMISSION ON ENVIRONMENTAL EQUALITY
CONTRIBUTING ZONE PLAN
GENERAL CONSTRUCTION NOTES

1. WRITTEN CONSTRUCTION NOTIFICATION MUST BE GIVEN TO THE APPROPRIATE TCEQ REGIONAL OFFICE NO LATER THAN 48 HOURS PRIOR TO COMMENCEMENT OF THE REGULATED ACTIVITY. INFORMATION SHOULD INCLUDE THE DATE ON WHICH THE REGULATED ACTIVITY WILL COMMENCE, THE NAME OF THE APPROVED PLAN FOR THE REGULATED ACTIVITY, AND THE NAME OF THE PRIME CONTRACTOR WITH THE NAME AND TELEPHONE NUMBER OF THE CONTACT PERSON.

2. ALL CONTRACTORS CONDUCTING REGULATED ACTIVITIES ASSOCIATED WITH THIS PROJECT SHOULD BE PROVIDED WITH COMPLETE COPIES OF THE APPROVED CONTRIBUTING ZONE PLAN AND THE TCEQ LETTER INDICATING THE SPECIFIC CONDITIONS OF ITS APPROVAL. DURING THE COURSE OF THESE REGULATED ACTIVITES, THE CONTRACTOR(S) SHOULD KEEP COPIES OF THE APPROVED PLAN AND APPROVAL LETTER ON-SITE.

3. NO TEMPORARY ABOVEGROUND HYDROCARBON AND HAZARDOUS SUBSTANCE STORAGE TANK SYSTEM MAY BE INSTALLED WITHIN 150 FEET OF A DOMESTIC, INDUSTRIAL, IRRIGATION, OR PUBLIC WATER SUPPLY WELL.

4. PRIOR TO COMMENCING CONSTRUCTION, ALL TEMPORARY EROSION AND SEDIMENTATION (E&S) CONTROL MEASURES MUST BE PROPERLY SELECTED, INSTALLED, AND MAINTAINED IN ACCORDANCE WITH THE MANUFACTURER'S SPECIFICATIONS AND GOOD ENGINEERING PRACTICES. CONTROLS SPECIFIED IN THE SWPPP SECTION OF THE APPROVED EDWARDS AQUIFER CONTRIBUTING ZONE PLAN ARE REQUIRED DURING CONSTRUCTION. IF INSPECTIONS INDICATE A CONTROL HAS BEEN USED INAPPROPRIATELY, OR INCORRECTLY, THE APPLICANT MUST REPLACE OR MODIFY THE CONTROL FOR SITE SITUATIONS. THE CONTROLS MUST REMAIN IN PLACE UNTIL DISTURBED AREAS ARE REVEGETATED AND THE AREAS HAVE BECOME PERMANENTLY STABILIZED.

5. IF SEDIMENT ESCAPES THE CONSTRUCTION SITE, OFF-SITE ACCUMULATIONS OF SEDIMENT MUST BE REMOVED AT A FREQUENCY SUFFICIENT TO MINIMIZE OFFSITE IMPACTS TO WATER QUALITY (E.G., FUGITIVE SEDIMENT IN STREET BEING WASHED INTO SURFACE STREAMS OR SENSITIVE FEATURES BY THE NEXT RAIN).

6. SEDIMENT MUST BE REMOVED FROM SEDIMENT TRAPS OR SEDIMENTATION PONDS NOT LATER THAN WHEN DESIGN CAPACITY HAS BEEN REDUCED BY 50%. A PERMANENT STAKE MUST BE PROVIDED THAT CAN INDICATE WHEN THE SEDIMENT OCCUPIES 50% OF THE BASIN VOLUME.

7. LITTER, CONSTRUCTION DEBRIS, AND CONSTRUCTION CHEMICALS EXPOSED TO STORMWATER SHALL BE PREVENTED FROM BECOMING A POLLUTANT SOURCE FOR STORMWATER DISCHARGES (E.G., SCREENING OUTFALLS, PICKED UP DAILY).

8. ALL SPOILS (EXCAVTED MATERIALS) GENERATED FROM THE PROJECT SITE AND STORED ON-SITE MUST HAVE PROPER E&S CONTROLS INSTALLED.

9. STABILIZATION MEASURES SHALL BE INITIATED AS SOON AS PRACTICABLE IN PORTIONS OF THE SITE WHERE CONSTSTRUCTION ACTIVITIES HAVE TEMPORARILY OR PERMANENTLY CEASED, AND CONSTRUCTION ACTIVITIES WILL NOT RESUME WITHIN 21 DAYS. WHEN THE INITIATION OF STABILIZATION MEASURES BY THE 14TH DAY IS PRECLUDED BY WEATHER CONDITIONS, STABILIZATION MEASURES SHALL BE INITIATED AS SOON AS PRACTICABLE.

10. THE FOLLOWING RECORDS SHALL BE MAINTAINED AND MADE AVAILABLE TO THE TCEQ UPON REQUEST: THE DATES WHEN MAJOR GRADING ACTIVITIES OCCUR; THE DATES WHEN CONSTRUCTION ACTIVITIES TEMPORARILY OR PERMANENTLY CEASE ON A PORTION OF THE SITE; AND THE DATES WHEN STABILIZATION MEASURES ARE INITIATED.

11. THE HOLDER OF ANY APPROVED CONTRIBUTING ZONE PLAN MUST NOTIFY THE APPROPRIATE REGIONAL OFFICE IN WRITING AND OBTAIN APPROVAL FROM THE EXECUTIVE DIRECTOR PRIOR TO INITIATING ANY OF THE FOLLOWING:

    A. ANY PHYSICAL OR OPERATIONAL MODIFICATION OF ANY BEST MANAGEMENT PRACTICES OR STRUCTURE(S), INCLUDING BUT NOT LIMITED TO TEMPORARY OR PERMANENT PONDS, DAMS, BERMS, SILT FENCES, AND DIVERSIONARY STRUCTURES;

    B. ANY CHANGE IN THE NATURE OR CHARACTER OF THE REGULATED ACTIVITY FROM THAT WHICH WAS ORIGINALLY APPROVED;

    C. ANY CHANGE THAT WOULD SIGNIFICANTLY IMPACT THE ABILITY TO PREVENT POLLUTION OF THE EDWARDS AQUIFER AND HYDROLOGICALLY CONNECTED SURFACE WATER; OR

    D. ANY DEVELOPMENT OF LAND PREVIOUSLY IDENTIFIED IN A CONTRIBUTING ZONE PLAN AS UNDEVELOPED.

AUSTIN REGIONAL OFFICE 1921 CEDAR BEND, SUITE 150 AUSTIN, TX 78758-5336 PHONE (512) 339-2929 FAX (210) 339-3795	SAN ANTONIO REGIONAL OFFICE 14250 JUDSON ROAD SAN ANTONIO, TX 78233-4480 PHONE (210) 490-3096 FAX (210) 545-4329

NO.	REVISION	BY	DATE

CP&Y Chiang, Patel & Yerby, Inc.

BEXAR COUNTY
PUBLIC WORKS DIVISION

F.M. 2696 (BLANCO ROAD)

TCEQ GENERAL
CONSTRUCTION NOTES

SHEET 1 OF 1

Designed: JAS	STATE	BEXAR COUNTY FILE NUMBER	PLAN SET NO.
Checked: DRW	TEXAS		761
Drawn: TAS	COUNTY		OF
Checked: DRW	BEXAR	2708-01-022, ETC.	842

pw:/Active Projects/BEX6102/8.00 Plans and Drawings/8.10 Cut Sheets/8.1.04 Drainage/6102CSRDTCEQNOTES.DGN
11/5/2007 12:36:45 AM

Date and Time Plotted: 12/9/2007 12:45:48 PM

Note To Designer:
1. Do not alter Sheet Design (style, size or weight - match text attributes.
2. If additional space is need, a numbered section, fence and adjust sections up or down as needed for proportioning and readability but do not relocate from it's relative position.

File Name: $(KUSTN*USERNAME)
File Name: ...~1\ENVIRONMENTAL\sw3pnarr.dgn

A. GENERAL SITE DATA

1. PROJECT LIMITS: *Same as stated on the Title Sheet*

2. PROJECT SITE MAPS:
   - *Project Latitude 29° 37' 16"* *Project Longitude 98° 30' 47"*
   - *Project Location Map: Shown on Title Sheet*
   - *Drainage Patterns: Shown on Drainage Area Maps*
   - *Approx. Slopes Anticipated After Major Gradings and Areas of Soil Disturbance: Shown on Typical Sections*
   - *Major Controls and Locations of Stabilization Practices: Shown on SW3P Sheets*
   - *Project Specific Locations: Off-site waste, borrow, or storage areas are not part of this SW3P.*
   - *Surface Waters and Discharge Locations: Shown on Drainage and Culvert Layout Sheets*

3. PROJECT DESCRIPTION: *Reconstruct & expand 2 to 4 ln w/turn lane, sidewalks & bike lanes.*

   - *Joint-bid utilities are covered by this SW3P*

4. FOR MAJOR SOIL DISTURBING ACTIVITIES SEQUENCE OF EVENTS:

   1. *Install controls down-slope of work area and initiate inspection and maintenance activities.*
   2. *Begin phased construction with interim stabilization practices. Adjust erosion and sedimentation controls during construction to meet requirements and changing conditions and as directed/approved by the Engineer.*
   3. *Major soil disturbing activities may include but are not limited to: right-of-way preparation, cut and/or fill to improve roadway profile, final grading and placement of topsoil and the following (if marked):*

      X *Placement of road base*
      X *Exstensive ditch grading*
      X *Upgrading or replacing culverts or bridges*
      X *Temporary detour road(s)*
      ___ *Other:* _____

5. EXISTING AND PROPOSED CONDITIONS:

   Description of existing vegetative cover: Seeded Grasses
   Percentage of existing vegetative cover: 79%
   Existing vegetative cover:(mark one) ___ *Thick or uniformly established*
   X *Thin and Patchy*
   ___ *None or minimal cover*
   Description of soils: Tarrant Braket Association - Shallow to very Shallow Soils over Limestone
   Site Acreage: 78 *Acreage disturbed: 76*
   Site runoff coefficient (pre-construction): .21 *Site runoff coefficient (post-construction): .57*

6. RECEIVING WATERS: *(Mark all that apply)*

   X *A classified stream does not pass through project.*
   ___ *A classified stream passes through project. Name* _____ *Segment Number* _____
   Name of receiving waters that will receive discharges from disturbed areas of the project: SALADO CREEK (SEG. 1910)

   Site is in a Municipal Separate Storm Sewer System (MS4).
   MS4 Operator (name): CITY OF SAN ANTONIO

B. BEST MANAGEMENT PRACTICES

General timing or sequence for implementation of BMPs shall be as required and/or as directed/approved by the Engineer to provide adequate controls. BMPs shown on plan sheets are to be considered "proposed" unless/until install date is shown. BMPs are to reduce sediments from road construction activities.

1. SOIL STABILIZATION PRACTICES: (Select T = Temporary or P = Permanent, as applicable)

T/P	SEEDING	T/P	PRESERVATION OF NATURAL RESOURCES
___	MULCHING (Hay or Straw)	T	FLEXIBLE CHANNEL LINER
___	BUFFER ZONES	___	RIGID CHANNEL LINER
___	PLANTING	T	SOIL RETENTION BLANKET
___	COMPOST/MULCH FILTER BERM	P	COMPOST MANUFACTURED TOPSOIL
___	SODDING	___	OTHER: (Specify Practice)

2. STRUCTURAL PRACTICES: (Select T = Temporary or P = Permanent, as applicable)

   T SILT FENCES
   ___ HAY BALES
   T ROCK FILTER DAMS
   ___ DIVERSION, INTERCEPTOR, OR PERIMETER DIKES
   ___ DIVERSION, INTERCEPTOR, OR PERIMETER SWALES
   ___ DIVERSION DIKE AND SWALE COMBINATIONS
   ___ PIPE SLOPE DRAINS
   ___ PAVED FLUMES
   T ROCK BEDDING AT CONSTRUCTION EXIT
   ___ TIMBER MATTING AT CONSTRUCTION EXIT
   ___ CHANNEL LINERS
   ___ SEDIMENT TRAPS
   ___ SEDIMENT BASINS
   ___ STORM INLET SEDIMENT TRAP
   ___ STONE OUTLET STRUCTURES
   P CURBS AND GUTTERS
   P STORM SEWERS
   ___ VELOCITY CONTROL DEVICES
   T OTHER: *(Sand Bags)*

3. STORM WATER MANAGEMENT:

   The proposed facility was designed in consideration of hydraulic design standards to convey stormwater in a manner that is protective of public safety and property. The control of erosion from the facility is inherent to the design. Additional factors affecting post-construction stormwater at the project location include:(mark all that apply)

   X *Existing or new vegetation provides natural filtration.*
   X *The design includes provisions for permanent erosion controls provided by strategically placed pervious and impervious surfaces.*
   ___ *Project includes permanent sedimentation controls (other than grass).*
   ___ *Velocities do not require dissipation devices.*
   ___ *Velocity-dissipation devices included in the design.*
   ___ *Other :* _____

4. NON-STORM WATER DISCHARGES:

   Off-site discharges are prohibited except as follows:

   1. *Discharges from fire fighting activities and/or fire hydrant flushings.*
   2. *Vehicle, external building, and pavement wash water where detergents and soaps are not used and where spills or leaks of toxic or hazardous materials have not occurred (unless all spilled material has been removed).*
   3. *Plain water used to control dust.*
   4. *Plain water originating from potable water sources.*
   5. *Uncontaminated groundwater, spring water or accumulated stormwater.*
   6. *Foundation or footing drains where flows are not contaminated with process materials such as solvents.*
   7. *Other:* _____

   Concrete truck wash water discharges on the site should be prohibited or minimized. If allowed by the Engineer, they must be managed in a manner so as not to contaminate surface water. They must not be located in areas of concentrated flow. Concrete truck wash-out locations must be shown on the SW3P Layout and included in the inspections.

   Hazardous material spill/leak shall be prevented or minimized. At a minimum, this includes asphalt products, fuels, oils, lubricants, solvents, paints, acids, concrete curing compounds and chemical additives for soil stabilization. BMPs shall be implemented to the storage areas of these products. All spills must be cleaned and disposed properly and reported to the Engineer. Report any release at or above the reportable quantity during a 24 hour period to the National Response Center at 1-800-424-8802.

C. OTHER REQUIREMENTS & PRACTICES

1. MAINTENANCE:

   All erosion and sediment controls shall be maintained in good working order. If a repair is necessary, it shall be performed before the next anticipated storm event but no later than 7 calendar days after the surrounding exposed ground has dried sufficiently to prevent further damage from equipment. If maintenance prior to the next anticipated storm event is impracticable, maintenance must be scheduled and accomplished as soon as practicable. Disturbed areas on which construction activities have ceased, temporarily or permanently, shall be stabilized within 14 calendar days unless they are scheduled to and do resume within 21 calendar days. The areas adjacent to creeks and drainageways shall have priority followed by protecting storm sewer inlets.

2. INSPECTION:

   For areas of the construction site that have not been finally stabilized, areas used for storage of materials, structural control measures, and locations where vehicles enter or exit the site, personnel provided by the permittee and familiar with the SW3P must inspect disturbed areas at least once every fourteen (14) calendar days and within twenty four (24) hours of the end of a storm of 0.5 inches or greater As an alternative to the above-described inspection schedule of once every fourteen (14) calendar days and within twenty four (24) hours of a storm of 0.5 inches or greater, the SW3P may be developed to require that these inspections will occur at least once every seven (7) calendar days. If this alternative schedule is developed, the inspection must occur on a specifically defined day, regardless of whether or not there has been rainfall since the previous inspectionAn inspection and Maintenance Report shall be prepared for each inspection and the controls shall be revised on the SW3P within seven (7) calendar days following the inspection.

3. WASTE MATERIALS:

   All non-hazardous municipal waste materials such as litter, rubbish, trash and garbage located on or originating from the project shall be collected and stored in a securely lidded metal dumpster, provided by the Contractor. The dumpster shall be emptied as necessary or as required by local regulation and the trash shall be hauled to a permitted disposal facility. The burying of non-hazardous municipal waste on the project shall not be permitted. Construction material waste sites, stockpiles and haul roads shall be constructed to minimize and control the amount of sediment that may enter receiving waters. Construction material waste sites shall not be located in any wetland, water body or stream bed. Construction staging areas and vehicle maintenance areas shall be constructed in a manner to minimize the runoff of pollutants.

4. OFFSITE VEHICLE TRACKING:

   Off-site vehicle tracking of sediments and the generation of dust must be minimized. Excess sediments on road shall be removed on a regular basis as directed/approved by the Engineer.

5. OTHER:

   See the EPIC sheet for additional environmental information.

TEDSI INFRASTRUCTURE GROUP
Consulting Engineers
10999 IH 10 West • Suite 320
San Antonio, Texas 78230
(210) 858-0610

STATE OF TEXAS
STEVEN D. TEMPLER
88656
LICENSED
PROFESSIONAL ENGINEER

Signature of Registrant & Date, P.E. 12-09-2007

REVISION DATE: 08/04

© 2003 Texas Department of Transportation

STORM WATER POLLUTION PREVENTION PLAN (SW3P)

FED. RD. DIV. NO.	FEDERAL AID PROJECT NO.		HIGHWAY NO.
6			FM 2696
STATE	DISTRICT	COUNTY	
TEXAS	SAT	BEXAR	
CONTROL	SECTION	JOB	SHEET NO.
			762

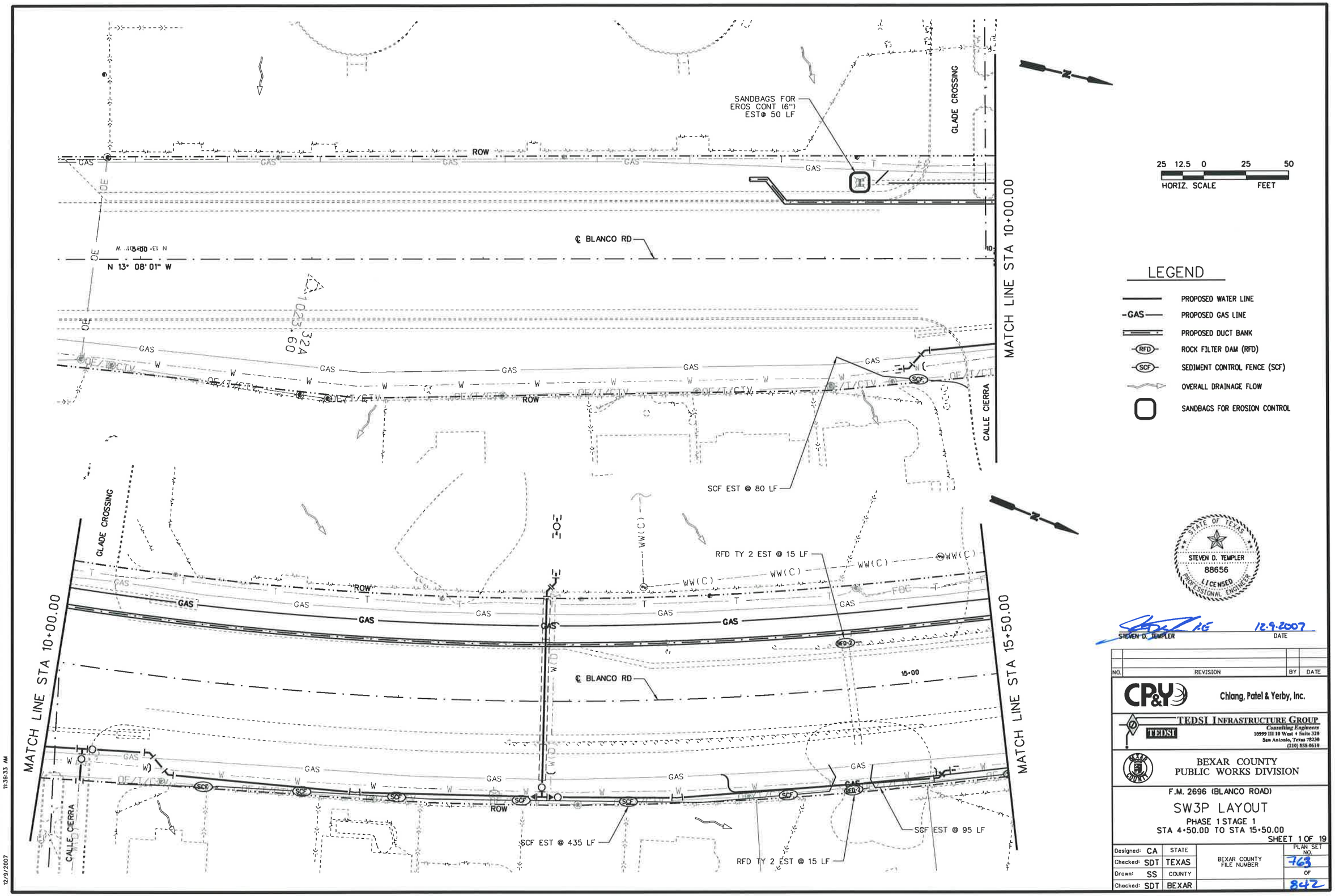
SANDBAGS FOR EROS CONT (6") EST@ 50 LF
GLADE CROSSING
ROW
GAS
℄ BLANCO RD
N 13° 08' 01" W
MATCH LINE STA 10+00.00
CALLE CIERRA
SCF EST @ 80 LF
RFD TY 2 EST @ 15 LF
WW(C)
FBC
RFD-2
15+00
MATCH LINE STA 15+50.00
SCF EST @ 435 LF
SCF EST @ 95 LF
25 12.5 0 25 50
HORIZ. SCALE FEET
LEGEND
PROPOSED WATER LINE
PROPOSED GAS LINE
PROPOSED DUCT BANK
ROCK FILTER DAM (RFD)
SEDIMENT CONTROL FENCE (SCF)
OVERALL DRAINAGE FLOW
SANDBAGS FOR EROSION CONTROL
STATE OF TEXAS
STEVEN D. TEMPLER
88656
LICENSED
PROFESSIONAL ENGINEER
STEVEN D. TEMPLER
12-9-2007
DATE
NO. REVISION BY DATE
CP&Y Chiang, Patel & Yerby, Inc.
TEDSI INFRASTRUCTURE GROUP
Consulting Engineers
10999 IH 10 West • Suite 320
San Antonio, Texas 78230
(210) 858-0610
BEXAR COUNTY
PUBLIC WORKS DIVISION
F.M. 2696 (BLANCO ROAD)
SW3P LAYOUT
PHASE 1 STAGE 1
STA 4+50.00 TO STA 15+50.00
SHEET 1 OF 19
Designed: CA
Checked: SDT
Drawn: SS
Checked: SDT
STATE TEXAS
COUNTY BEXAR
BEXAR COUNTY FILE NUMBER
PLAN SET NO. 763
OF 842
P:\2007\27958-1 Blanco Rd South\DESIGN\CS\ENVIRONMENTAL\Phase I\Phase 1\Stage 1\61027SSW3PUTIL_P1_S1-01.DGN
12/9/2007 11:36:33 AM

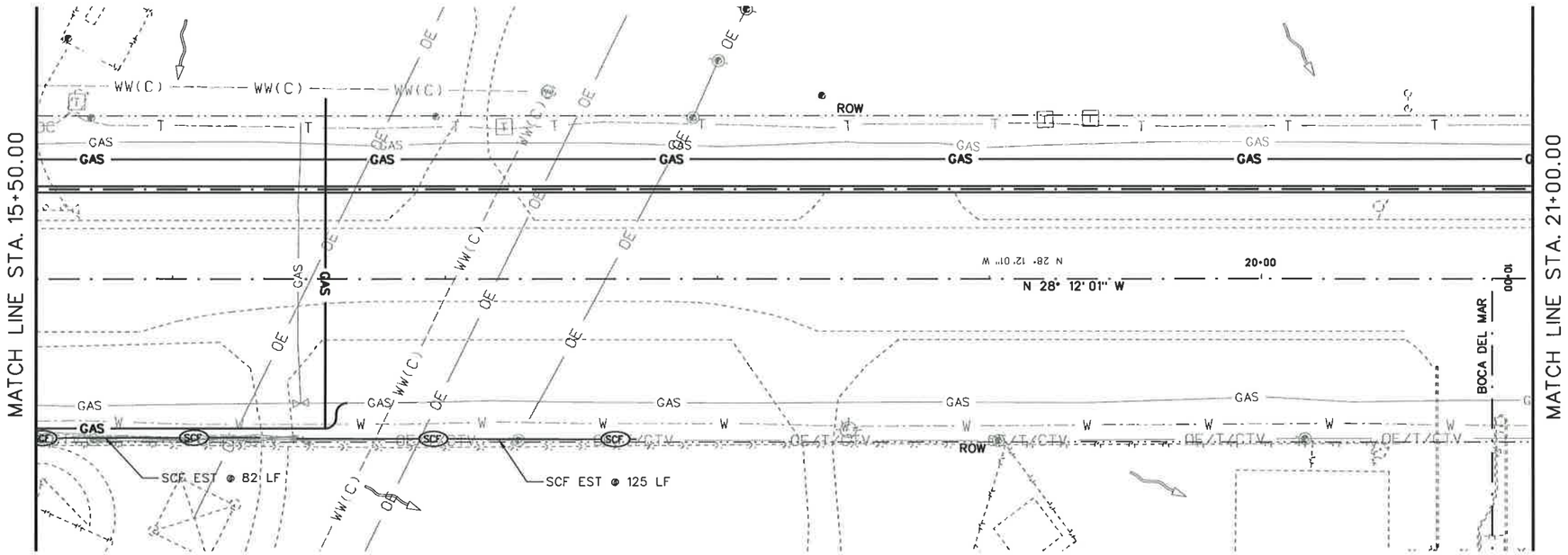

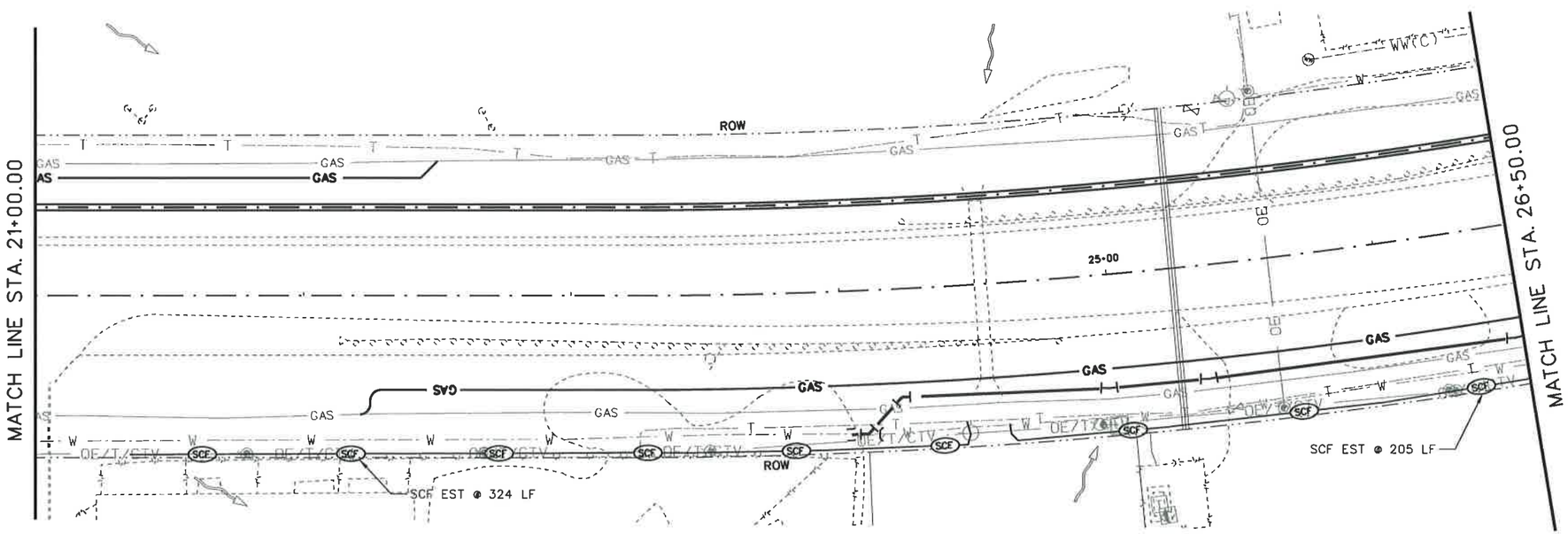

25 12.5 0 25 50
HORIZ. SCALE FEET

LEGEND

- PROPOSED WATER LINE
- PROPOSED GAS LINE
- PROPOSED DUCT BANK
- ROCK FILTER DAM (RFD)
- SEDIMENT CONTROL FENCE (SCF)
- OVERALL DRAINAGE FLOW
- SANDBAGS FOR EROSION CONTROL

STATE OF TEXAS
STEVEN D. TEMPLER
88656
LICENSED
PROFESSIONAL ENGINEER

STEVEN D. TEMPLER P.E. 12-9-2007
STEVEN D. TEMPLER DATE

NO.	REVISION	BY	DATE

CP&Y Chiang, Patel & Yerby, Inc.

TEDSI INFRASTRUCTURE GROUP
Consulting Engineers
10999 IH 10 West • Suite 320
San Antonio, Texas 78230
(210) 858-0610

BEXAR COUNTY
PUBLIC WORKS DIVISION

F.M. 2696 (BLANCO ROAD)

SW3P LAYOUT

PHASE 1 STAGE 1
STA 15+50.00 TO STA 26+50.00
SHEET 2 OF 19

Designed: CA	STATE	BEXAR COUNTY FILE NUMBER	PLAN SET NO.
Checked: SDT	TEXAS		76A
Drawn: SS	COUNTY		OF
Checked: SDT	BEXAR		342

p:\2007\27958-1 blanco rd south\design\cs\ENVIRONMENTAL\Phase 1\Stage 1\6102TSSW3PUTIL_P1_S1-02.dgn
12/9/2007 11:20:59 AM

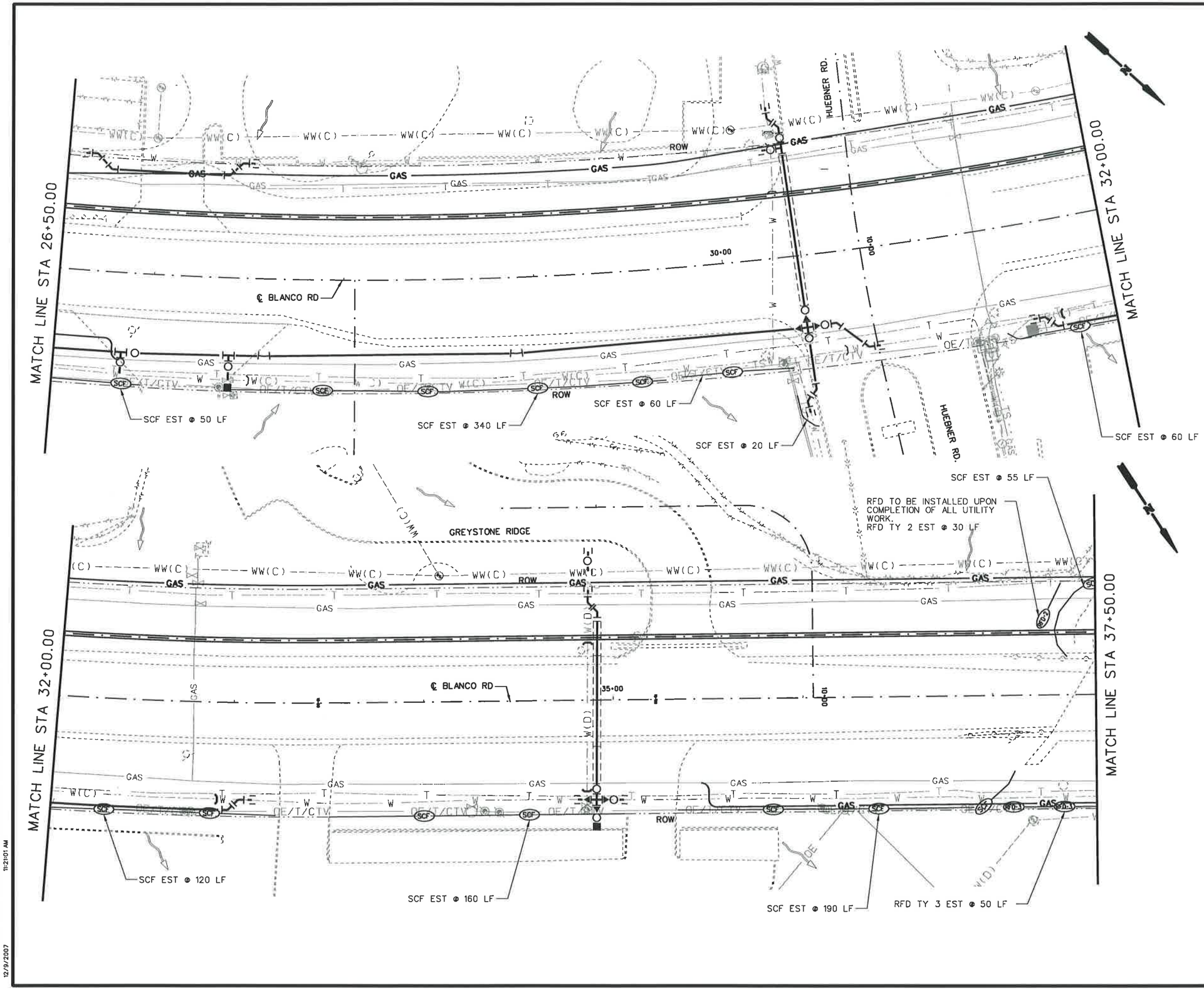

25 12.5 0 25 50
HORIZ. SCALE FEET

LEGEND

- PROPOSED WATER LINE
- PROPOSED GAS LINE
- PROPOSED DUCT BANK
- ROCK FILTER DAM (RFD)
- SEDIMENT CONTROL FENCE (SCF)
- OVERALL DRAINAGE FLOW
- SANDBAGS FOR EROSION CONTROL

STATE OF TEXAS
STEVEN D. TEMPLER
88656
LICENSED
PROFESSIONAL ENGINEER

STEVEN D. TEMPLER P.E. 12-9-2007
STEVEN D. TEMPLER DATE

NO.	REVISION	BY	DATE

CP&Y Chiang, Patel & Yerby, Inc.

TEDSI INFRASTRUCTURE GROUP
Consulting Engineers
10999 IH 10 West • Suite 320
San Antonio, Texas 78230
(210) 858-0610

BEXAR COUNTY
PUBLIC WORKS DIVISION

F.M. 2696 (BLANCO ROAD)

SW3P LAYOUT

PHASE 1 STAGE 1
STA 26+50.00 TO STA 37+50.00

SHEET 3 OF 19

Designed: CA	STATE	BEXAR COUNTY FILE NUMBER	PLAN SET NO.
Checked: SDT	TEXAS		763
Drawn: SS	COUNTY		OF
Checked: SDT	BEXAR		842

p:\2007\27958-1 blanco rd south\design\csj\ENVIRONMENTAL\Phase I\Phase I Stage I\61027SSW3PUTIL_P1_S1-03.dgn
12/9/2007 11:21:01 AM

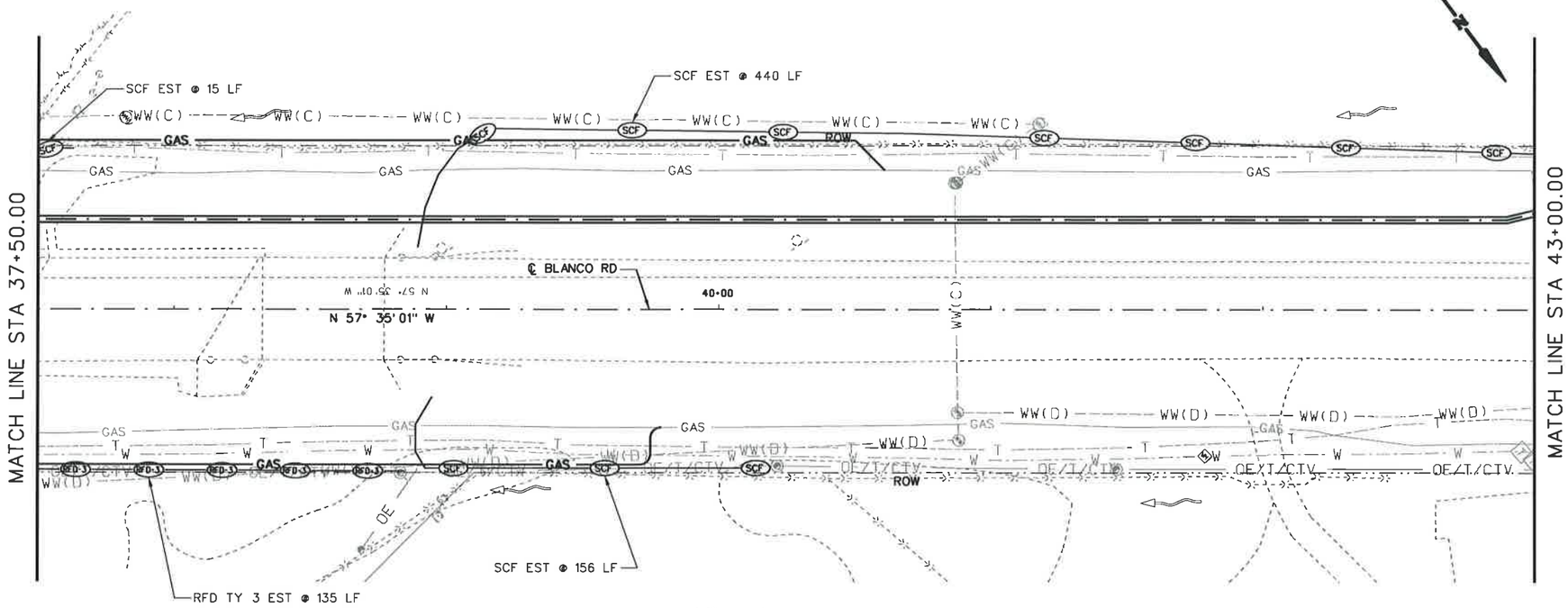

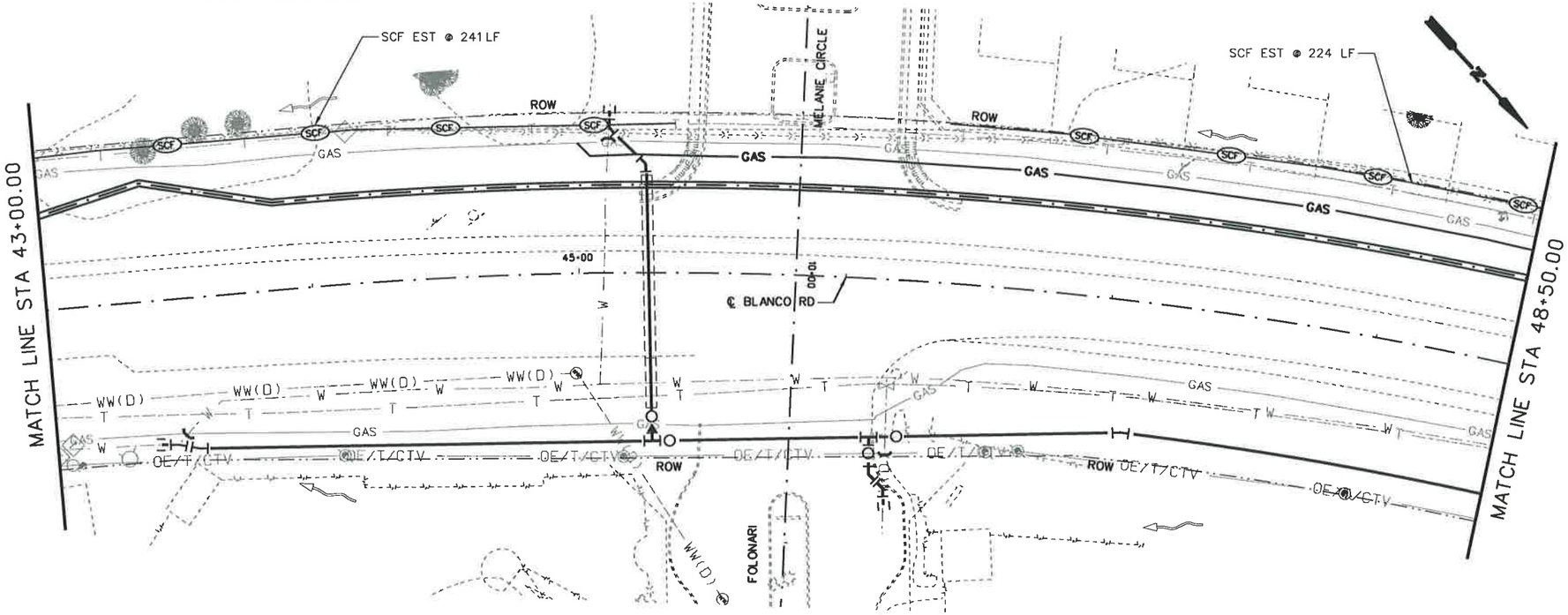

25 12.5 0 25 50
HORIZ. SCALE FEET

LEGEND

- PROPOSED WATER LINE
- PROPOSED GAS LINE
- PROPOSED DUCT BANK
- ROCK FILTER DAM (RFD)
- SEDIMENT CONTROL FENCE (SCF)
- OVERALL DRAINAGE FLOW
- SANDBAGS FOR EROSION CONTROL

STATE OF TEXAS
STEVEN D. TEMPLER
88656
LICENSED
PROFESSIONAL ENGINEER

STEVEN D. TEMPLER — DATE 12-9-2007

NO.	REVISION	BY	DATE

CP&Y Chiang, Patel & Yerby, Inc.

TEDSI INFRASTRUCTURE GROUP
Consulting Engineers
10999 IH 10 West • Suite 320
San Antonio, Texas 78230
(210) 858-0610

BEXAR COUNTY
PUBLIC WORKS DIVISION

F.M. 2696 (BLANCO ROAD)

SW3P LAYOUT

PHASE 1 STAGE 1
STA 37+50.00 TO STA 48+50.00
SHEET 4 OF 19

Designed: CA	STATE	BEXAR COUNTY FILE NUMBER	PLAN SET NO.
Checked: SDT	TEXAS		766
Drawn: SS	COUNTY		OF
Checked: SDT	BEXAR		842

p:\2007\27958-1 blanco rd south\design\cs\ENVIRONMENTAL\Phase I\Phase I Stage I\61027SSW3PUTIL_PLS1-04.DGN
12/9/2007 11:21:03 AM

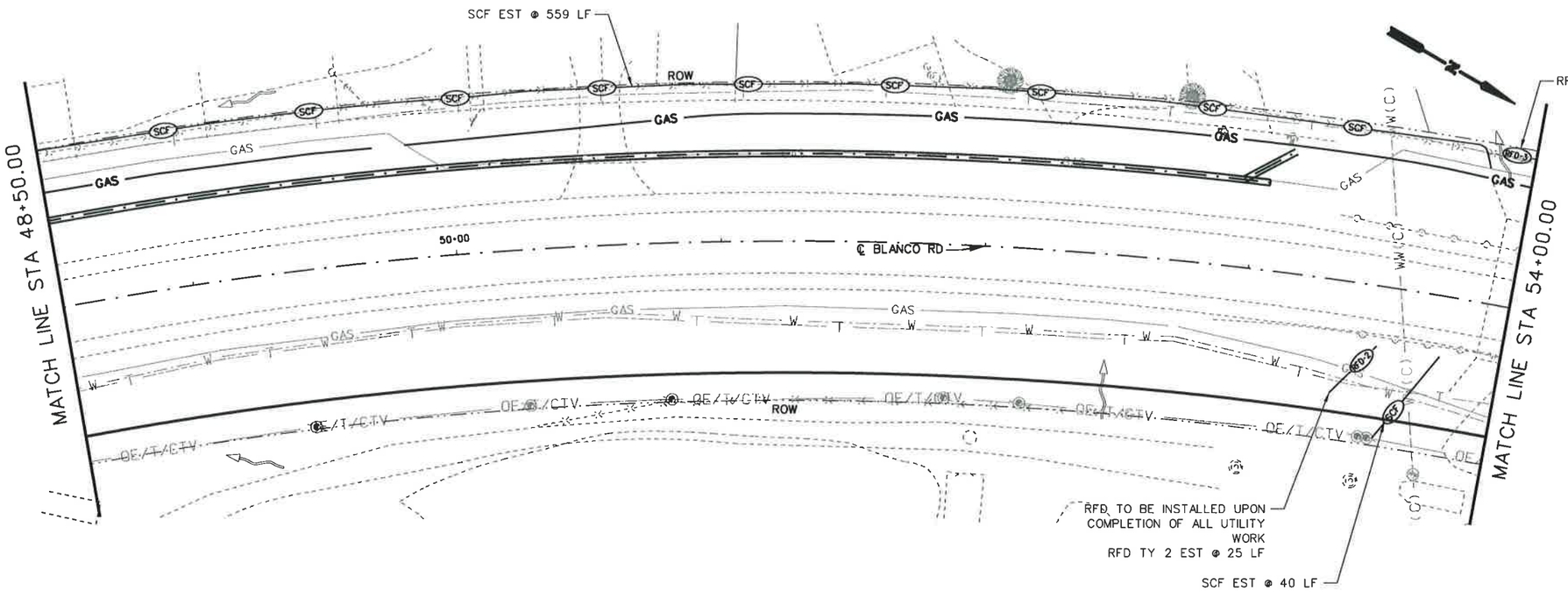

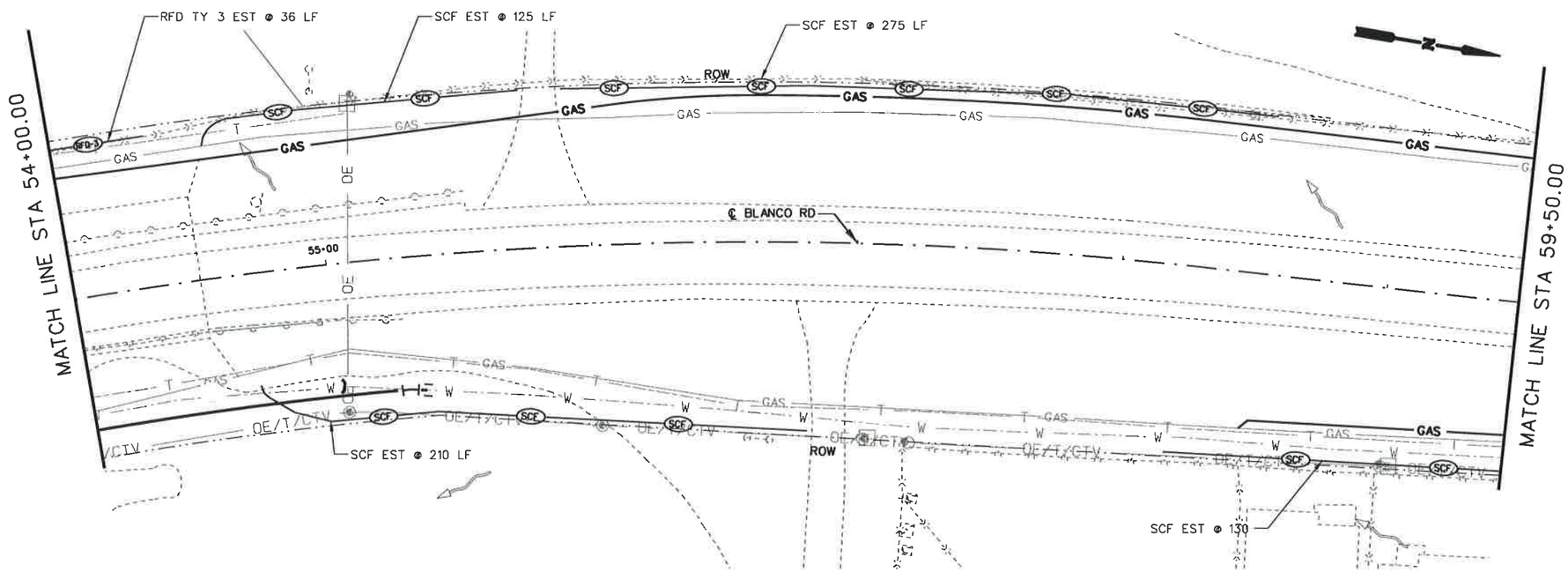

25 12.5 0 25 50
HORIZ. SCALE FEET

LEGEND

- PROPOSED WATER LINE
- PROPOSED GAS LINE
- PROPOSED DUCT BANK
- ROCK FILTER DAM (RFD)
- SEDIMENT CONTROL FENCE (SCF)
- OVERALL DRAINAGE FLOW
- SANDBAGS FOR EROSION CONTROL

STATE OF TEXAS
STEVEN D. TEMPLER
88656
LICENSED
PROFESSIONAL ENGINEER

STEVEN D. TEMPLER P.E. 12-9-2007
DATE

NO.	REVISION	BY	DATE

CP&Y Chiang, Patel & Yerby, Inc.

TEDSI INFRASTRUCTURE GROUP
Consulting Engineers
10999 IH 10 West • Suite 320
San Antonio, Texas 78230
(210) 858-0610

BEXAR COUNTY
PUBLIC WORKS DIVISION

F.M. 2696 (BLANCO ROAD)

SW3P LAYOUT

PHASE 1 STAGE 1
STA 50+74.00 TO STA 59+50.00

SHEET 5 OF 19

Designed: CA	STATE	BEXAR COUNTY FILE NUMBER	PLAN SET NO.
Checked: SDT	TEXAS		767
Drawn: SS	COUNTY		OF
Checked: SDT	BEXAR		842

p:\2007\27958-1 blanco rd south\design\cs\ENVIRONMENTAL\Phase I\Phase I Stage I\6102TSW3PUTIL_P1_S1-05.dgn
12/9/2007 11:21:04 AM

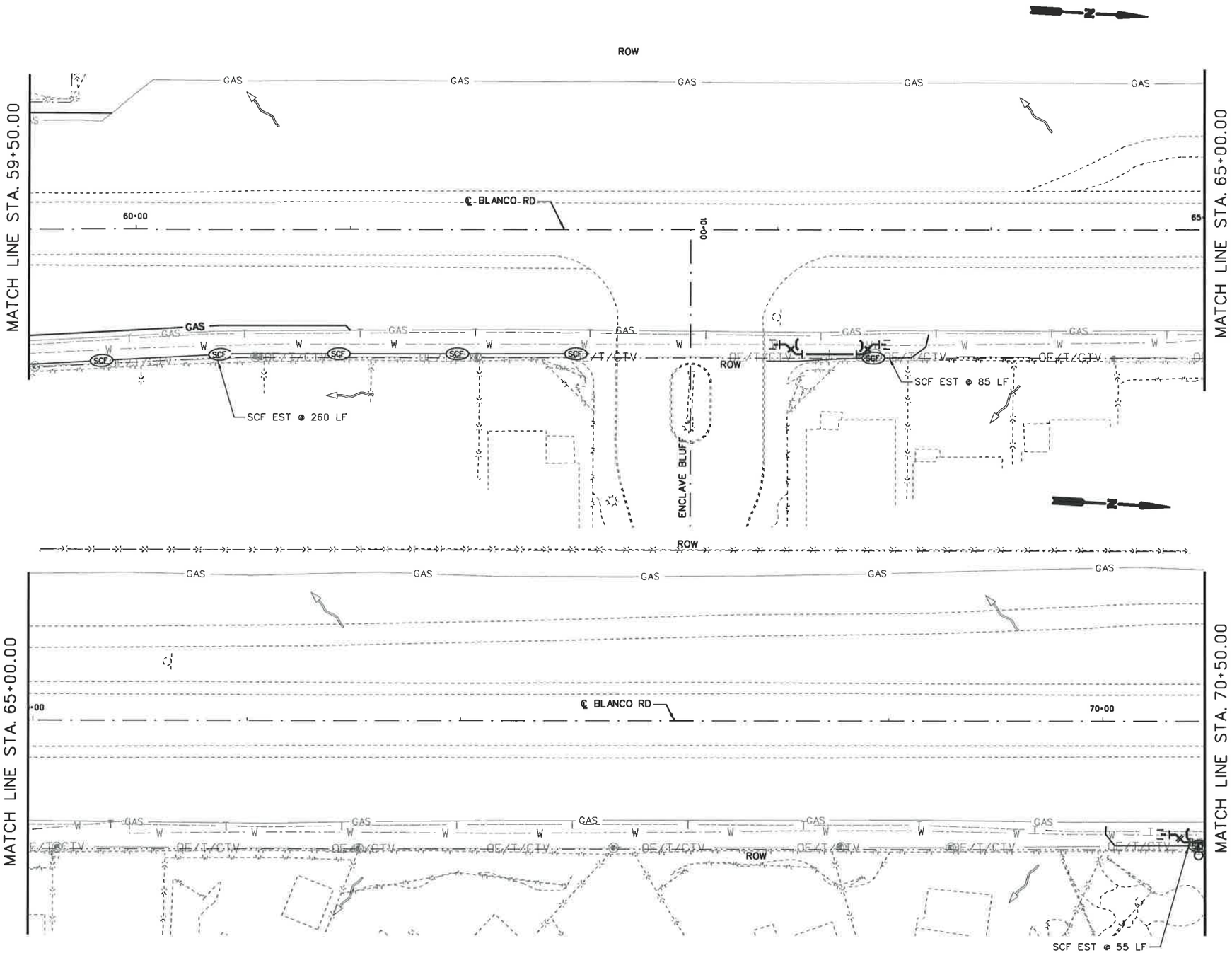

25 12.5 0 25 50
HORIZ. SCALE FEET

LEGEND

- PROPOSED WATER LINE
- GAS — PROPOSED GAS LINE
- PROPOSED DUCT BANK
- RFD — ROCK FILTER DAM (RFD)
- SCF — SEDIMENT CONTROL FENCE (SCF)
- OVERALL DRAINAGE FLOW
- SANDBAGS FOR EROSION CONTROL

STATE OF TEXAS
STEVEN D. TEMPLER
88656
LICENSED
PROFESSIONAL ENGINEER

STEVEN D. TEMPLER — DATE 12-9-2007

NO.	REVISION	BY	DATE

CP&Y Chiang, Patel & Yerby, Inc.

TEDSI INFRASTRUCTURE GROUP
Consulting Engineers
10999 IH 10 West • Suite 320
San Antonio, Texas 78230
(210) 858-0610

BEXAR COUNTY
PUBLIC WORKS DIVISION

F.M. 2696 (BLANCO ROAD)

SW3P LAYOUT
PHASE 1 STAGE 1
STA 59+50.00 TO STA 70+50.00

SHEET 6 OF 19

Designed: CA	STATE	BEXAR COUNTY FILE NUMBER	PLAN SET NO.
Checked: SDT	TEXAS		768
Drawn: SS	COUNTY		OF
Checked: SDT	BEXAR		842

p:\2007\27958-1 blanco rd south\design\cad\ENVIRONMENTAL\Phase 1\Phase 1 Stage 1\6102TSSW3PUTIL_P1_S1-06.dgn
12/9/2007 11:21:07 AM

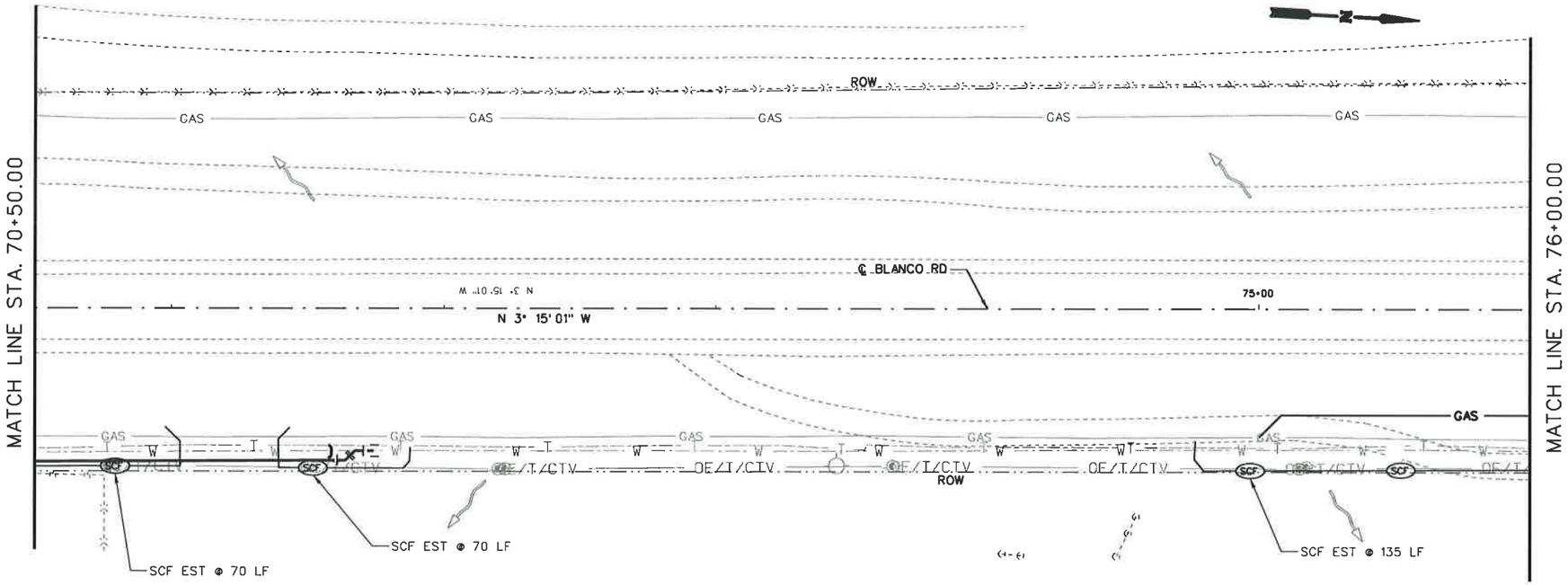

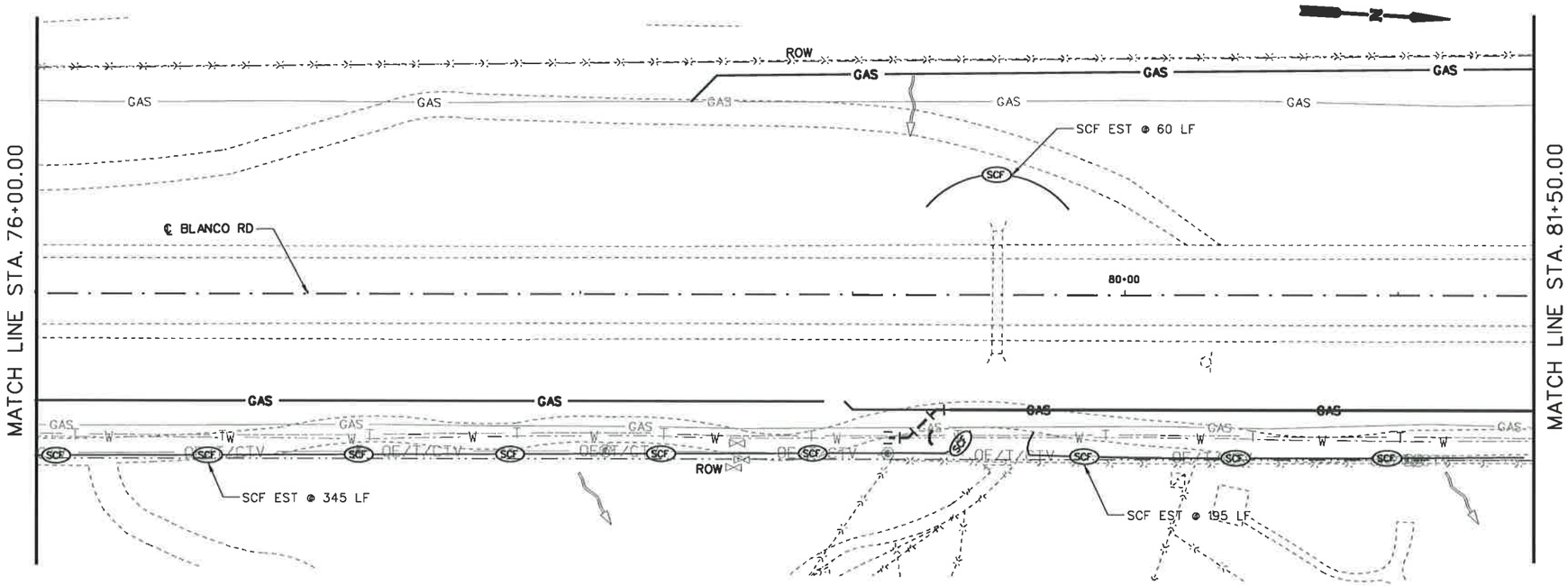

25 12.5 0 25 50
HORIZ. SCALE FEET

LEGEND

- PROPOSED WATER LINE
- GAS — PROPOSED GAS LINE
- PROPOSED DUCT BANK
- RFD — ROCK FILTER DAM (RFD)
- SCF — SEDIMENT CONTROL FENCE (SCF)
- OVERALL DRAINAGE FLOW
- SANDBAGS FOR EROSION CONTROL

STATE OF TEXAS
STEVEN D. TEMPLER
88656
LICENSED
PROFESSIONAL ENGINEER

STEVEN D. TEMPLER P.E. 12-9-2007
DATE

NO.	REVISION	BY	DATE

CP&Y Chiang, Patel & Yerby, Inc.

TEDSI INFRASTRUCTURE GROUP
Consulting Engineers
10999 IH 10 West # Suite 320
San Antonio, Texas 78230
(210) 858-0610

BEXAR COUNTY
PUBLIC WORKS DIVISION

F.M. 2696 (BLANCO ROAD)

SW3P LAYOUT
PHASE 1 STAGE 1
STA 70+50.00 TO STA 81+50.00

SHEET 7 OF 19

Designed: CA	STATE	BEXAR COUNTY FILE NUMBER	PLAN SET NO.
Checked: SDT	TEXAS		769
Drawn: SS	COUNTY		OF
Checked: SDT	BEXAR		842

p:\2007\27958-1 blanco rd south\design\cs\ENVIRONMENTAL\Phase I\Phase I Stage I\6102TSSW3PUTL_P1_S1-07.dgn
12/9/2007 11:21:08 AM

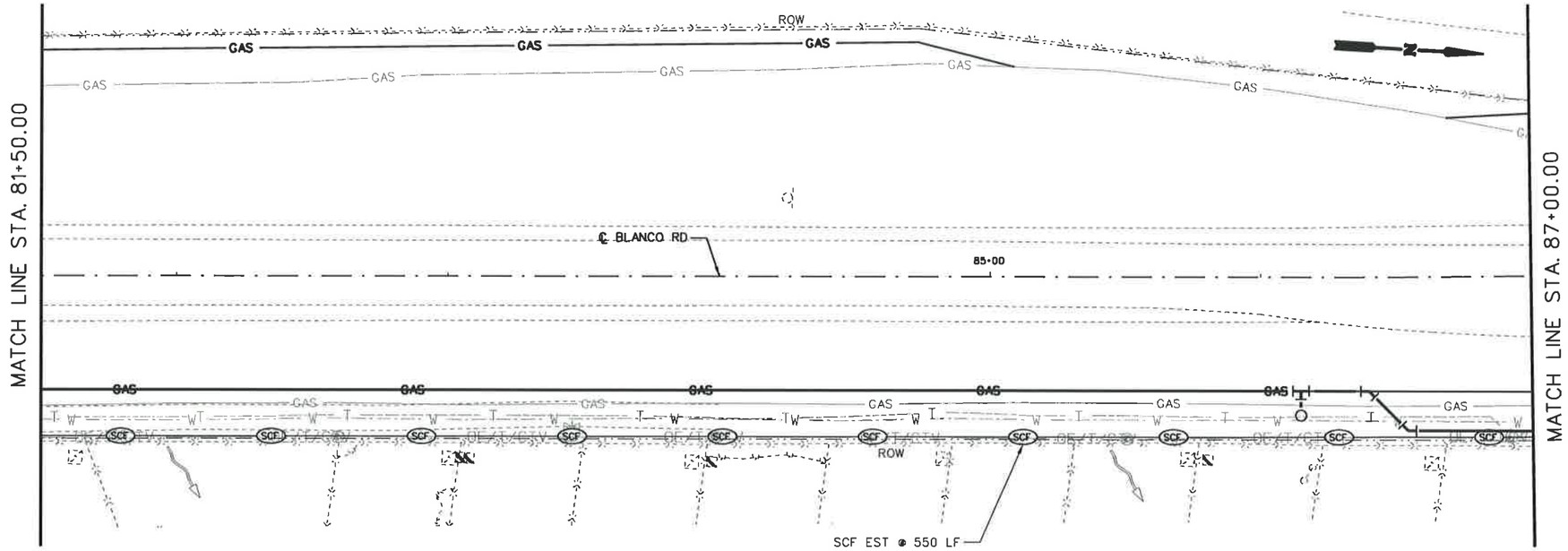

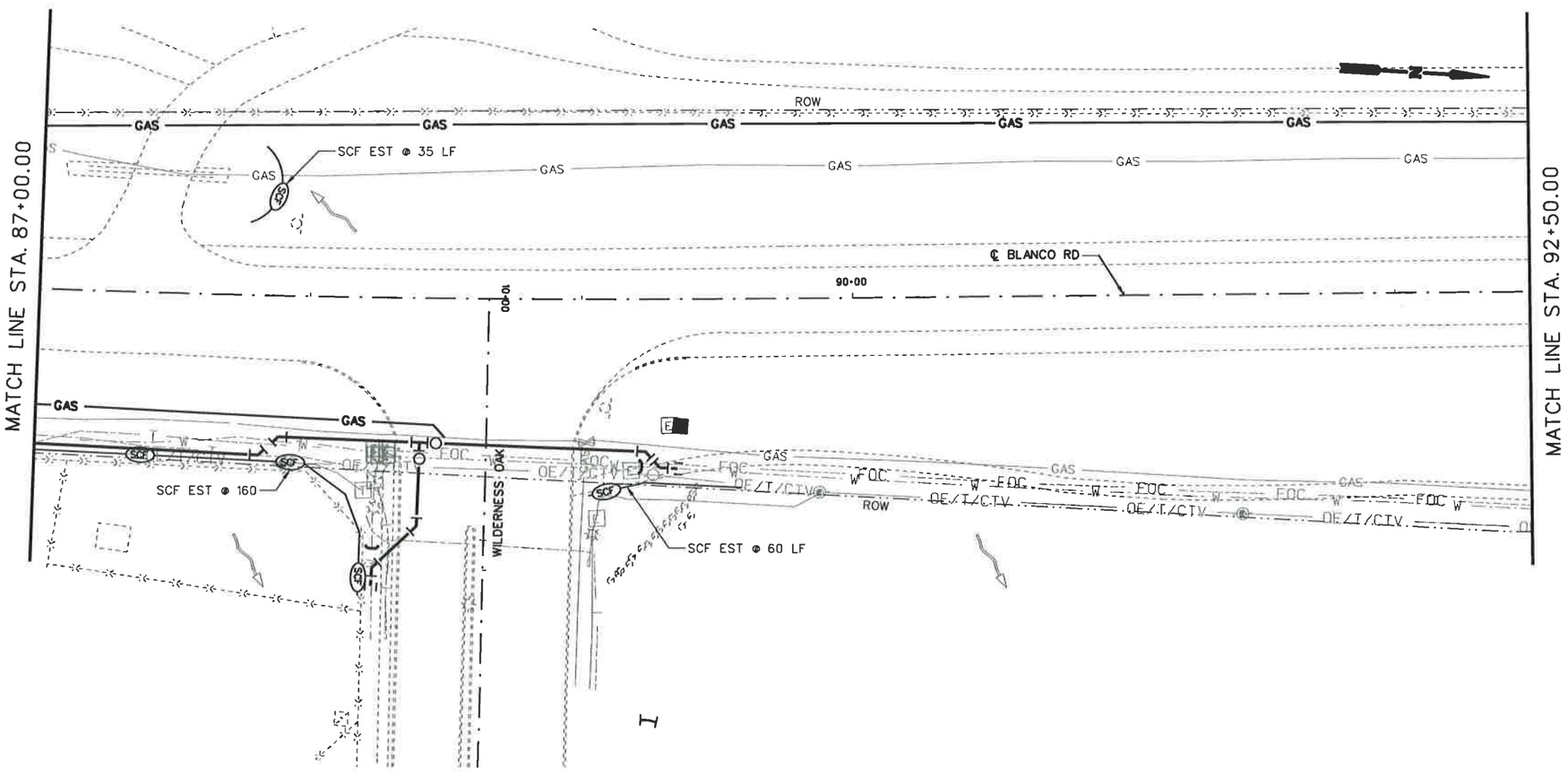

25 12.5 0 25 50
HORIZ. SCALE FEET

LEGEND

- PROPOSED WATER LINE
- PROPOSED GAS LINE
- PROPOSED DUCT BANK
- ROCK FILTER DAM (RFD)
- SEDIMENT CONTROL FENCE (SCF)
- OVERALL DRAINAGE FLOW
- SANDBAGS FOR EROSION CONTROL

STATE OF TEXAS
STEVEN D. TEMPLER
88656
LICENSED
PROFESSIONAL ENGINEER

STEVEN D. TEMPLER P.E. 12-7-2007
DATE

NO.	REVISION	BY	DATE

CP&Y Chiang, Patel & Yerby, Inc.

TEDSI INFRASTRUCTURE GROUP
Consulting Engineers
10999 IH 10 West • Suite 320
San Antonio, Texas 78230
(210) 858-0610

BEXAR COUNTY
PUBLIC WORKS DIVISION

F.M. 2696 (BLANCO ROAD)

SW3P LAYOUT

PHASE 1 STAGE 1
STA 81+50.00 TO STA 92+50.00

SHEET 8 OF 19

Designed: CA	STATE	BEXAR COUNTY FILE NUMBER	PLAN SET NO.
Checked: SDT	TEXAS		770
Drawn: SS	COUNTY		OF
Checked: SDT	BEXAR		842

p:\2007\27958-1 blanco rd south\design\csj\ENVIRONMENTAL\Phase 1\Phase 1Stage 1\6192TSSW3PUTIL_P1_S1-08.dgn
12/9/2007 11:21:10 AM

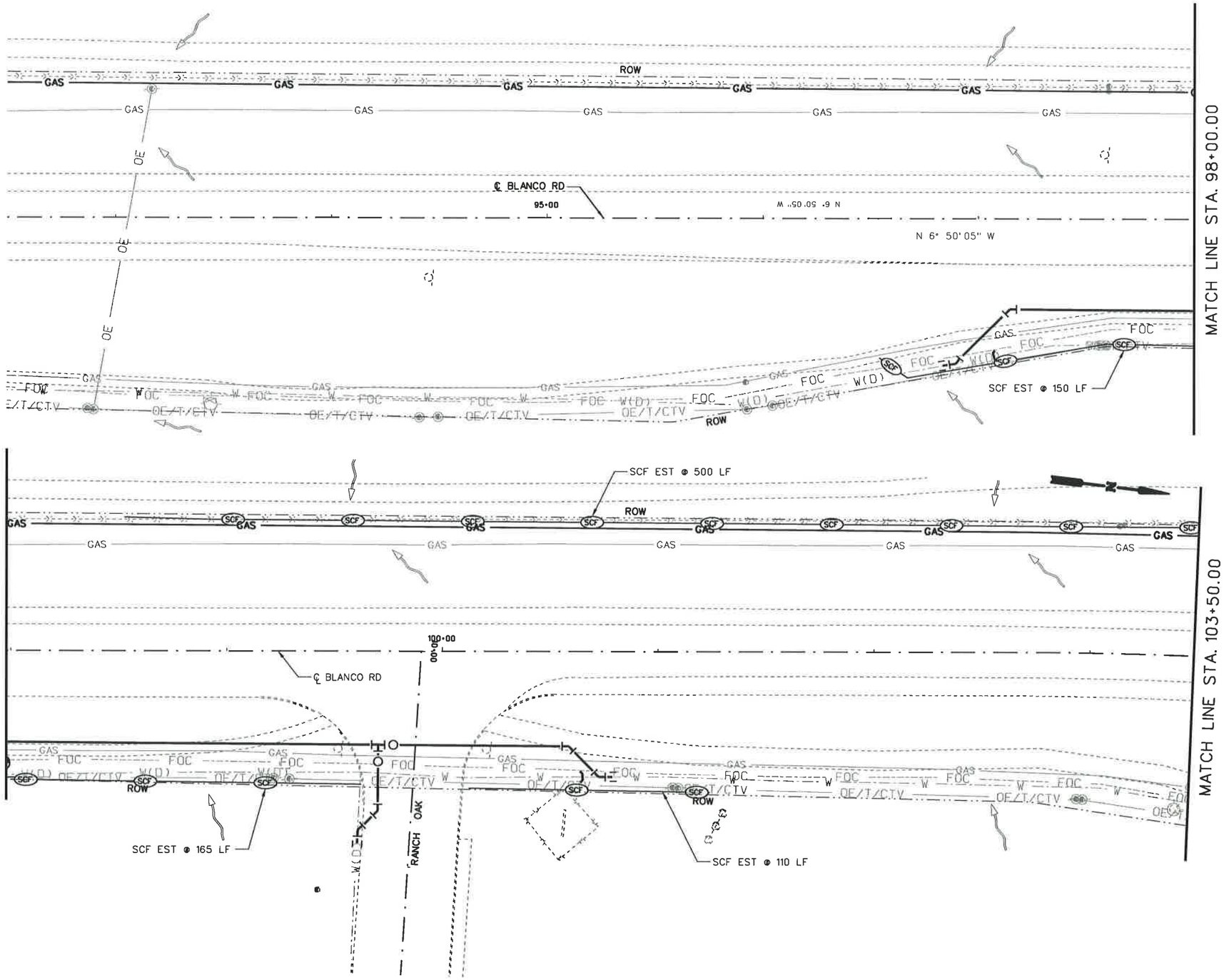

25 12.5 0 25 50
HORIZ. SCALE FEET

LEGEND

- PROPOSED WATER LINE
- PROPOSED GAS LINE
- PROPOSED DUCT BANK
- ROCK FILTER DAM (RFD)
- SEDIMENT CONTROL FENCE (SCF)
- OVERALL DRAINAGE FLOW
- SANDBAGS FOR EROSION CONTROL

STATE OF TEXAS
STEVEN D. TEMPLER
88656
LICENSED
PROFESSIONAL ENGINEER

STEVEN D. TEMPLER — DATE 12-9-2007

NO.	REVISION	BY	DATE

CP&Y Chiang, Patel & Yerby, Inc.

TEDSI INFRASTRUCTURE GROUP
Consulting Engineers
10999 IH 10 West + Suite 320
San Antonio, Texas 78230
(210) 858-6610

BEXAR COUNTY
PUBLIC WORKS DIVISION

F.M. 2696 (BLANCO ROAD)

SW3P LAYOUT

PHASE 1 STAGE 1
STA 99+00.00 TO STA 103+50.00

SHEET 9 OF 19

Designed: CA	STATE	BEXAR COUNTY FILE NUMBER	PLAN SET NO
Checked: SDT	TEXAS		771
Drawn: SS	COUNTY		OF
Checked: SDT	BEXAR		842

p:\2007\27958-1 blanco rd south\design\cs\ENVIRONMENTAL\Phase 1\Phase 1 Stage 1\6102TSSW3PUTL_P1_S1-09.050
12/9/2007 11:21:11 AM

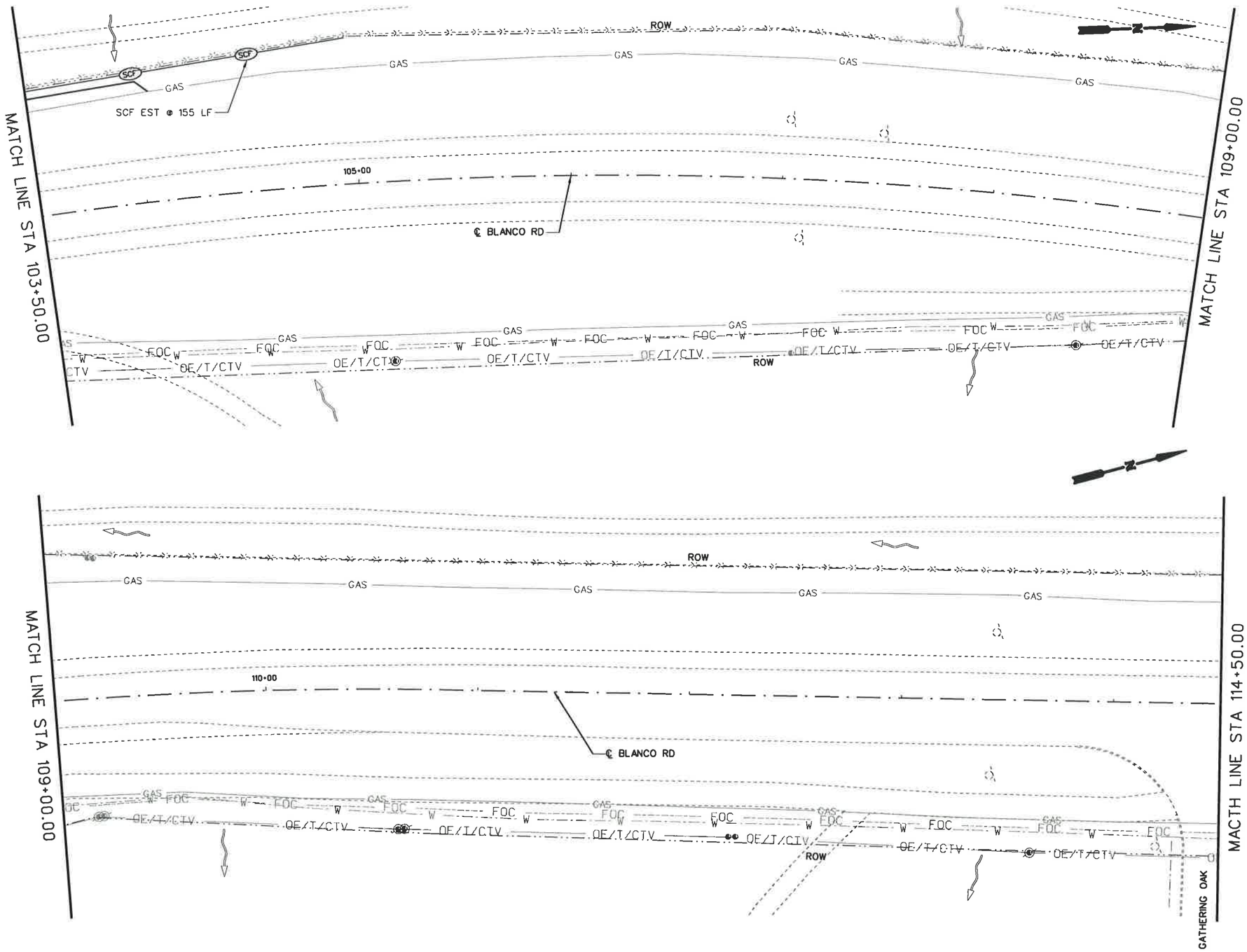

25 12.5 0 25 50
HORIZ. SCALE FEET

LEGEND

- PROPOSED WATER LINE
- GAS — PROPOSED GAS LINE
- PROPOSED DUCT BANK
- RFD — ROCK FILTER DAM (RFD)
- SCF — SEDIMENT CONTROL FENCE (SCF)
- OVERALL DRAINAGE FLOW
- SANDBAGS FOR EROSION CONTROL

STATE OF TEXAS
STEVEN D. TEMPLER
88656
LICENSED
PROFESSIONAL ENGINEER

STEVEN D. TEMPLER P.E. 12-9-2007
DATE

NO.	REVISION	BY	DATE

CP&Y Chiang, Patel & Yerby, Inc.

TEDSI INFRASTRUCTURE GROUP
Consulting Engineers
10999 IH 10 West • Suite 320
San Antonio, Texas 78230
(210) 858-0610

BEXAR COUNTY
PUBLIC WORKS DIVISION

F.M. 2696 (BLANCO ROAD)

SW3P LAYOUT

PHASE 1 STAGE 1
STA 103+50.00 TO STA 114+50.00

SHEET 10 OF 19

Designed: CA	STATE	BEXAR COUNTY FILE NUMBER	PLAN SET NO.
Checked: SDT	TEXAS		776
Drawn: SS	COUNTY		OF
Checked: SDT	BEXAR		842

p:\2007\27958-1 blanco rd south\design\csj\ENVIRONMENTAL\Phase I\Phase I Stage I\6102TSSW3PUTIL_P1_S1-10.DGN
12/9/2007 11:21:13 AM

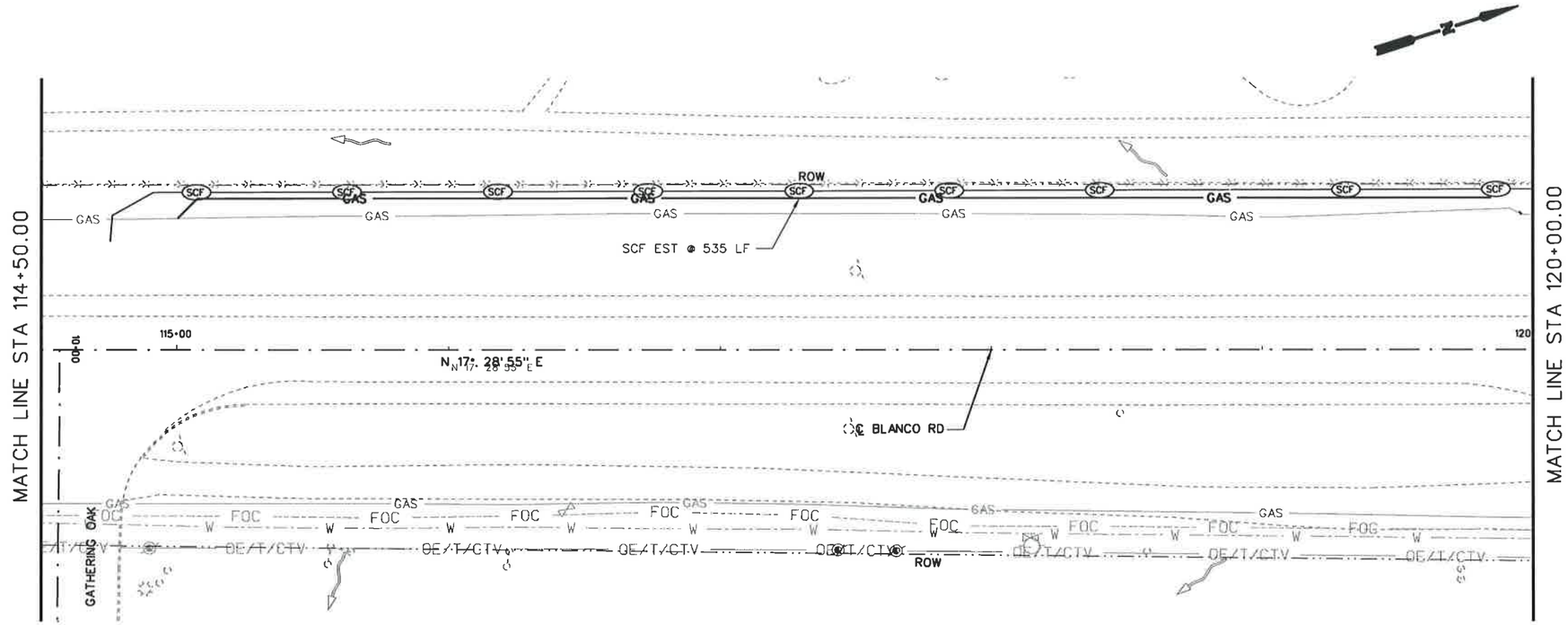

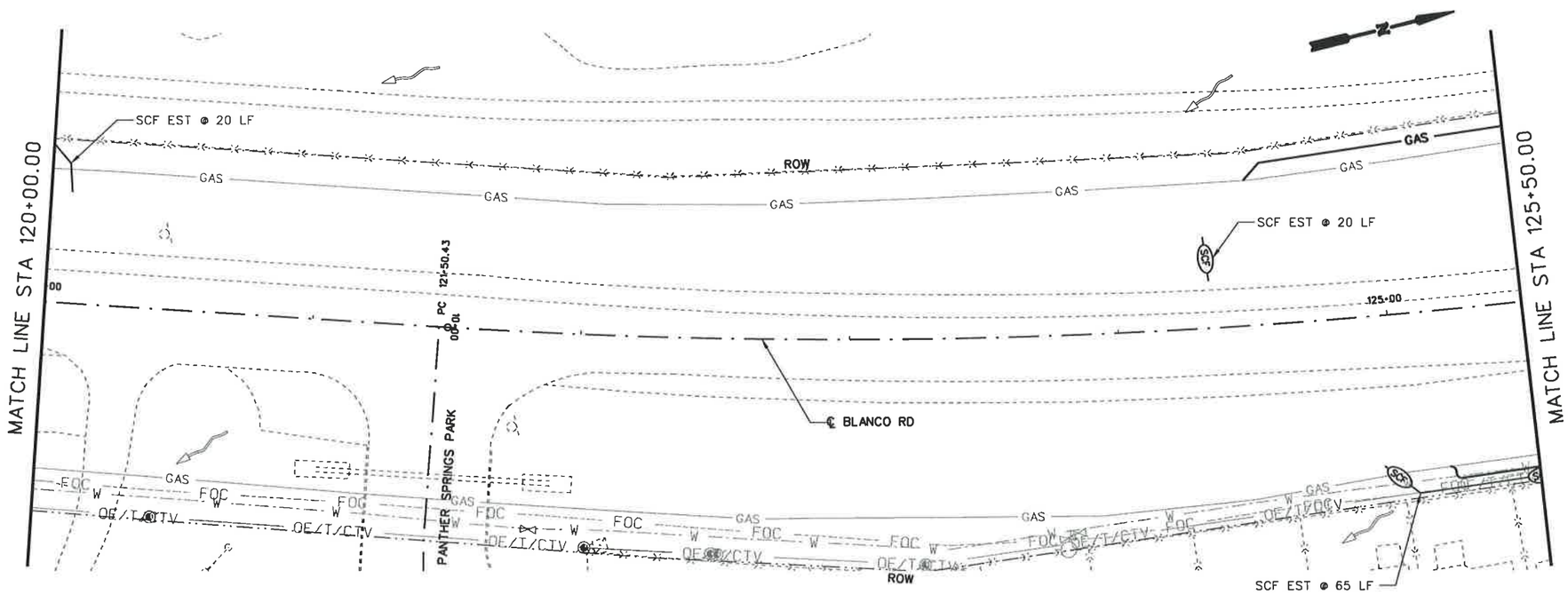

25 12.5 0 25 50
HORIZ. SCALE FEET

LEGEND

- PROPOSED WATER LINE
- GAS — PROPOSED GAS LINE
- PROPOSED DUCT BANK
- RFD — ROCK FILTER DAM (RFD)
- SCF — SEDIMENT CONTROL FENCE (SCF)
- OVERALL DRAINAGE FLOW
- SANDBAGS FOR EROSION CONTROL

STATE OF TEXAS
STEVEN D. TEMPLER
88656
LICENSED
PROFESSIONAL ENGINEER

STEVEN D. TEMPLER P.E. 12-9-2007
DATE

NO.	REVISION	BY	DATE

CP&Y Chiang, Patel & Yerby, Inc.

TEDSI INFRASTRUCTURE GROUP
Consulting Engineers
10999 IH 10 West • Suite 330
San Antonio, Texas 78230
(210) 858-8610

BEXAR COUNTY
PUBLIC WORKS DIVISION

F.M. 2696 (BLANCO ROAD)

SW3P LAYOUT

PHASE 1 STAGE 1
STA 114+50.00 TO STA 125+50.00

SHEET 11 OF 19

Designed: CA	STATE	BEXAR COUNTY FILE NUMBER	PLAN SET NO.
Checked: SDT	TEXAS		7-13
Drawn: SS	COUNTY		OF
Checked: SDT	BEXAR		8-12

p:\2007\27958-1 blanco rd south\design\cad\ENVIRONMENTAL\Phase 1\Phase 1\Stage 1\6102TSSW3PUTIL_P1_S1-11.DGN
12/9/2007 11:21:14 AM

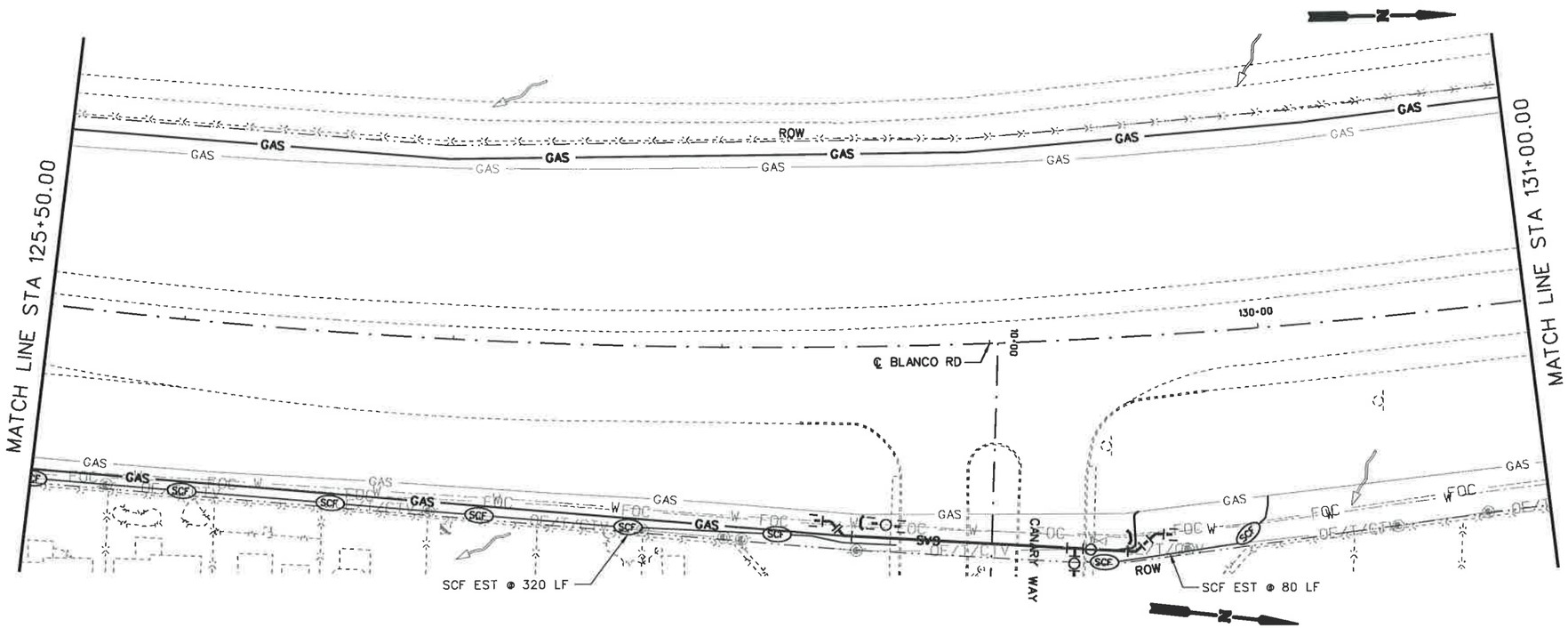

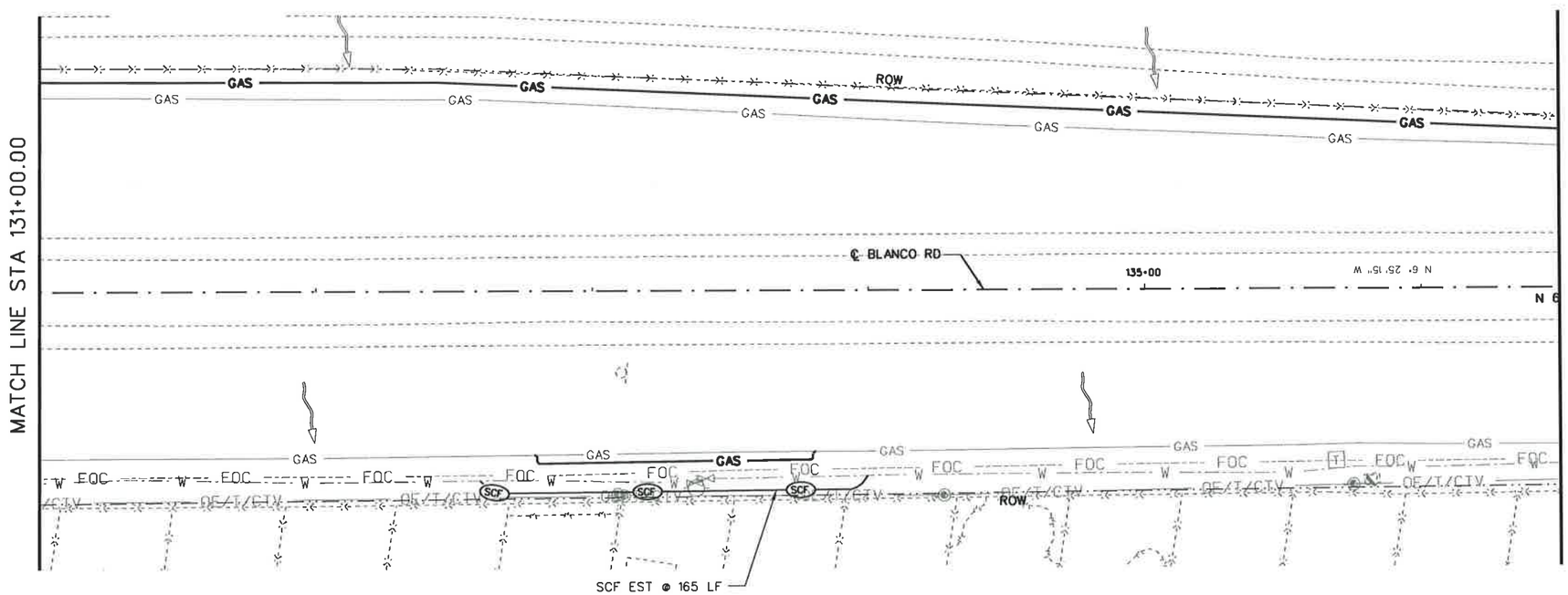

25 12.5 0 25 50
HORIZ. SCALE FEET

LEGEND

- PROPOSED WATER LINE
- GAS — PROPOSED GAS LINE
- PROPOSED DUCT BANK
- RFD — ROCK FILTER DAM (RFD)
- SCF — SEDIMENT CONTROL FENCE (SCF)
- OVERALL DRAINAGE FLOW
- SANDBAGS FOR EROSION CONTROL

STATE OF TEXAS
STEVEN D. TEMPLER
88656
LICENSED
PROFESSIONAL ENGINEER

STEVEN D. TEMPLER — DATE 12-9-2007

NO.	REVISION	BY	DATE

CP&Y Chiang, Patel & Yerby, Inc.

TEDSI INFRASTRUCTURE GROUP
Consulting Engineers
10999 IH 10 West • Suite 320
San Antonio, Texas 78230
(210) 858-0610

BEXAR COUNTY
PUBLIC WORKS DIVISION

F.M. 2696 (BLANCO ROAD)

SW3P LAYOUT

PHASE 1 STAGE 1
STA 125+50.00 TO STA 136+50.00

SHEET 12 OF 19

Designed: CA	STATE	BEXAR COUNTY FILE NUMBER	PLAN SET NO.
Checked: SDT	TEXAS		774
Drawn: SS	COUNTY		OF
Checked: SDT	BEXAR		872

p:\2007\27958-1 blanco rd south\design\cs\ENVIRONMENTAL\Phase I\Phase I Stage I\61027SSW3PUTIL_P1_S1-12.dgn
12/9/2007 11:21:16 AM

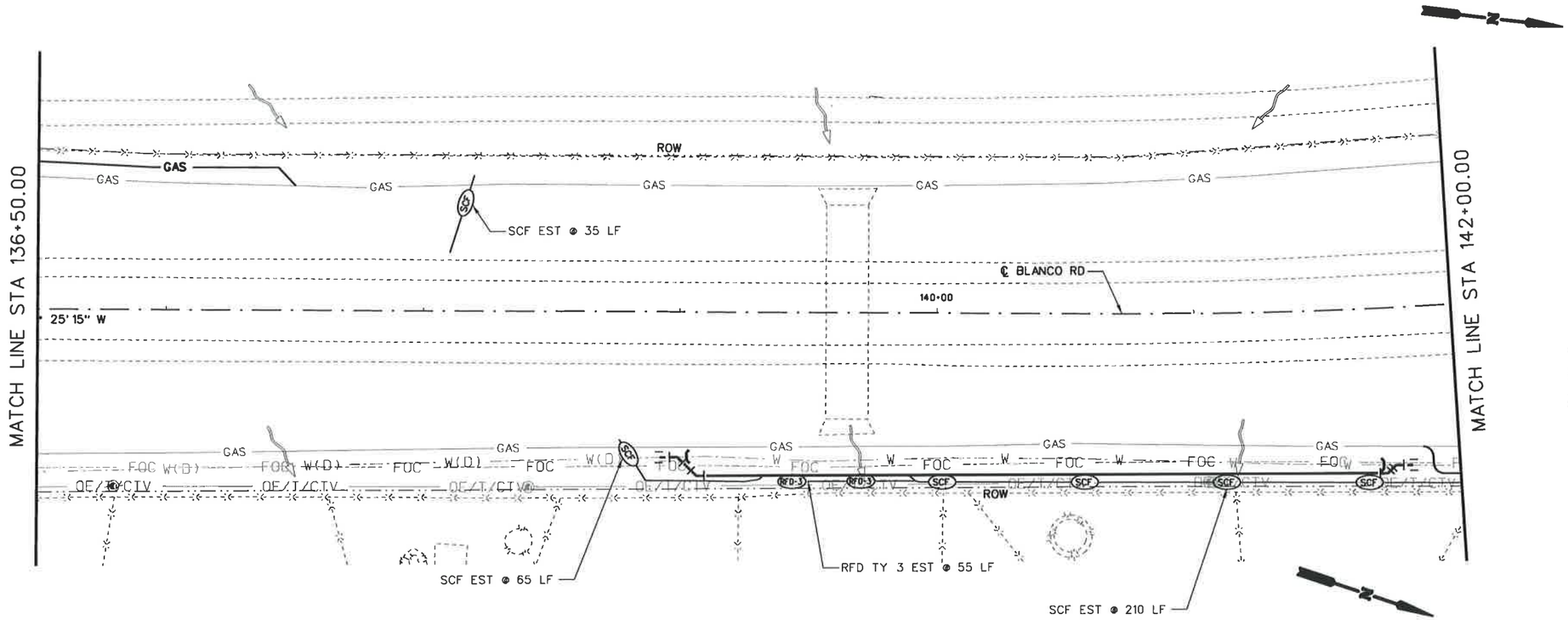

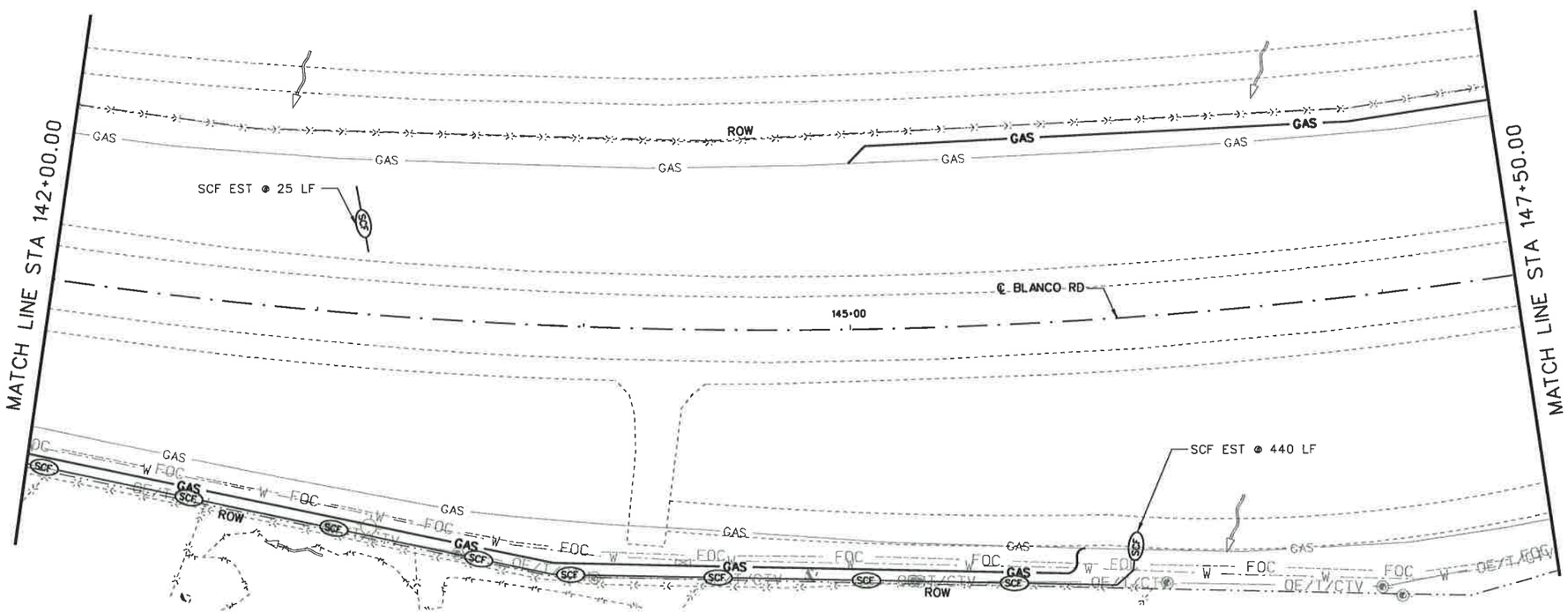

25 12.5 0 25 50
HORIZ. SCALE FEET

LEGEND

- PROPOSED WATER LINE
- -GAS- PROPOSED GAS LINE
- PROPOSED DUCT BANK
- (RFD) ROCK FILTER DAM (RFD)
- (SCF) SEDIMENT CONTROL FENCE (SCF)
- OVERALL DRAINAGE FLOW
- SANDBAGS FOR EROSION CONTROL

STATE OF TEXAS
STEVEN D. TEMPLER
88656
LICENSED
PROFESSIONAL ENGINEER

STEVEN D. TEMPLER P.E. 12-09-2007
DATE

NO.	REVISION	BY	DATE

CP&Y Chiang, Patel & Yerby, Inc.

TEDSI INFRASTRUCTURE GROUP
Consulting Engineers
10999 IH 10 West • Suite 320
San Antonio, Texas 78230
(210) 858-0610

BEXAR COUNTY
PUBLIC WORKS DIVISION

F.M. 2696 (BLANCO ROAD)

SW3P LAYOUT

PHASE 1 STAGE 1
STA 136+50.00 TO STA 147+50.00

SHEET 13 OF 19

Designed:	CA	STATE	BEXAR COUNTY FILE NUMBER	PLAN SET NO.
Checked:	SDT	TEXAS		775
Drawn:	SS	COUNTY		OF
Checked:	SDT	BEXAR		842

p:\2007\27958-1 blanco rd south\design\cs3\ENVIRONMENTAL\Phase 1\Phase 1 Stage 1\61027TSSW3PUTIL_P1_S1-13.050
12/9/2007 11:21:18 AM

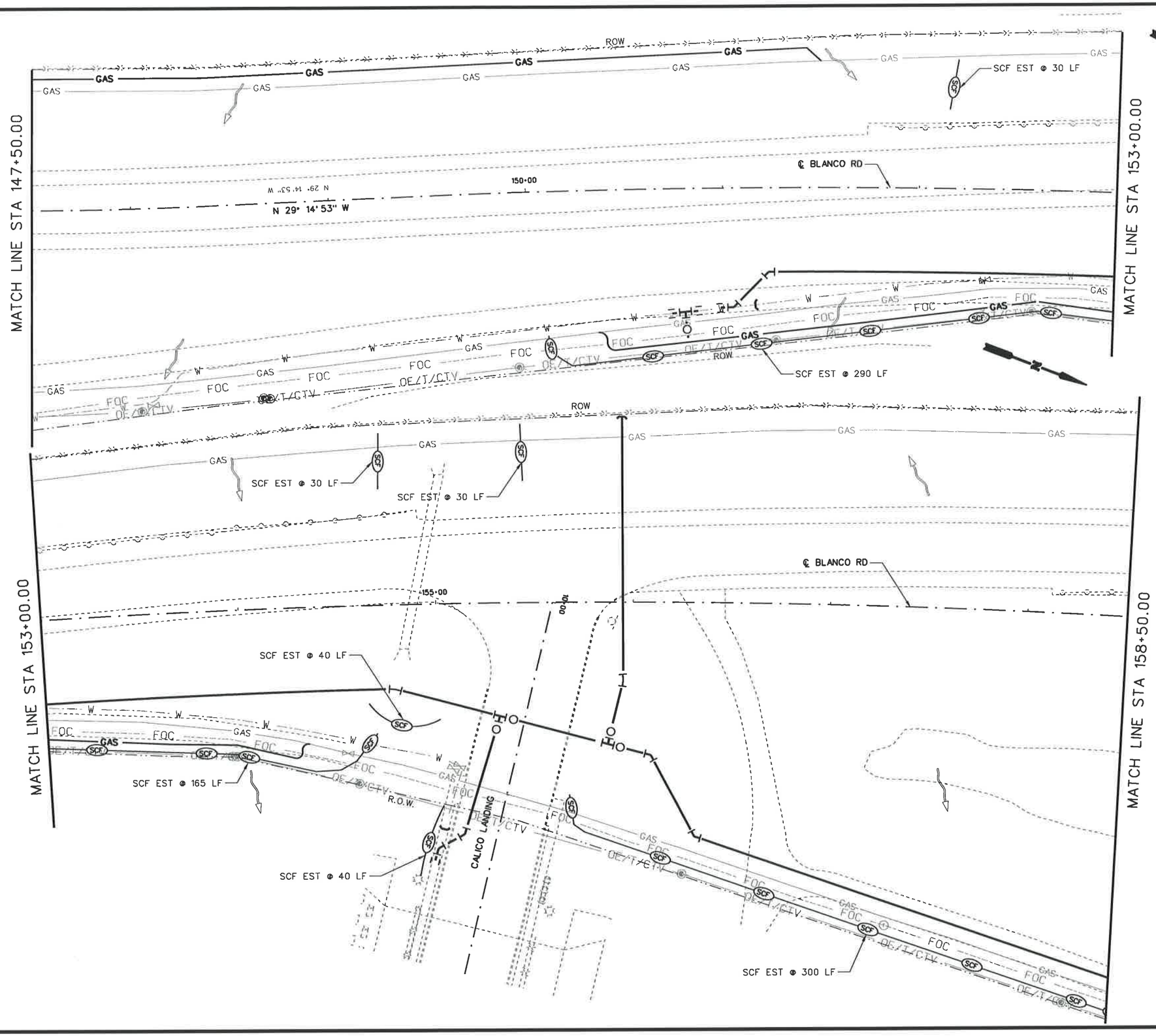

25 12.5 0 25 50
HORIZ. SCALE FEET

LEGEND

- PROPOSED WATER LINE
- GAS — PROPOSED GAS LINE
- PROPOSED DUCT BANK
- RFD — ROCK FILTER DAM (RFD)
- SCF — SEDIMENT CONTROL FENCE (SCF)
- OVERALL DRAINAGE FLOW
- SANDBAGS FOR EROSION CONTROL

STATE OF TEXAS
STEVEN D. TEMPLER
88656
LICENSED
PROFESSIONAL ENGINEER

STEVEN D. TEMPLER P.E. 12-09-2007
DATE

NO.	REVISION	BY	DATE

CP&Y Chiang, Patel & Yerby, Inc.

TEDSI INFRASTRUCTURE GROUP
Consulting Engineers
10999 IH 10 West • Suite 320
San Antonio, Texas 78230
(210) 858-8610

BEXAR COUNTY
PUBLIC WORKS DIVISION

F.M. 2696 (BLANCO ROAD)

SW3P LAYOUT

PHASE 1 STAGE 1
STA 147+50.00 TO STA 158+50.00

SHEET 14 OF 19

Designed: CA	STATE	BEXAR COUNTY FILE NUMBER	PLAN SET NO. 776
Checked: SDT	TEXAS		
Drawn: SS	COUNTY		OF
Checked: SDT	BEXAR		842

p:\2007\27958-1 blanco rd south\design\cs\ENVIRONMENTAL\Phase 1\Stage 1\61027SSW3PUTIL_PTL_S1-14.050
12/9/2007 11:21:19 AM

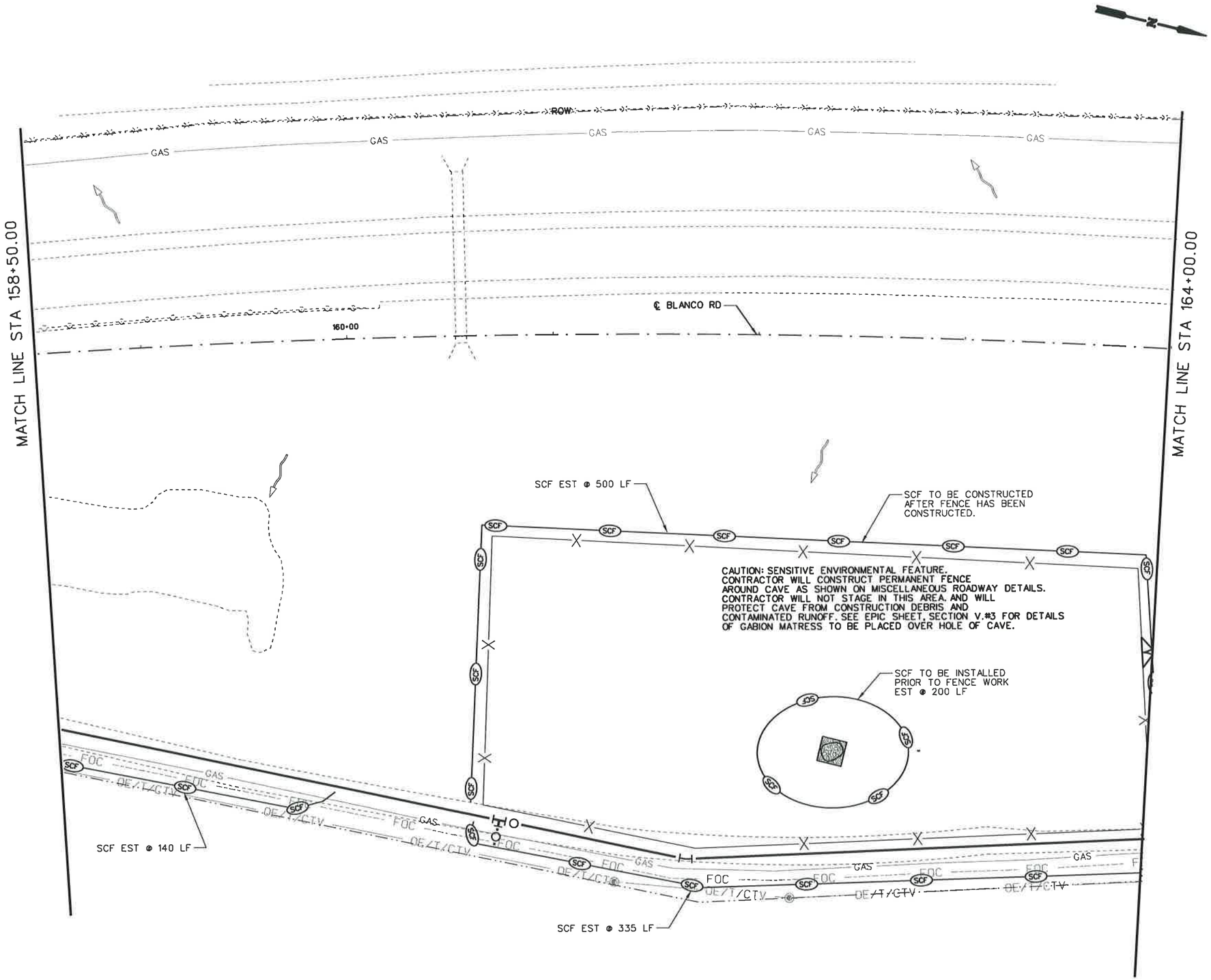

25 12.5 0 25 50
HORIZ. SCALE FEET

LEGEND

- PROPOSED WATER LINE
- GAS — PROPOSED GAS LINE
- PROPOSED DUCT BANK
- RFD — ROCK FILTER DAM (RFD)
- SCF — SEDIMENT CONTROL FENCE (SCF)
- OVERALL DRAINAGE FLOW
- SANDBAGS FOR EROSION CONTROL

STATE OF TEXAS
STEVEN D. TEMPLER
88656
LICENSED
PROFESSIONAL ENGINEER

STEVEN D. TEMPLER P.E. 12.09.2007
DATE

NO.	REVISION	BY	DATE

CP&Y Chiang, Patel & Yerby, Inc.

TEDSI INFRASTRUCTURE GROUP
Consulting Engineers
10999 IH 10 West • Suite 320
San Antonio, Texas 78230
(210) 858-8610

BEXAR COUNTY
PUBLIC WORKS DIVISION

F.M. 2696 (BLANCO ROAD)

SW3P LAYOUT

PHASE 1 STAGE 1
STA 158+50 TO STA 164+00.00

SHEET 15 OF 19

Designed: CA	STATE	BEXAR COUNTY FILE NUMBER	PLAN SET NO.
Checked: SDT	TEXAS		777
Drawn: SS	COUNTY		Or
Checked: SDT	BEXAR		842

p:\2007\27958-1 blanco rd south\design\cs3\ENVIRONMENTAL\Phase I\Phase I Stage I\6102TSSW3PUTIL_P1_S1-15.050
12/9/2007 11:21:21 AM

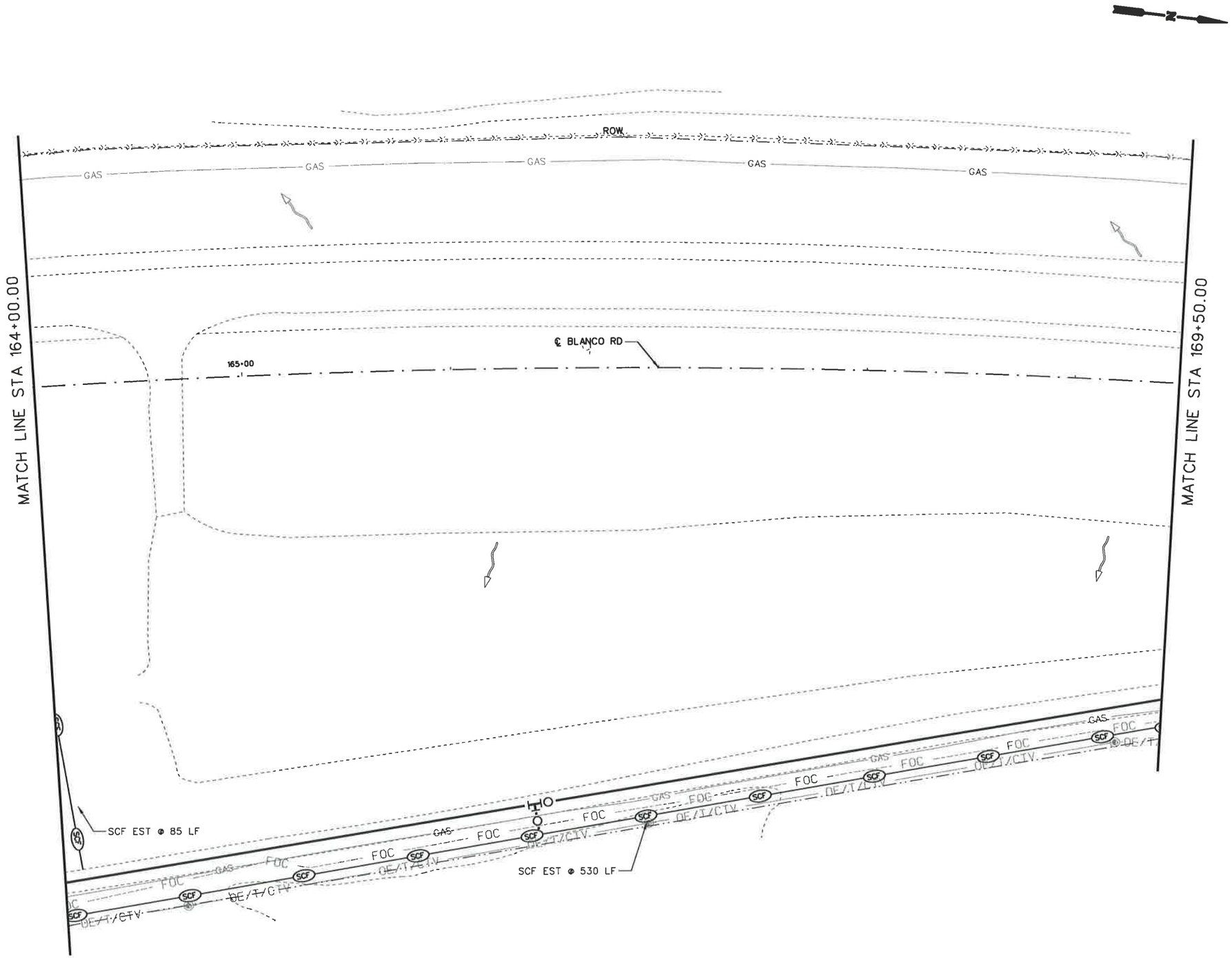

25 12.5 0 25 50
HORIZ. SCALE FEET

LEGEND

- PROPOSED WATER LINE
- -GAS— PROPOSED GAS LINE
- PROPOSED DUCT BANK
- RFD ROCK FILTER DAM (RFD)
- SCF SEDIMENT CONTROL FENCE (SCF)
- OVERALL DRAINAGE FLOW
- SANDBAGS FOR EROSION CONTROL

STATE OF TEXAS
STEVEN D. TEMPLER
88656
LICENSED
PROFESSIONAL ENGINEER

STEVEN D. TEMPLER P.E. 12.09.2007
DATE

NO.	REVISION	BY	DATE

CP&Y Chiang, Patel & Yerby, Inc.

TEDSI INFRASTRUCTURE GROUP
Consulting Engineers
10999 IH 10 West • Suite 320
San Antonio, Texas 78230
(210) 858-0610

BEXAR COUNTY
PUBLIC WORKS DIVISION

F.M. 2696 (BLANCO ROAD)

SW3P LAYOUT
PHASE 1 STAGE 1
STA 164+00 TO STA 169+50.00

SHEET 16 OF 19

Designed: CA	STATE	BEXAR COUNTY FILE NUMBER	PLAN SET NO. 778
Checked: SDT	TEXAS		
Drawn: SS	COUNTY		OF
Checked: SDT	BEXAR		842

p:\2007\27958-1 blanco rd south\design\csj\ENVIRONMENTAL\Phase I\Phase I Stage I\6102TSSW3PUTIL_P1_S1-16.050
12/9/2007 11:21:23 AM

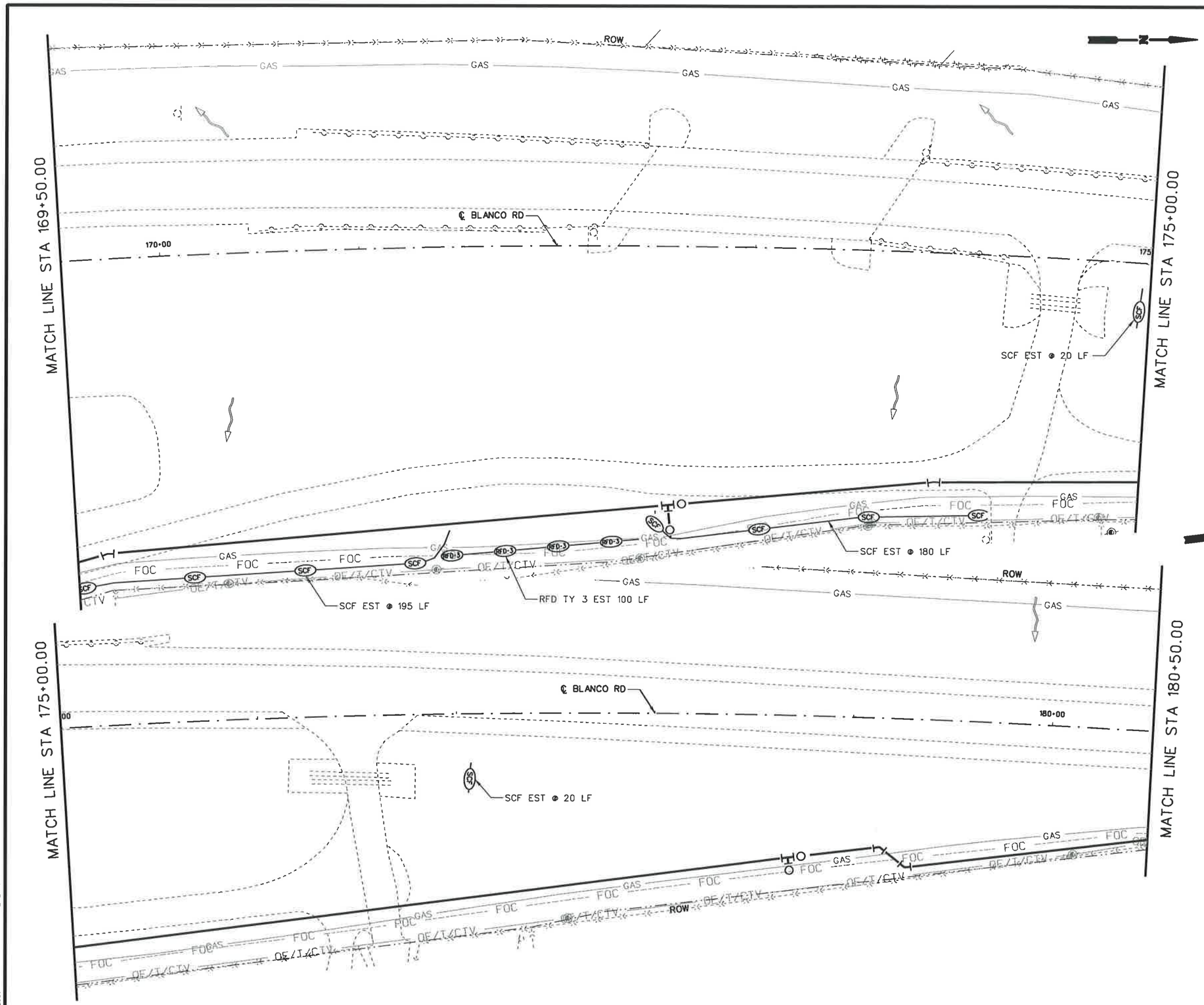

25 12.5 0 25 50
SCALE FEET

LEGEND

- PROPOSED WATER LINE
- PROPOSED GAS LINE
- PROPOSED DUCT BANK
- ROCK FILTER DAM (RFD)
- SEDIMENT CONTROL FENCE (SCF)
- OVERALL DRAINAGE FLOW
- SANDBAGS FOR EROSION CONTROL

STATE OF TEXAS
STEVEN D. TEMPLER
88656
LICENSED
PROFESSIONAL ENGINEER

STEVEN D. TEMPLER P.E. 12.01.2007
STEVEN D. TEMPLER DATE

NO.	REVISION	BY	DATE

CP&Y Chiang, Patel & Yerby, Inc.

TEDSI INFRASTRUCTURE GROUP
Consulting Engineers
10999 IH 10 West • Suite 320
San Antonio, Texas 78230
(210) 858-0610

BEXAR COUNTY
PUBLIC WORKS DIVISION

F.M. 2696 (BLANCO ROAD)

SW3P LAYOUT

PHASE 1 STAGE 1
STA 169+50.00 TO STA 180+50.00

SHEET 17 OF 19

Designed: CA	STATE	BEXAR COUNTY FILE NUMBER	PLAN SET NO.
Checked: SDT	TEXAS		774
Drawn: SS	COUNTY		OF
Checked: SDT	BEXAR		842

p:\2007\27958-1 blanco rd south\design\cs\ENVIRONMENTAL\Phase I\Phase I Stage I\5102TSSW3PUTIL_PL_S1-17.dgn
12/9/2007 11:21:24 AM

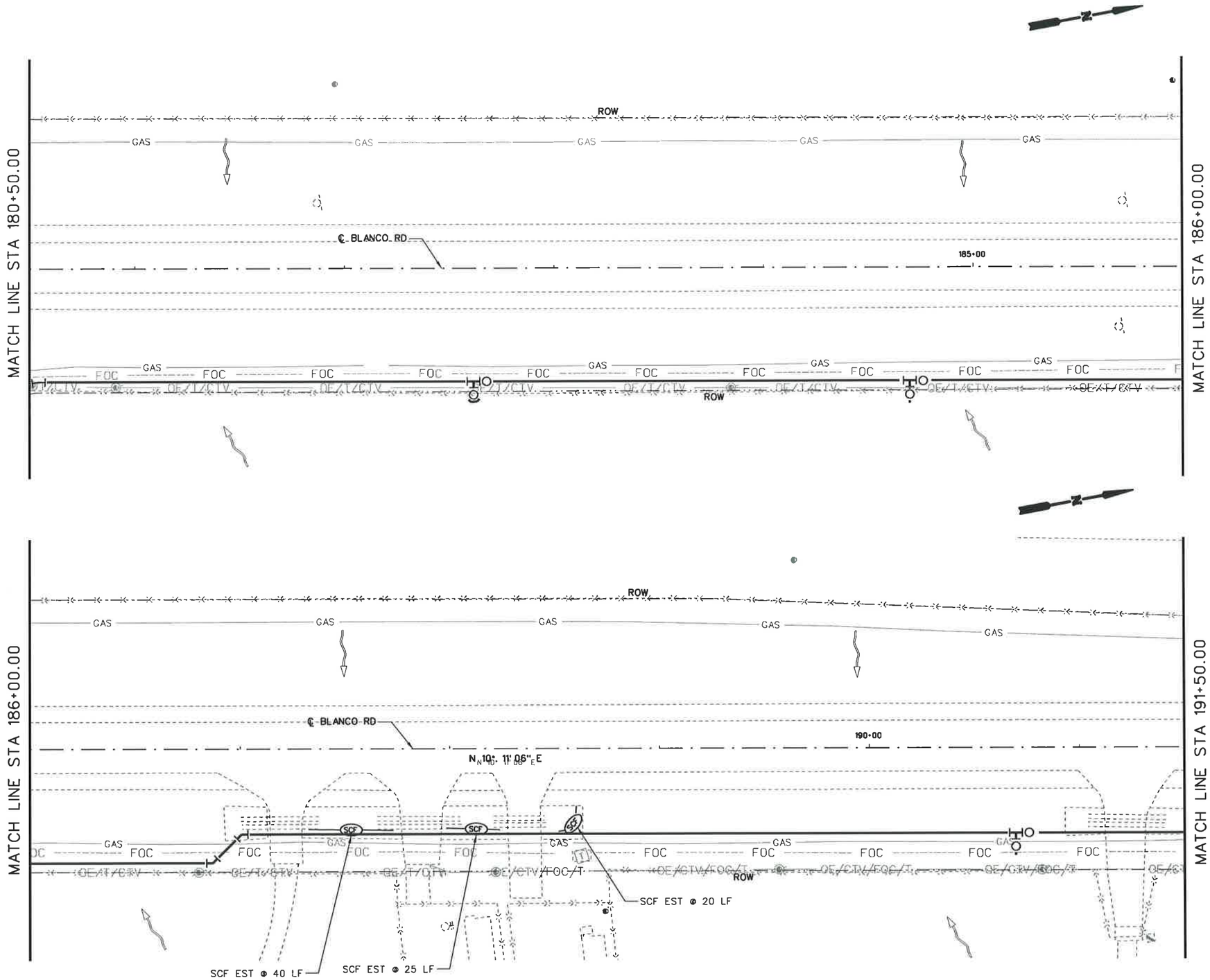

25 12.5 0 25 50
HORIZ. SCALE FEET

LEGEND

- PROPOSED WATER LINE
- GAS — PROPOSED GAS LINE
- PROPOSED DUCT BANK
- RFD — ROCK FILTER DAM (RFD)
- SCF — SEDIMENT CONTROL FENCE (SCF)
- OVERALL DRAINAGE FLOW
- SANDBAGS FOR EROSION CONTROL

STATE OF TEXAS
STEVEN D. TEMPLER
88656
LICENSED
PROFESSIONAL ENGINEER

STEVEN D. TEMPLER P.E. 12.09.2007
DATE

NO.	REVISION	BY	DATE

CP&Y Chiang, Patel & Yerby, Inc.

TEDSI INFRASTRUCTURE GROUP
Consulting Engineers
10999 IH 10 West • Suite 320
San Antonio, Texas 78230
(210) 858-8610

BEXAR COUNTY
PUBLIC WORKS DIVISION

F.M. 2696 (BLANCO ROAD)

SW3P LAYOUT

PHASE 1 STAGE 1
STA 180+50.00 TO STA 191+50.00

SHEET 18 OF 19

Designed: CA	STATE	BEXAR COUNTY FILE NUMBER	PLAN SET NO.
Checked: SDT	TEXAS		780
Drawn: SS	COUNTY		OF
Checked: SDT	BEXAR		842

p:\2007\27958-1 blanco rd south\design\cs\ENVIRONMENTAL\Phase 1\Phase 1\Stage 1\6102TSSW3PUTIL_P1_S1-18.dgn
12/9/2007 11:21:26 AM

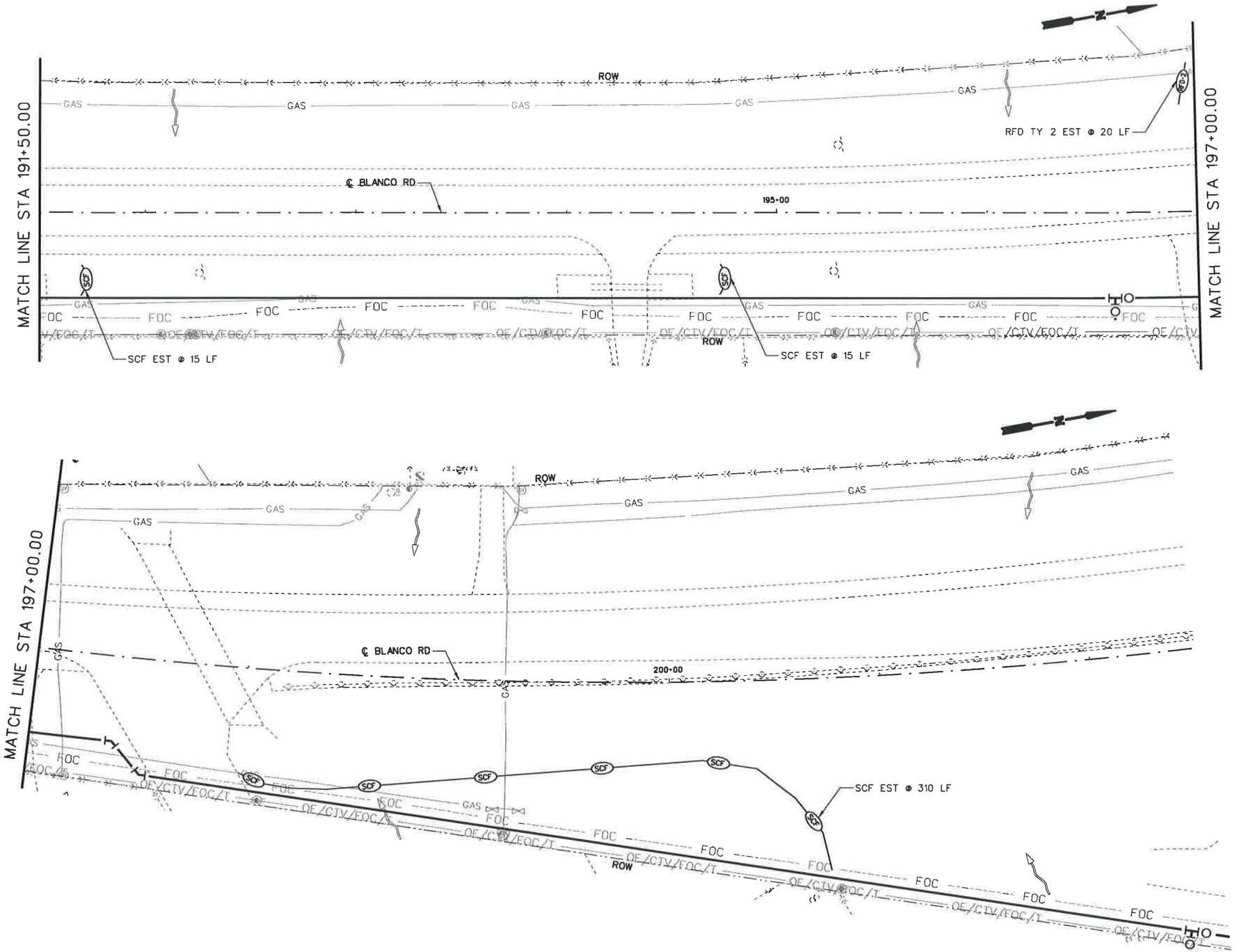

25 12.5 0 25 50
HORIZ. SCALE FEET

LEGEND

- PROPOSED WATER LINE
- GAS — PROPOSED GAS LINE
- PROPOSED DUCT BANK
- RFD — ROCK FILTER DAM (RFD)
- SCF — SEDIMENT CONTROL FENCE (SCF)
- OVERALL DRAINAGE FLOW
- SANDBAGS FOR EROSION CONTROL

STATE OF TEXAS
STEVEN D. TEMPLER
88656
LICENSED
PROFESSIONAL ENGINEER

STEVEN D. TEMPLER — DATE 12.09.2007

NO.	REVISION	BY	DATE

CP&Y Chiang, Patel & Yerby, Inc.

TEDSI INFRASTRUCTURE GROUP
Consulting Engineers
10999 IH 10 West • Suite 320
San Antonio, Texas 78230
(210) 858-8610

BEXAR COUNTY
PUBLIC WORKS DIVISION

F.M. 2696 (BLANCO ROAD)

SW3P LAYOUT

PHASE 1 STAGE 1
STA 191+50.00 TO STA 202+50.00

SHEET 19 OF 19

Designed: CA	STATE	BEXAR COUNTY FILE NUMBER	PLAN SET NO.
Checked: SDT	TEXAS		781
Drawn: SS	COUNTY		OF
Checked: SDT	BEXAR		842

p:\2007\27958-1 blanco rd south\design\cs\ENVIRONMENTAL\Phase I\Phase I Stage I\51027SSW3PUTIL_P1_S1-19.050
12/9/2007 11:21:27 AM

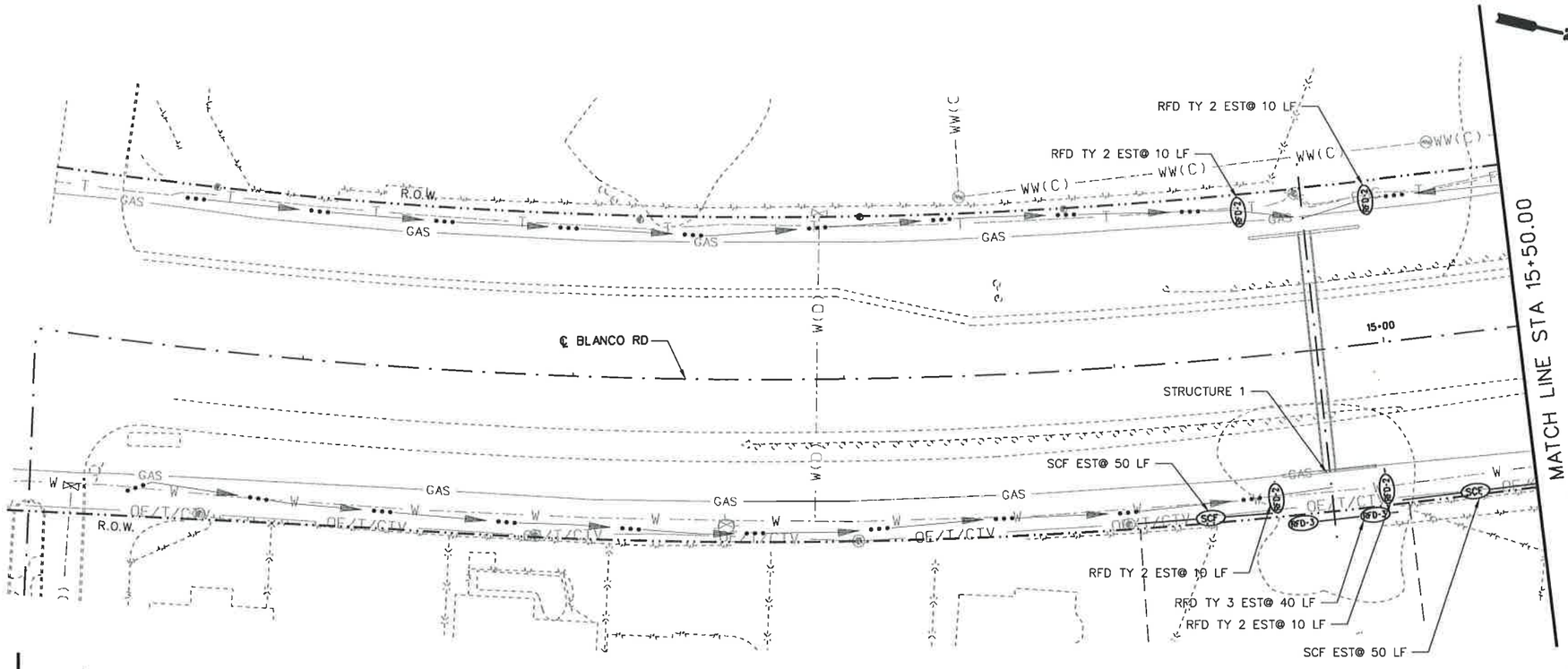

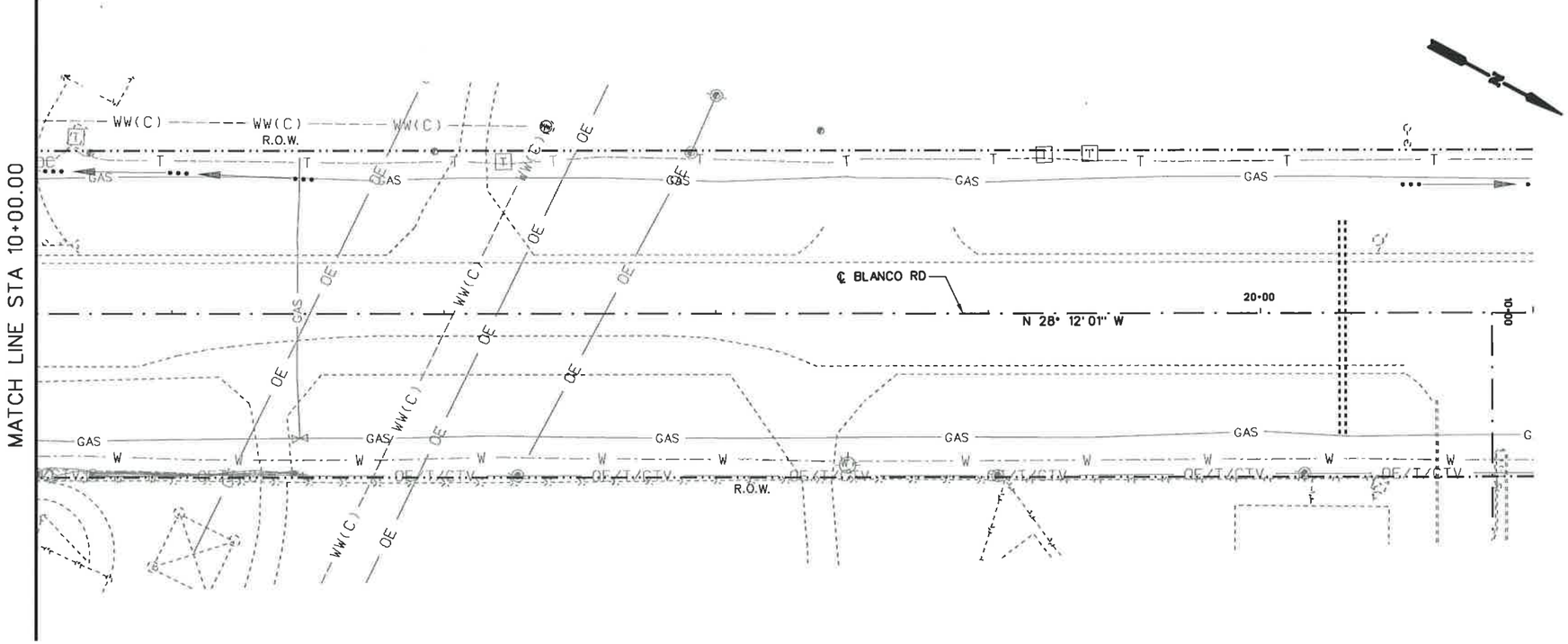

25 12.5 0 25 50
HORIZ. SCALE FEET

LEGEND

- WORKZONE
- TEMP DETOUR
- (RFD) ROCK FILTER DAM (RFD)
- (SCF) SEDIMENT CONTROL FENCE (SCF)
- DITCH FLOW LINE
- OVERALL DRAINAGE FLOW
- SEEDING
- SOIL RETENTION BLANKET (SRB)
- SANDBAGS FOR EROSION CONTROL

NOTES:
1. CONSTRUCTION EXITS (TY1) TO BE LOCATED IN THE FIELD AND APPROVED BY THE ENGINEER. THE SIZE OF THE CONSTRUCTION EXITS WILL BE 78 SY EACH (50' X 14'). REFER TO STATE STANDARD "EC(3)-93" FOR DETAILS.

STATE OF TEXAS
STEVEN D. TEMPLER
88656
LICENSED
PROFESSIONAL ENGINEER

STEVEN D. TEMPLER P.E. 12-09-2007
DATE

NO.	REVISION	BY	DATE

CP&Y Chiang, Patel & Yerby, Inc.

TEDSI INFRASTRUCTURE GROUP
Consulting Engineers
10999 IH 10 West • Suite 320
San Antonio, Texas 78230
(210) 858-0610

BEXAR COUNTY
PUBLIC WORKS DIVISION

F.M. 2696 (BLANCO ROAD)

SW3P LAYOUT

PHASE 1 STAGE 2 (STRUCTURE No. 1)
STA 4+50.00 TO STA 15+50.00

SHEET 1 OF 1

Designed: CA	STATE	BEXAR COUNTY FILE NUMBER	PLAN SET NO. 78
Checked: SDT	TEXAS		OF
Drawn: SS	COUNTY		842
Checked: SDT	BEXAR		

p:\2007\27958-1 blanco rd south\design\cs\ENVIRONMENTAL\Phase 1\Phase 1\Stage II\6102TSSW3PSTR01_P1_S2-01.DGN
12/9/2007 11:21:29 AM

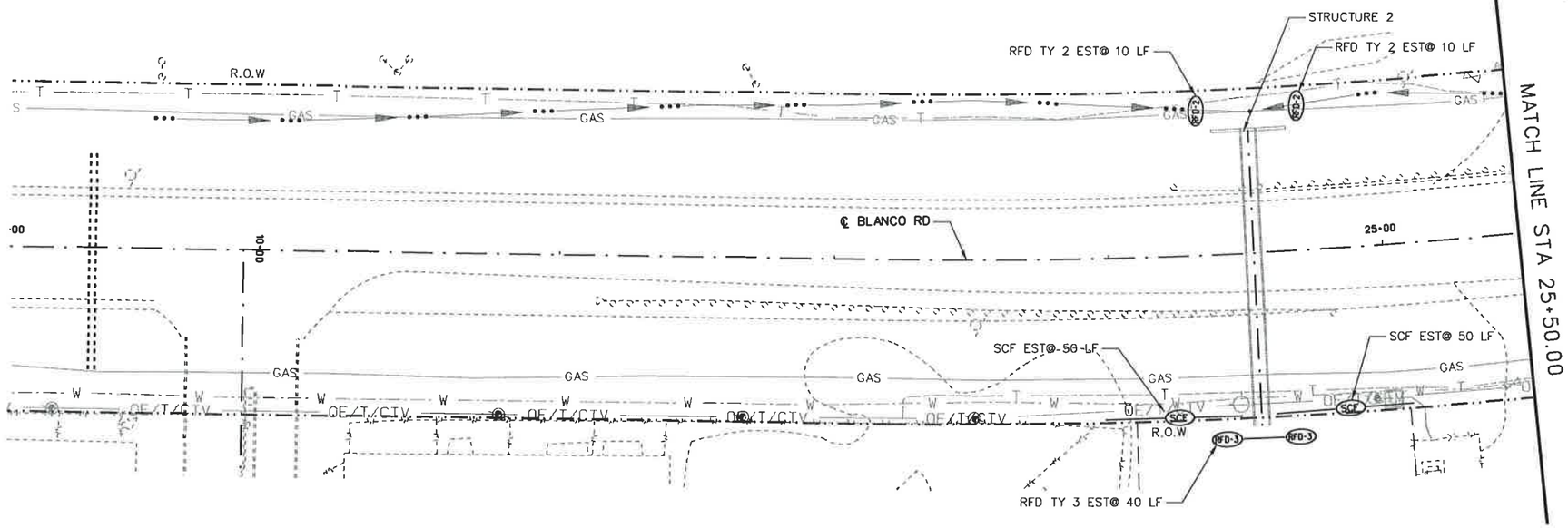

25 12.5 0 25 50
SCALE FEET

LEGEND

- WORKZONE
- TEMP DETOUR
- ROCK FILTER DAM (RFD)
- SEDIMENT CONTROL FENCE (SCF)
- DITCH FLOW LINE
- OVERALL DRAINAGE FLOW
- SEEDING
- SOIL RETENTION BLANKET (SRB)
- SANDBAGS FOR EROSION CONTROL

NOTES:
1. CONSTRUCTION EXITS (TY1) TO BE LOCATED IN THE FIELD AND APPROVED BY THE ENGINEER. THE SIZE OF THE CONSTRUCTION EXITS WILL BE 78 SY EACH (50' X 14'). REFER TO STATE STANDARD "EC(3)-93" FOR DETAILS.

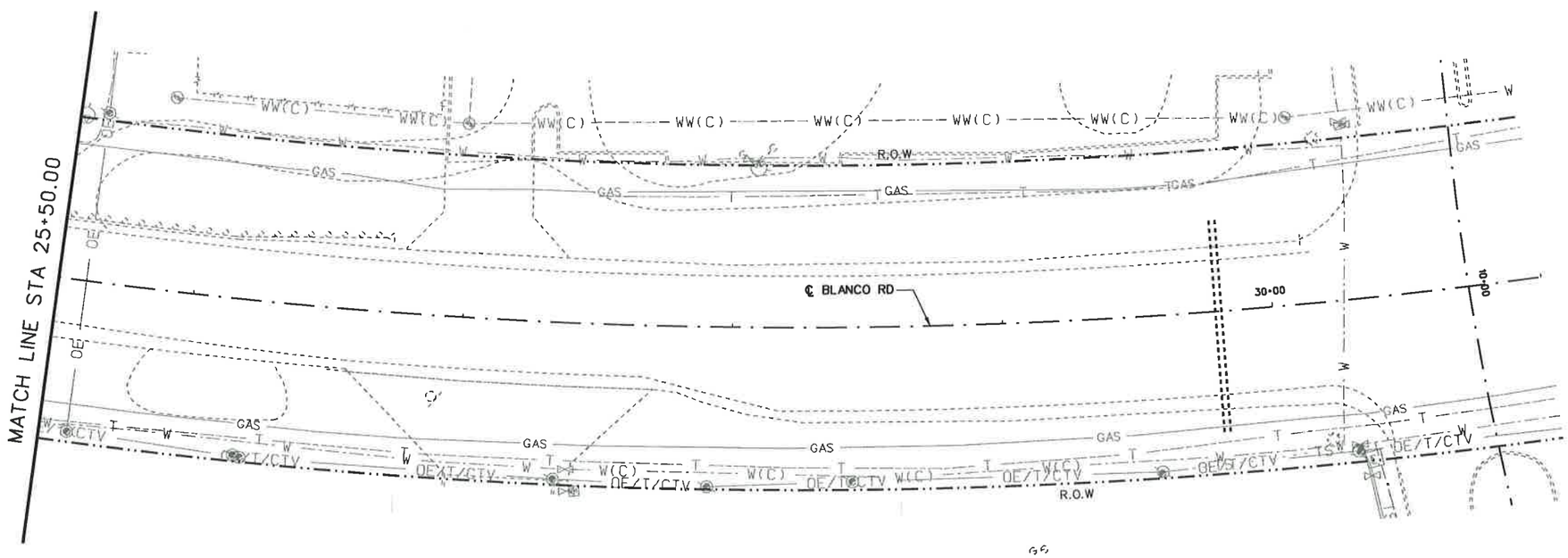

STATE OF TEXAS
STEVEN D. TEMPLER
88656
LICENSED
PROFESSIONAL ENGINEER

STEVEN D. TEMPLER P.E. 12.09.2007
DATE

NO.	REVISION	BY	DATE

CP&Y Chiang, Patel & Yerby, Inc.

TEDSI INFRASTRUCTURE GROUP
Consulting Engineers
10999 IH 10 West • Suite 320
San Antonio, Texas 78230
(210) 858-0610

BEXAR COUNTY
PUBLIC WORKS DIVISION

F.M. 2696 (BLANCO ROAD)

SW3P LAYOUT

PHASE 1 STAGE 2 (STUCTURE No. 2)
STA 26+50.00 TO STA 37+50.00

SHEET 1 OF 1

Designed: CA	STATE	BEXAR COUNTY FILE NUMBER	PLAN SET NO.
Checked: SDT	TEXAS		783
Drawn: SS	COUNTY		OF
Checked: SDT	BEXAR		842

p:\2007\27958-1 blanco rd south\design\cs\ENVIRONMENTAL\Phase 1\Phase 1\Stage 1\6102TSSW3PSTR02_P1_S2-01.DGN
12/9/2007 11:21:30 AM

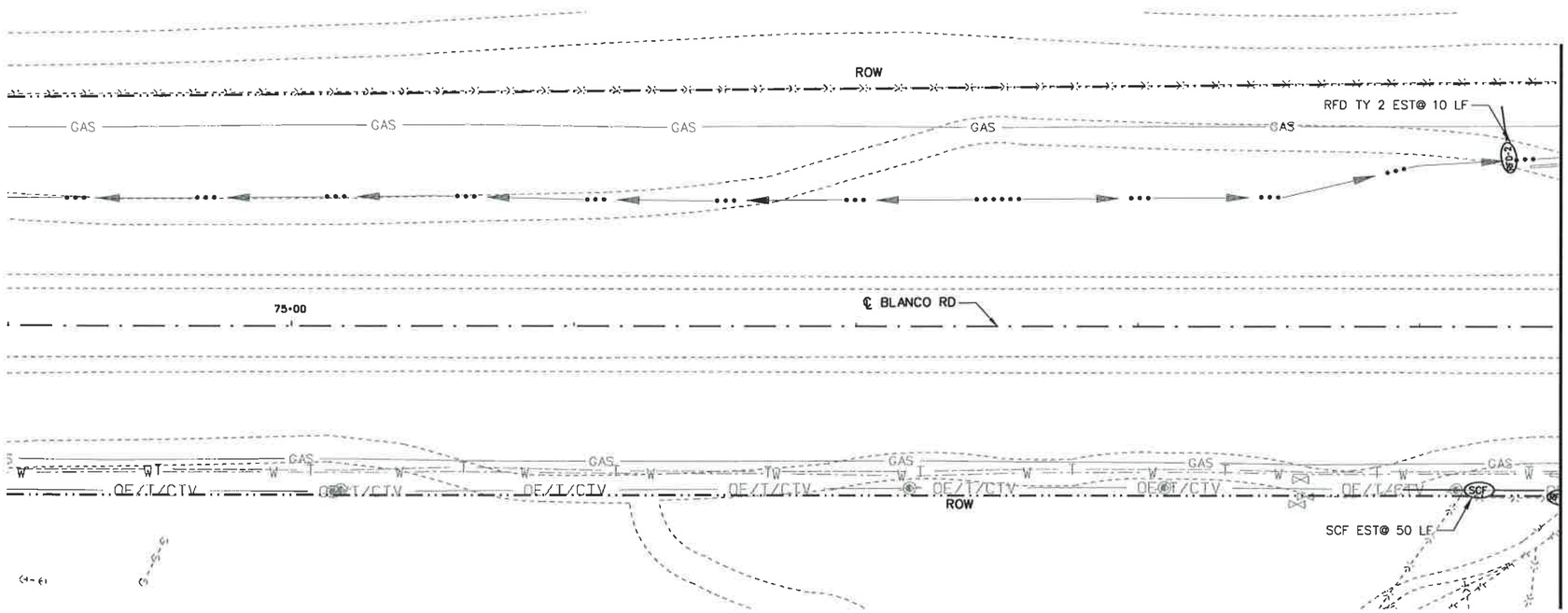

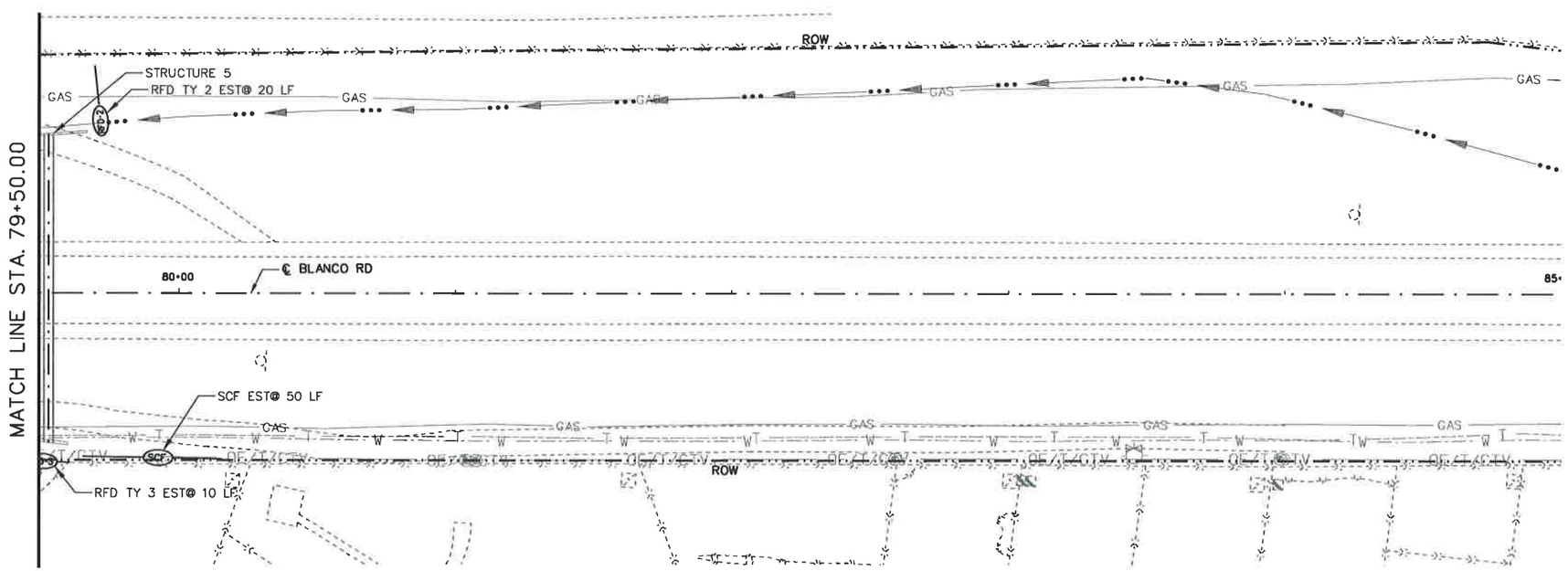

25 12.5 0 25 50
HORIZ. SCALE FEET

LEGEND

- WORKZONE
- TEMP DETOUR
- ROCK FILTER DAM (RFD)
- SEDIMENT CONTROL FENCE (SCF)
- DITCH FLOW LINE
- OVERALL DRAINAGE FLOW
- SEEDING
- SOIL RETENTION BLANKET (SRB)
- SANDBAGS FOR EROSION CONTROL

NOTES:
1. CONSTRUCTION EXITS (TY1) TO BE LOCATED IN THE FIELD AND APPROVED BY THE ENGINEER. THE SIZE OF THE CONSTRUCTION EXITS WILL BE 78 SY EACH (50' X 14'). REFER TO STATE STANDARD "EC(3)-93" FOR DETAILS.

STATE OF TEXAS
STEVEN D. TEMPLER
88656
LICENSED
PROFESSIONAL ENGINEER

STEVEN D. TEMPLER P.E. 12-09-2007
DATE

NO.	REVISION	BY	DATE

CP&Y Chiang, Patel & Yerby, Inc.

TEDSI INFRASTRUCTURE GROUP
Consulting Engineers
10999 IH 10 West • Suite 320
San Antonio, Texas 78230
(210) 858-6610

BEXAR COUNTY
PUBLIC WORKS DIVISION

F.M. 2696 (BLANCO ROAD)

SW3P LAYOUT
PHASE 1 STAGE 2 (STUCTURE No. 5)
STA 74+00.00 TO STA 85+00.00

SHEET 1 OF 1

Designed: CA	STATE	BEXAR COUNTY FILE NUMBER	PLAN SET NO.
Checked: SDT	TEXAS		784
Drawn: SS	COUNTY		OF
Checked: SDT	BEXAR		842

p:\2007\27958-1 blanco rd south\design\cs\ENVIRONMENTAL\Phase 1\Phase 1Stage II\6102TSSW3PSTR05_P1_S2-01.dgn
12/9/2007 11:21:32 AM

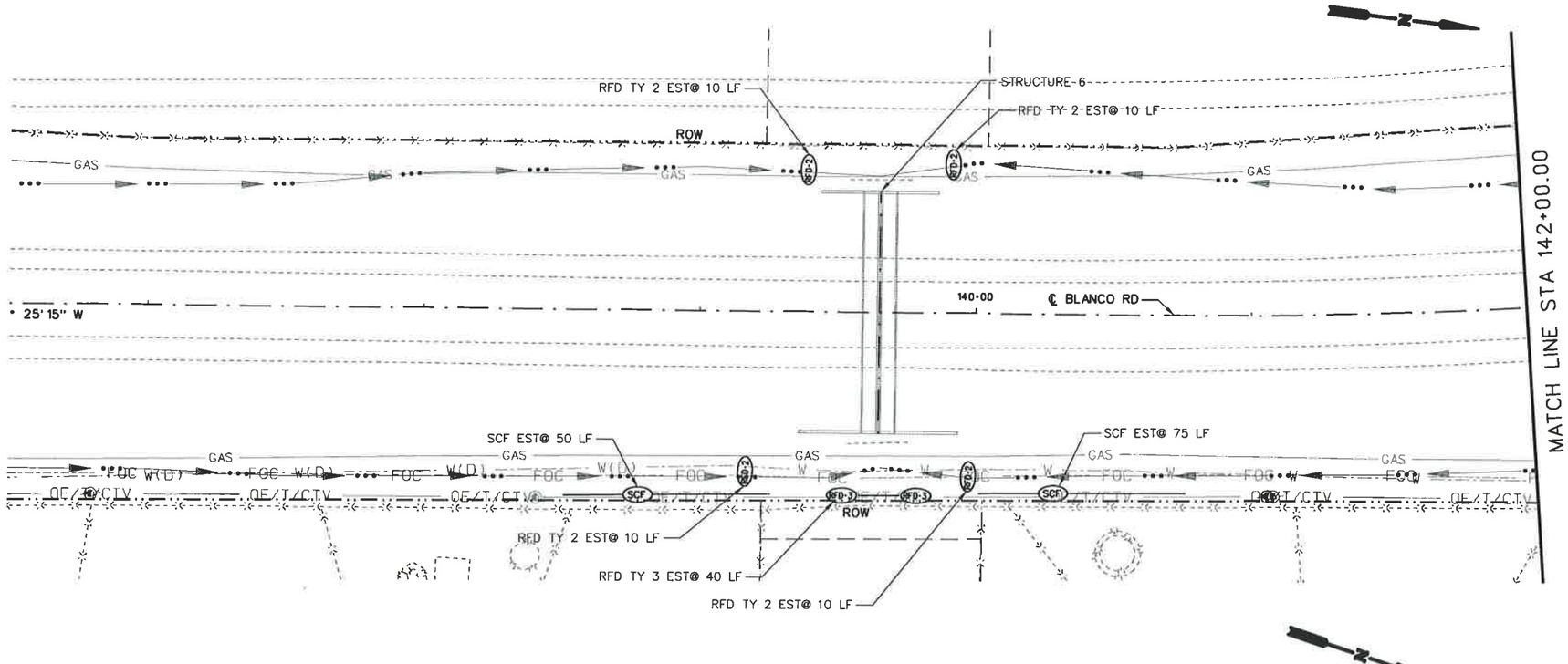

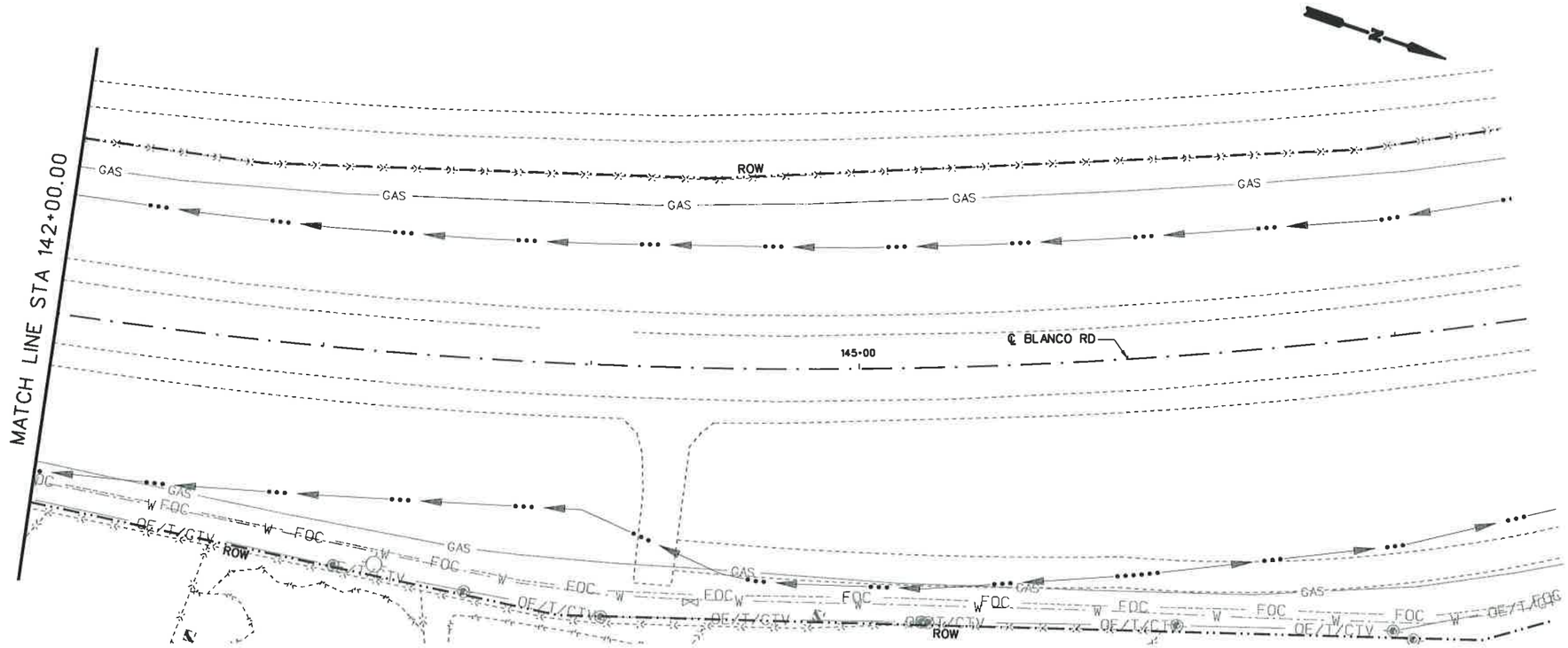

25 12.5 0 25 50
HORIZ. SCALE FEET

LEGEND

- WORKZONE
- TEMP DETOUR
- ROCK FILTER DAM (RFD)
- SEDIMENT CONTROL FENCE (SCF)
- DITCH FLOW LINE
- OVERALL DRAINAGE FLOW
- SEEDING
- SOIL RETENTION BLANKET (SRB)
- SANDBAGS FOR EROSION CONTROL

NOTES:
1. CONSTRUCTION EXITS (TY1) TO BE LOCATED IN THE FIELD AND APPROVED BY THE ENGINEER. THE SIZE OF THE CONSTRUCTION EXITS WILL BE 78 SY EACH (50' X 14'). REFER TO STATE STANDARD "EC(3)-93" FOR DETAILS.

STATE OF TEXAS
STEVEN D. TEMPLER
88656
LICENSED
PROFESSIONAL ENGINEER

STEVEN D. TEMPLER — P.E. — 12-09-2007 — DATE

NO.	REVISION	BY	DATE

CP&Y Chiang, Patel & Yerby, Inc.

TEDSI INFRASTRUCTURE GROUP
Consulting Engineers
10999 IH 10 West • Suite 320
San Antonio, Texas 78230
(210) 858-8610

BEXAR COUNTY
PUBLIC WORKS DIVISION

F.M. 2696 (BLANCO ROAD)

SW3P LAYOUT

PHASE 1 STAGE 2 (STUCTURE No. 6)
STA 136+50.00 TO STA 140+00.00

SHEET 1 OF 1

Designed: CA	STATE	BEXAR COUNTY FILE NUMBER	PLAN SET NO. 78B
Checked: SDT	TEXAS		OF
Drawn: SS	COUNTY		842
Checked: SDT	BEXAR		

p:\2007\27958-1 blanco rd south\design\csj\ENVIRONMENTAL\Phase I\Phase I Stage I\6102TSSW3PSTR06_P1_S2-01.dgn
12/9/2007 11:21:33 AM

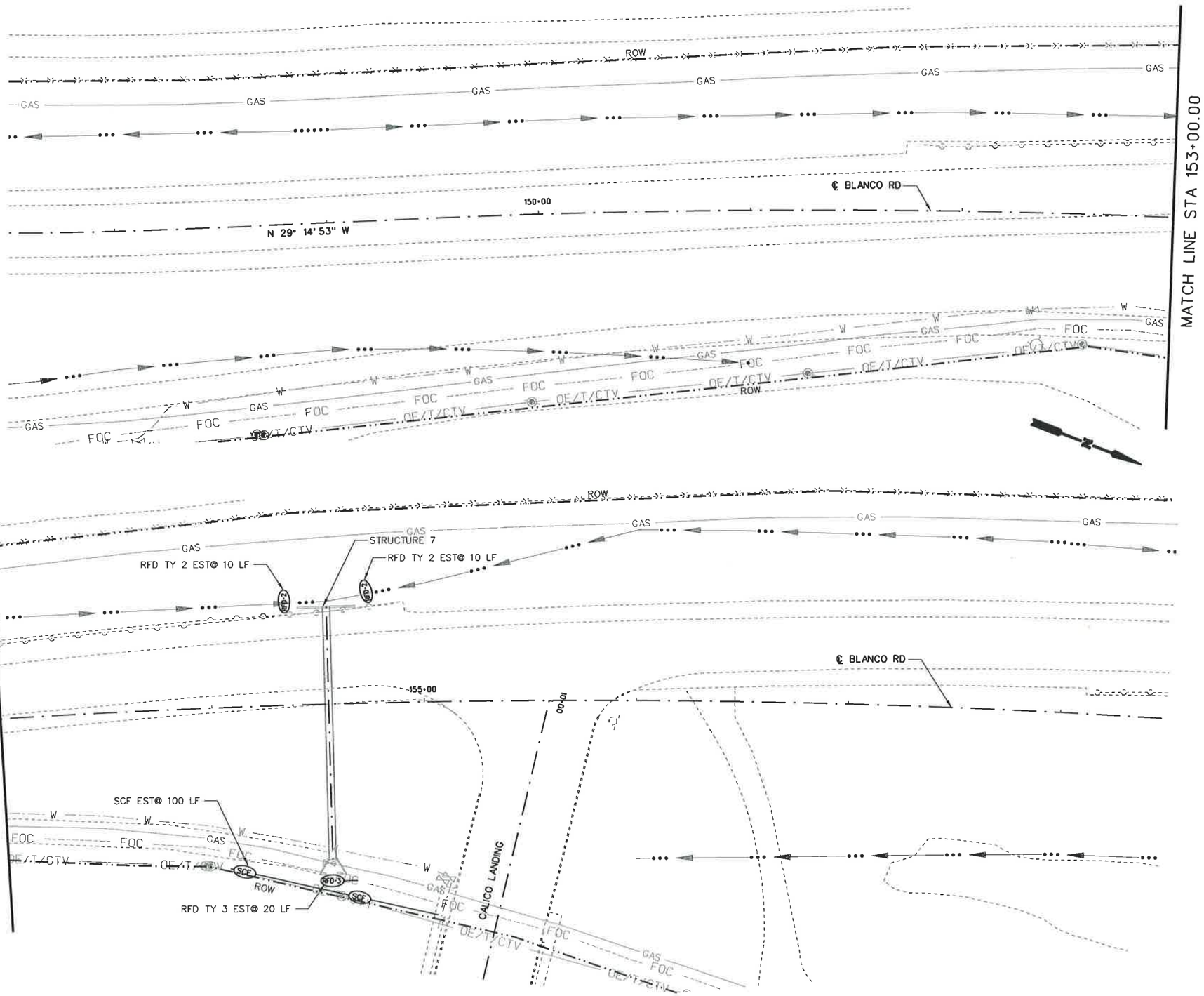

25 12.5 0 25 50
HORIZ. SCALE FEET

LEGEND

- WORKZONE
- TEMP DETOUR
- ROCK FILTER DAM (RFD)
- SEDIMENT CONTROL FENCE (SCF)
- DITCH FLOW LINE
- OVERALL DRAINAGE FLOW
- SEEDING
- SOIL RETENTION BLANKET (SRB)
- SANDBAGS FOR EROSION CONTROL

NOTES:
1. CONSTRUCTION EXITS (TY1) TO BE LOCATED IN THE FIELD AND APPROVED BY THE ENGINEER. THE SIZE OF THE CONSTRUCTION EXITS WILL BE 78 SY EACH (50' X 14'). REFER TO STATE STANDARD "EC(3)-93" FOR DETAILS.

STATE OF TEXAS
STEVEN D. TEMPLER
88656
LICENSED
PROFESSIONAL ENGINEER

STEVEN D. TEMPLER P.E. 12-09-2007
STEVEN D. TEMPLER DATE

NO.	REVISION	BY	DATE

CP&Y Chiang, Patel & Yerby, Inc.

TEDSI INFRASTRUCTURE GROUP
Consulting Engineers
10999 IH 10 West • Suite 320
San Antonio, Texas 78230
(210) 858-8610

BEXAR COUNTY
PUBLIC WORKS DIVISION

F.M. 2696 (BLANCO ROAD)

SW3P LAYOUT
PHASE 1 STAGE 2 (STUCTURE No. 7)
STA 147+50.00 TO STA 158+50.00

SHEET 1 OF 1

Designed: CA	STATE	BEXAR COUNTY FILE NUMBER	PLAN SET NO. 788
Checked: SDT	TEXAS		OF
Drawn: SS	COUNTY		842
Checked: SDT	BEXAR		

P:\2007\27958-1 Blanco Rd South\DESIGN\CSJ\ENVIRONMENTAL\Phase 1\Phase 1\Stage 1\6102TSSW3PSTR07_P1_S2-01.DGN
12/9/2007 12:07:20 PM

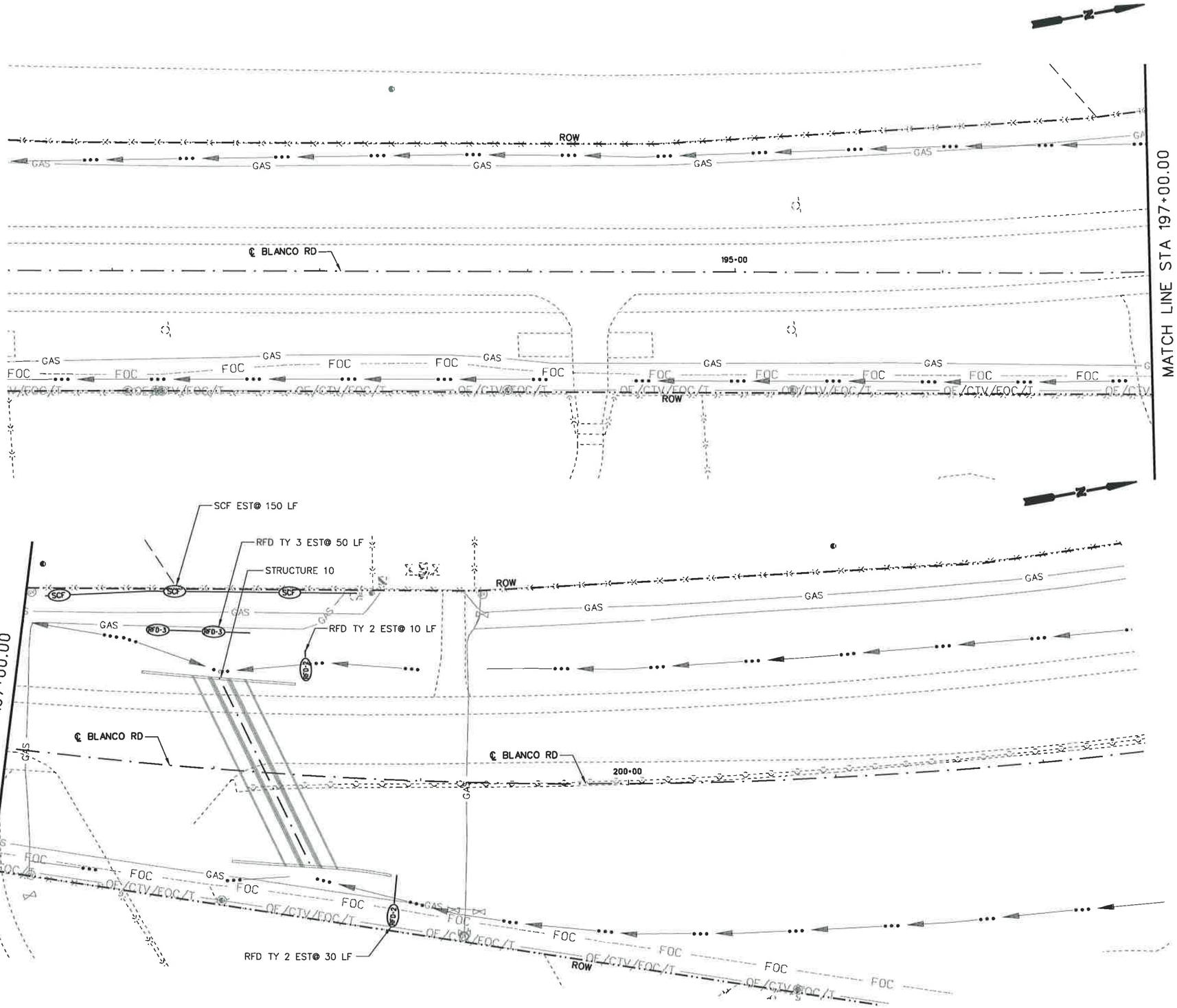

25 12.5 0 25 50
HORIZ. SCALE FEET

LEGEND

- WORKZONE
- TEMP DETOUR
- ROCK FILTER DAM (RFD)
- SEDIMENT CONTROL FENCE (SCF)
- DITCH FLOW LINE
- OVERALL DRAINAGE FLOW
- SEEDING
- SOIL RETENTION BLANKET (SRB)
- SANDBAGS FOR EROSION CONTROL

NOTES:
1. CONSTRUCTION EXITS (TY1) TO BE LOCATED IN THE FIELD AND APPROVED BY THE ENGINEER. THE SIZE OF THE CONSTRUCTION EXITS WILL BE 78 SY EACH (50' X 14'). REFER TO STATE STANDARD "EC(3)-93" FOR DETAILS.

STATE OF TEXAS
STEVEN D. TEMPLER
88656
LICENSED
PROFESSIONAL ENGINEER

STEVEN D. TEMPLER P.E. 12-09-2007
STEVEN D. TEMPLER DATE

NO.	REVISION	BY	DATE

CP&Y Chiang, Patel & Yerby, Inc.

TEDSI INFRASTRUCTURE GROUP
Consulting Engineers
10999 IH 10 West • Suite 330
San Antonio, Texas 78230
(210) 858-0610

BEXAR COUNTY
PUBLIC WORKS DIVISION

F.M. 2696 (BLANCO ROAD)

SW3P LAYOUT

PHASE 1 STAGE 2 (STUCTURE No. 10)
STA 191+50.00 TO STA 202+50.00

SHEET 1 OF 1

Designed: CA	STATE	BEXAR COUNTY FILE NUMBER	PLAN SET NO. 37
Checked: SDT	TEXAS		
Drawn: SS	COUNTY		OF
Checked: SDT	BEXAR		842

p:\2007\27958-1 blanco rd south\design\cs\ENVIRONMENTAL\Phase I\Phase I Stage II\61027SSW3PSTR10_P1_S2-01.DGN
12/9/2007 11:21:36 AM

SHEET OMITTED

NO.	REVISION	BY	DATE

CP&Y Chiang, Patel & Yerby, Inc.

BEXAR COUNTY
PUBLIC WORKS DIVISION

F.M. 2696 (BLANCO ROAD)

OMITTED SHEETS

Designed: RTF	STATE	BEXAR COUNTY FILE NUMBER	PLAN SET NO.
Checked: JMC	TEXAS		788
Drawn: CDA	COUNTY		OF
Checked: JMC	BEXAR	2708-01-022, ETC.	842

pw:/Active Projects/BEX6102/8.00 Plans and Drawings/8.10 Cut Sheets/8.1.10 Road/6102CSR05XX.001
11/4/2007 6:20:06 PM

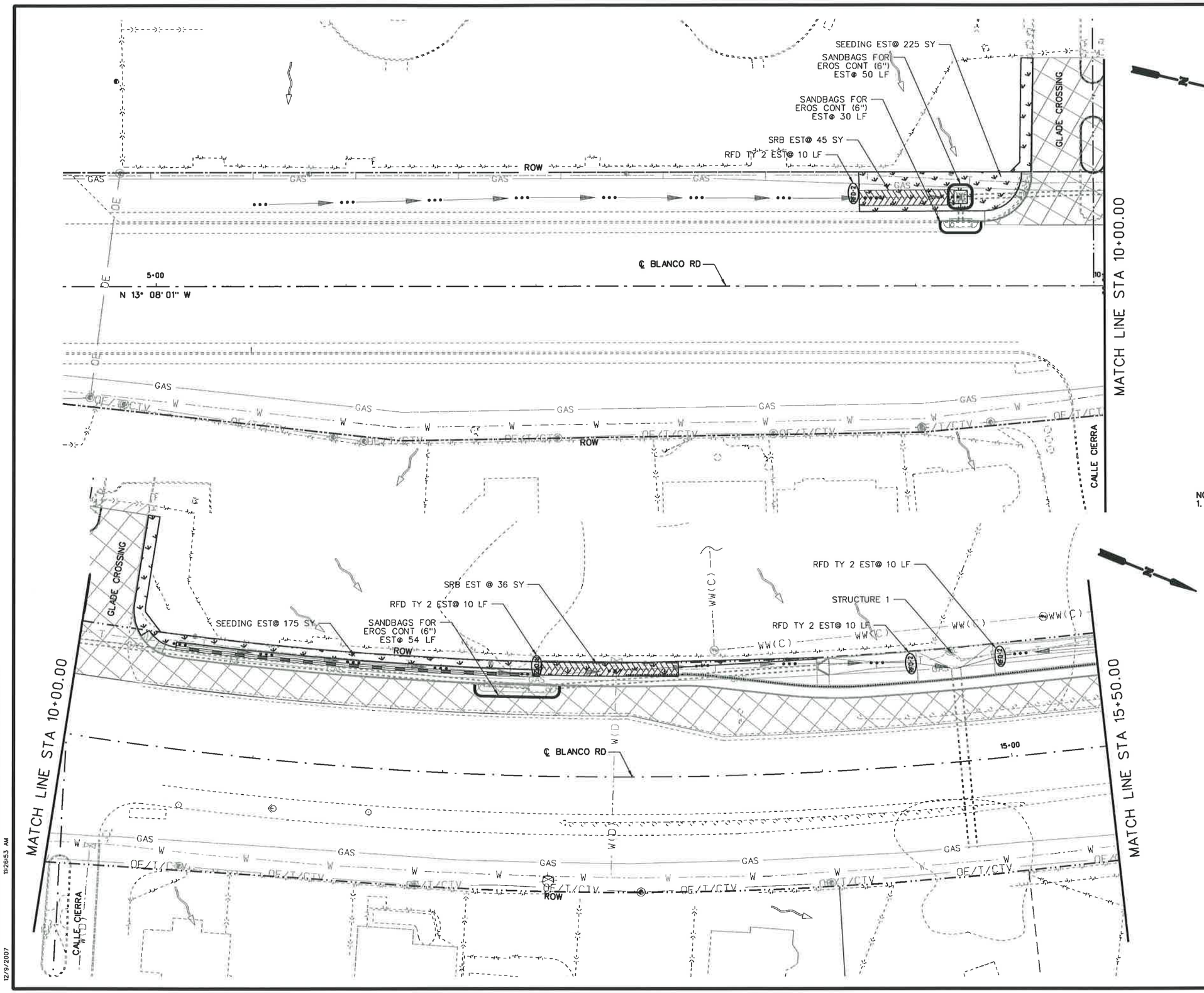

25 12.5 0 25 50
HORIZ. SCALE FEET

LEGEND

- WORKZONE
- TEMP DETOUR
- ROCK FILTER DAM (RFD)
- SEDIMENT CONTROL FENCE (SCF)
- DITCH FLOW LINE
- OVERALL DRAINAGE FLOW
- SEEDING
- SOIL RETENTION BLANKET (SRB)
- SANDBAGS FOR EROSION CONTROL

NOTES:
1. CONSTRUCTION EXITS (TY1) TO BE LOCATED IN THE FIELD AND APPROVED BY THE ENGINEER. THE SIZE OF THE CONSTRUCTION EXITS WILL BE 78 SY EACH (50' X 14'). REFER TO STATE STANDARD "EC(3)-93" FOR DETAILS.

STATE OF TEXAS
STEVEN D. TEMPLER
88656
LICENSED
PROFESSIONAL ENGINEER

STEVEN D. TEMPLER P.E. 12.09.2007
DATE

NO.	REVISION	BY	DATE

CP&Y Chiang, Patel & Yerby, Inc.

TEDSI INFRASTRUCTURE GROUP
Consulting Engineers
10999 IH 10 West • Suite 328
San Antonio, Texas 78230
(210) 858-0610

BEXAR COUNTY
PUBLIC WORKS DIVISION

F.M. 2696 (BLANCO ROAD)

SW3P LAYOUT

PHASE 2 STAGE 1
STA 4+50.00 TO STA 15+50.00

SHEET 1 OF 5

Designed: CA	STATE	BEXAR COUNTY FILE NUMBER	PLAN SET NO.
Checked: SDT	TEXAS		789
Drawn: SS	COUNTY		OF
Checked: SDT	BEXAR		842

p:\2007\27958-1 blanco rd south\design\cs\ENVIRONMENTAL\Phase II\61021TSSW3P_P2_S1-01.DGN
12/9/2007 11:26:53 AM

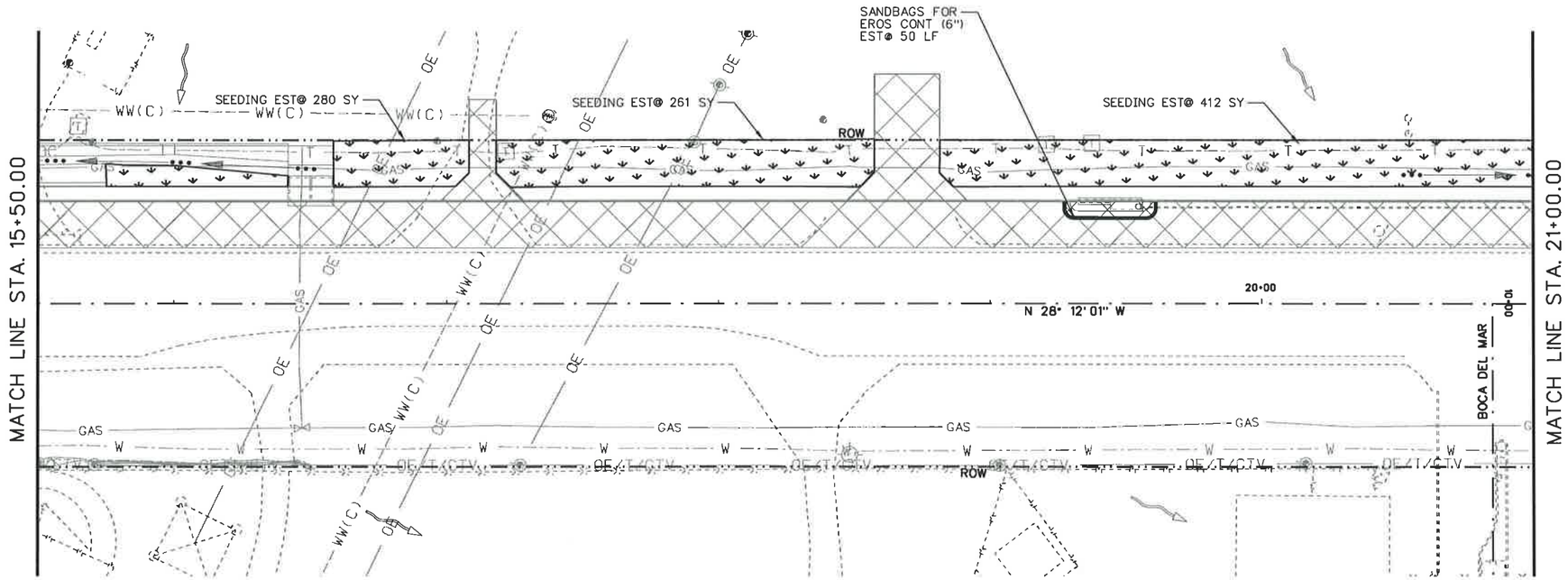

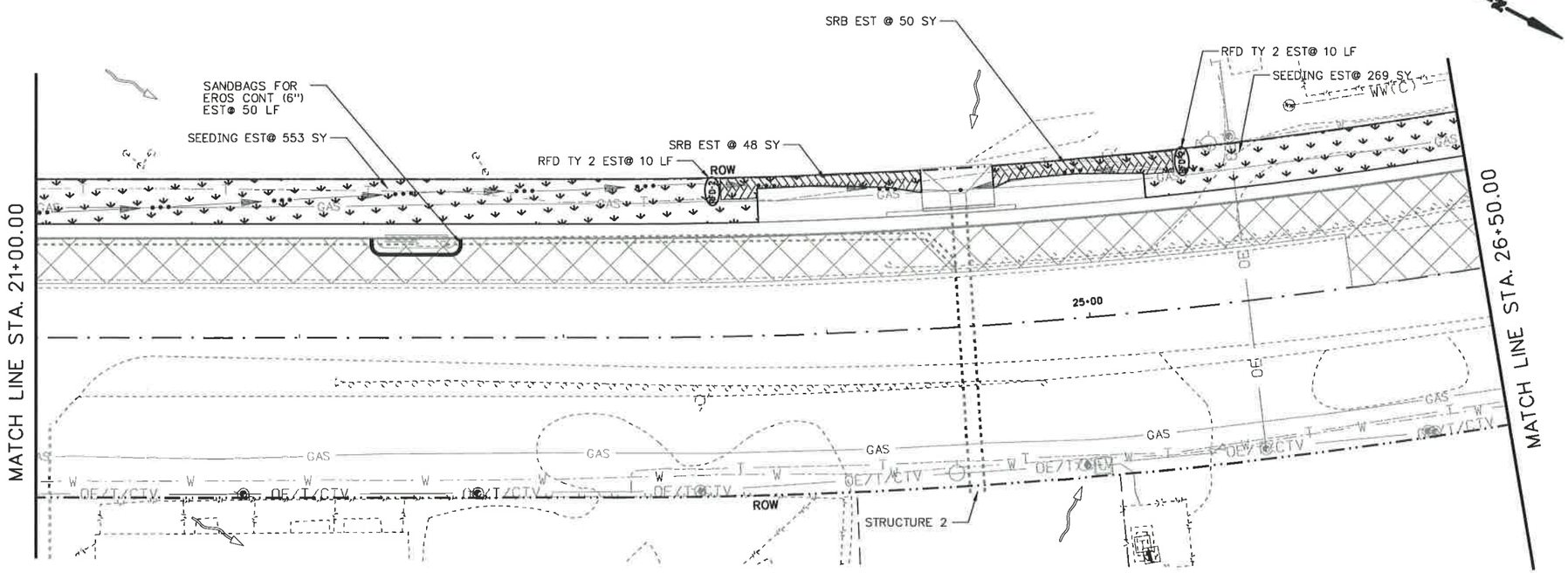

25 12.5 0 25 50
HORIZ. SCALE FEET

LEGEND

- WORKZONE
- TEMP DETOUR
- ROCK FILTER DAM (RFD)
- SEDIMENT CONTROL FENCE (SCF)
- DITCH FLOW LINE
- OVERALL DRAINAGE FLOW
- SEEDING
- SOIL RETENTION BLANKET (SRB)
- SANDBAGS FOR EROSION CONTROL

NOTES:
1. CONSTRUCTION EXITS (TY1) TO BE LOCATED IN THE FIELD AND APPROVED BY THE ENGINEER. THE SIZE OF THE CONSTRUCTION EXITS WILL BE 78 SY EACH (50' X 14'). REFER TO STATE STANDARD "EC(3)-93" FOR DETAILS.

STATE OF TEXAS
STEVEN D. TEMPLER
88656
LICENSED
PROFESSIONAL ENGINEER

STEVEN D. TEMPLER P.E. 12-09-2007
DATE

NO.	REVISION	BY	DATE

CP&Y Chiang, Patel & Yerby, Inc.

TEDSI INFRASTRUCTURE GROUP
Consulting Engineers
10999 IH 10 West • Suite 320
San Antonio, Texas 78230
(210) 858-0610

BEXAR COUNTY
PUBLIC WORKS DIVISION

F.M. 2696 (BLANCO ROAD)

SW3P LAYOUT

PHASE 2 STAGE 1
STA 15+50.00 TO STA 26+50.00
SHEET 2 OF 5

Designed: CA	STATE	BEXAR COUNTY FILE NUMBER	PLAN SET NO.
Checked: SDT	TEXAS		790
Drawn: SS	COUNTY		OF
Checked: SDT	BEXAR		842

p:\2007\27958-1 blanco rd south\design\cs\ENVIRONMENTAL\Phase II\6102TSSW3P_P2_S1-02.dgn
12/9/2007 11:26:54 AM

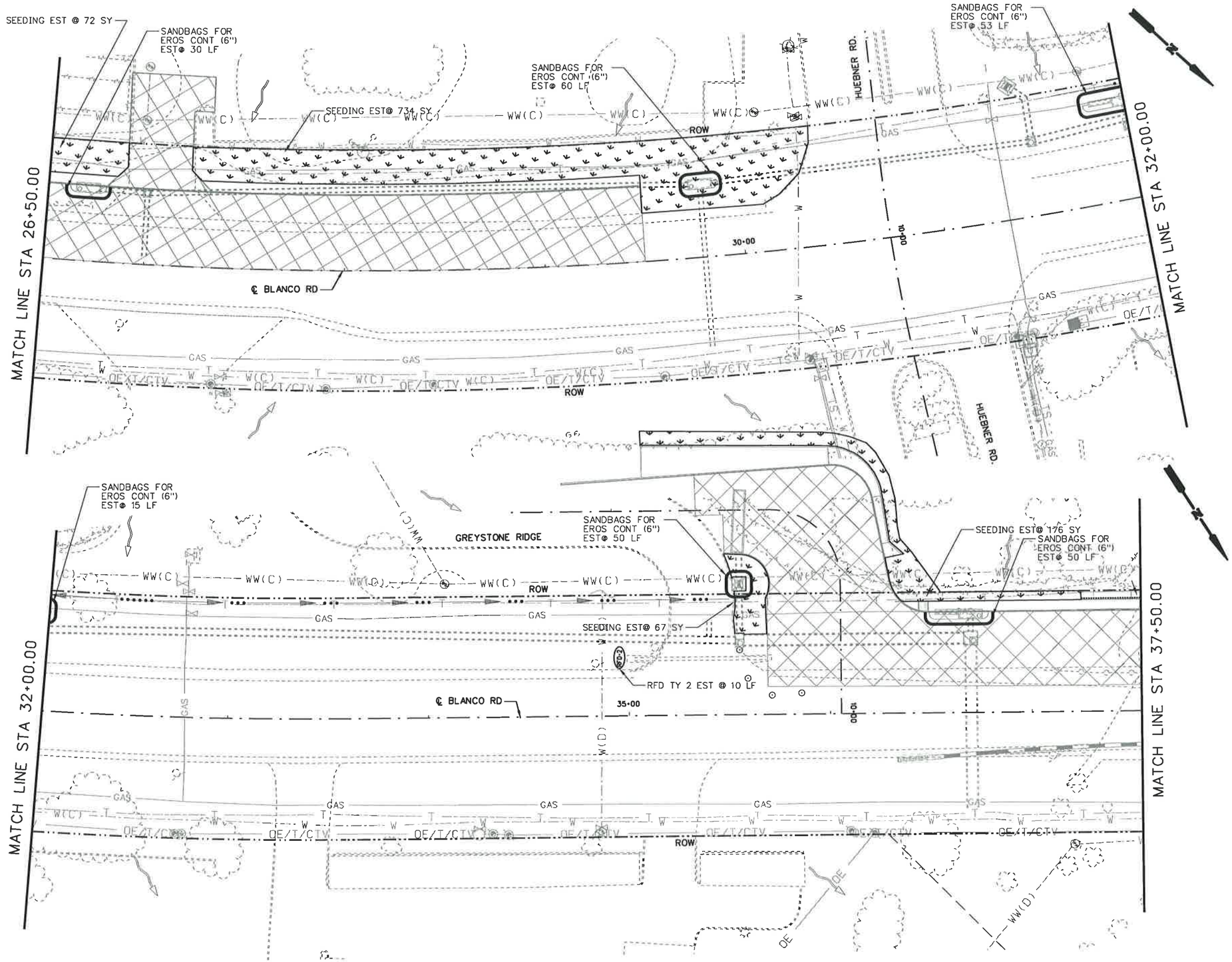

25 12.5 0 25 50
HORIZ. SCALE FEET

LEGEND

- WORKZONE
- TEMP DETOUR
- ROCK FILTER DAM (RFD)
- SEDIMENT CONTROL FENCE (SCF)
- DITCH FLOW LINE
- OVERALL DRAINAGE FLOW
- SEEDING
- SOIL RETENTION BLANKET (SRB)
- SANDBAGS FOR EROSION CONTROL

NOTES:
1. CONSTRUCTION EXITS (TY1) TO BE LOCATED IN THE FIELD AND APPROVED BY THE ENGINEER. THE SIZE OF THE CONSTRUCTION EXITS WILL BE 78 SY EACH (50' X 14'). REFER TO STATE STANDARD "EC(3)-93" FOR DETAILS.

STATE OF TEXAS
STEVEN D. TEMPLER
88656
LICENSED
PROFESSIONAL ENGINEER

STEVEN D. TEMPLER P.E. 12-09-2007
DATE

NO.	REVISION	BY	DATE

CP&Y Chiang, Patel & Yerby, Inc.

TEDSI INFRASTRUCTURE GROUP
Consulting Engineers
10999 IH 10 West • Suite 330
San Antonio, Texas 78230
(210) 858-0610

BEXAR COUNTY
PUBLIC WORKS DIVISION

F.M. 2696 (BLANCO ROAD)

SW3P LAYOUT

PHASE 2 STAGE 1
STA 26+50.00 TO STA 37+50.00

SHEET 3 OF 5

Designed: CA	STATE	BEXAR COUNTY FILE NUMBER	PLAN SET NO.
Checked: SDT	TEXAS		791
Drawn: SS	COUNTY		OF
Checked: SDT	BEXAR		842

p:\2007\27958-1 blanco rd south\design\cs\ENVIRONMENTAL\Phase II\61021SSW3P_P2_S1-03.dgn
12/9/2007 11:26:56 AM

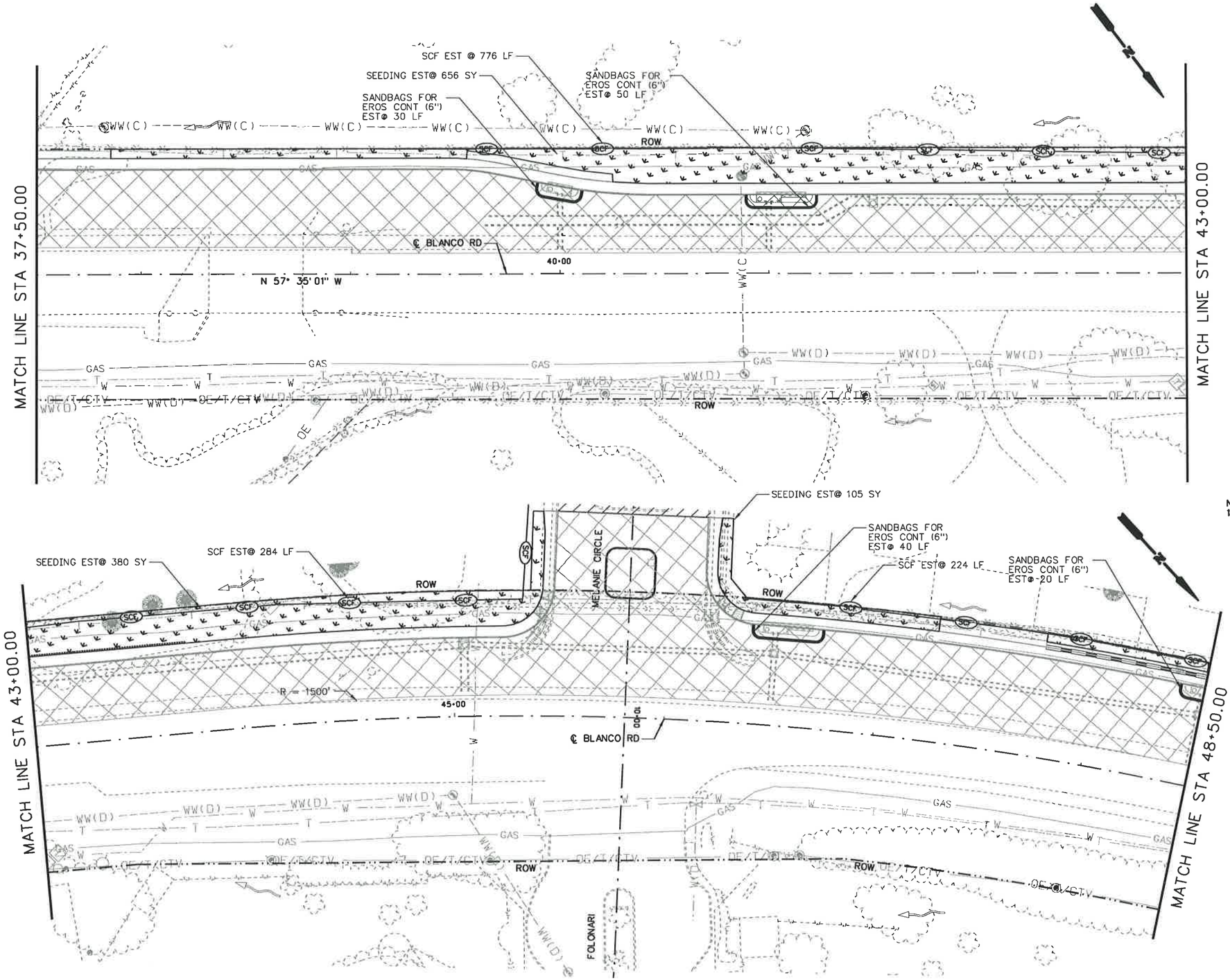

25 12.5 0 25 50
HORIZ. SCALE FEET

LEGEND

- WORKZONE
- TEMP DETOUR
- ROCK FILTER DAM (RFD)
- SEDIMENT CONTROL FENCE (SCF)
- DITCH FLOW LINE
- OVERALL DRAINAGE FLOW
- SEEDING
- SOIL RETENTION BLANKET (SRB)
- SANDBAGS FOR EROSION CONTROL

NOTES:
1. CONSTRUCTION EXITS (TY1) TO BE LOCATED IN THE FIELD AND APPROVED BY THE ENGINEER. THE SIZE OF THE CONSTRUCTION EXITS WILL BE 78 SY EACH (50' X 14'). REFER TO STATE STANDARD "EC(3)-93" FOR DETAILS.

STATE OF TEXAS
STEVEN D. TEMPLER
88656
LICENSED
PROFESSIONAL ENGINEER

STEVEN D. TEMPLER P.E. 12-09-2007
DATE

NO.	REVISION	BY	DATE

CP&Y Chiang, Patel & Yerby, Inc.

TEDSI INFRASTRUCTURE GROUP
Consulting Engineers
10999 IH 10 West • Suite 330
San Antonio, Texas 78230
(210) 858-0610

BEXAR COUNTY
PUBLIC WORKS DIVISION

F.M. 2696 (BLANCO ROAD)

SW3P LAYOUT

PHASE 2 STAGE 1
STA 37+50.00 TO STA 48+50.00
SHEET 4 OF 5

Designed: CA	STATE	BEXAR COUNTY FILE NUMBER	PLAN SET NO. 79B
Checked: SDT	TEXAS		OF
Drawn: SS	COUNTY		842
Checked: SDT	BEXAR		

p:\2007\27958-1 blanco rd south\design\cs\ENVIRONMENTAL\Phase IV\6102TSSW3P_P2_S1-04.dgn
12/9/2007 11:26:59 AM

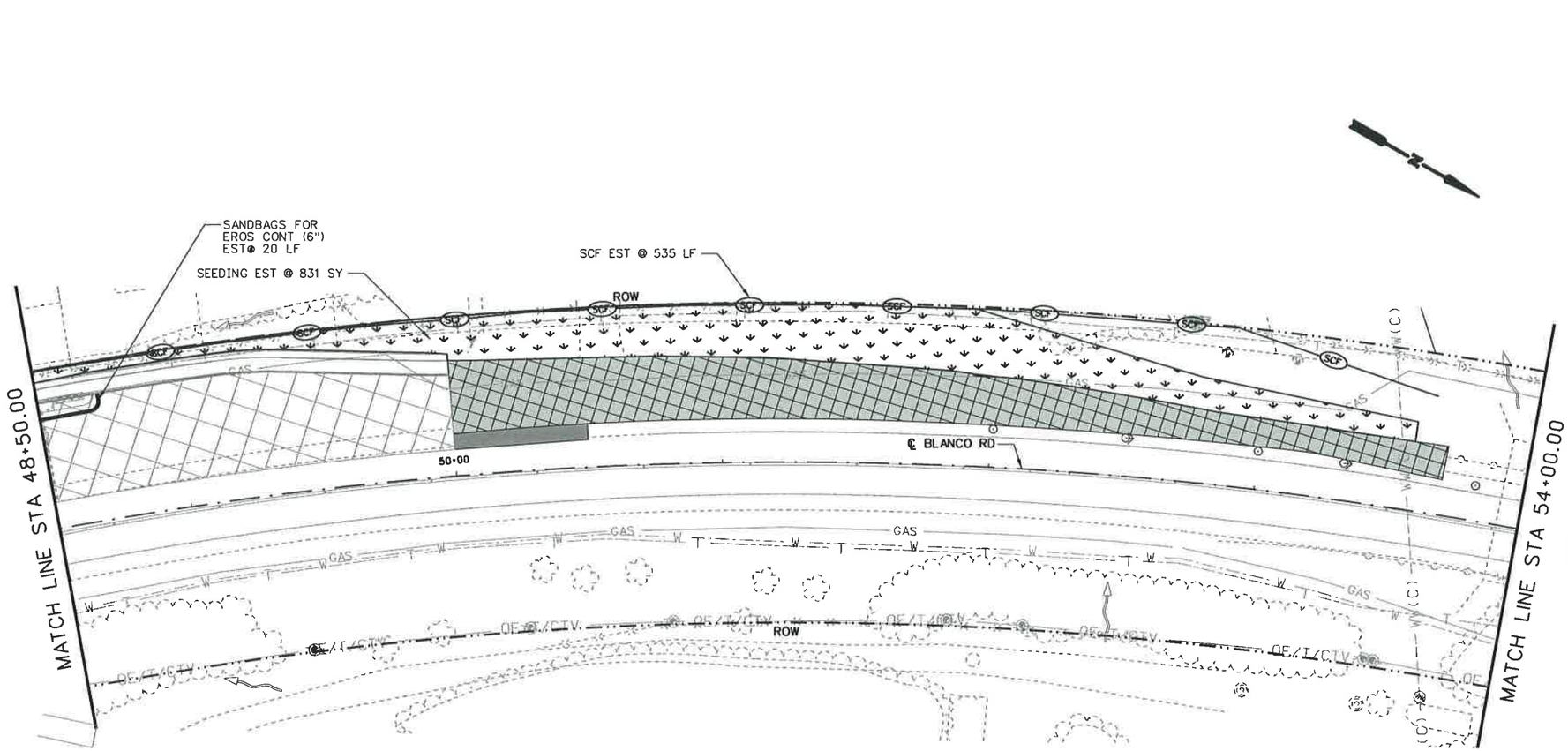

25 12.5 0 25 50
HORIZ. SCALE FEET

LEGEND

- WORKZONE
- TEMP DETOUR
- ROCK FILTER DAM (RFD)
- SEDIMENT CONTROL FENCE (SCF)
- DITCH FLOW LINE
- OVERALL DRAINAGE FLOW
- SEEDING
- SOIL RETENTION BLANKET (SRB)
- SANDBAGS FOR EROSION CONTROL

NOTES:
1. CONSTRUCTION EXITS (TY1) TO BE LOCATED IN THE FIELD AND APPROVED BY THE ENGINEER. THE SIZE OF THE CONSTRUCTION EXITS WILL BE 78 SY EACH (50' X 14'). REFER TO STATE STANDARD "EC(3)-93" FOR DETAILS.

STATE OF TEXAS
STEVEN D. TEMPLER
88656
LICENSED
PROFESSIONAL ENGINEER

STEVEN D. TEMPLER P.E. 12-09-2007
STEVEN D. TEMPLER DATE

NO.	REVISION	BY	DATE

CP&Y Chiang, Patel & Yerby, Inc.

TEDSI INFRASTRUCTURE GROUP
Consulting Engineers
10999 IH 10 West • Suite 320
San Antonio, Texas 78230
(210) 858-0610

BEXAR COUNTY
PUBLIC WORKS DIVISION

F.M. 2696 (BLANCO ROAD)

SW3P LAYOUT

PHASE 2 STAGE 1

STA 48+50.00 TO STA 59+50.00

SHEET 5 OF 5

Designed: CA	STATE	BEXAR COUNTY FILE NUMBER	PLAN SET NO.
Checked: SDT	TEXAS		793
Drawn: SS	COUNTY		OF
Checked: SDT	BEXAR		842

p:\2007\27958-1 blanco rd south\design\csj\ENVIRONMENTAL\Phase IN\61021SSW3P_P2_S1-05.dgn
12/9/2007 11:27:01 AM

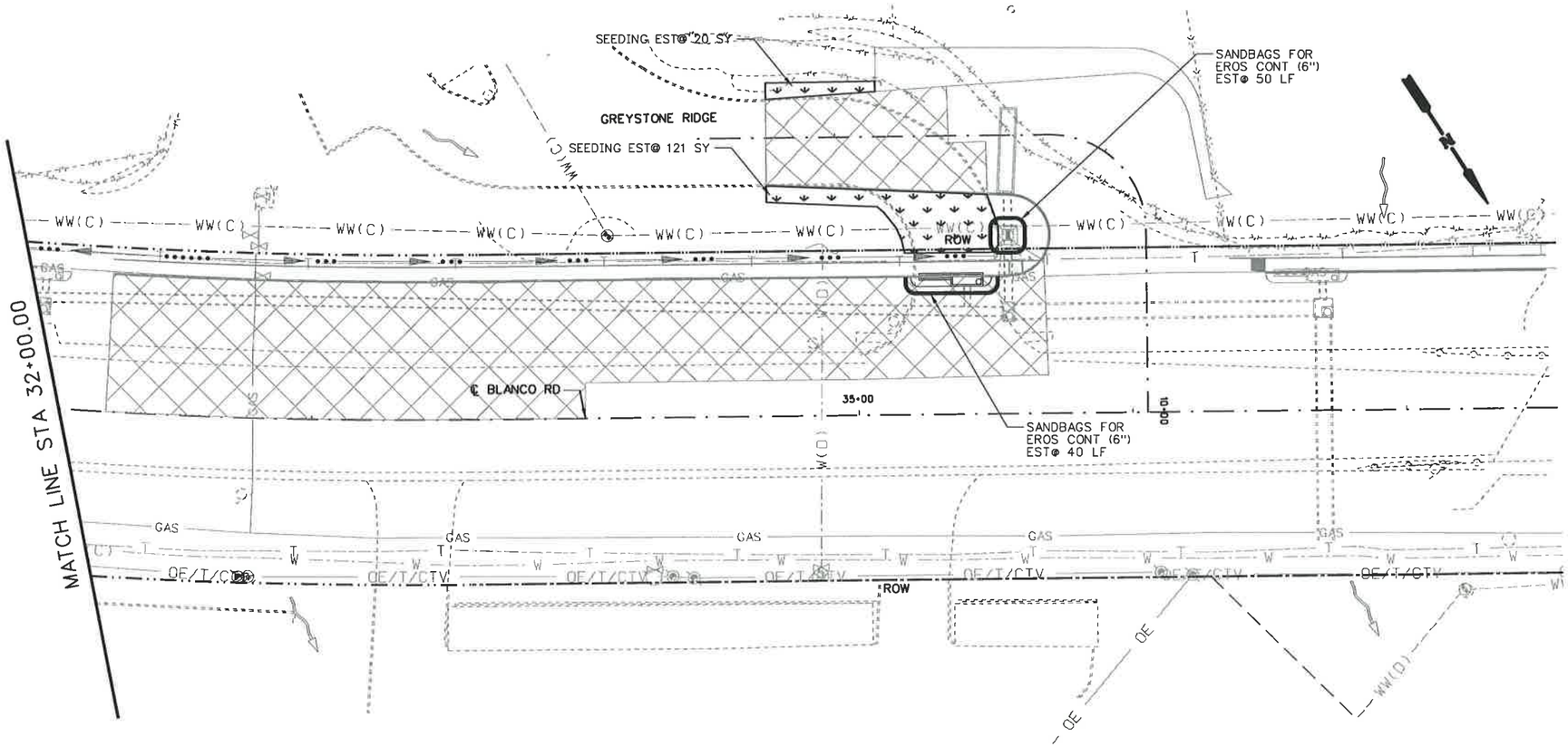

25 12.5 0 25 50
HORIZ. SCALE FEET

LEGEND

- WORKZONE
- TEMP DETOUR
- ROCK FILTER DAM (RFD)
- SEDIMENT CONTROL FENCE (SCF)
- DITCH FLOW LINE
- OVERALL DRAINAGE FLOW
- SEEDING
- SOIL RETENTION BLANKET (SRB)
- SANDBAGS FOR EROSION CONTROL

NOTES:
1. CONSTRUCTION EXITS (TY1) TO BE LOCATED IN THE FIELD AND APPROVED BY THE ENGINEER. THE SIZE OF THE CONSTRUCTION EXITS WILL BE 78 SY EACH (50' X 14'). REFER TO STATE STANDARD "EC(3)-93" FOR DETAILS.

STATE OF TEXAS
STEVEN D. TEMPLER
88656
LICENSED
PROFESSIONAL ENGINEER

STEVEN D. TEMPLER P.E. 12-9-2007
DATE

NO.	REVISION	BY	DATE

CP&Y Chiang, Patel & Yerby, Inc.

TEDSI INFRASTRUCTURE GROUP
Consulting Engineers
10999 IH 10 West • Suite 320
San Antonio, Texas 78230
(210) 858-0610

BEXAR COUNTY
PUBLIC WORKS DIVISION

F.M. 2696 (BLANCO ROAD)

SW3P LAYOUT
PHASE 2 STAGE 2
STA 26+50.00 TO STA 37+50.00

SHEET 1 OF 1

Designed: CA	STATE	BEXAR COUNTY FILE NUMBER	PLAN SET NO.
Checked: SDT	TEXAS		79
Drawn: SS	COUNTY		OF
Checked: SDT	BEXAR		842

P:\2007\27958-1 Blanco Rd South\DESIGN\CSJ\ENVIRONMENTAL\Phase IV\6102TSSW3P_P2_S2-01.DGN
12/9/2007 12:02:18 PM

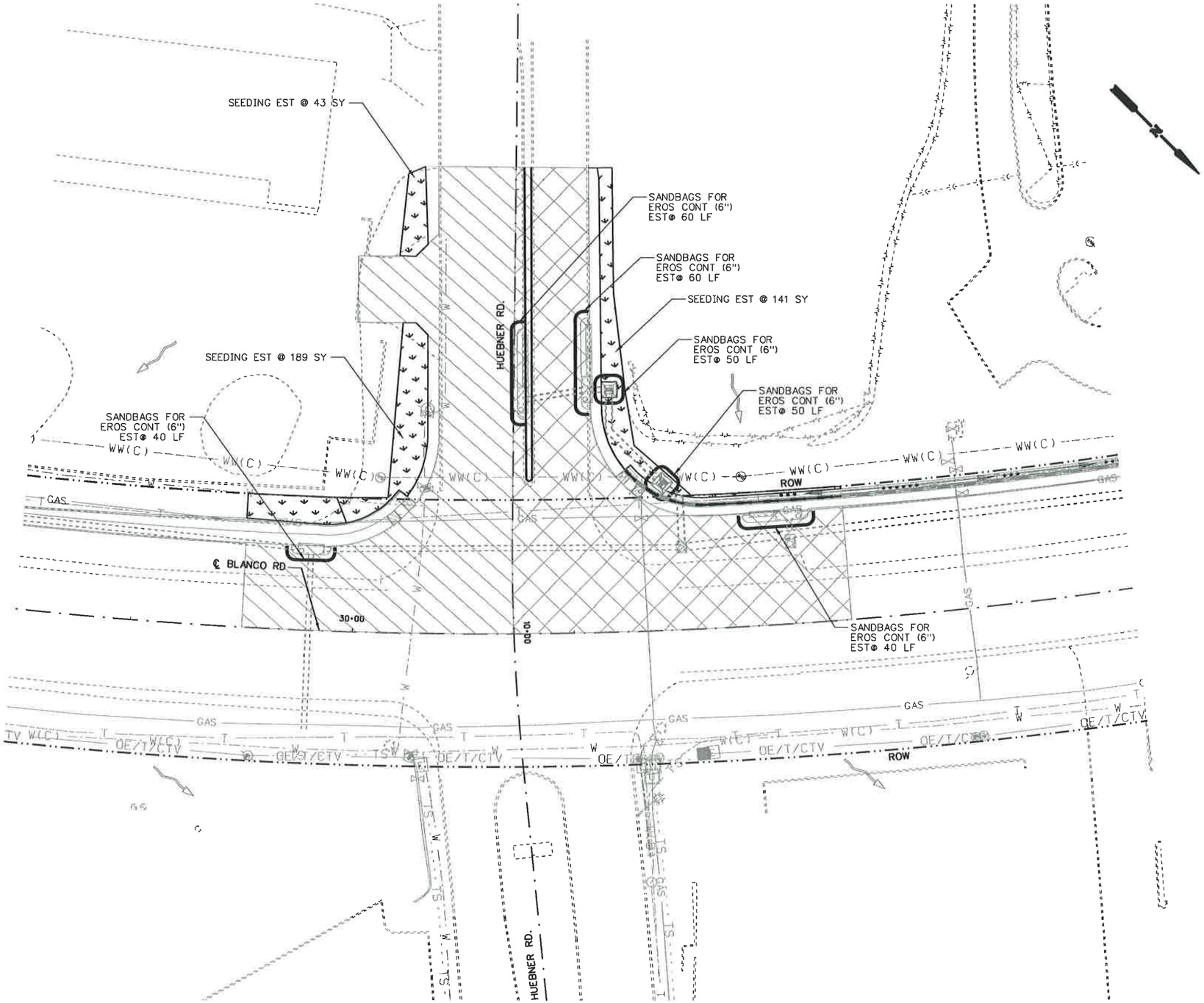

25 12.5 0 25 50
HORIZ. SCALE FEET

LEGEND

- WORKZONE
- TEMP DETOUR
- ROCK FILTER DAM (RFD)
- SEDIMENT CONTROL FENCE (SCF)
- DITCH FLOW LINE
- OVERALL DRAINAGE FLOW
- SEEDING
- SOIL RETENTION BLANKET (SRB)
- SANDBAGS FOR EROSION CONTROL

NOTES:
1. CONSTRUCTION EXITS (TY1) TO BE LOCATED IN THE FIELD AND APPROVED BY THE ENGINEER. THE SIZE OF THE CONSTRUCTION EXITS WILL BE 78 SY EACH (50' X 14'). REFER TO STATE STANDARD "EC(3)-93" FOR DETAILS.

STATE OF TEXAS
STEVEN D. TEMPLER
88656
LICENSED
PROFESSIONAL ENGINEER

STEVEN D. TEMPLER P.E. 12-09-2007
DATE

NO.	REVISION	BY	DATE

CP&Y Chiang, Patel & Yerby, Inc.

TEDSI INFRASTRUCTURE GROUP
Consulting Engineers
10999 IH 10 West • Suite 320
San Antonio, Texas 78230
(210) 858-0610

BEXAR COUNTY
PUBLIC WORKS DIVISION

F.M. 2696 (BLANCO ROAD)

SW3P LAYOUT

PHASE 2 STAGE 3
STA 26+50.00 TO STA 37+50.00

SHEET 1 OF 1

Designed: CA	STATE	BEXAR COUNTY FILE NUMBER	PLAN SET NO.
Checked: SDT	TEXAS		775
Drawn: SS	COUNTY		OF
Checked: SDT	BEXAR		842

p:\2007\27958-1 blanco rd south\design\csj\ENVIRONMENTAL\Phase II\6102TSSW3P_P2_S3-01.dgn
12/9/2007 11:27:04 AM

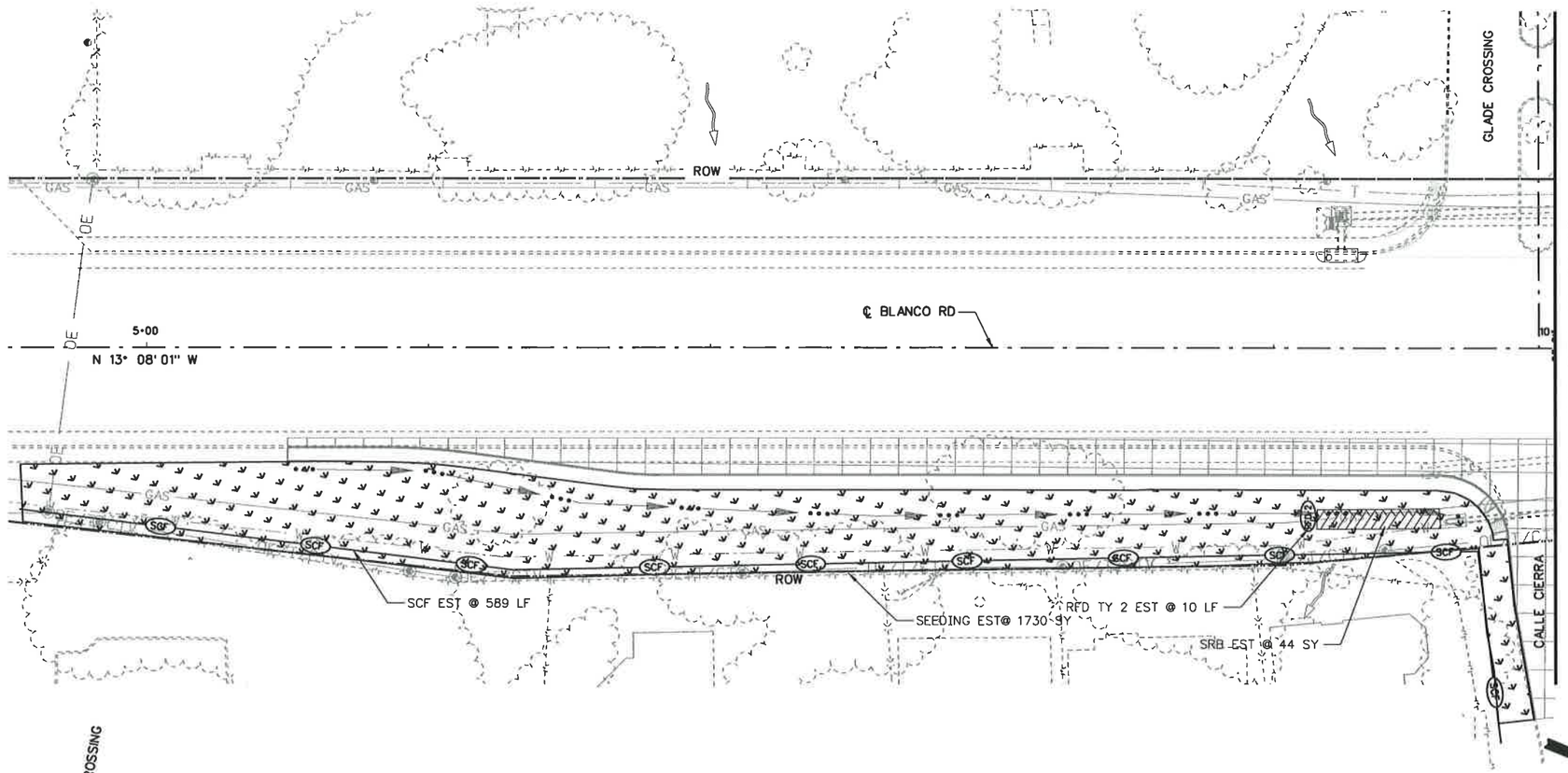

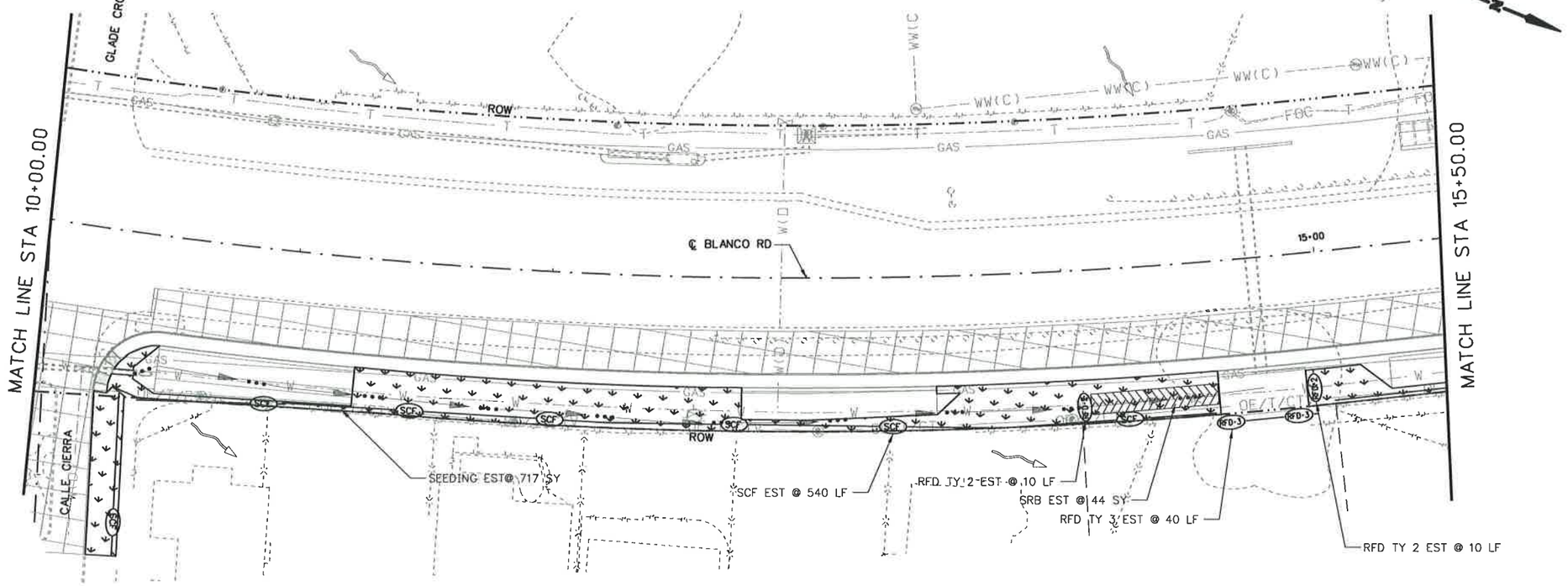

25 12.5 0 25 50
HORIZ. SCALE FEET

LEGEND

- WORKZONE
- TEMP DETOUR
- ROCK FILTER DAM (RFD)
- SEDIMENT CONTROL FENCE (SCF)
- DITCH FLOW LINE
- OVERALL DRAINAGE FLOW
- SEEDING
- SOIL RETENTION BLANKET (SRB)
- SANDBAGS FOR EROSION CONTROL

NOTES:
1. CONSTRUCTION EXITS (TY1) TO BE LOCATED IN THE FIELD AND APPROVED BY THE ENGINEER. THE SIZE OF THE CONSTRUCTION EXITS WILL BE 78 SY EACH (50' X 14'). REFER TO STATE STANDARD "EC(3)-93" FOR DETAILS.

STATE OF TEXAS
STEVEN D. TEMPLER
88656
LICENSED
PROFESSIONAL ENGINEER

STEVEN D. TEMPLER P.E. 12-9-2007
DATE

NO.	REVISION	BY	DATE

CP&Y Chiang, Patel & Yerby, Inc.

TEDSI INFRASTRUCTURE GROUP
Consulting Engineers
10999 IH 10 West • Suite 320
San Antonio, Texas 78230
(210) 858-6610

BEXAR COUNTY
PUBLIC WORKS DIVISION

F.M. 2696 (BLANCO ROAD)

SW3P LAYOUT

PHASE 2 STAGE 4
STA 4+50.00 TO STA 15+50.00

SHEET 1 OF 5

Designed: CA	STATE	BEXAR COUNTY FILE NUMBER	PLAN SET NO. 796
Checked: SDT	TEXAS		
Drawn: SS	COUNTY		OF 842
Checked: SDT	BEXAR		

p:\2007\27958-1 blanco rd south\design\cs\ENVIRONMENTAL\Phase 1\6102TSSW3P_P2_S4-01.DGN
12/9/2007 11:27:06 AM

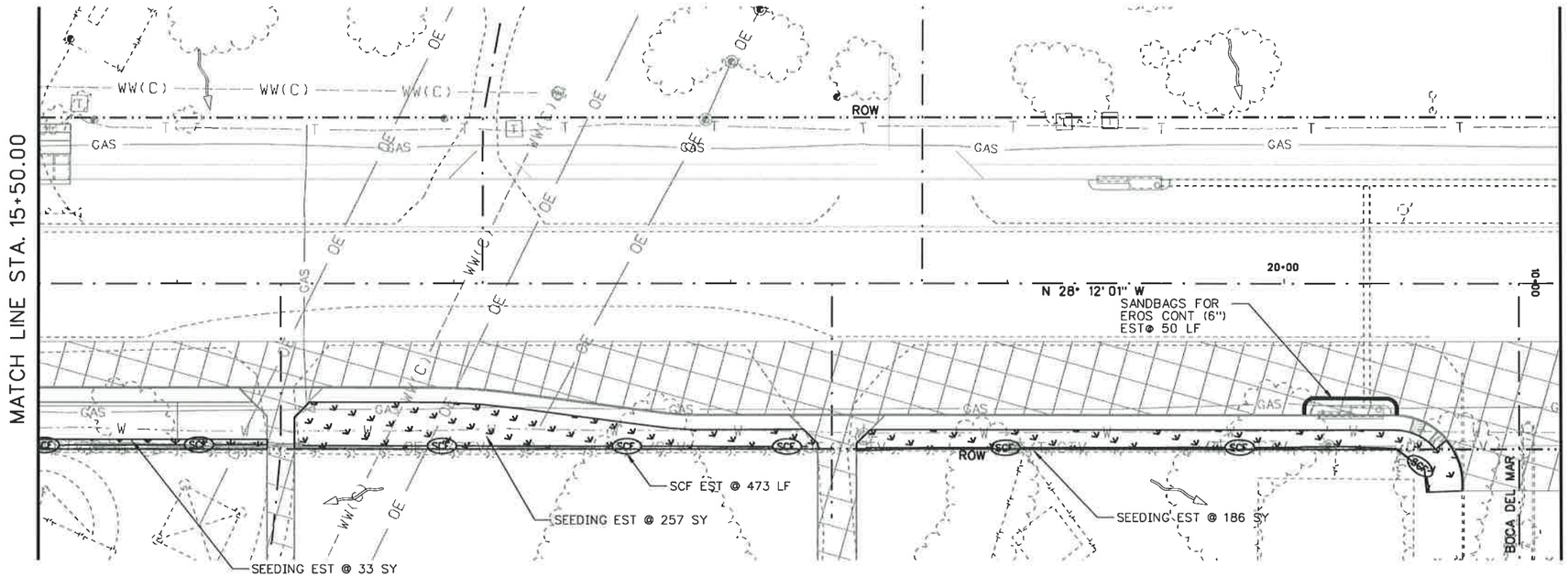

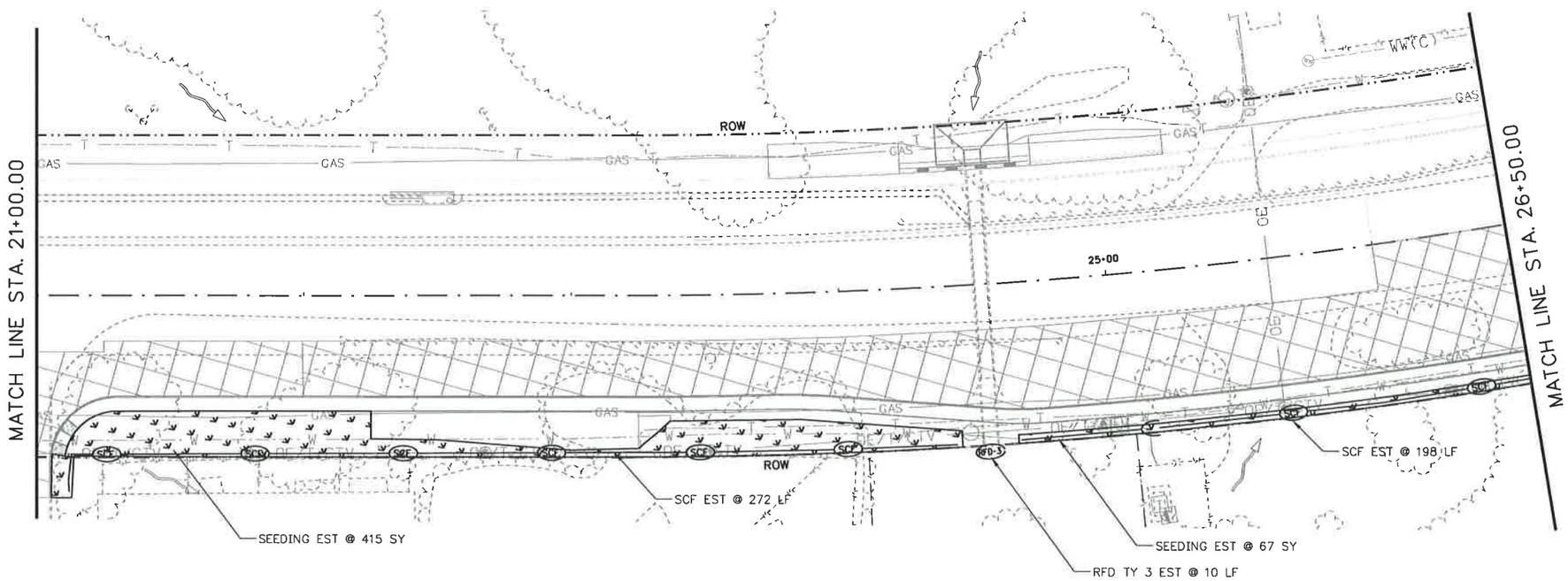

25 12.5 0 25 50
HORIZ. SCALE FEET

LEGEND

- WORKZONE
- TEMP DETOUR
- ROCK FILTER DAM (RFD)
- SEDIMENT CONTROL FENCE (SCF)
- DITCH FLOW LINE
- OVERALL DRAINAGE FLOW
- SEEDING
- SOIL RETENTION BLANKET (SRB)
- SANDBAGS FOR EROSION CONTROL

NOTES:
1. CONSTRUCTION EXITS (TY1) TO BE LOCATED IN THE FIELD AND APPROVED BY THE ENGINEER. THE SIZE OF THE CONSTRUCTION EXITS WILL BE 78 SY EACH (50' X 14'). REFER TO STATE STANDARD "EC(3)-93" FOR DETAILS.

STATE OF TEXAS
STEVEN D. TEMPLER
88656
LICENSED
PROFESSIONAL ENGINEER

STEVEN D. TEMPLER — R.D. 12-09-2007 DATE

NO.	REVISION	BY	DATE

CP&Y Chiang, Patel & Yerby, Inc.

TEDSI INFRASTRUCTURE GROUP
Consulting Engineers
10999 IH 10 West • Suite 320
San Antonio, Texas 78230
(210) 858-8610

BEXAR COUNTY
PUBLIC WORKS DIVISION

F.M. 2696 (BLANCO ROAD)

SW3P LAYOUT

PHASE 2 STAGE 4
STA 15+50.00 TO STA 26+50.00

SHEET 2 OF 5

Designed: CA	STATE	BEXAR COUNTY FILE NUMBER	PLAN SET NO. 797
Checked: SDT	TEXAS		OF
Drawn: SS	COUNTY		842
Checked: SDT	BEXAR		

p:\2007\27958-1 blanco rd south\design\csj\ENVIRONMENTAL\Phase IV\6102TSSW3P_P2_S4-02.dgn
12/9/2007 11:27:09 AM

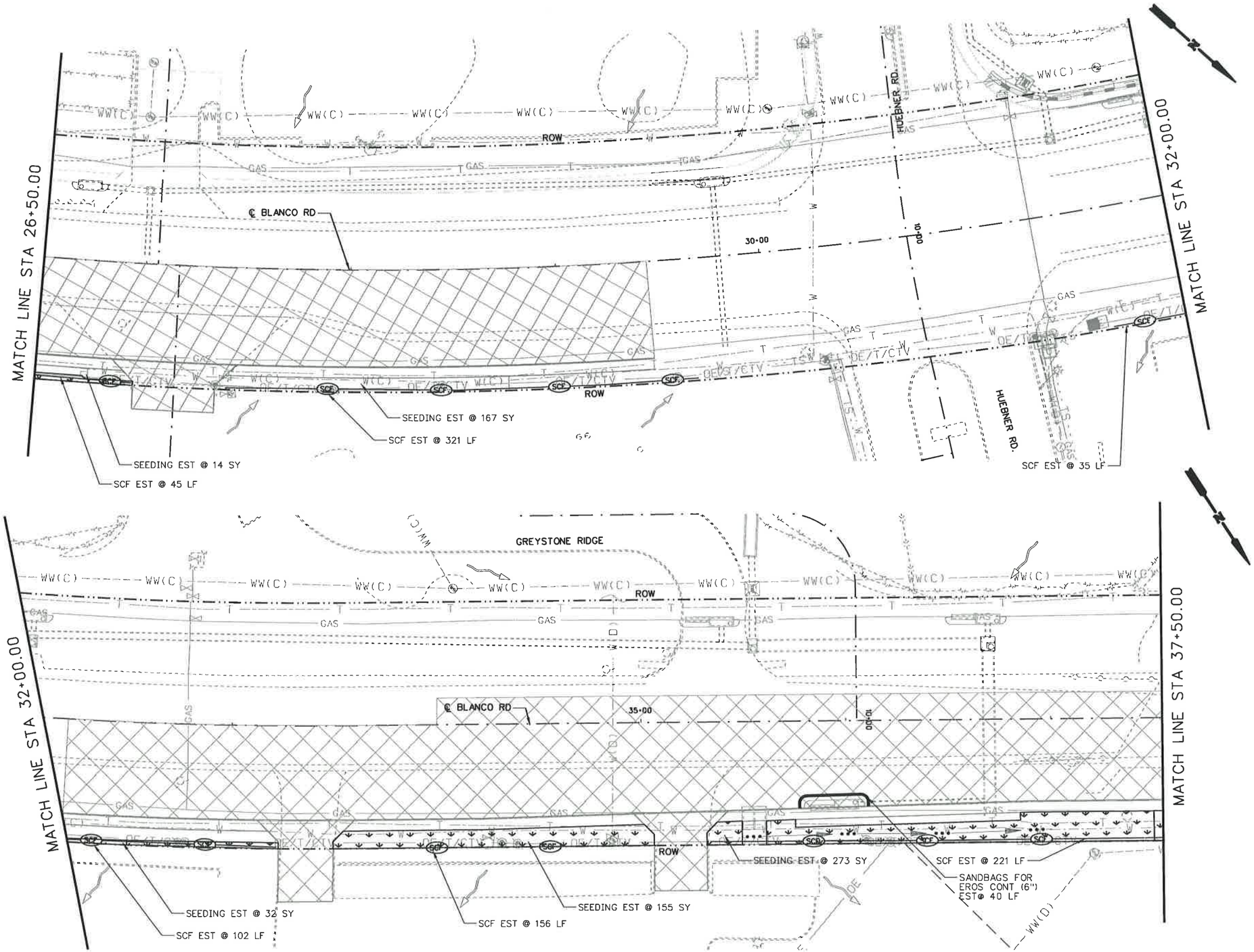

25 12.5 0 25 50
HORIZ. SCALE FEET

LEGEND

- WORKZONE
- TEMP DETOUR
- ROCK FILTER DAM (RFD)
- SEDIMENT CONTROL FENCE (SCF)
- DITCH FLOW LINE
- OVERALL DRAINAGE FLOW
- SEEDING
- SOIL RETENTION BLANKET (SRB)
- SANDBAGS FOR EROSION CONTROL

NOTES:
1. CONSTRUCTION EXITS (TY1) TO BE LOCATED IN THE FIELD AND APPROVED BY THE ENGINEER. THE SIZE OF THE CONSTRUCTION EXITS WILL BE 78 SY EACH (50' X 14'). REFER TO STATE STANDARD "EC(3)-93" FOR DETAILS.

STATE OF TEXAS
STEVEN D. TEMPLER
88656
LICENSED
PROFESSIONAL ENGINEER

STEVEN D. TEMPLER P.E. 12-09-2007
DATE

NO.	REVISION	BY	DATE

CP&Y Chiang, Patel & Yerby, Inc.

TEDSI INFRASTRUCTURE GROUP
Consulting Engineers
10999 IH 10 West • Suite 320
San Antonio, Texas 78230
(210) 858-0610

BEXAR COUNTY
PUBLIC WORKS DIVISION

F.M. 2696 (BLANCO ROAD)

SW3P LAYOUT

PHASE 2 STAGE 4
STA 26+50.00 TO STA 37+50.00
SHEET 3 OF 5

Designed: CA	STATE	BEXAR COUNTY FILE NUMBER	PLAN SET NO.
Checked: SDT	TEXAS		798
Drawn: SS	COUNTY		OF
Checked: SDT	BEXAR		842

p:\2007\27958-1 blanco rd south\design\csj\ENVIRONMENTAL\Phase II\6102TSSW3P_P2_S4-03.050
12/9/2007 11:27:10 AM

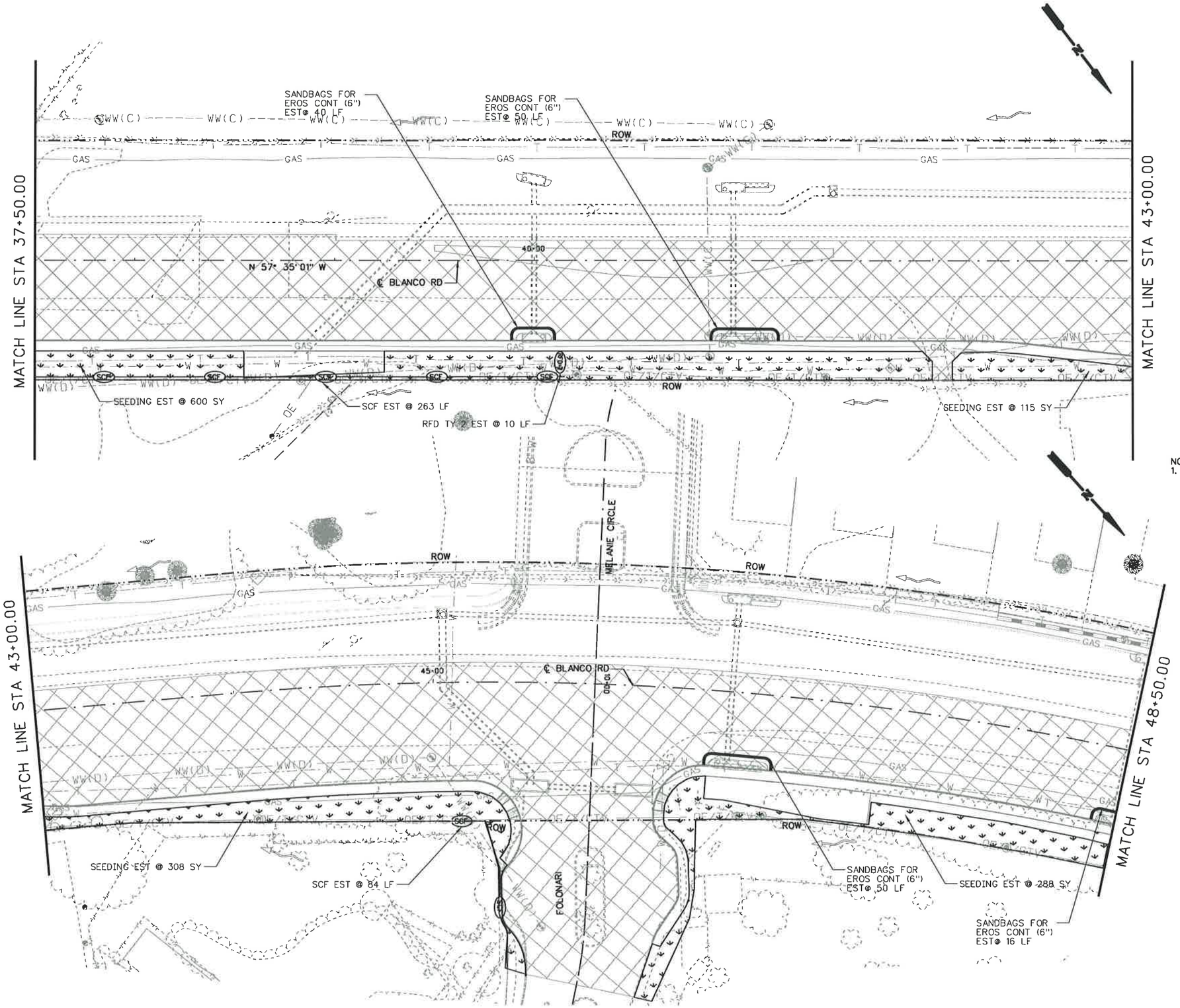

25 12.5 0 25 50
HORIZ. SCALE FEET

LEGEND

- WORKZONE
- TEMP DETOUR
- ROCK FILTER DAM (RFD)
- SEDIMENT CONTROL FENCE (SCF)
- DITCH FLOW LINE
- OVERALL DRAINAGE FLOW
- SEEDING
- SOIL RETENTION BLANKET (SRB)
- SANDBAGS FOR EROSION CONTROL

NOTES:
1. CONSTRUCTION EXITS (TY1) TO BE LOCATED IN THE FIELD AND APPROVED BY THE ENGINEER. THE SIZE OF THE CONSTRUCTION EXITS WILL BE 78 SY EACH (50' X 14'). REFER TO STATE STANDARD "EC(3)-93" FOR DETAILS.

STATE OF TEXAS
STEVEN D. TEMPLER
88656
LICENSED
PROFESSIONAL ENGINEER

STEVEN D. TEMPLER P.E. 12.09.2007
DATE

NO.	REVISION	BY	DATE

CP&Y Chiang, Patel & Yerby, Inc.

TEDSI INFRASTRUCTURE GROUP
Consulting Engineers
10999 IH 10 West • Suite 320
San Antonio, Texas 78230
(210) 858-0610

BEXAR COUNTY
PUBLIC WORKS DIVISION

F.M. 2696 (BLANCO ROAD)

SW3P LAYOUT

PHASE 2 STAGE 4
STA 37+50.00 TO STA 48+50.00

SHEET 4 OF 5

Designed: CA	STATE	BEXAR COUNTY FILE NUMBER	PLAN SET NO. 799
Checked: SDT	TEXAS		
Drawn: SS	COUNTY		OF 842
Checked: SDT	BEXAR		

p:\2007\27958-1 blanco rd south\design\csj\ENVIRONMENTAL\Phase IV\6102TSSW3P_P2_S4-04.DGN
12/9/2007 11:27:12 AM

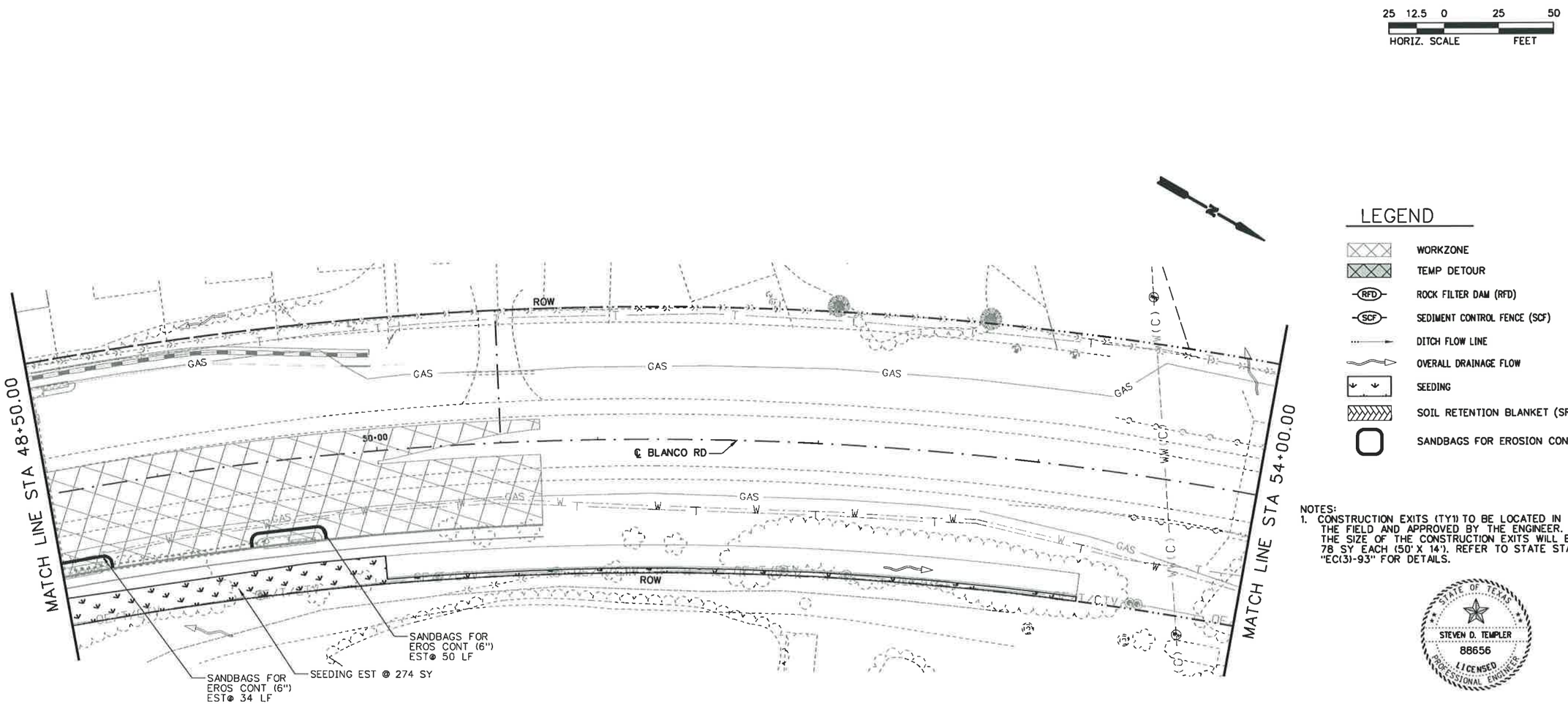

LEGEND

- WORKZONE
- TEMP DETOUR
- ROCK FILTER DAM (RFD)
- SEDIMENT CONTROL FENCE (SCF)
- DITCH FLOW LINE
- OVERALL DRAINAGE FLOW
- SEEDING
- SOIL RETENTION BLANKET (SRB)
- SANDBAGS FOR EROSION CONTROL

NOTES:
1. CONSTRUCTION EXITS (TY1) TO BE LOCATED IN THE FIELD AND APPROVED BY THE ENGINEER. THE SIZE OF THE CONSTRUCTION EXITS WILL BE 78 SY EACH (50' X 14'). REFER TO STATE STANDARD "EC(3)-93" FOR DETAILS.

STATE OF TEXAS
STEVEN D. TEMPLER
88656
LICENSED
PROFESSIONAL ENGINEER

STEVEN D. TEMPLER — 12-09-2007 DATE

NO.	REVISION	BY	DATE

CP&Y Chiang, Patel & Yerby, Inc.

TEDSI INFRASTRUCTURE GROUP
Consulting Engineers
10999 IH 10 West • Suite 320
San Antonio, Texas 78230
(210) 858-0610

BEXAR COUNTY
PUBLIC WORKS DIVISION

F.M. 2696 (BLANCO ROAD)

SW3P LAYOUT
PHASE 2 STAGE 4
STA 48+50.00 TO STA 59+50.00
SHEET 5 OF 5

Designed: CA	STATE	BEXAR COUNTY FILE NUMBER	PLAN SET NO. 800
Checked: SDT	TEXAS		
Drawn: SS	COUNTY		OF
Checked: SDT	BEXAR		842

p:\2007\27958-1 blanco rd south\design\csj\ENVIRONMENTAL\Phase II\6102TSSW3P_P2_S4-05.050
12/9/2007 11:27:15 AM

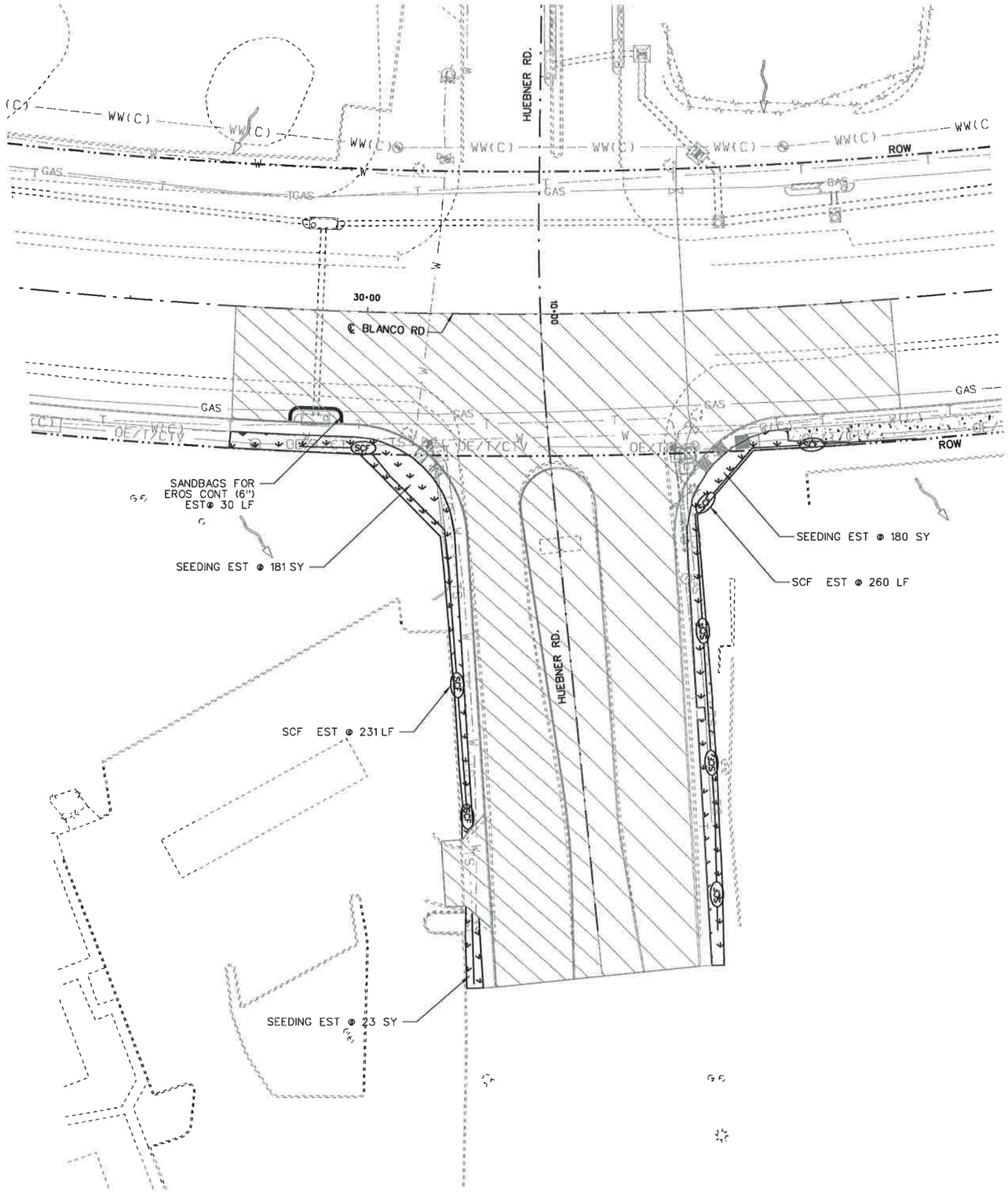

25 12.5 0 25 50
HORIZ. SCALE FEET

LEGEND

- WORKZONE
- TEMP DETOUR
- ROCK FILTER DAM (RFD)
- SEDIMENT CONTROL FENCE (SCF)
- DITCH FLOW LINE
- OVERALL DRAINAGE FLOW
- SEEDING
- SOIL RETENTION BLANKET (SRB)
- SANDBAGS FOR EROSION CONTROL

NOTES:
1. CONSTRUCTION EXITS (TY1) TO BE LOCATED IN THE FIELD AND APPROVED BY THE ENGINEER. THE SIZE OF THE CONSTRUCTION EXITS WILL BE 78 SY EACH (50' X 14'). REFER TO STATE STANDARD "EC(3)-93" FOR DETAILS.

STATE OF TEXAS
STEVEN D. TEMPLER
88656
LICENSED
PROFESSIONAL ENGINEER

STEVEN D. TEMPLER P.E. 12-09-2007
STEVEN D. TEMPLER DATE

NO.	REVISION	BY	DATE

CP&Y Chiang, Patel & Yerby, Inc.

TEDSI INFRASTRUCTURE GROUP
Consulting Engineers
10999 IH 10 West • Suite 320
San Antonio, Texas 78230
(210) 858-0610

BEXAR COUNTY
PUBLIC WORKS DIVISION

F.M. 2696 (BLANCO ROAD)

SW3P LAYOUT
PHASE 2 STAGE 5
STA 26+50.00 TO STA 37+50.00
SHEET 1 OF 1

Designed: CA	STATE	BEXAR COUNTY FILE NUMBER	PLAN SET NO.
Checked: SDT	TEXAS		801
Drawn: SS	COUNTY		OF
Checked: SDT	BEXAR		842

p:\2007\27958-1 blanco rd south\design\cs\ENVIRONMENTAL\Phase IN\61027SSW3P_P2_S5-01.DGN
12/9/2007 11:27:17 AM

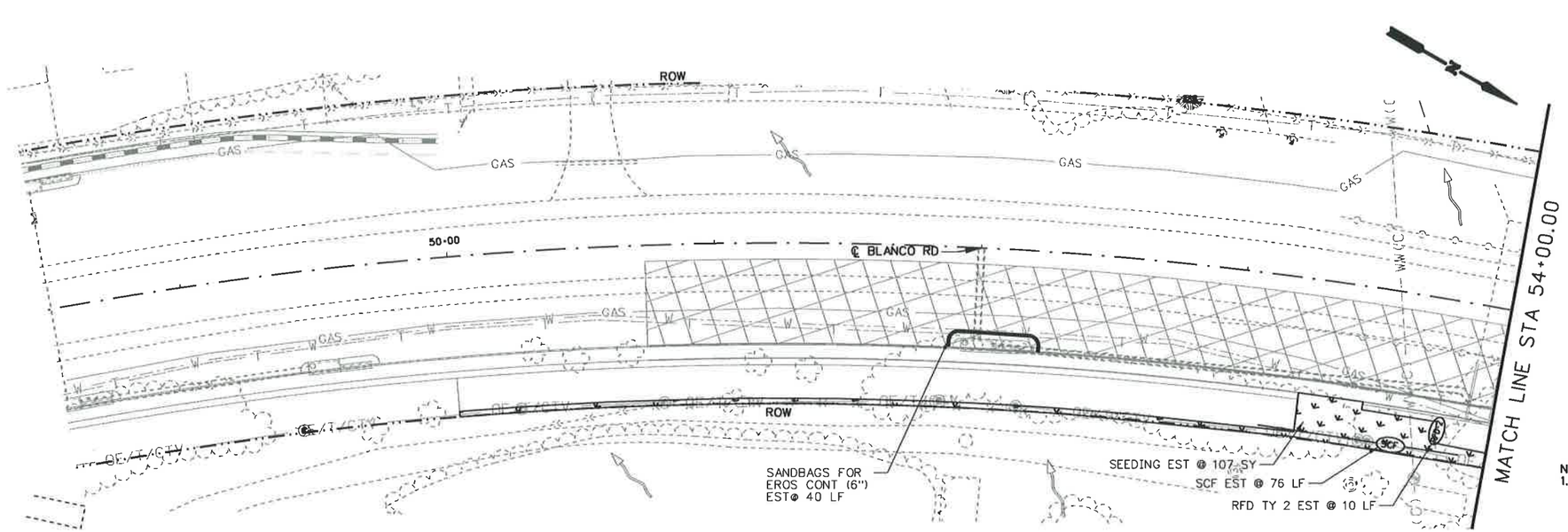

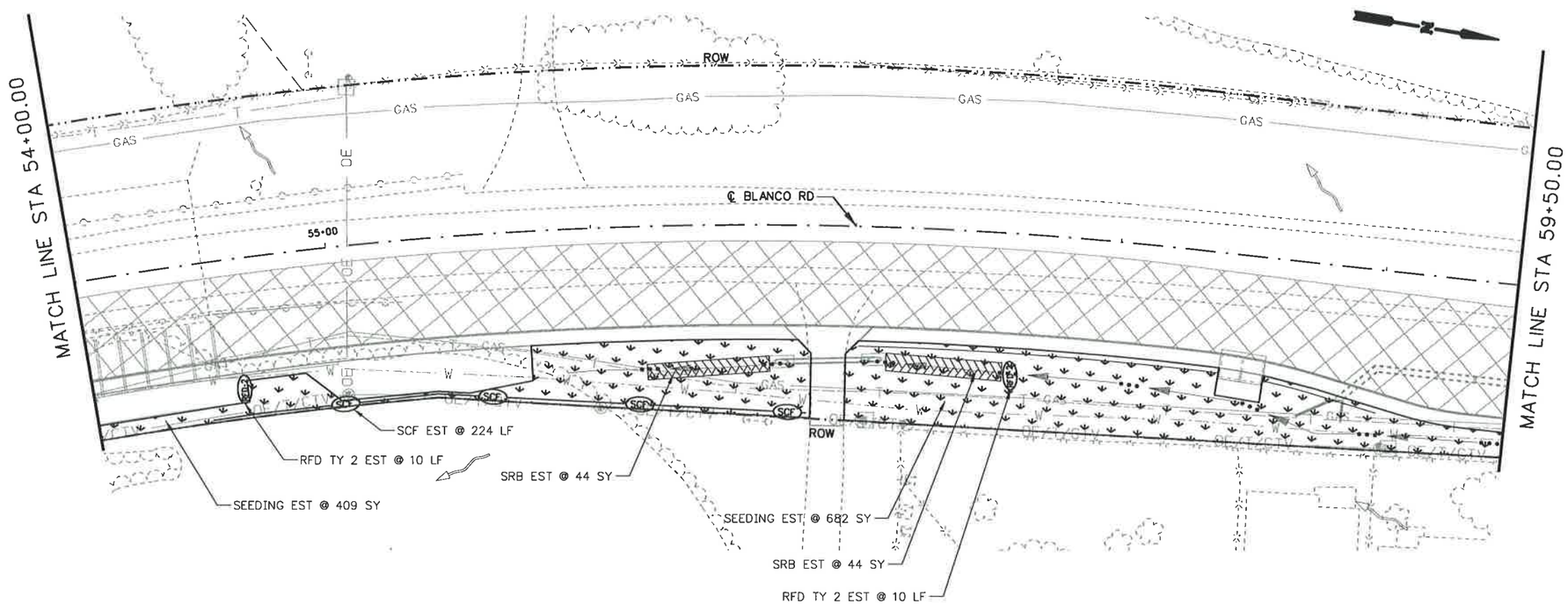

25 12.5 0 25 50
HORIZ. SCALE FEET

LEGEND

- WORKZONE
- TEMP DETOUR
- ROCK FILTER DAM (RFD)
- SEDIMENT CONTROL FENCE (SCF)
- DITCH FLOW LINE
- OVERALL DRAINAGE FLOW
- SEEDING
- SOIL RETENTION BLANKET (SRB)
- SANDBAGS FOR EROSION CONTROL

NOTES:
1. CONSTRUCTION EXITS (TY1) TO BE LOCATED IN THE FIELD AND APPROVED BY THE ENGINEER. THE SIZE OF THE CONSTRUCTION EXITS WILL BE 78 SY EACH (50' X 14'). REFER TO STATE STANDARD "EC(3)-93" FOR DETAILS.

STATE OF TEXAS
STEVEN D. TEMPLER
88656
LICENSED
PROFESSIONAL ENGINEER

STEVEN D. TEMPLER RC: 12.09.2007
DATE

NO.	REVISION	BY	DATE

CP&Y Chiang, Patel & Yerby, Inc.

TEDSI INFRASTRUCTURE GROUP
TEDSI
Consulting Engineers
10999 IH 10 West • Suite 320
San Antonio, Texas 78230
(210) 858-0610

BEXAR COUNTY
PUBLIC WORKS DIVISION

F.M. 2696 (BLANCO ROAD)

SW3P LAYOUT

PHASE 3 STAGE 1
STA 50+74.00 TO STA 59+50.00

SHEET 1 OF 5

Designed: CA	STATE	BEXAR COUNTY FILE NUMBER	PLAN SET NO. 862
Checked: SDT	TEXAS		
Drawn: SS	COUNTY		OF
Checked: SDT	BEXAR		842

p:\2007\27958-1 blanco rd south\design\csj\ENVIRONMENTAL\Phase III\6102TSSW3P_P3_S1-01.DGN
12/9/2007 11:29:07 AM

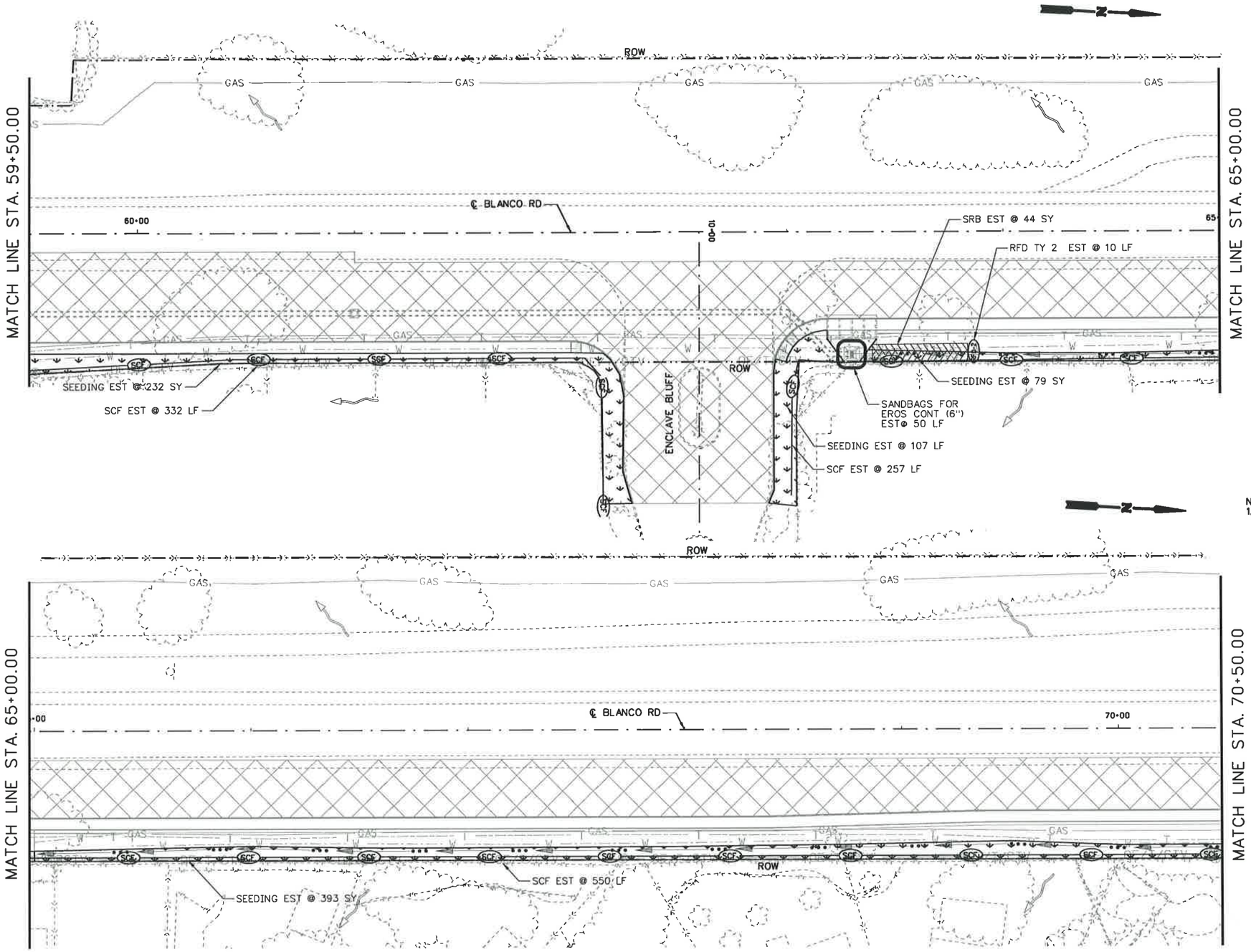

25 12.5 0 25 50
HORIZ. SCALE FEET

LEGEND

- WORKZONE
- TEMP DETOUR
- ROCK FILTER DAM (RFD)
- SEDIMENT CONTROL FENCE (SCF)
- DITCH FLOW LINE
- OVERALL DRAINAGE FLOW
- SEEDING
- SOIL RETENTION BLANKET (SRB)
- SANDBAGS FOR EROSION CONTROL

NOTES:
1. CONSTRUCTION EXITS (TY1) TO BE LOCATED IN THE FIELD AND APPROVED BY THE ENGINEER. THE SIZE OF THE CONSTRUCTION EXITS WILL BE 78 SY EACH (50' X 14'). REFER TO STATE STANDARD "EC(3)-93" FOR DETAILS.

STATE OF TEXAS
STEVEN D. TEMPLER
88656
LICENSED
PROFESSIONAL ENGINEER

STEVEN D. TEMPLER — 12-09-2007
DATE

NO.	REVISION	BY	DATE

CP&Y Chiang, Patel & Yerby, Inc.

TEDSI INFRASTRUCTURE GROUP
Consulting Engineers
10999 IH 10 West • Suite 320
San Antonio, Texas 78230
(210) 858-0610

BEXAR COUNTY
PUBLIC WORKS DIVISION

F.M. 2696 (BLANCO ROAD)

SW3P LAYOUT
PHASE 3 STAGE 1
STA 59+50.00 TO STA 70+50.00

SHEET 2 OF 5

Designed: CA	STATE	BEXAR COUNTY FILE NUMBER	PLAN SET NO.
Checked: SDT	TEXAS		803
Drawn: SS	COUNTY		OF
Checked: SDT	BEXAR		842

P:\2007\27958-1 Blanco Rd South\DESIGN\CSJ\ENVIRONMENTAL\Phase III\6102TSSW3P_P3_S1-02.dgn
12/9/2007 11:55:25 AM

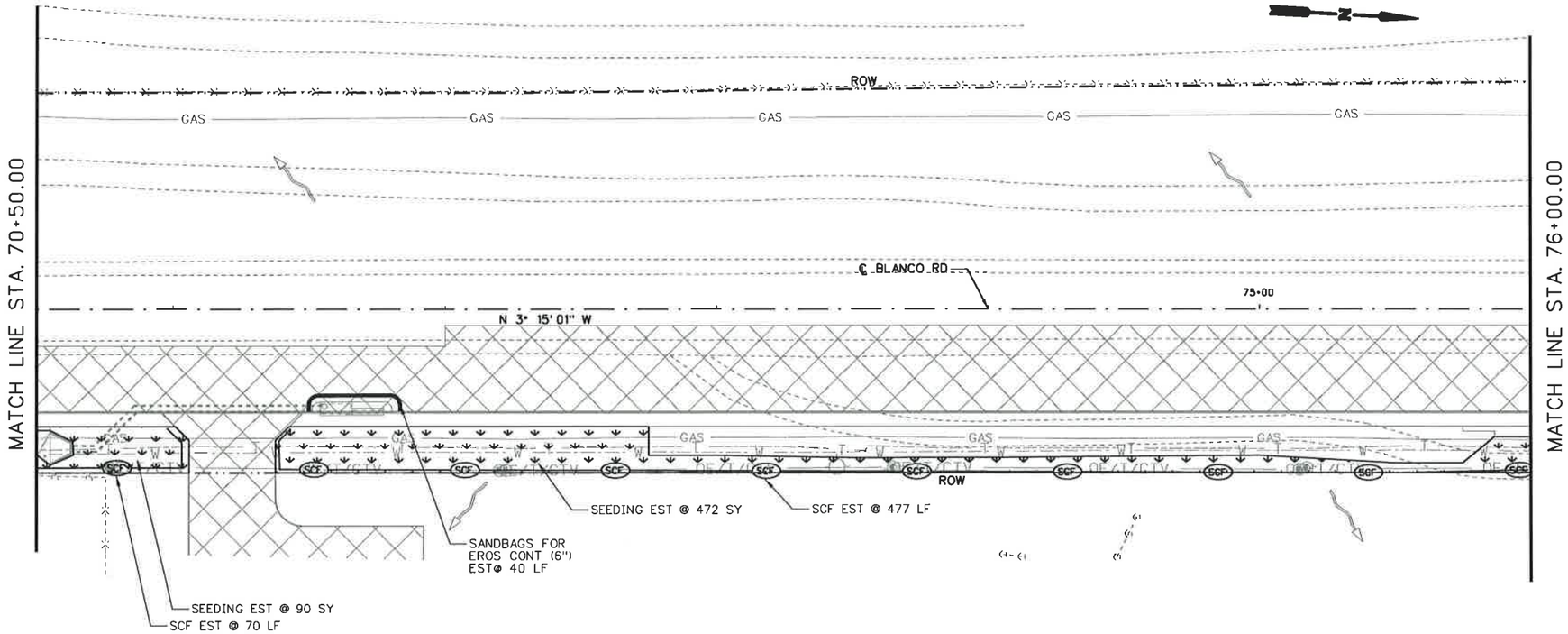

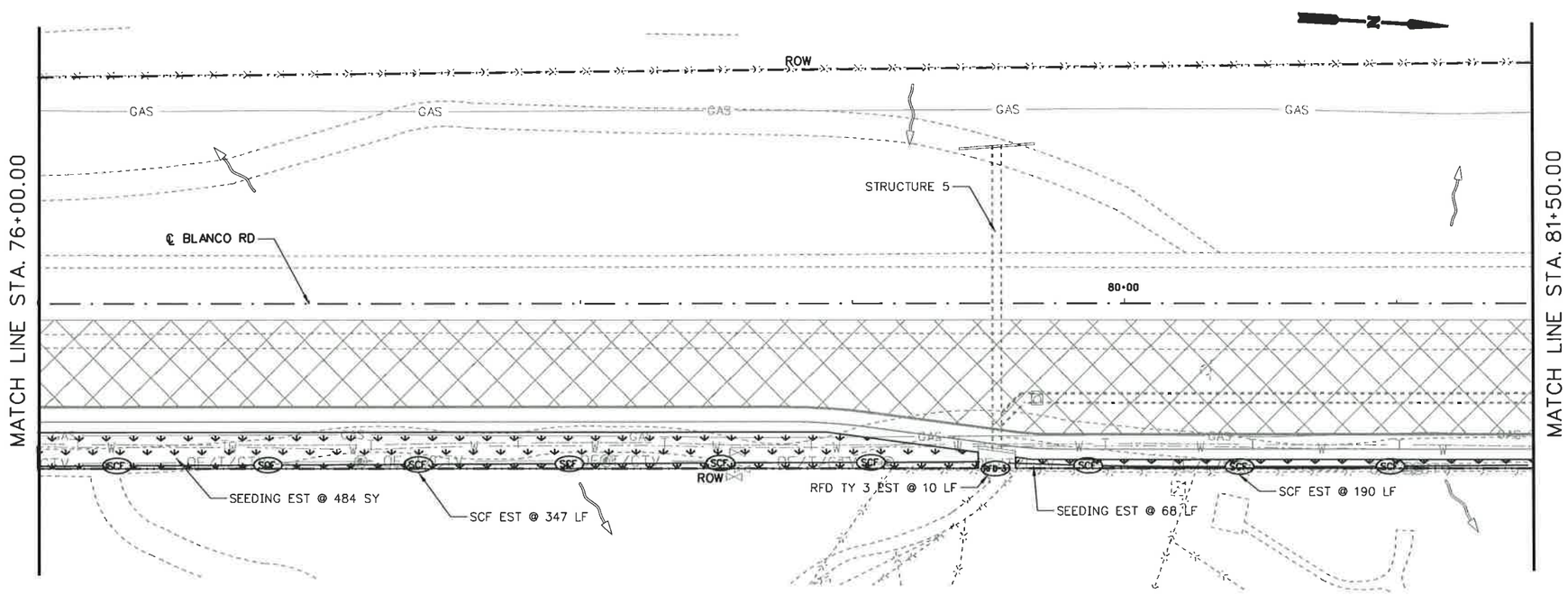

25 12.5 0 25 50
HORIZ. SCALE FEET

LEGEND

- WORKZONE
- TEMP DETOUR
- ROCK FILTER DAM (RFD)
- SEDIMENT CONTROL FENCE (SCF)
- DITCH FLOW LINE
- OVERALL DRAINAGE FLOW
- SEEDING
- SOIL RETENTION BLANKET (SRB)
- SANDBAGS FOR EROSION CONTROL

NOTES:
1. CONSTRUCTION EXITS (TY1) TO BE LOCATED IN THE FIELD AND APPROVED BY THE ENGINEER. THE SIZE OF THE CONSTRUCTION EXITS WILL BE 78 SY EACH (50' X 14'). REFER TO STATE STANDARD "EC(3)-93" FOR DETAILS.

STATE OF TEXAS
STEVEN D. TEMPLER
88656
LICENSED
PROFESSIONAL ENGINEER

STEVEN D. TEMPLER P.E. 12-09-2007
DATE

NO.	REVISION	BY	DATE

CP&Y Chiang, Patel & Yerby, Inc.

TEDSI INFRASTRUCTURE GROUP
Consulting Engineers
10999 IH 10 West • Suite 320
San Antonio, Texas 78230
(210) 858-8610

BEXAR COUNTY
PUBLIC WORKS DIVISION

F.M. 2696 (BLANCO ROAD)

SW3P LAYOUT
PHASE 3 STAGE 1
STA 70+50.00 TO STA 81+50.00

SHEET 3 OF 5

Designed: CA	STATE	BEXAR COUNTY FILE NUMBER	PLAN SET NO. 804
Checked: SDT	TEXAS		OF
Drawn: SS	COUNTY		842
Checked: SDT	BEXAR		

p:\2007\27958-1 blanco rd south\design\cs\ENVIRONMENTAL\Phase III\61027SSW3P_P3_S1+03.050
12/9/2007 11:29:11 AM

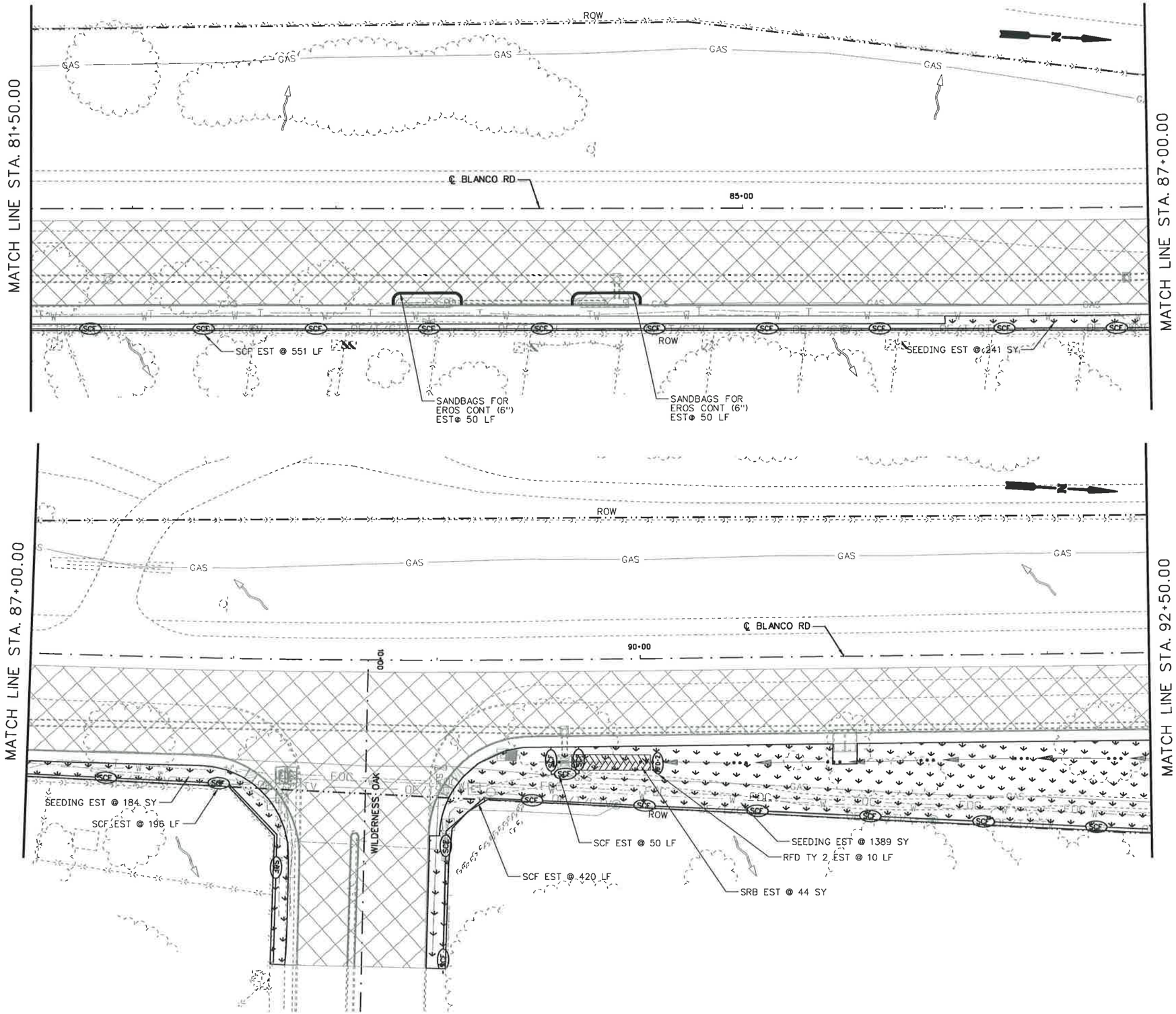

25 12.5 0 25 50
HORIZ. SCALE FEET

LEGEND

- WORKZONE
- TEMP DETOUR
- ROCK FILTER DAM (RFD)
- SEDIMENT CONTROL FENCE (SCF)
- DITCH FLOW LINE
- OVERALL DRAINAGE FLOW
- SEEDING
- SOIL RETENTION BLANKET (SRB)
- SANDBAGS FOR EROSION CONTROL

NOTES:
1. CONSTRUCTION EXITS (TY1) TO BE LOCATED IN THE FIELD AND APPROVED BY THE ENGINEER. THE SIZE OF THE CONSTRUCTION EXITS WILL BE 78 SY EACH (50' X 14'). REFER TO STATE STANDARD "EC(3)-93" FOR DETAILS.

STATE OF TEXAS
STEVEN D. TEMPLER
88656
LICENSED
PROFESSIONAL ENGINEER

STEVEN D. TEMPLER P.E. 12-04-2007
DATE

NO.	REVISION	BY	DATE

CP&Y Chiang, Patel & Yerby, Inc.

TEDSI INFRASTRUCTURE GROUP
Consulting Engineers
10999 IH 10 West • Suite 320
San Antonio, Texas 78230
(210) 858-0610

BEXAR COUNTY
PUBLIC WORKS DIVISION

F.M. 2696 (BLANCO ROAD)

SW3P LAYOUT
PHASE 3 STAGE 1
STA 81+50.00 TO STA 92+50.00

SHEET 4 OF 5

Designed: CA	STATE	BEXAR COUNTY FILE NUMBER	PLAN SET NO.
Checked: SDT	TEXAS		808
Drawn: SS	COUNTY		OF
Checked: SDT	BEXAR		842

p:\2007\27958-1 blanco rd south\design\cs\ENVIRONMENTAL\Phase III\61027SSW3P_P3_S1-04.050
12/9/2007 11:29:13 AM

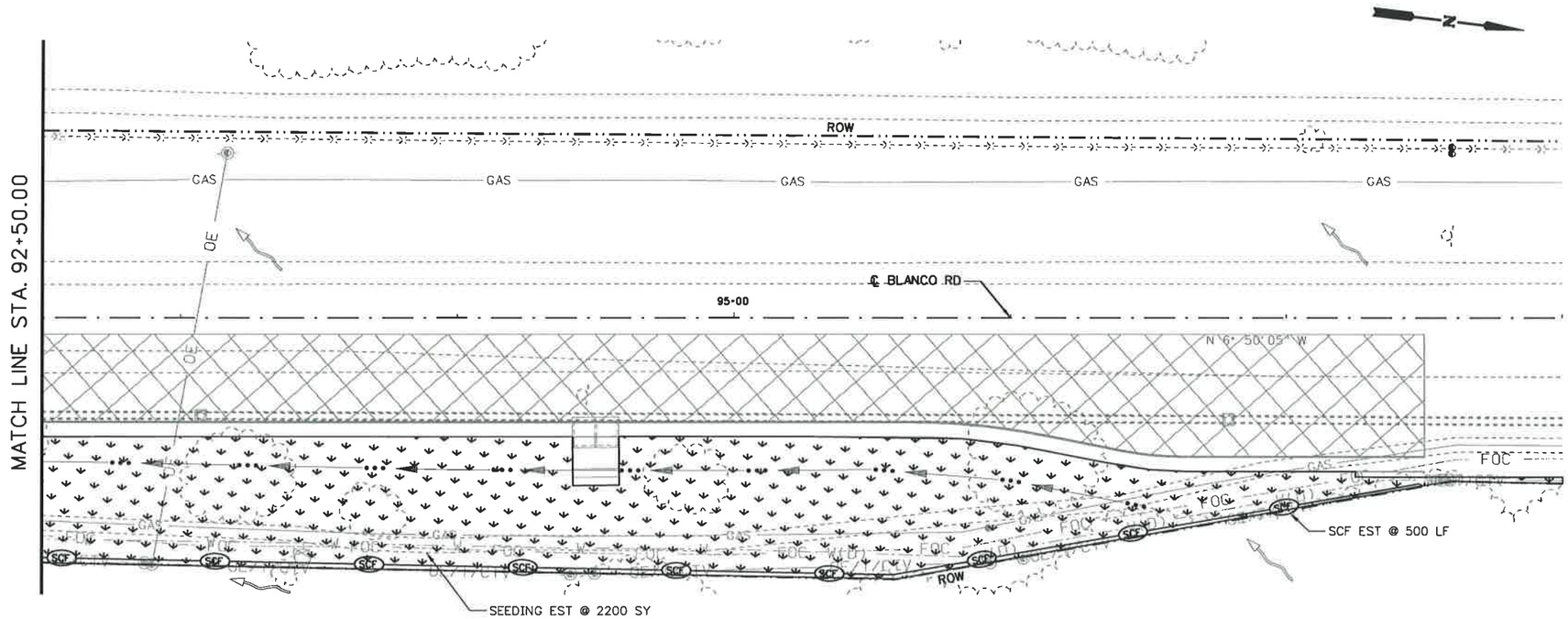

25 12.5 0 25 50
HORIZ. SCALE FEET

LEGEND

- WORKZONE
- TEMP DETOUR
- ROCK FILTER DAM (RFD)
- SEDIMENT CONTROL FENCE (SCF)
- DITCH FLOW LINE
- OVERALL DRAINAGE FLOW
- SEEDING
- SOIL RETENTION BLANKET (SRB)
- SANDBAGS FOR EROSION CONTROL

NOTES:
1. CONSTRUCTION EXITS (TY1) TO BE LOCATED IN THE FIELD AND APPROVED BY THE ENGINEER. THE SIZE OF THE CONSTRUCTION EXITS WILL BE 78 SY EACH (50' X 14'). REFER TO STATE STANDARD "EC(3)-93" FOR DETAILS.

STATE OF TEXAS
STEVEN D. TEMPLER
88656
LICENSED
PROFESSIONAL ENGINEER

STEVEN D. TEMPLER — P.E. — 12-9-2007 DATE

NO.	REVISION	BY	DATE

CP&Y Chiang, Patel & Yerby, Inc.

TEDSI INFRASTRUCTURE GROUP
Consulting Engineers
10999 IH 10 West • Suite 350
San Antonio, Texas 78230
(210) 858-0610

BEXAR COUNTY
PUBLIC WORKS DIVISION

F.M. 2696 (BLANCO ROAD)

SW3P LAYOUT
PHASE 3 STAGE 1
STA 92+50.00 TO STA 103+50.00

SHEET 5 OF 5

Designed: CA	STATE	BEXAR COUNTY FILE NUMBER	PLAN SET NO.
Checked: SDT	TEXAS		80
Drawn: SS	COUNTY		OF
Checked: SDT	BEXAR		842

p:\2007\27958-1 blanco rd south\design\cs\ENVIRONMENTAL\Phase III\6602TSSW3P_P3_S1-05.dgn
12/9/2007 11:29:15 AM

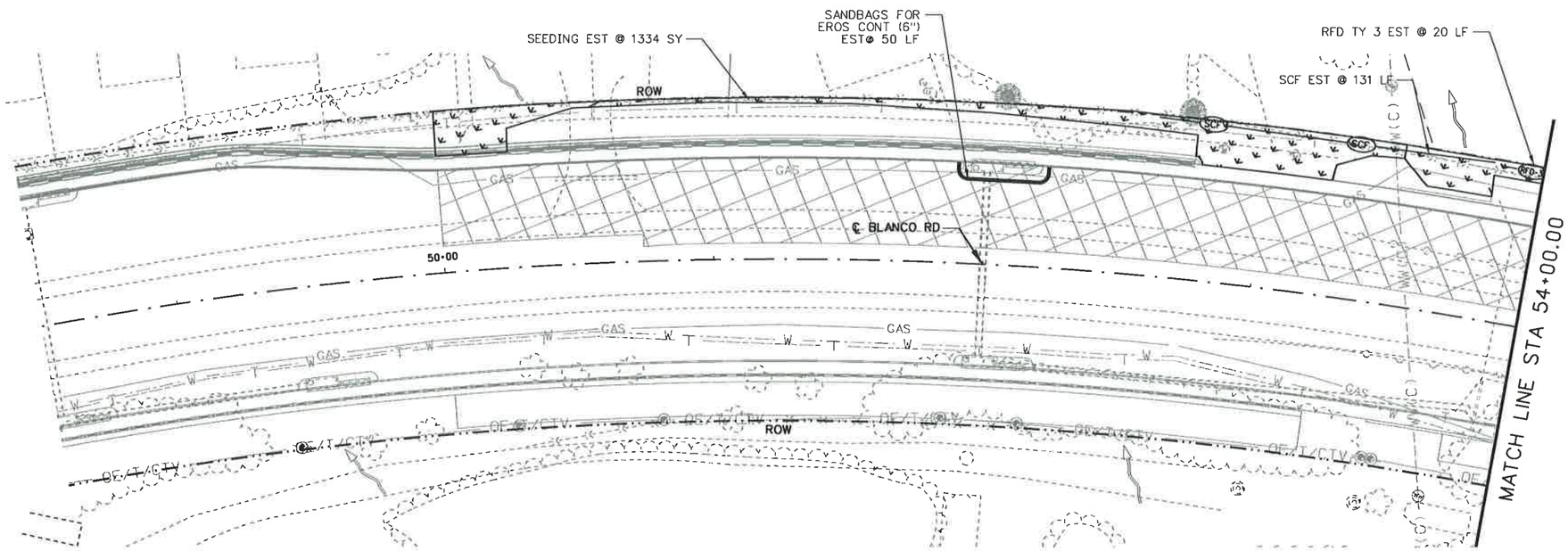

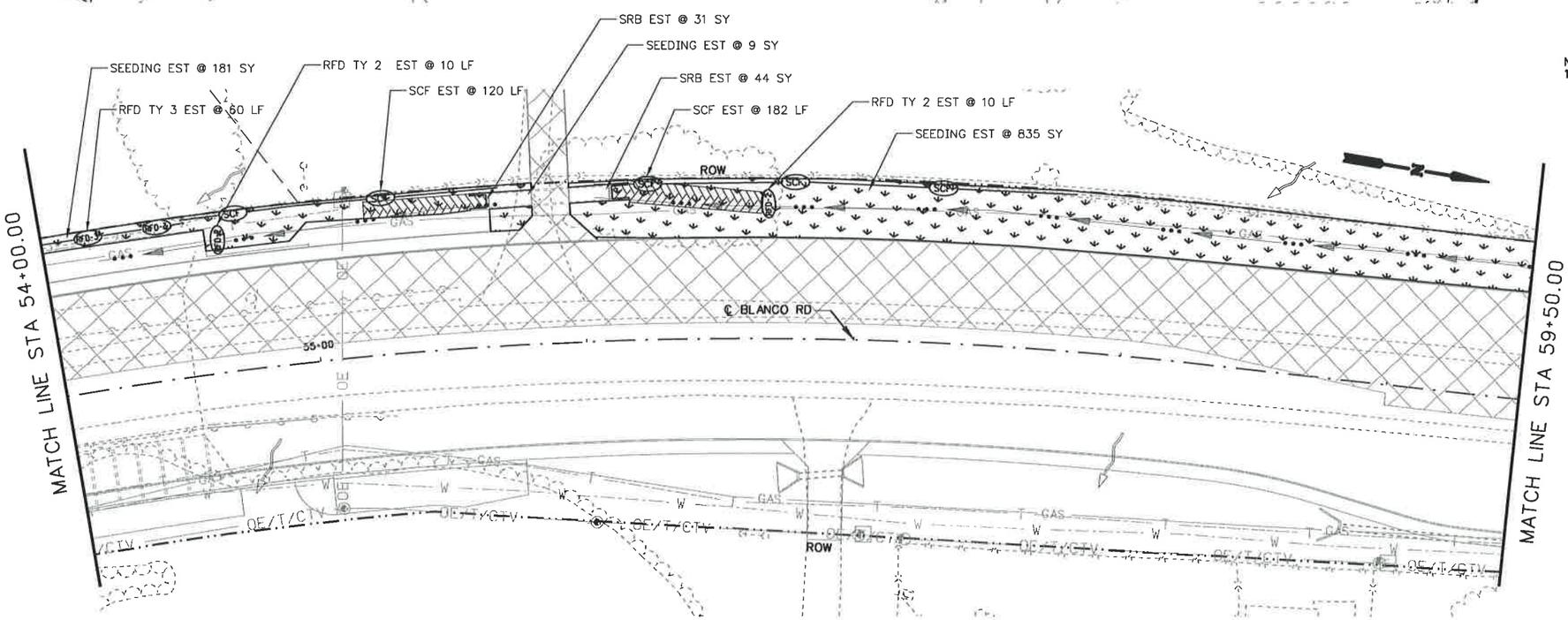

25 12.5 0 25 50
HORIZ. SCALE FEET

LEGEND

- WORKZONE
- TEMP DETOUR
- ROCK FILTER DAM (RFD)
- SEDIMENT CONTROL FENCE (SCF)
- DITCH FLOW LINE
- OVERALL DRAINAGE FLOW
- SEEDING
- SOIL RETENTION BLANKET (SRB)
- SANDBAGS FOR EROSION CONTROL

NOTES:
1. CONSTRUCTION EXITS (TY1) TO BE LOCATED IN THE FIELD AND APPROVED BY THE ENGINEER. THE SIZE OF THE CONSTRUCTION EXITS WILL BE 78 SY EACH (50' X 14'). REFER TO STATE STANDARD "EC(3)-93" FOR DETAILS.

STATE OF TEXAS
STEVEN D. TEMPLER
88656
LICENSED
PROFESSIONAL ENGINEER

STEVEN D. TEMPLER P.E. 12-09-2007
DATE

NO.	REVISION	BY	DATE

CP&Y Chiang, Patel & Yerby, Inc.

TEDSI INFRASTRUCTURE GROUP
Consulting Engineers
10999 IH 10 West • Suite 320
San Antonio, Texas 78230
(210) 858-6610

BEXAR COUNTY
PUBLIC WORKS DIVISION

F.M. 2696 (BLANCO ROAD)

SW3P LAYOUT
PHASE 3 STAGE 2
STA 48+50.00 TO STA 59+50.00

SHEET 1 OF 5

Designed: CA	STATE	BEXAR COUNTY FILE NUMBER	PLAN SET NO 807
Checked: SDT	TEXAS		OF
Drawn: SS	COUNTY		842
Checked: SDT	BEXAR		

p:\2007\27958-1 blanco rd south\design\cad\ENVIRONMENTAL\Phase III\61027SSW3P_P3_S2-01.DGN
12/9/2007 11:29:16 AM

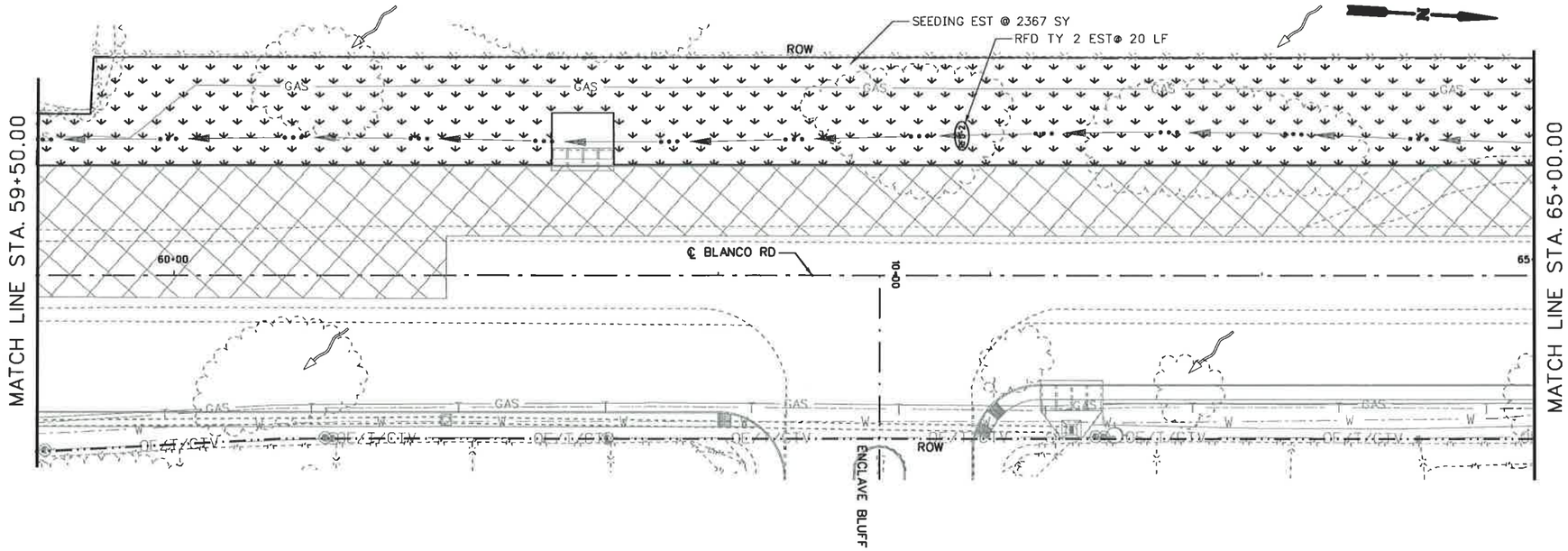

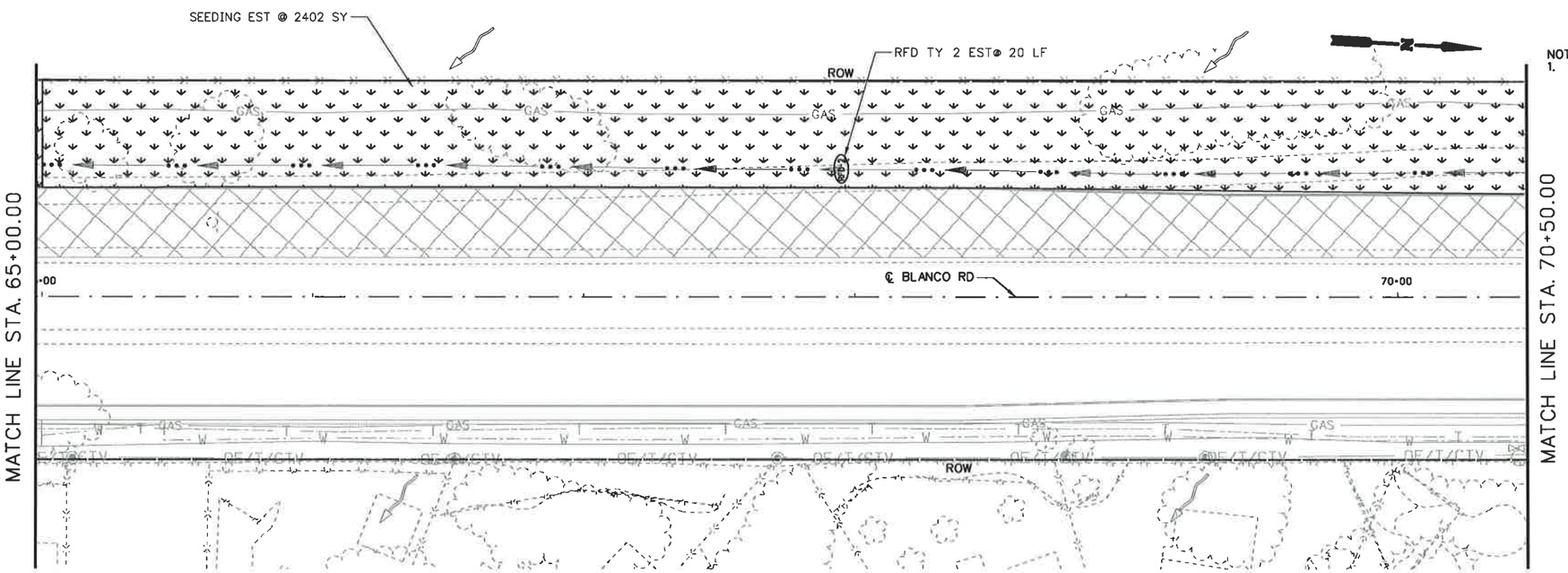

25 12.5 0 25 50
HORIZ. SCALE FEET

LEGEND

- WORKZONE
- TEMP DETOUR
- ROCK FILTER DAM (RFD)
- SEDIMENT CONTROL FENCE (SCF)
- DITCH FLOW LINE
- OVERALL DRAINAGE FLOW
- SEEDING
- SOIL RETENTION BLANKET (SRB)
- SANDBAGS FOR EROSION CONTROL

NOTES:
1. CONSTRUCTION EXITS (TY1) TO BE LOCATED IN THE FIELD AND APPROVED BY THE ENGINEER. THE SIZE OF THE CONSTRUCTION EXITS WILL BE 78 SY EACH (50' X 14'). REFER TO STATE STANDARD "EC(3)-93" FOR DETAILS.

STATE OF TEXAS
STEVEN D. TEMPLER
88656
LICENSED
PROFESSIONAL ENGINEER

STEVEN D. TEMPLER P.E 12-09-2007
DATE

NO.	REVISION	BY	DATE

CP&Y Chiang, Patel & Yerby, Inc.

TEDSI INFRASTRUCTURE GROUP
Consulting Engineers
10999 IH 10 West • Suite 320
San Antonio, Texas 78230
(210) 858-0610

BEXAR COUNTY
PUBLIC WORKS DIVISION

F.M. 2696 (BLANCO ROAD)

SW3P LAYOUT
PHASE 3 STAGE 2
STA 59+50.00 TO STA 70+50.00

SHEET 2 OF 5

Designed: CA	STATE	BEXAR COUNTY FILE NUMBER	PLAN SET NO.
Checked: SDT	TEXAS		8098
Drawn: SS	COUNTY		OF
Checked: SDT	BEXAR		842

p:\2007\27958-1 blanco rd south\design\cs\ENVIRONMENTAL\Phase II\61027SSW3P_P3_S2-02.050
12/9/2007 11:29:18 AM

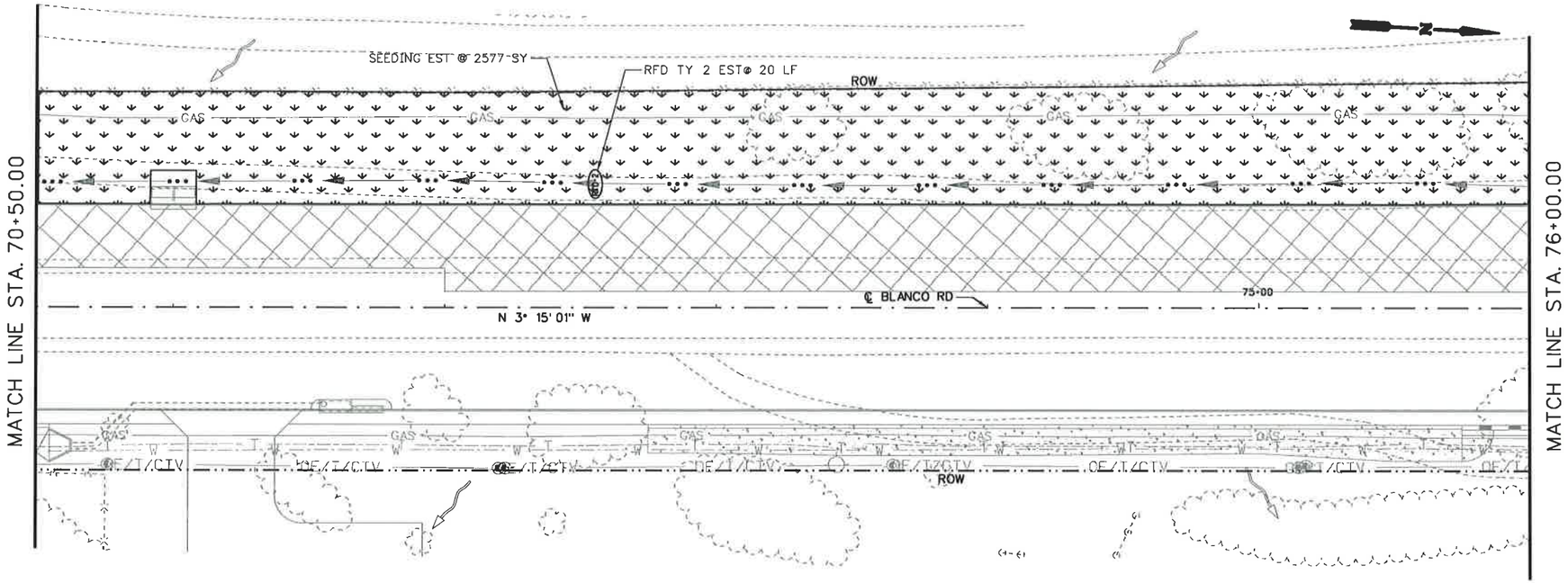

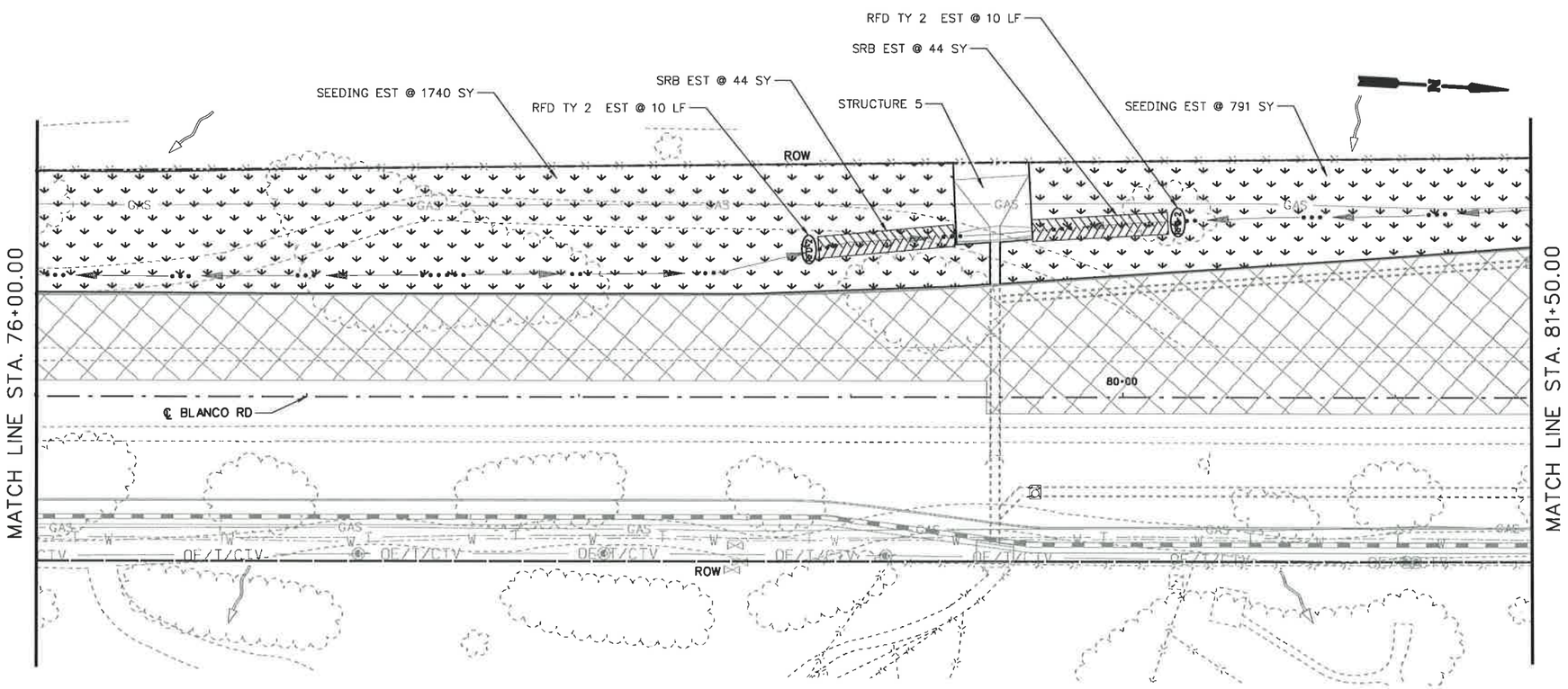

25 12.5 0 25 50
HORIZ. SCALE FEET

LEGEND

- WORKZONE
- TEMP DETOUR
- ROCK FILTER DAM (RFD)
- SEDIMENT CONTROL FENCE (SCF)
- DITCH FLOW LINE
- OVERALL DRAINAGE FLOW
- SEEDING
- SOIL RETENTION BLANKET (SRB)
- SANDBAGS FOR EROSION CONTROL

NOTES:
1. CONSTRUCTION EXITS (TY1) TO BE LOCATED IN THE FIELD AND APPROVED BY THE ENGINEER. THE SIZE OF THE CONSTRUCTION EXITS WILL BE 78 SY EACH (50' X 14'). REFER TO STATE STANDARD "EC(3)-93" FOR DETAILS.

STATE OF TEXAS
STEVEN D. TEMPLER
88656
LICENSED
PROFESSIONAL ENGINEER

STEVEN D. TEMPLER P.E. 12-09-2007
DATE

NO.	REVISION	BY	DATE

CP&Y Chiang, Patel & Yerby, Inc.

TEDSI INFRASTRUCTURE GROUP
Consulting Engineers
10999 IH 10 West • Suite 320
San Antonio, Texas 78230
(210) 858-0610

BEXAR COUNTY
PUBLIC WORKS DIVISION

F.M. 2696 (BLANCO ROAD)

SW3P LAYOUT
PHASE 3 STAGE 2
STA 70+50.00 TO STA 81+50.00

SHEET 3 OF 5

Designed: CA	STATE	BEXAR COUNTY FILE NUMBER	PLAN SET NO.
Checked: SDT	TEXAS		809
Drawn: SS	COUNTY		OF
Checked: SDT	BEXAR		842

p:\2007\27958-1 blanco rd south\design\cs\ENVIRONMENTAL\Phase III\61027SSW3P_P3_S2-03.dgn
12/9/2007 11:29:20 AM

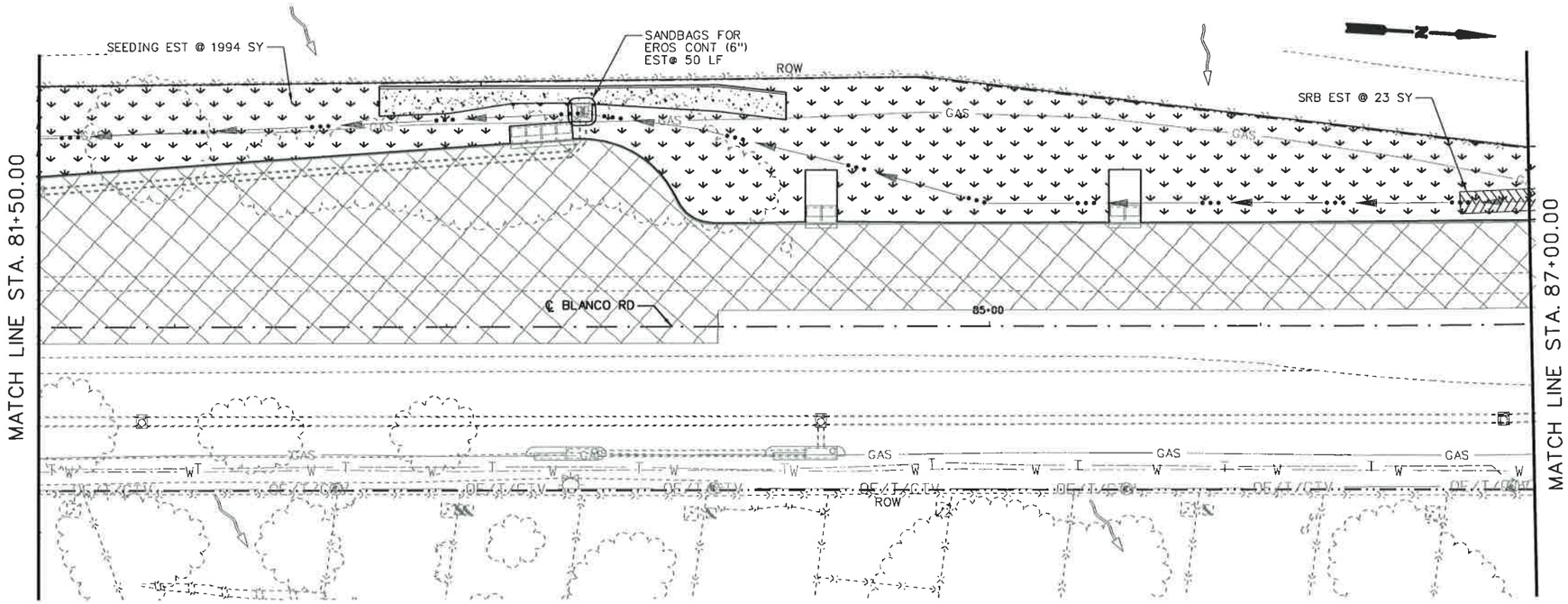

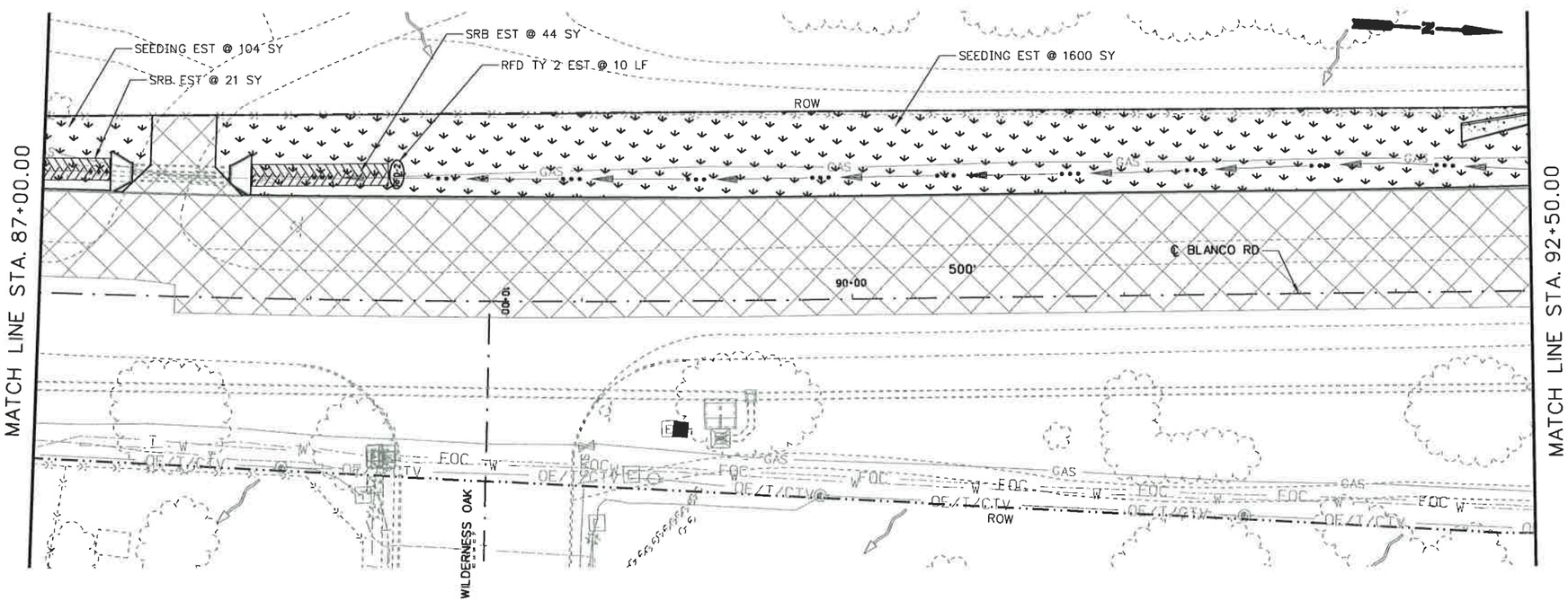

25 12.5 0 25 50
HORIZ. SCALE FEET

LEGEND

- WORKZONE
- TEMP DETOUR
- (RFD) ROCK FILTER DAM (RFD)
- (SCF) SEDIMENT CONTROL FENCE (SCF)
- DITCH FLOW LINE
- OVERALL DRAINAGE FLOW
- SEEDING
- SOIL RETENTION BLANKET (SRB)
- SANDBAGS FOR EROSION CONTROL

NOTES:
1. CONSTRUCTION EXITS (TY1) TO BE LOCATED IN THE FIELD AND APPROVED BY THE ENGINEER. THE SIZE OF THE CONSTRUCTION EXITS WILL BE 78 SY EACH (50' X 14'). REFER TO STATE STANDARD "EC(3)-93" FOR DETAILS.

STATE OF TEXAS
STEVEN D. TEMPLER
88656
LICENSED
PROFESSIONAL ENGINEER

STEVEN D. TEMPLER — P.E. — DATE 12.09.2007

NO.	REVISION	BY	DATE

CP&Y Chiang, Patel & Yerby, Inc.

TEDSI INFRASTRUCTURE GROUP
Consulting Engineers
10999 IH 10 West • Suite 320
San Antonio, Texas 78230
(210) 858-0610

BEXAR COUNTY
PUBLIC WORKS DIVISION

F.M. 2696 (BLANCO ROAD)

SW3P LAYOUT

PHASE 3 STAGE 2
STA 81+50.00 TO STA 92+50.00

SHEET 4 OF 5

Designed: CA	STATE	BEXAR COUNTY FILE NUMBER	PLAN SET NO.
Checked: SDT	TEXAS		8101
Drawn: SS	COUNTY		OF
Checked: SDT	BEXAR		8+2

P:\2007\27958-1 Blanco Rd South\DESIGN\CSJ\ENVIRONMENTAL\Phase III\6102TSSW3P_P3_S2-04.dgn
12/9/2007 11:53:37 AM

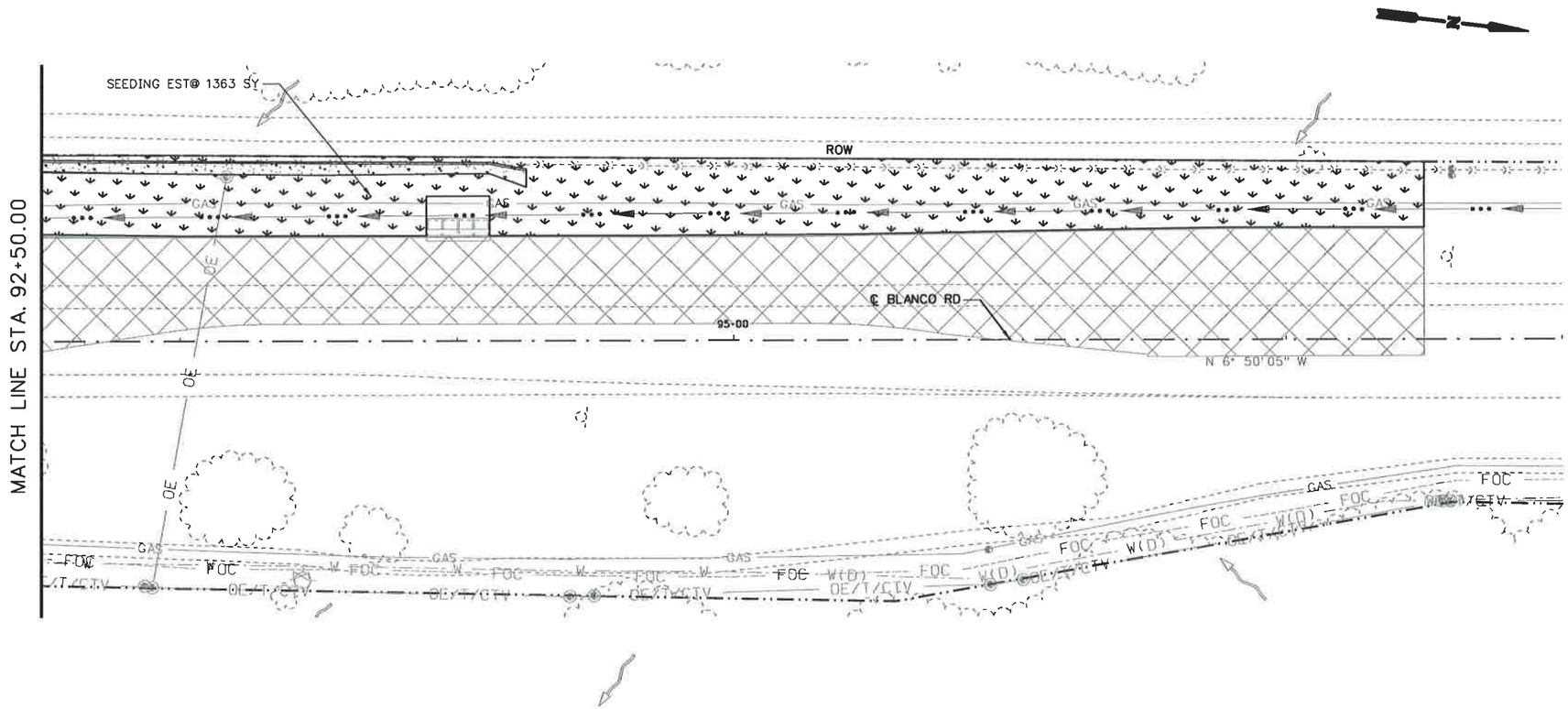

25 12.5 0 25 50
HORIZ. SCALE FEET

LEGEND

- WORKZONE
- TEMP DETOUR
- ROCK FILTER DAM (RFD)
- SEDIMENT CONTROL FENCE (SCF)
- DITCH FLOW LINE
- OVERALL DRAINAGE FLOW
- SEEDING
- SOIL RETENTION BLANKET (SRB)
- SANDBAGS FOR EROSION CONTROL

NOTES:
1. CONSTRUCTION EXITS (TY1) TO BE LOCATED IN THE FIELD AND APPROVED BY THE ENGINEER. THE SIZE OF THE CONSTRUCTION EXITS WILL BE 78 SY EACH (50' X 14'). REFER TO STATE STANDARD "EC(3)-93" FOR DETAILS.

STATE OF TEXAS
STEVEN D. TEMPLER
88656
LICENSED
PROFESSIONAL ENGINEER

SDT P.E. 12-09-2007
STEVEN D. TEMPLER DATE

NO.	REVISION	BY	DATE

CP&Y Chiang, Patel & Yerby, Inc.

TEDSI INFRASTRUCTURE GROUP
Consulting Engineers
10999 IH 10 West • Suite 320
San Antonio, Texas 78230
(210) 858-0610

BEXAR COUNTY
PUBLIC WORKS DIVISION

F.M. 2696 (BLANCO ROAD)

SW3P LAYOUT
PHASE 3 STAGE 2
STA 92+50.00 TO STA 99+00.00

SHEET 5 OF 5

Designed: CA	STATE	BEXAR COUNTY FILE NUMBER	PLAN SET NO.
Checked: SDT	TEXAS		811
Drawn: SS	COUNTY		OF
Checked: SDT	BEXAR		842

P:\2007\27956-1 Blanco Rd South\DESIGN\CS\ENVIRONMENTAL\Phase III\6102TSSW3P_P3_S2-05.050
12/9/2007 12:01:00 PM

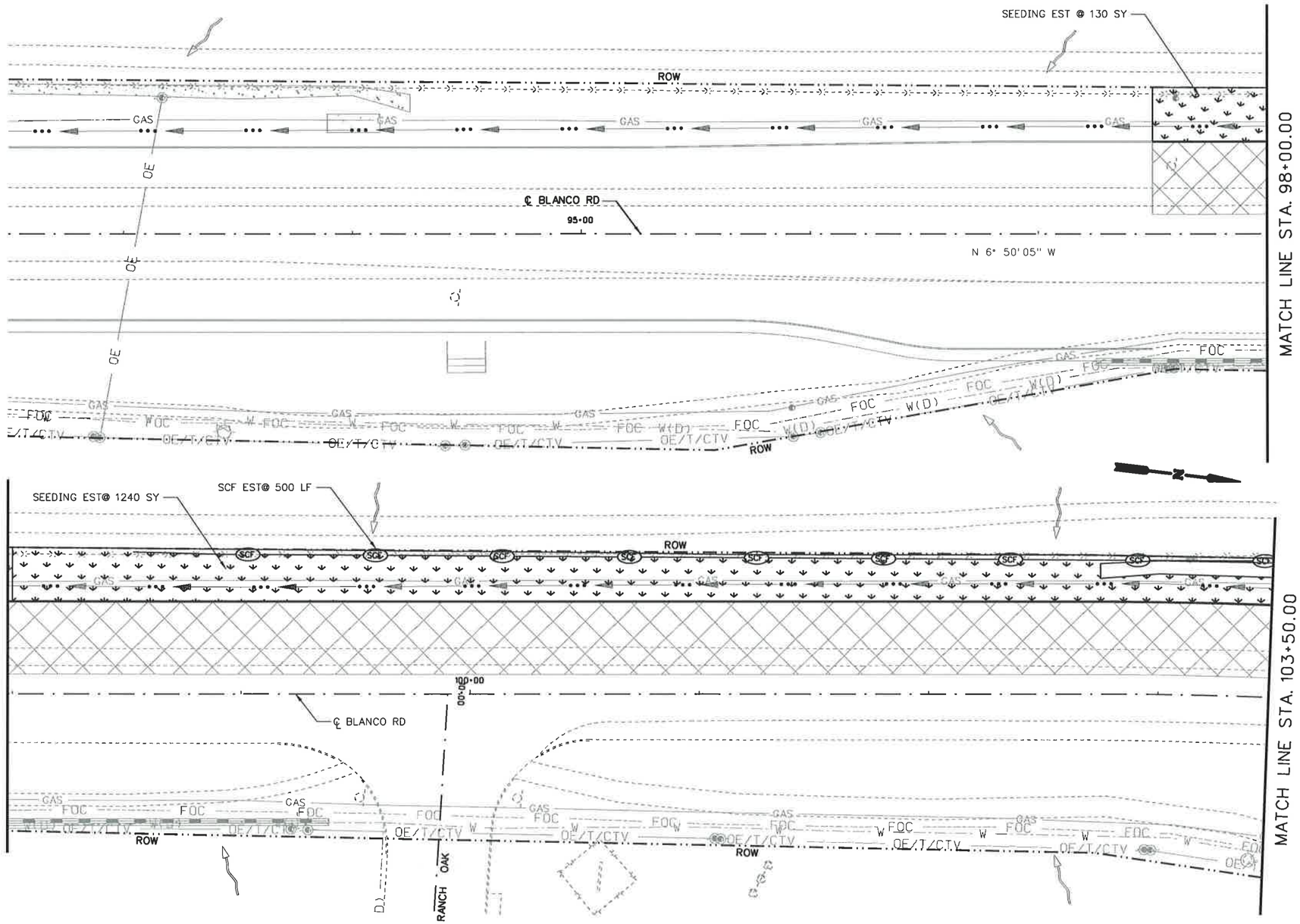

25 12.5 0 25 50
HORIZ. SCALE FEET

LEGEND

- WORKZONE
- TEMP DETOUR
- ROCK FILTER DAM (RFD)
- SEDIMENT CONTROL FENCE (SCF)
- DITCH FLOW LINE
- OVERALL DRAINAGE FLOW
- SEEDING
- SOIL RETENTION BLANKET (SRB)
- SANDBAGS FOR EROSION CONTROL

NOTES:
1. CONSTRUCTION EXITS (TY1) TO BE LOCATED IN THE FIELD AND APPROVED BY THE ENGINEER. THE SIZE OF THE CONSTRUCTION EXITS WILL BE 78 SY EACH (50' X 14'). REFER TO STATE STANDARD "EC(3)-93" FOR DETAILS.

STATE OF TEXAS
STEVEN D. TEMPLER
88656
LICENSED
PROFESSIONAL ENGINEER

STEVEN D. TEMPLER P.E. 12.04.2007
DATE

NO.	REVISION	BY	DATE

CP&Y Chiang, Patel & Yerby, Inc.

TEDSI INFRASTRUCTURE GROUP
Consulting Engineers
10999 IH 10 West • Suite 320
San Antonio, Texas 78230
(210) 858-0610

BEXAR COUNTY
PUBLIC WORKS DIVISION

F.M. 2696 (BLANCO ROAD)

SW3P LAYOUT

PHASE 4 STAGE 1
STA 99+00.00 TO STA 103+50.00

SHEET 1 OF 4

Designed: CA	STATE	BEXAR COUNTY FILE NUMBER	PLAN SET NO. 812
Checked: SDT	TEXAS		
Drawn: SS	COUNTY		OF
Checked: SDT	BEXAR		842

p:\2007\27958-1 blanco rd south\design\cs\ENVIRONMENTAL\Phase IV\61027TSSW3P_P4_S1-01.050
12/9/2007 11:30:49 AM

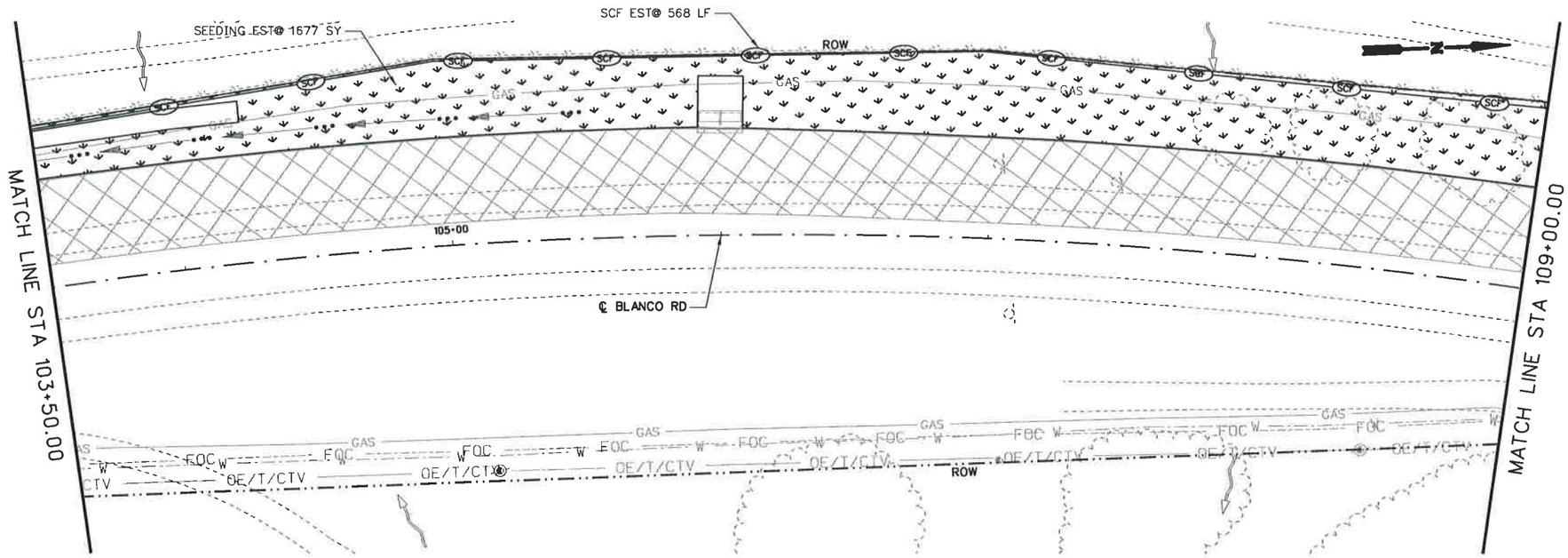

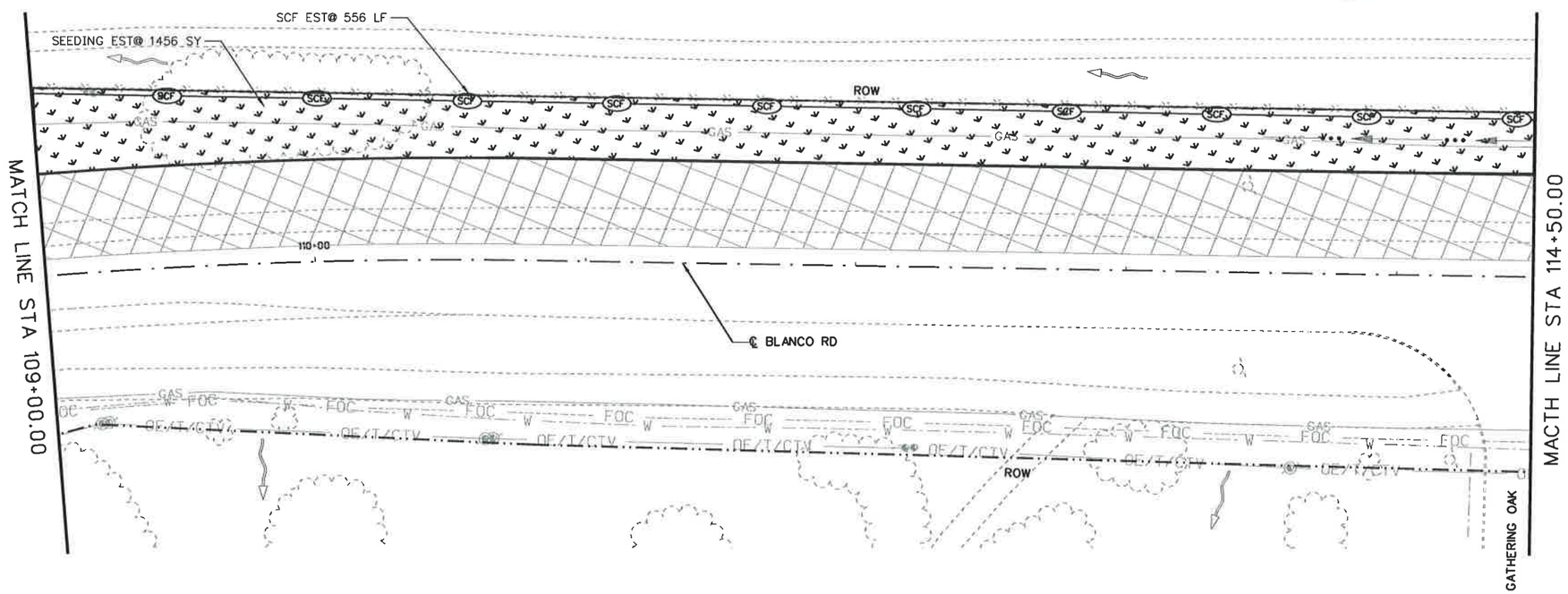

25 12.5 0 25 50
HORIZ. SCALE FEET

LEGEND

- WORKZONE
- TEMP DETOUR
- ROCK FILTER DAM (RFD)
- SEDIMENT CONTROL FENCE (SCF)
- DITCH FLOW LINE
- OVERALL DRAINAGE FLOW
- SEEDING
- SOIL RETENTION BLANKET (SRB)
- SANDBAGS FOR EROSION CONTROL

NOTES:
1. CONSTRUCTION EXITS (TY1) TO BE LOCATED IN THE FIELD AND APPROVED BY THE ENGINEER. THE SIZE OF THE CONSTRUCTION EXITS WILL BE 78 SY EACH (50' X 14'). REFER TO STATE STANDARD "EC(3)-93" FOR DETAILS.

STATE OF TEXAS
STEVEN D. TEMPLER
88656
LICENSED
PROFESSIONAL ENGINEER

STEVEN D. TEMPLER P.E. 12-09-2007
DATE

NO.	REVISION	BY	DATE

CP&Y Chiang, Patel & Yerby, Inc.

TEDSI INFRASTRUCTURE GROUP
Consulting Engineers
10999 IH 10 West • Suite 320
San Antonio, Texas 78230
(210) 858-0610

BEXAR COUNTY
PUBLIC WORKS DIVISION

F.M. 2696 (BLANCO ROAD)

SW3P LAYOUT
PHASE 4 STAGE 1
STA 103+50.00 TO STA 114+50.00

SHEET 2 OF 4

Designed: CA	STATE	BEXAR COUNTY FILE NUMBER	PLAN SET NO. 816
Checked: SDT	TEXAS		
Drawn: SS	COUNTY		OF 842
Checked: SDT	BEXAR		

p:\2007\27958-1 blanco rd south\design\cs\ENVIRONMENTAL\Phase IV\6102TSSW3P_P4_S1-02.dgn
12/9/2007 11:30:51 AM

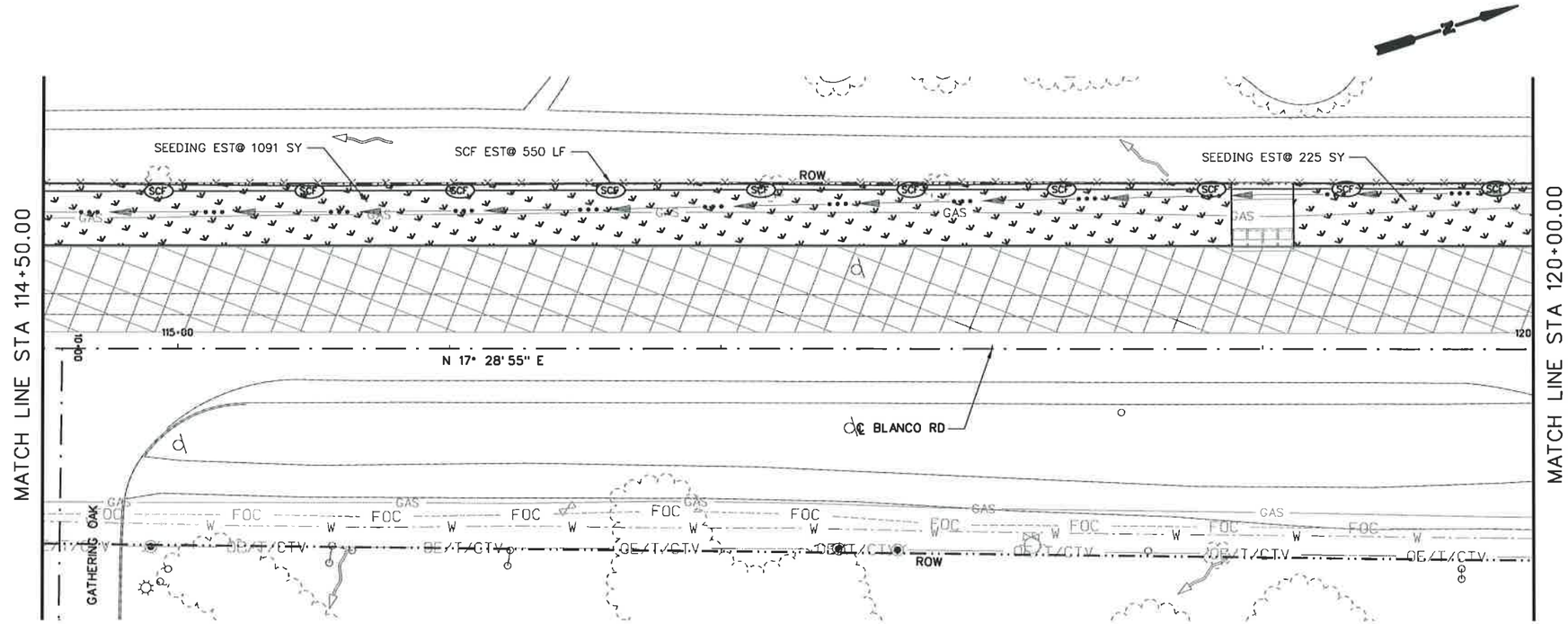

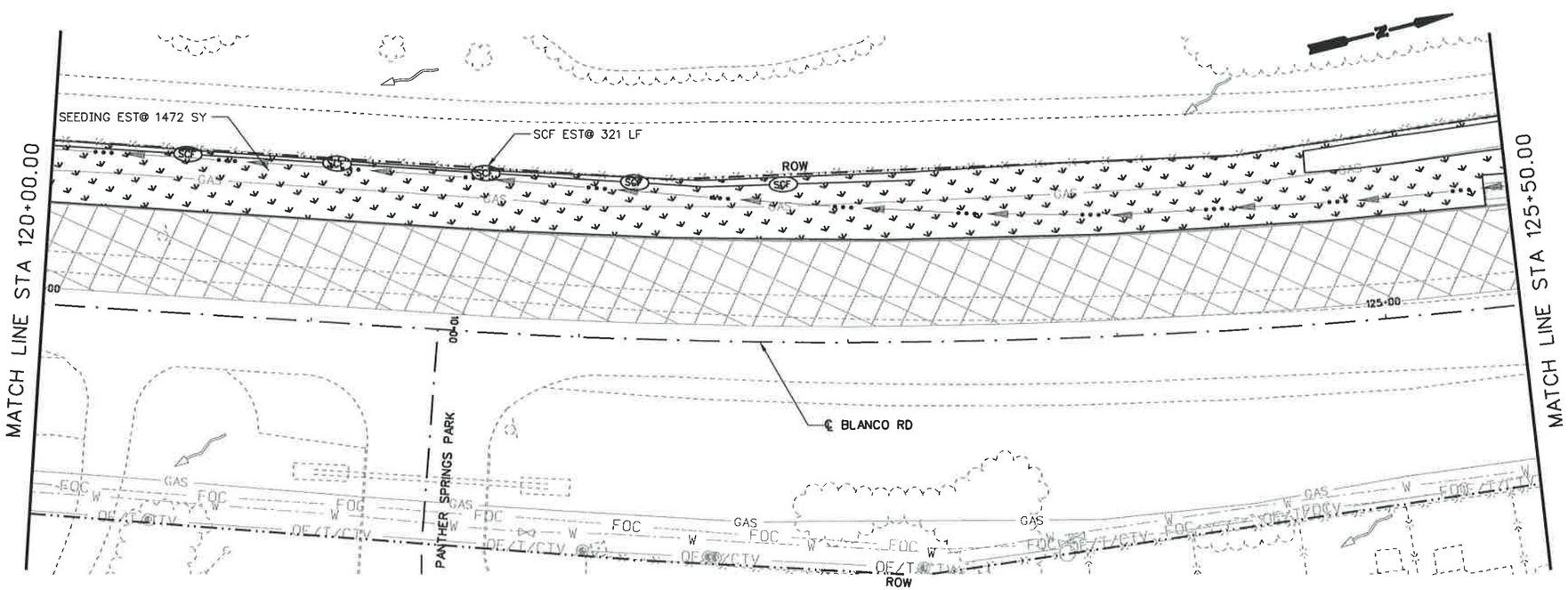

25 12.5 0 25 50
HORIZ. SCALE FEET

LEGEND

- WORKZONE
- TEMP DETOUR
- ROCK FILTER DAM (RFD)
- SEDIMENT CONTROL FENCE (SCF)
- DITCH FLOW LINE
- OVERALL DRAINAGE FLOW
- SEEDING
- SOIL RETENTION BLANKET (SRB)
- SANDBAGS FOR EROSION CONTROL

NOTES:
1. CONSTRUCTION EXITS (TY1) TO BE LOCATED IN THE FIELD AND APPROVED BY THE ENGINEER. THE SIZE OF THE CONSTRUCTION EXITS WILL BE 78 SY EACH (50' X 14'). REFER TO STATE STANDARD "EC(3)-93" FOR DETAILS.

STATE OF TEXAS
STEVEN D. TEMPLER
88656
LICENSED
PROFESSIONAL ENGINEER

STEVEN D. TEMPLER P.E. 12-07-2007
DATE

NO.	REVISION	BY	DATE

CP&Y Chiang, Patel & Yerby, Inc.

TEDSI INFRASTRUCTURE GROUP
Consulting Engineers
10999 IH 10 West • Suite 330
San Antonio, Texas 78230
(210) 858-0610

BEXAR COUNTY
PUBLIC WORKS DIVISION

F.M. 2696 (BLANCO ROAD)

SW3P LAYOUT
PHASE 4 STAGE 1
STA 114+50.00 TO STA 125+50.00

SHEET 3 OF 4

Designed: CA	STATE	BEXAR COUNTY FILE NUMBER	PLAN SET NO. 3
Checked: SDT	TEXAS		OF
Drawn: SS	COUNTY		8
Checked: SDT	BEXAR		

p:\2007\27958-1 blanco rd south\design\csj\ENVIRONMENTAL\Phase IV\6102TSSW3P_P4_S1-03.050
12/9/2007 11:30:53 AM

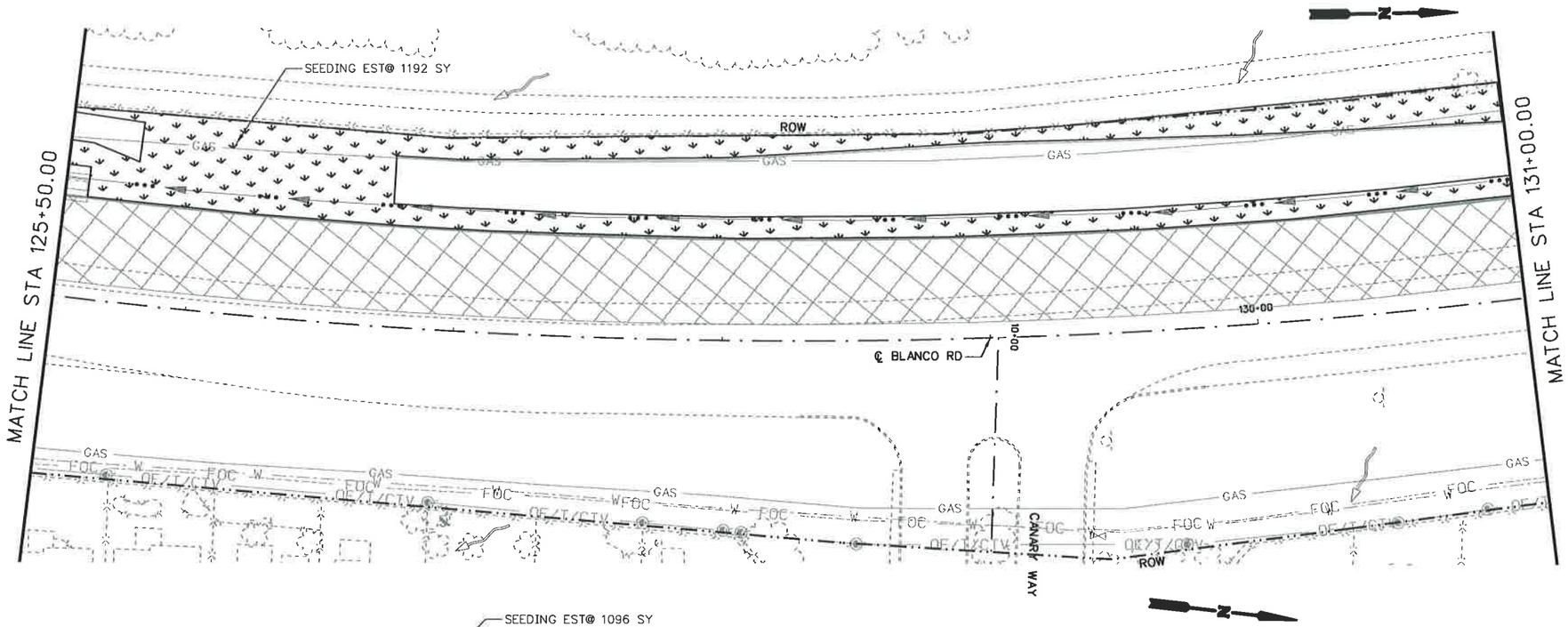

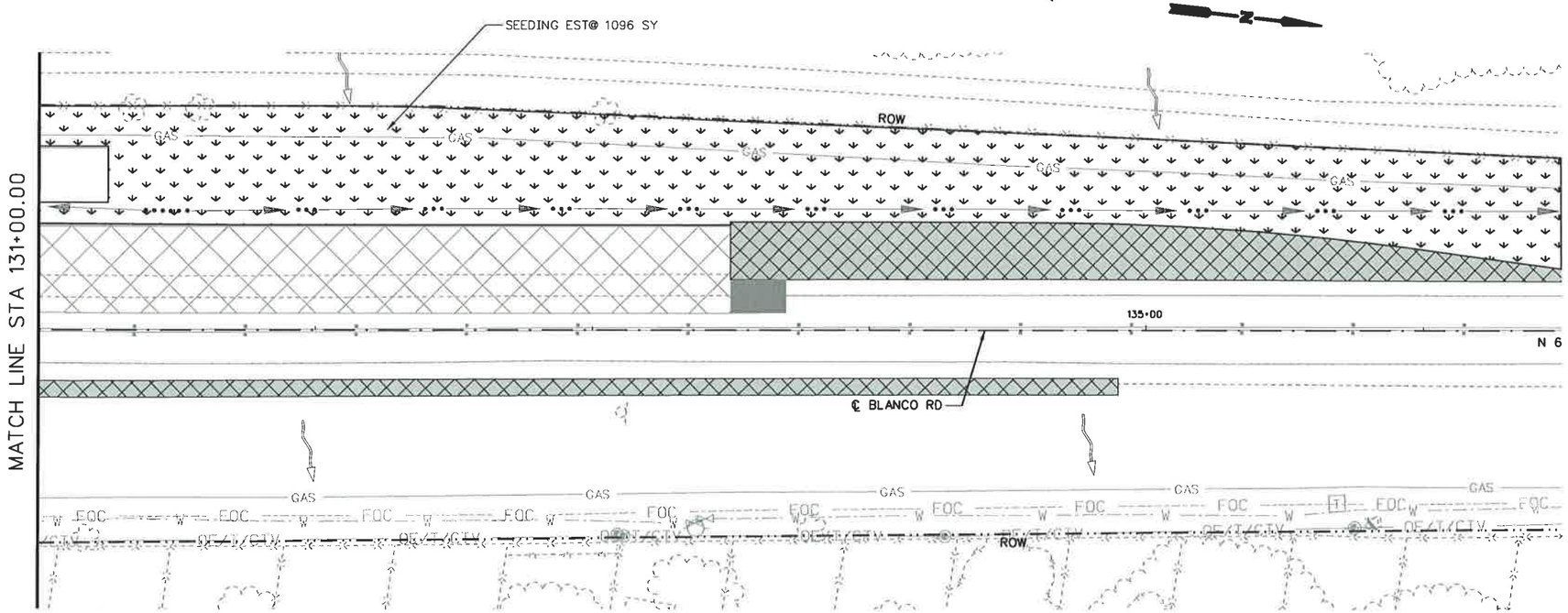

25 12.5 0 25 50
HORIZ. SCALE FEET

LEGEND

- WORKZONE
- TEMP DETOUR
- (RFD) ROCK FILTER DAM (RFD)
- (SCF) SEDIMENT CONTROL FENCE (SCF)
- DITCH FLOW LINE
- OVERALL DRAINAGE FLOW
- SEEDING
- SOIL RETENTION BLANKET (SRB)
- SANDBAGS FOR EROSION CONTROL

NOTES:
1. CONSTRUCTION EXITS (TY1) TO BE LOCATED IN THE FIELD AND APPROVED BY THE ENGINEER. THE SIZE OF THE CONSTRUCTION EXITS WILL BE 78 SY EACH (50' X 14'). REFER TO STATE STANDARD "EC(3)-93" FOR DETAILS.

STATE OF TEXAS
STEVEN D. TEMPLER
88656
LICENSED
PROFESSIONAL ENGINEER

STEVEN D. TEMPLER P.E. 12-09-2007
DATE

NO.	REVISION	BY	DATE

CP&Y Chiang, Patel & Yerby, Inc.

TEDSI INFRASTRUCTURE GROUP
Consulting Engineers
10999 IH 10 West • Suite 320
San Antonio, Texas 78230
(210) 858-0610

BEXAR COUNTY
PUBLIC WORKS DIVISION

F.M. 2696 (BLANCO ROAD)

SW3P LAYOUT

PHASE 4 STAGE 1
STA 125+50.00 TO STA 136+50.00

SHEET 4 OF 4

Designed: CA	STATE	BEXAR COUNTY FILE NUMBER	PLAN SET NO.
Checked: SDT	TEXAS		81.3
Drawn: SS	COUNTY		OF
Checked: SDT	BEXAR		84.2

P:\2007\27958-1 Blanco Rd South\DESIGN\CS\ENVIRONMENTAL\Phase IV\61027SSW3P_P4_S1-04.050
12/9/2007 11:52:10 AM

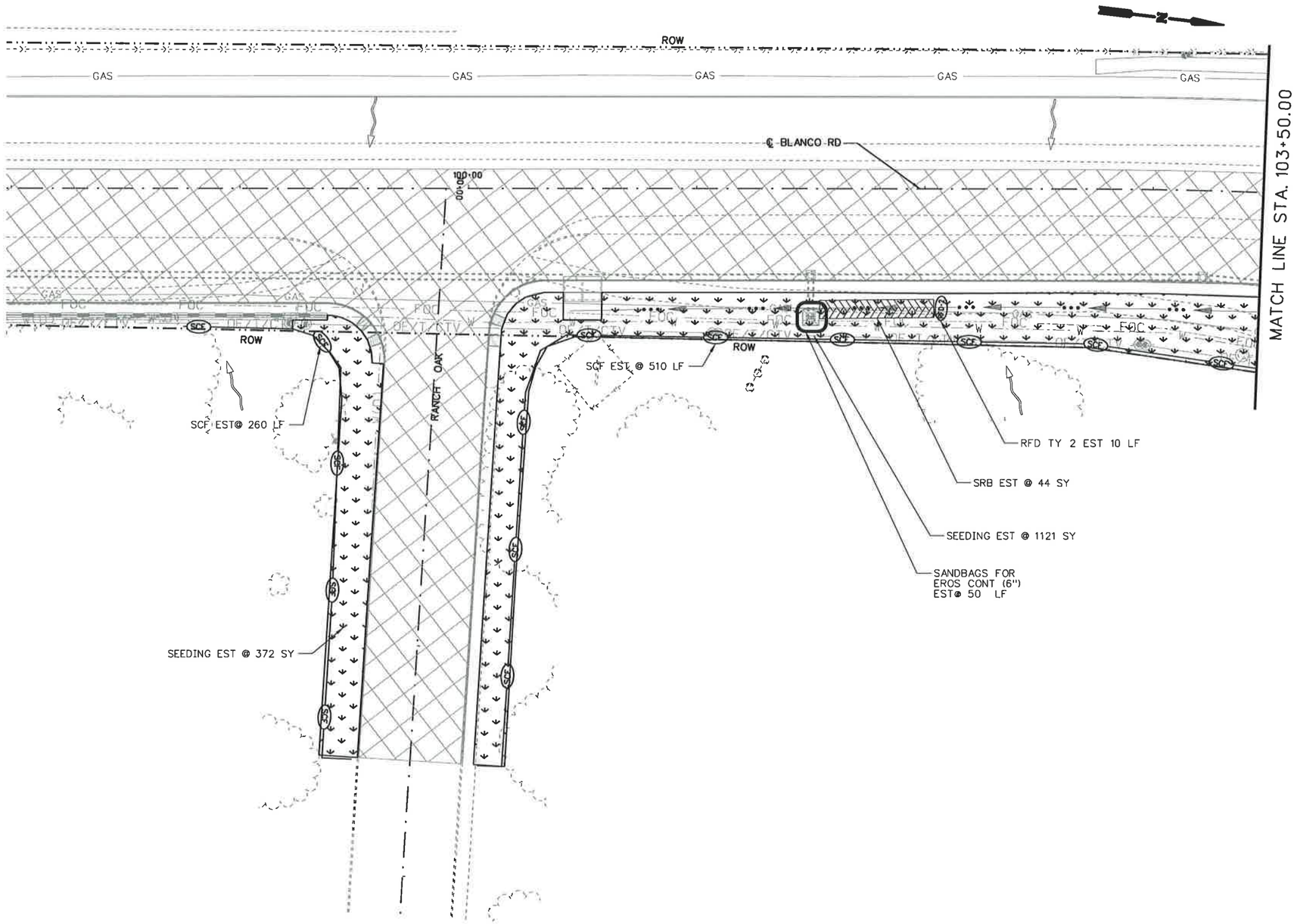

25 12.5 0 25 50
HORIZ. SCALE FEET

LEGEND

- WORKZONE
- TEMP DETOUR
- ROCK FILTER DAM (RFD)
- SEDIMENT CONTROL FENCE (SCF)
- DITCH FLOW LINE
- OVERALL DRAINAGE FLOW
- SEEDING
- SOIL RETENTION BLANKET (SRB)
- SANDBAGS FOR EROSION CONTROL

NOTES:
1. CONSTRUCTION EXITS (TY1) TO BE LOCATED IN THE FIELD AND APPROVED BY THE ENGINEER. THE SIZE OF THE CONSTRUCTION EXITS WILL BE 78 SY EACH (50' X 14'). REFER TO STATE STANDARD "EC(3)-93" FOR DETAILS.

STATE OF TEXAS
STEVEN D. TEMPLER
88656
LICENSED
PROFESSIONAL ENGINEER

STEVEN D. TEMPLER P.E. 12-06-2007
DATE

NO.	REVISION	BY	DATE

CP&Y Chiang, Patel & Yerby, Inc.

TEDSI INFRASTRUCTURE GROUP
Consulting Engineers
10999 IH 10 West • Suite 320
San Antonio, Texas 78230
(210) 858-0610

BEXAR COUNTY
PUBLIC WORKS DIVISION

F.M. 2696 (BLANCO ROAD)

SW3P LAYOUT
PHASE 4 STAGE 2
STA 98+00.00 TO STA 103+50.00

SHEET 1 OF 4

Designed: CA	STATE	BEXAR COUNTY FILE NUMBER	PLAN SET NO. 8
Checked: SDT	TEXAS		
Drawn: SS	COUNTY		OF
Checked: SDT	BEXAR		8

p:\2007\27958-1 blanco rd south\design\cs\ENVIRONMENTAL\Phase IV\61021SSW3P_P4_S2-01.DGN
12/9/2007 11:30:57 AM

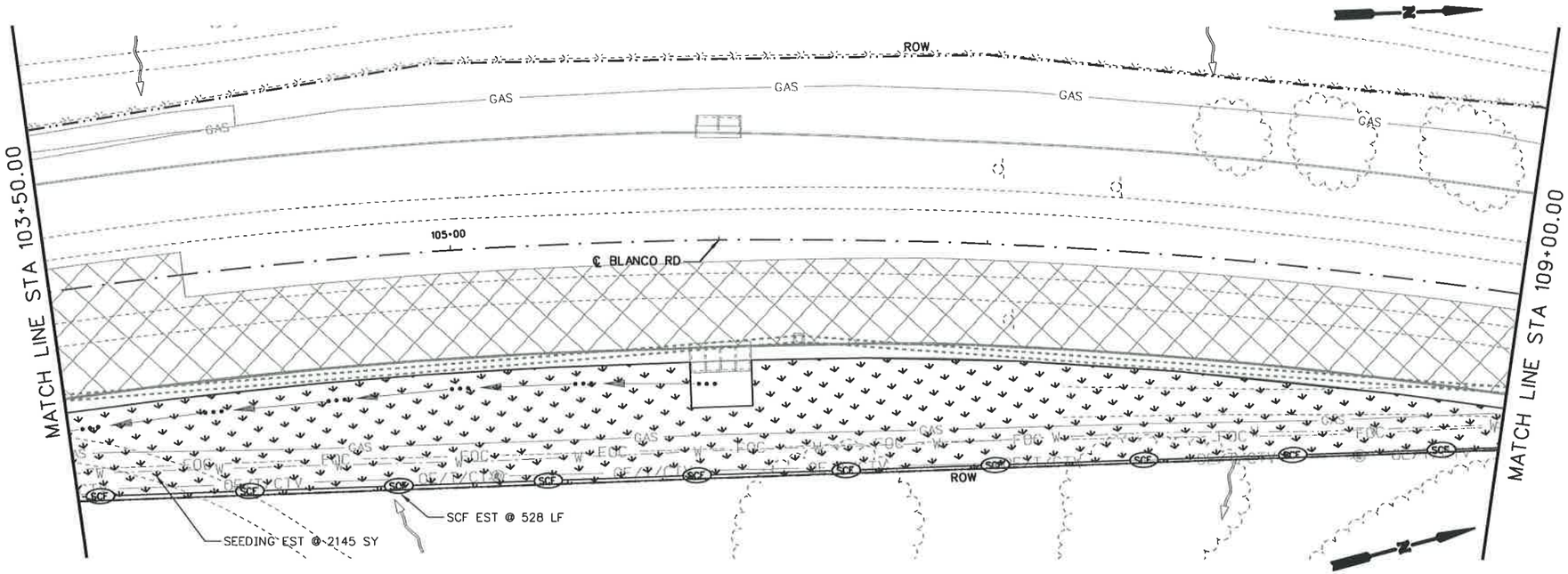

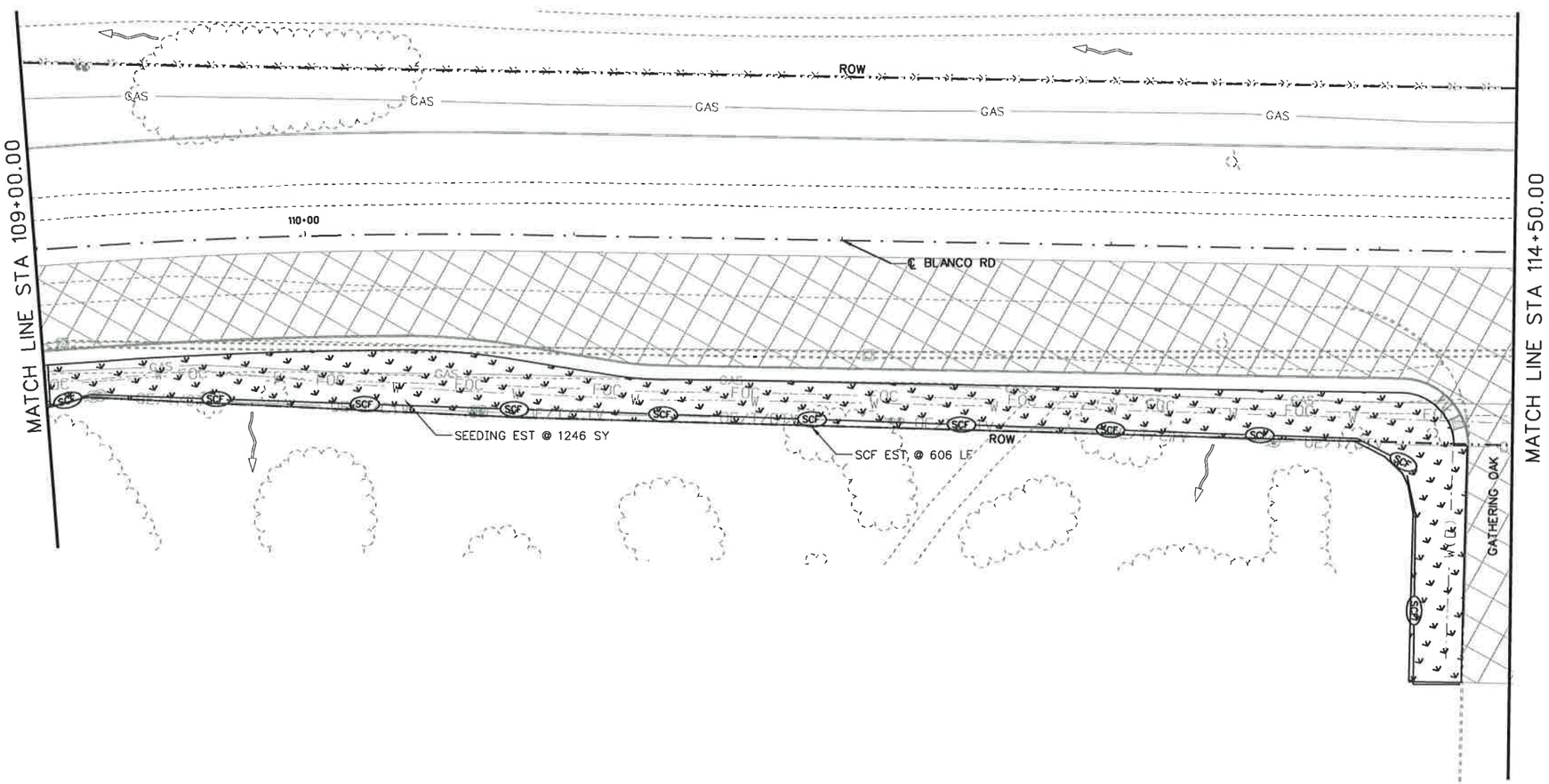

25 12.5 0 25 50
HORIZ. SCALE FEET

LEGEND

- WORKZONE
- TEMP DETOUR
- ROCK FILTER DAM (RFD)
- SEDIMENT CONTROL FENCE (SCF)
- DITCH FLOW LINE
- OVERALL DRAINAGE FLOW
- SEEDING
- SOIL RETENTION BLANKET (SRB)
- SANDBAGS FOR EROSION CONTROL

NOTES:
1. CONSTRUCTION EXITS (TY1) TO BE LOCATED IN THE FIELD AND APPROVED BY THE ENGINEER. THE SIZE OF THE CONSTRUCTION EXITS WILL BE 78 SY EACH (50' X 14'). REFER TO STATE STANDARD "EC(3)-93" FOR DETAILS.

STATE OF TEXAS
STEVEN D. TEMPLER
88656
LICENSED
PROFESSIONAL ENGINEER

STEVEN D. TEMPLER P.E. 12.09.2007
DATE

NO.	REVISION	BY	DATE

CP&Y Chiang, Patel & Yerby, Inc.

TEDSI INFRASTRUCTURE GROUP
Consulting Engineers
10999 IH 10 West • Suite 328
San Antonio, Texas 78230
(210) 858-0610

BEXAR COUNTY
PUBLIC WORKS DIVISION

F.M. 2696 (BLANCO ROAD)

SW3P LAYOUT
PHASE 4 STAGE 2
STA 103+50.00 TO STA 114+50.00

SHEET 2 OF 4

Designed: CA	STATE	BEXAR COUNTY FILE NUMBER	PLAN SET NO.
Checked: SDT	TEXAS		B15
Drawn: SS	COUNTY		OF
Checked: SDT	BEXAR		842

p:\2007\27958-1 blanco rd south\design\cs\ENVIRONMENTAL\Phase IV\6102TSSW3P_P4_S2-02.050
12/9/2007 11:30:59 AM

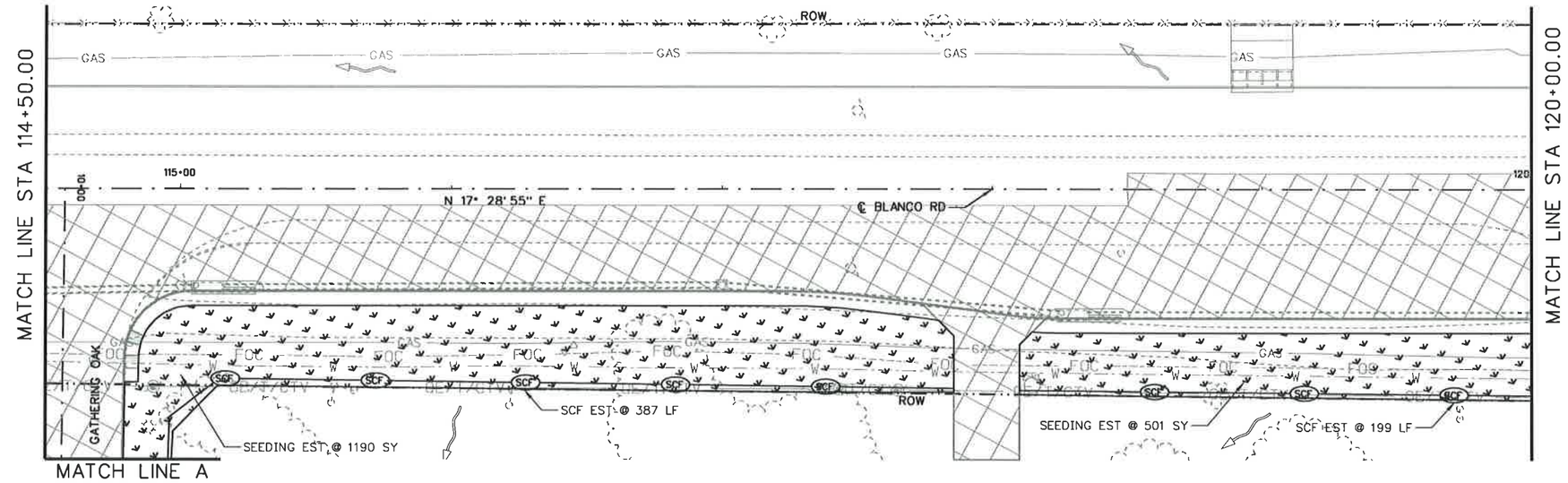

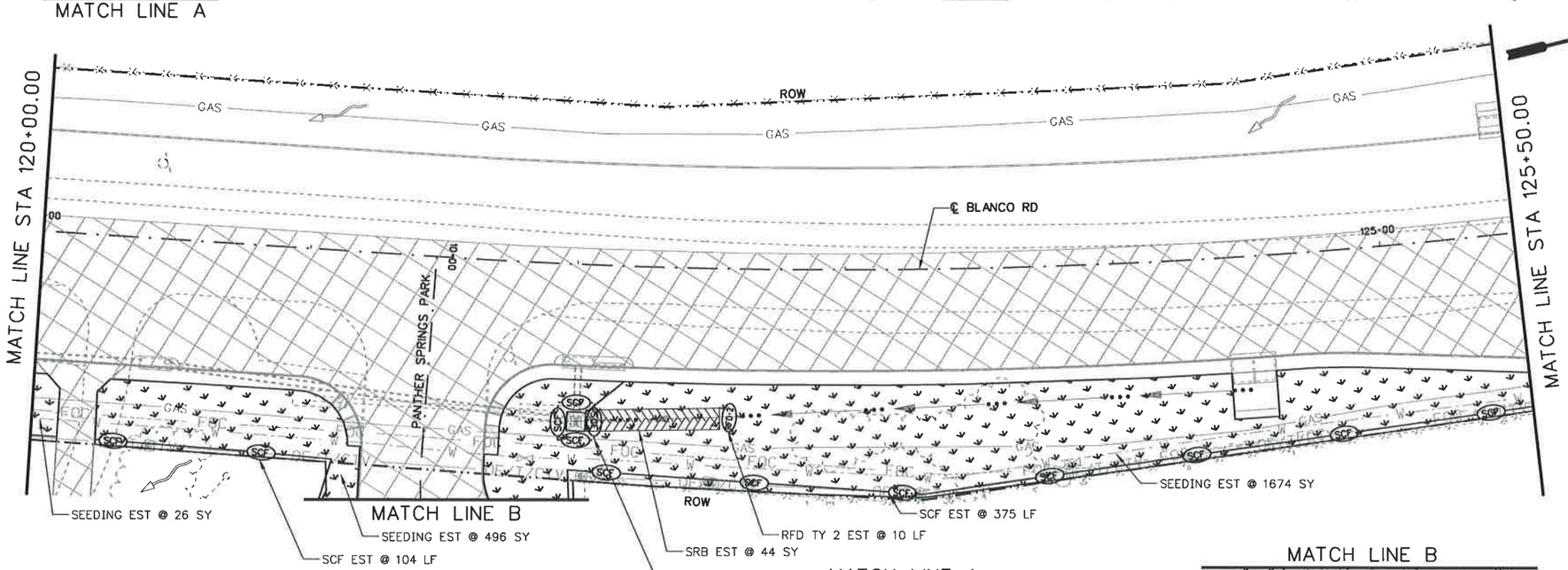

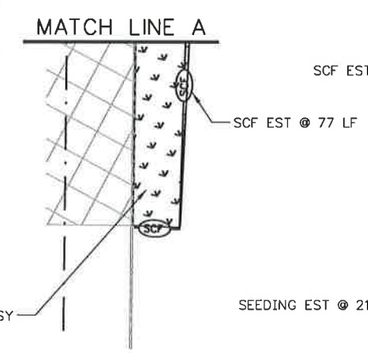

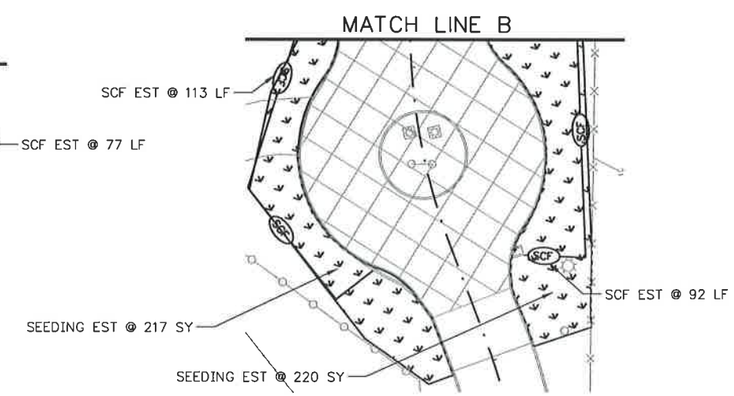

25 12.5 0 25 50
HORIZ. SCALE FEET

LEGEND

- WORKZONE
- TEMP DETOUR
- ROCK FILTER DAM (RFD)
- SEDIMENT CONTROL FENCE (SCF)
- DITCH FLOW LINE
- OVERALL DRAINAGE FLOW
- SEEDING
- SOIL RETENTION BLANKET (SRB)
- SANDBAGS FOR EROSION CONTROL

NOTES:
1. CONSTRUCTION EXITS (TY1) TO BE LOCATED IN THE FIELD AND APPROVED BY THE ENGINEER. THE SIZE OF THE CONSTRUCTION EXITS WILL BE 78 SY EACH (50' X 14'). REFER TO STATE STANDARD "EC(3)-93" FOR DETAILS.

STATE OF TEXAS
STEVEN D. TEMPLER
88656
LICENSED
PROFESSIONAL ENGINEER

STEVEN D. TEMPLER P.E. 12-09-2007
DATE

NO.	REVISION	BY	DATE

CP&Y Chiang, Patel & Yerby, Inc.

TEDSI INFRASTRUCTURE GROUP
Consulting Engineers
10999 IH 10 West • Suite 330
San Antonio, Texas 78230
(210) 858-0610

BEXAR COUNTY
PUBLIC WORKS DIVISION

F.M. 2696 (BLANCO ROAD)

SW3P LAYOUT
PHASE 4 STAGE 2
STA 114+50.00 TO STA 125+50.00

SHEET 3 OF 4

Designed: CA	STATE	BEXAR COUNTY FILE NUMBER	PLAN SET NO.
Checked: SDT	TEXAS		818
Drawn: SS	COUNTY		OF
Checked: SDT	BEXAR		842

p:\2007\27958-1 blanco rd south\design\csj\ENVIRONMENTAL\Phase IV\61021SSW3P_P4_S2-03.050
12/9/2007 11:31:01 AM

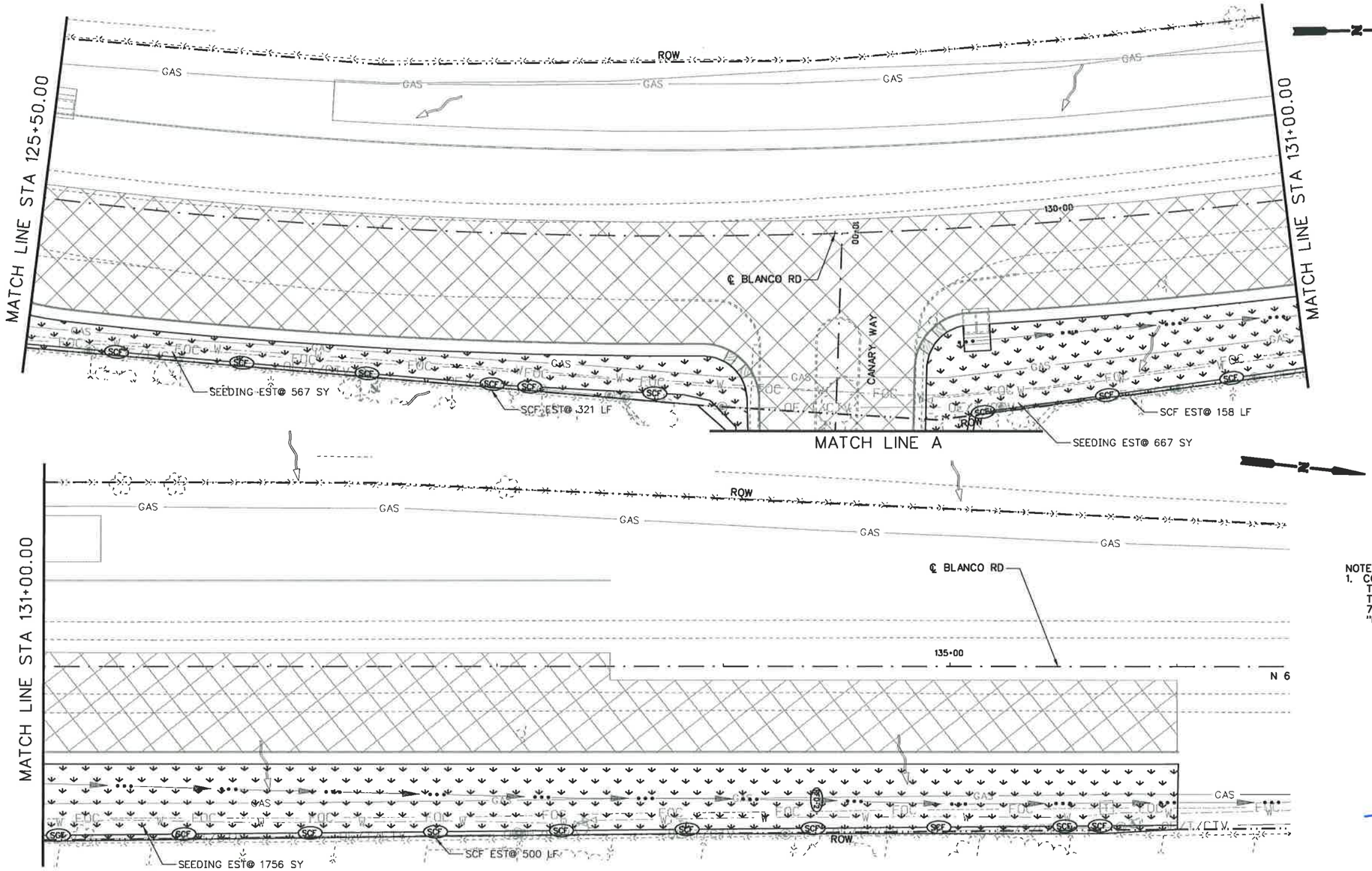

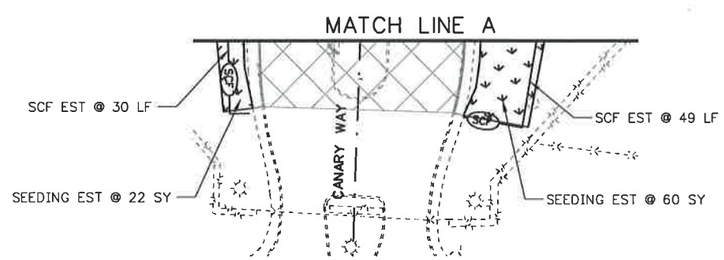

25 12.5 0 25 50
HORIZ. SCALE FEET

LEGEND

- WORKZONE
- TEMP DETOUR
- ROCK FILTER DAM (RFD)
- SEDIMENT CONTROL FENCE (SCF)
- DITCH FLOW LINE
- OVERALL DRAINAGE FLOW
- SEEDING
- SOIL RETENTION BLANKET (SRB)
- SANDBAGS FOR EROSION CONTROL

NOTES:
1. CONSTRUCTION EXITS (TY1) TO BE LOCATED IN THE FIELD AND APPROVED BY THE ENGINEER. THE SIZE OF THE CONSTRUCTION EXITS WILL BE 78 SY EACH (50' X 14'). REFER TO STATE STANDARD "EC(3)-93" FOR DETAILS.

STATE OF TEXAS
STEVEN D. TEMPLER
88656
LICENSED
PROFESSIONAL ENGINEER

STEVEN D. TEMPLER P.E. 12.09.2007
DATE

NO.	REVISION	BY	DATE

CP&Y Chiang, Patel & Yerby, Inc.

TEDSI INFRASTRUCTURE GROUP
Consulting Engineers
10999 IH 10 West • Suite 338
San Antonio, Texas 78230
(210) 858-0610

BEXAR COUNTY
PUBLIC WORKS DIVISION

F.M. 2696 (BLANCO ROAD)

SW3P LAYOUT
PHASE 4 STAGE 2
STA 125+50.00 TO STA 136+50.00

SHEET 4 OF 4

Designed: CA	STATE	BEXAR COUNTY FILE NUMBER	PLAN SET NO.
Checked: SDT	TEXAS		819
Drawn: SS	COUNTY		OF
Checked: SDT	BEXAR		842

p:\2007\27958-1 blanco rd south\design\cs\ENVIRONMENTAL\Phase IV\61027SSW3P_P4_S2-04.DGN
12/9/2007 11:31:04 AM

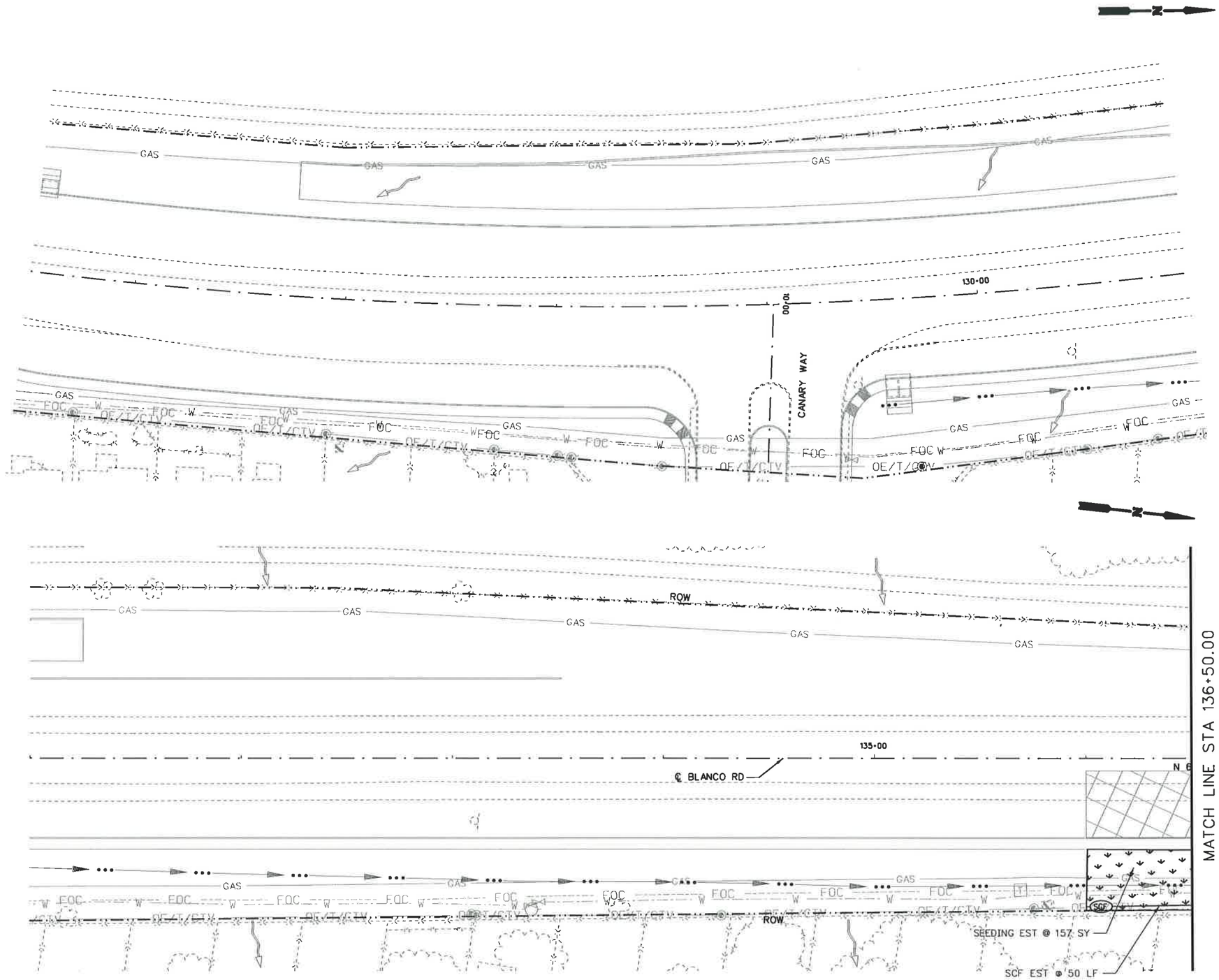

25 12.5 0 25 50
HORIZ. SCALE FEET

LEGEND

- WORKZONE
- TEMP DETOUR
- ROCK FILTER DAM (RFD)
- SEDIMENT CONTROL FENCE (SCF)
- DITCH FLOW LINE
- OVERALL DRAINAGE FLOW
- SEEDING
- SOIL RETENTION BLANKET (SRB)
- SANDBAGS FOR EROSION CONTROL

NOTES:
1. CONSTRUCTION EXITS (TY1) TO BE LOCATED IN THE FIELD AND APPROVED BY THE ENGINEER. THE SIZE OF THE CONSTRUCTION EXITS WILL BE 78 SY EACH (50' X 14'). REFER TO STATE STANDARD "EC(3)-93" FOR DETAILS.

STATE OF TEXAS
STEVEN D. TEMPLER
88656
LICENSED
PROFESSIONAL ENGINEER

STEVEN D. TEMPLER P.E. 12.09.2007
DATE

NO.	REVISION	BY	DATE

CP&Y Chiang, Patel & Yerby, Inc.

TEDSI INFRASTRUCTURE GROUP
Consulting Engineers
10999 IH 10 West • Suite 320
San Antonio, Texas 78230
(210) 858-0610

BEXAR COUNTY
PUBLIC WORKS DIVISION

F.M. 2696 (BLANCO ROAD)

SW3P LAYOUT
PHASE 4 STAGE 3
STA 125+50.00 TO STA 136+50.00

SHEET 1 OF 10

Designed: CA	STATE	BEXAR COUNTY FILE NUMBER	PLAN SET NO.
Checked: SDT	TEXAS		820
Drawn: SS	COUNTY		OF
Checked: SDT	BEXAR		842

p:\2007\27958-1 blanco rd south\design\csj\ENVIRONMENTAL\Phase IV\61027SSW3P_P4_S3-01.050
12/9/2007 11:31:05 AM

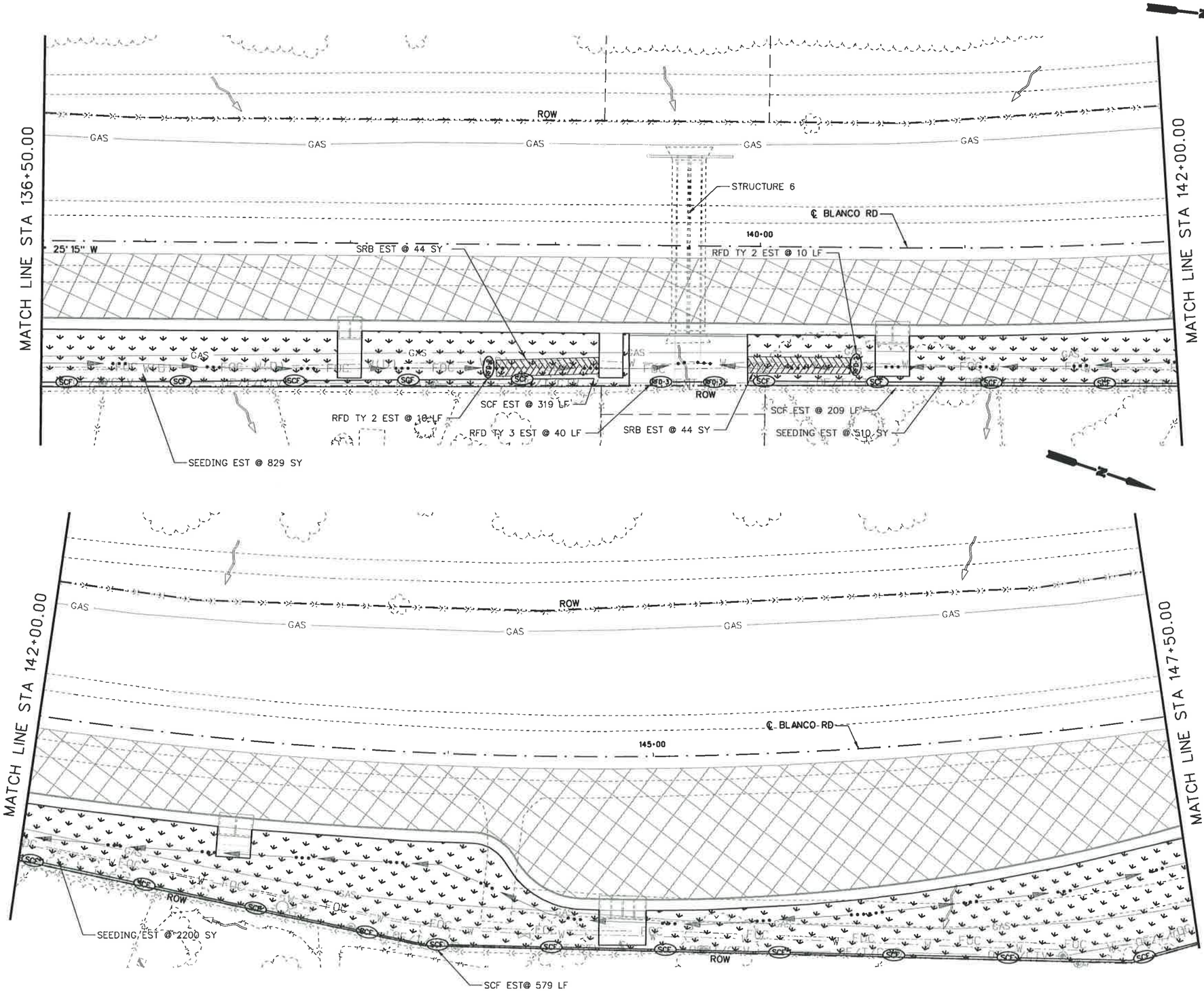

25 12.5 0 25 50
HORIZ. SCALE FEET

LEGEND

- WORKZONE
- TEMP DETOUR
- ROCK FILTER DAM (RFD)
- SEDIMENT CONTROL FENCE (SCF)
- DITCH FLOW LINE
- OVERALL DRAINAGE FLOW
- SEEDING
- SOIL RETENTION BLANKET (SRB)
- SANDBAGS FOR EROSION CONTROL

NOTES:
1. CONSTRUCTION EXITS (TY1) TO BE LOCATED IN THE FIELD AND APPROVED BY THE ENGINEER. THE SIZE OF THE CONSTRUCTION EXITS WILL BE 78 SY EACH (50' X 14'). REFER TO STATE STANDARD "EC(3)-93" FOR DETAILS.

STATE OF TEXAS
STEVEN D. TEMPLER
88656
LICENSED
PROFESSIONAL ENGINEER

STEVEN D. TEMPLER P.E. 12-09-2007
STEVEN D. TEMPLER DATE

NO.	REVISION	BY	DATE

CP&Y Chiang, Patel & Yerby, Inc.

TEDSI INFRASTRUCTURE GROUP
Consulting Engineers
10999 IH 10 West • Suite 320
San Antonio, Texas 78230
(210) 858-0610

BEXAR COUNTY
PUBLIC WORKS DIVISION

F.M. 2696 (BLANCO ROAD)

SW3P LAYOUT
PHASE 4 STAGE 3
STA 136+50.00 TO STA 147+50.00

SHEET 2 OF 10

Designed: CA	STATE	BEXAR COUNTY FILE NUMBER	PLAN SET NO.
Checked: SDT	TEXAS		821
Drawn: SS	COUNTY		OF
Checked: SDT	BEXAR		842

p:\2007\27958-1blanco rd south\design\cs\ENVIRONMENTAL\Phase IV\6102TSSW3P_P4_S3-02.050
12/9/2007 11:31:07 AM

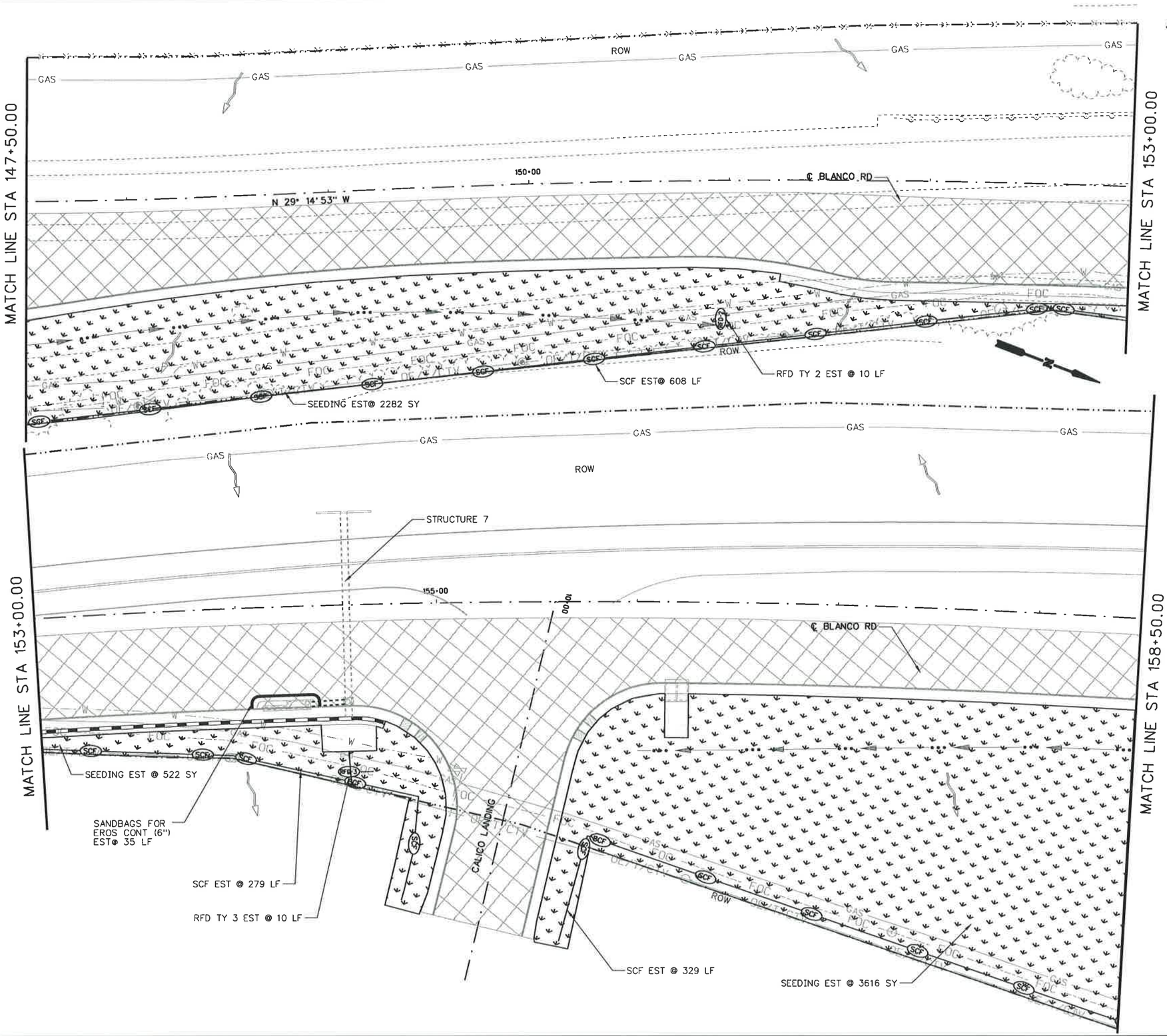

25 12.5 0 25 50
HORIZ. SCALE FEET

LEGEND

- WORKZONE
- TEMP DETOUR
- ROCK FILTER DAM (RFD)
- SEDIMENT CONTROL FENCE (SCF)
- DITCH FLOW LINE
- OVERALL DRAINAGE FLOW
- SEEDING
- SOIL RETENTION BLANKET (SRB)
- SANDBAGS FOR EROSION CONTROL

NOTES:
1. CONSTRUCTION EXITS (TY1) TO BE LOCATED IN THE FIELD AND APPROVED BY THE ENGINEER. THE SIZE OF THE CONSTRUCTION EXITS WILL BE 78 SY EACH (50' X 14'). REFER TO STATE STANDARD "EC(3)-93" FOR DETAILS.

STATE OF TEXAS
STEVEN D. TEMPLER
88656
LICENSED
PROFESSIONAL ENGINEER

STEVEN D. TEMPLER P.E. 12-09-2007
DATE

NO.	REVISION	BY	DATE

CP&Y Chiang, Patel & Yerby, Inc.

TEDSI INFRASTRUCTURE GROUP
Consulting Engineers
10999 IH 10 West • Suite 350
San Antonio, Texas 78230
(210) 858-0610

BEXAR COUNTY
PUBLIC WORKS DIVISION

F.M. 2696 (BLANCO ROAD)

SW3P LAYOUT
PHASE 4 STAGE 3
STA 147+50.00 TO STA 158+50.00

SHEET 3 OF 10

Designed: CA	STATE	BEXAR COUNTY FILE NUMBER	PLAN SET NO. 826
Checked: SDT	TEXAS		OF
Drawn: SS	COUNTY		842
Checked: SDT	BEXAR		

p:\2007\27958-1 blanco rd south\design\cs\ENVIRONMENTAL\Phase IV\61027SSW3P_P4_S3-03.050
12/9/2007 11:31:09 AM

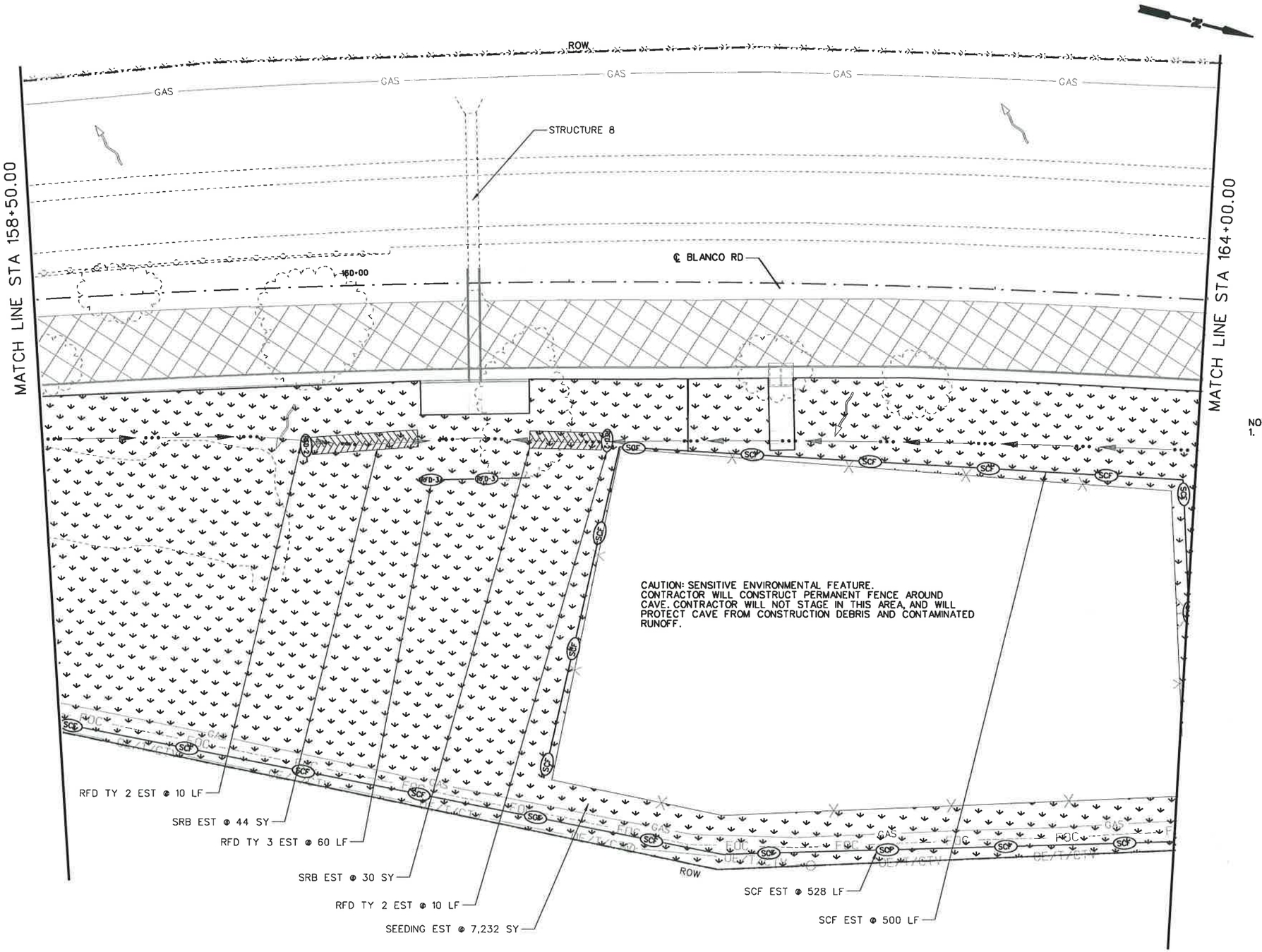

25 12.5 0 25 50
HORIZ. SCALE FEET

LEGEND

- WORKZONE
- TEMP DETOUR
- ROCK FILTER DAM (RFD)
- SEDIMENT CONTROL FENCE (SCF)
- DITCH FLOW LINE
- OVERALL DRAINAGE FLOW
- SEEDING
- SOIL RETENTION BLANKET (SRB)
- SANDBAGS FOR EROSION CONTROL

NOTES:
1. CONSTRUCTION EXITS (TY1) TO BE LOCATED IN THE FIELD AND APPROVED BY THE ENGINEER. THE SIZE OF THE CONSTRUCTION EXITS WILL BE 78 SY EACH (50' X 14'). REFER TO STATE STANDARD "EC(3)-93" FOR DETAILS.

STATE OF TEXAS
STEVEN D. TEMPLER
88656
LICENSED
PROFESSIONAL ENGINEER

STEVEN D. TEMPLER — DATE 12-09-2007

NO.	REVISION	BY	DATE

CP&Y Chiang, Patel & Yerby, Inc.

TEDSI INFRASTRUCTURE GROUP
Consulting Engineers
10999 IH 10 West • Suite 320
San Antonio, Texas 78230
(210) 858-0610

BEXAR COUNTY
PUBLIC WORKS DIVISION

F.M. 2696 (BLANCO ROAD)

SW3P LAYOUT
PHASE 4 STAGE 3
STA 158+50 TO STA 164+00.00

SHEET 4 OF 10

Designed: CA	STATE	BEXAR COUNTY FILE NUMBER	PLAN SET NO.
Checked: SDT	TEXAS		829
Drawn: SS	COUNTY		OF
Checked: SDT	BEXAR		842

p:\2007\27958-1 blanco rd south\design\cs\ENVIRONMENTAL\Phase IV\61021SSW3P_P4_S3-04.dgn
12/9/2007 11:31:11 AM

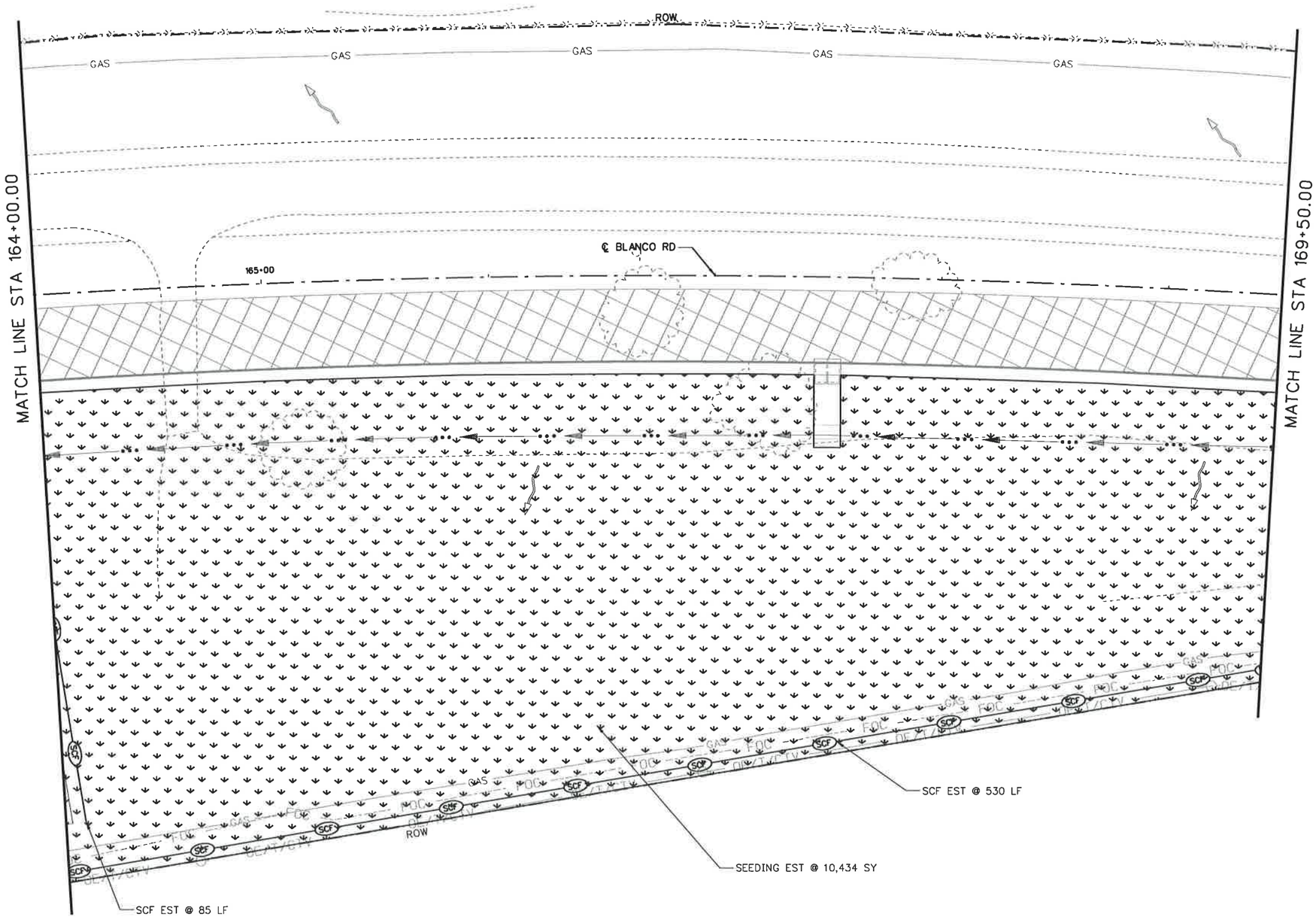

25 12.5 0 25 50
HORIZ. SCALE FEET

LEGEND

- WORKZONE
- TEMP DETOUR
- ROCK FILTER DAM (RFD)
- SEDIMENT CONTROL FENCE (SCF)
- DITCH FLOW LINE
- OVERALL DRAINAGE FLOW
- SEEDING
- SOIL RETENTION BLANKET (SRB)
- SANDBAGS FOR EROSION CONTROL

NOTES:
1. CONSTRUCTION EXITS (TY1) TO BE LOCATED IN THE FIELD AND APPROVED BY THE ENGINEER. THE SIZE OF THE CONSTRUCTION EXITS WILL BE 78 SY EACH (50' X 14'). REFER TO STATE STANDARD "EC(3)-93" FOR DETAILS.

STATE OF TEXAS
STEVEN D. TEMPLER
88656
LICENSED
PROFESSIONAL ENGINEER

STEVEN D. TEMPLER — DATE 12.09.2007

NO.	REVISION	BY	DATE

CP&Y Chiang, Patel & Yerby, Inc.

TEDSI INFRASTRUCTURE GROUP
Consulting Engineers
16999 IH 10 West • Suite 320
San Antonio, Texas 78230
(210) 858-0610

BEXAR COUNTY
PUBLIC WORKS DIVISION

F.M. 2696 (BLANCO ROAD)

SW3P LAYOUT
PHASE 4 STAGE 3
STA 164+00 TO STA 169+50.00

SHEET 5 OF 10

Designed: CA	STATE	BEXAR COUNTY FILE NUMBER	PLAN SET NO.
Checked: SDT	TEXAS		824
Drawn: SS	COUNTY		OF
Checked: SDT	BEXAR		842

p:\2007\27958-1 blanco rd south\design\cs\ENVIRONMENTAL\Phase IV\6102TSSW3P_P4_S3-05.050
12/9/2007 11:31:12 AM

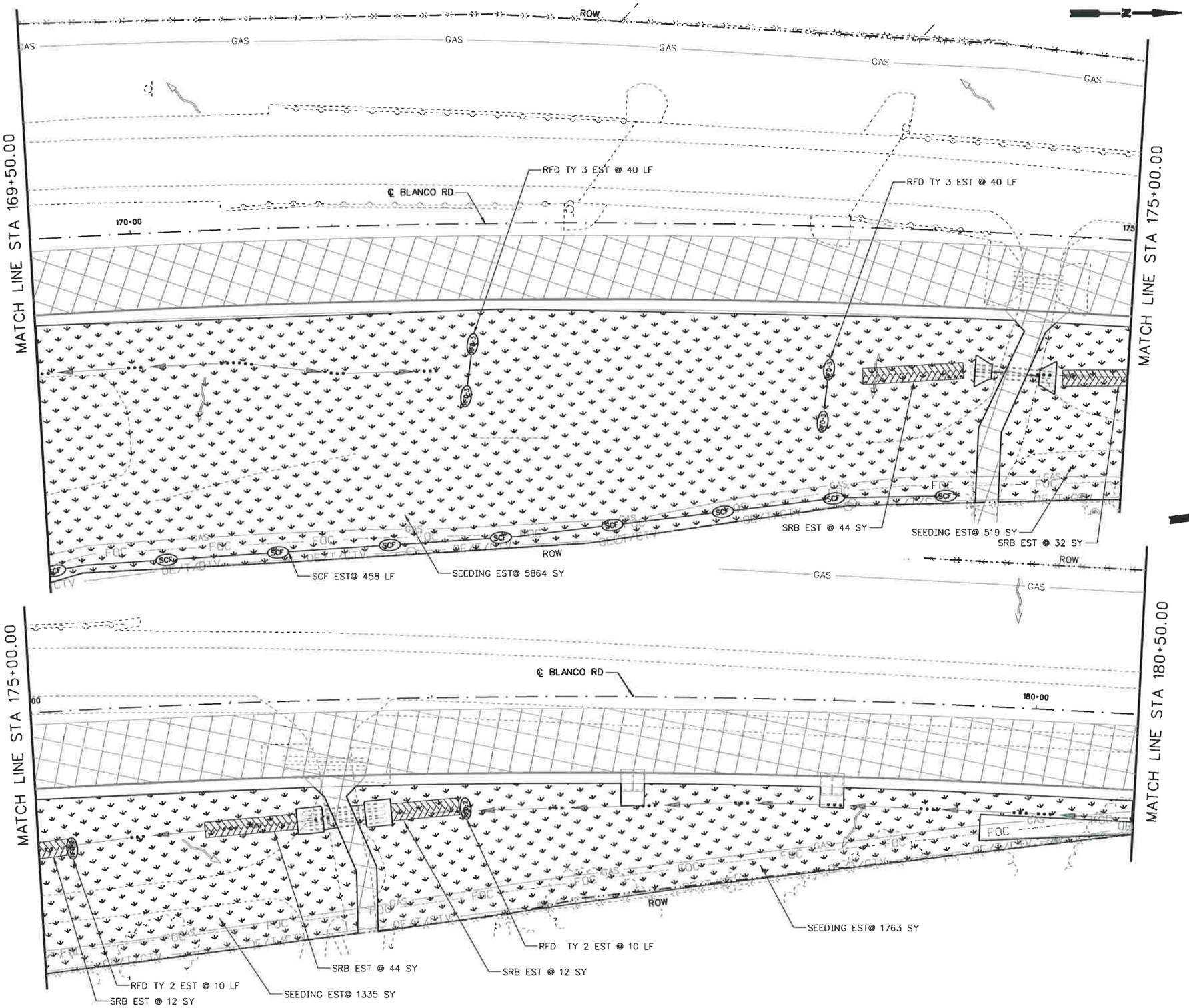

25 12.5 0 25 50
SCALE FEET

LEGEND

- WORKZONE
- TEMP DETOUR
- ROCK FILTER DAM (RFD)
- SEDIMENT CONTROL FENCE (SCF)
- DITCH FLOW LINE
- OVERALL DRAINAGE FLOW
- SEEDING
- SOIL RETENTION BLANKET (SRB)
- SANDBAGS FOR EROSION CONTROL

NOTES:
1. CONSTRUCTION EXITS (TY1) TO BE LOCATED IN THE FIELD AND APPROVED BY THE ENGINEER. THE SIZE OF THE CONSTRUCTION EXITS WILL BE 78 SY EACH (50' X 14'). REFER TO STATE STANDARD "EC(3)-93" FOR DETAILS.

STATE OF TEXAS
STEVEN D. TEMPLER
88656
LICENSED
PROFESSIONAL ENGINEER

STEVEN D. TEMPLER P.E. 12-09-2007
DATE

NO.	REVISION	BY	DATE

CP&Y Chiang, Patel & Yerby, Inc.

TEDSI INFRASTRUCTURE GROUP
Consulting Engineers
10999 IH 10 West • Suite 320
San Antonio, Texas 78230
(210) 858-0610

BEXAR COUNTY
PUBLIC WORKS DIVISION

F.M. 2696 (BLANCO ROAD)

SW3P LAYOUT

PHASE 4 STAGE 3
STA 169+50.00 TO STA 180+50.00

SHEET 6 OF 10

Designed: CA	STATE	BEXAR COUNTY FILE NUMBER	PLAN SET NO.
Checked: SDT	TEXAS		825
Drawn: SS	COUNTY		OF
Checked: SDT	BEXAR		842

p:\2007\27958-1 blanco rd south\design\csj\ENVIRONMENTAL\Phase IV\6102TSSW3P_P4_S3-06.050
12/9/2007 11:31:15 AM

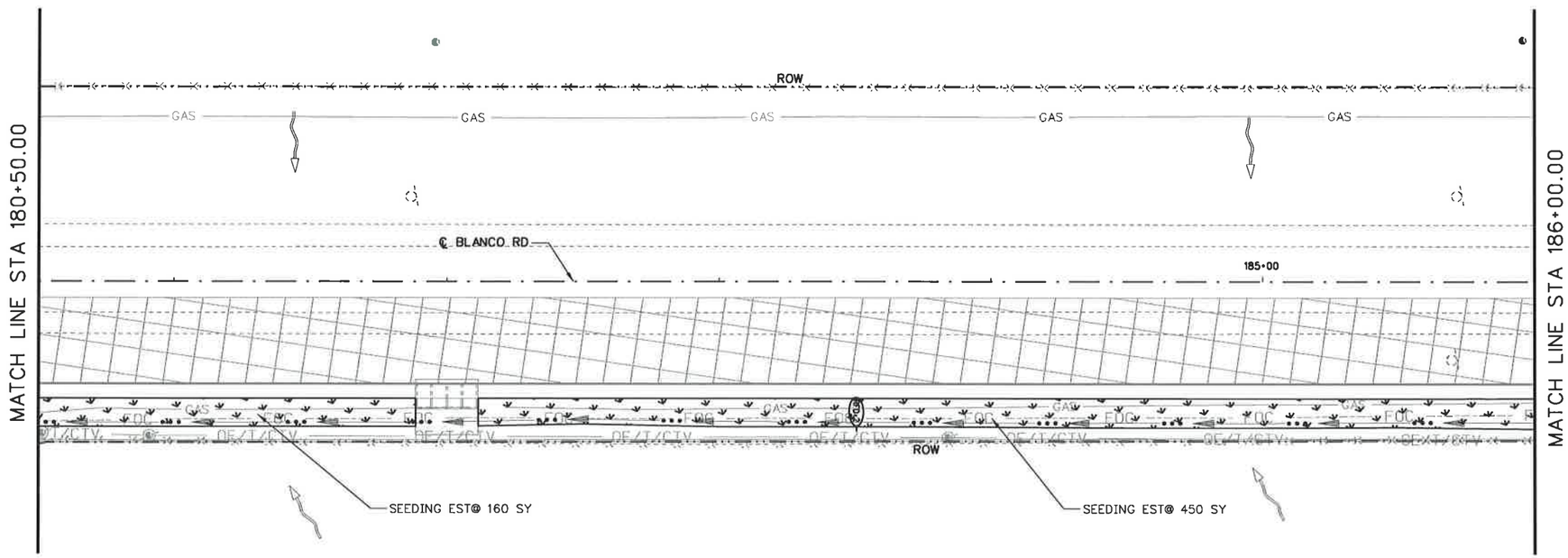

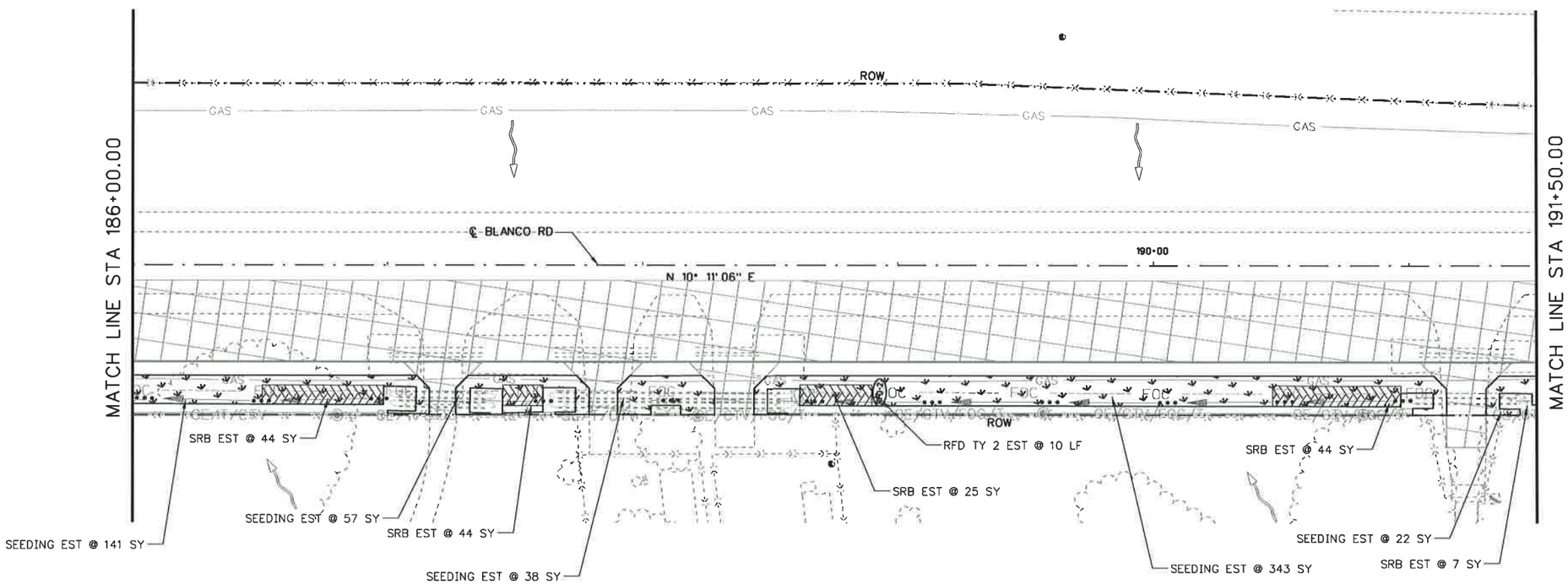

25 12.5 0 25 50
HORIZ. SCALE FEET

LEGEND

- WORKZONE
- TEMP DETOUR
- ROCK FILTER DAM (RFD)
- SEDIMENT CONTROL FENCE (SCF)
- DITCH FLOW LINE
- OVERALL DRAINAGE FLOW
- SEEDING
- SOIL RETENTION BLANKET (SRB)
- SANDBAGS FOR EROSION CONTROL

NOTES:
1. CONSTRUCTION EXITS (TY1) TO BE LOCATED IN THE FIELD AND APPROVED BY THE ENGINEER. THE SIZE OF THE CONSTRUCTION EXITS WILL BE 78 SY EACH (50' X 14'). REFER TO STATE STANDARD "EC(3)-93" FOR DETAILS.

STATE OF TEXAS
STEVEN D. TEMPLER
88656
LICENSED
PROFESSIONAL ENGINEER

STEVEN D. TEMPLER P.E. 12.09.2007
DATE

NO.	REVISION	BY	DATE

CP&Y Chiang, Patel & Yerby, Inc.

TEDSI INFRASTRUCTURE GROUP
Consulting Engineers
10999 IH 10 West • Suite 310
San Antonio, Texas 78230
(210) 858-0610

BEXAR COUNTY
PUBLIC WORKS DIVISION

F.M. 2696 (BLANCO ROAD)

SW3P LAYOUT

PHASE 4 STAGE 3
STA 180+50.00 TO STA 191+50.00

SHEET 7 OF 10

Designed: CA	STATE	BEXAR COUNTY FILE NUMBER	PLAN SET NO.
Checked: SDT	TEXAS		326
Drawn: SS	COUNTY		OF
Checked: SDT	BEXAR		342

p:\2007\27958-1 blanco rd south\design\cs\ENVIRONMENTAL\Phase IV\6102TSSW3P_P4_S3-07.050
12/9/2007 11:31:16 AM

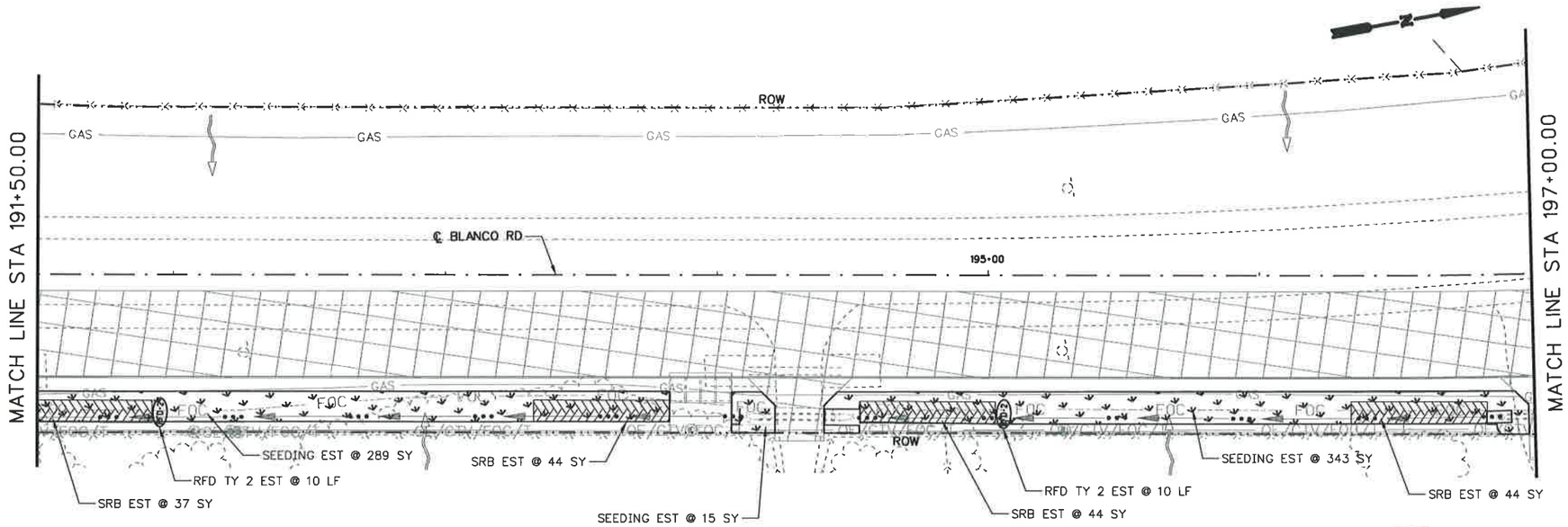

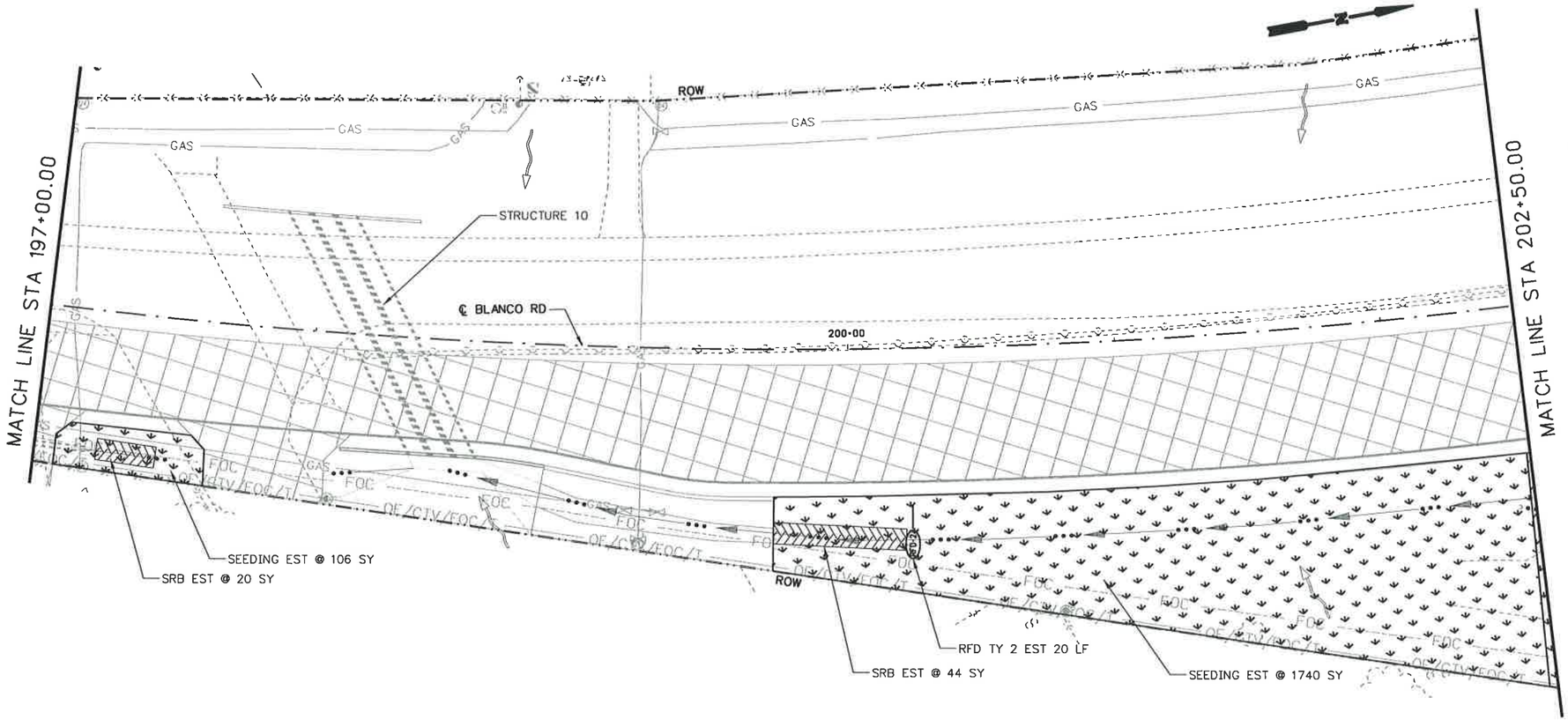

25 12.5 0 25 50
HORIZ. SCALE FEET

LEGEND

- WORKZONE
- TEMP DETOUR
- ROCK FILTER DAM (RFD)
- SEDIMENT CONTROL FENCE (SCF)
- DITCH FLOW LINE
- OVERALL DRAINAGE FLOW
- SEEDING
- SOIL RETENTION BLANKET (SRB)
- SANDBAGS FOR EROSION CONTROL

NOTES:
1. CONSTRUCTION EXITS (TY1) TO BE LOCATED IN THE FIELD AND APPROVED BY THE ENGINEER. THE SIZE OF THE CONSTRUCTION EXITS WILL BE 78 SY EACH (50' X 14'). REFER TO STATE STANDARD "EC(3)-93" FOR DETAILS.

STATE OF TEXAS
STEVEN D. TEMPLER
88656
LICENSED
PROFESSIONAL ENGINEER

STEVEN D. TEMPLER P.E. 12.09.2007
DATE

NO.	REVISION	BY	DATE

CP&Y Chiang, Patel & Yerby, Inc.

TEDSI INFRASTRUCTURE GROUP
Consulting Engineers
10999 IH 10 West • Suite 320
San Antonio, Texas 78230
(210) 858-0610

BEXAR COUNTY
PUBLIC WORKS DIVISION

F.M. 2696 (BLANCO ROAD)

SW3P LAYOUT
PHASE 4 STAGE 3
STA 191+50.00 TO STA 202+50.00

SHEET 8 OF 10

Designed: CA	STATE	BEXAR COUNTY FILE NUMBER	PLAN SET NO. 827
Checked: SDT	TEXAS		OF
Drawn: SS	COUNTY		842
Checked: SDT	BEXAR		

p:\2007\27958-1 blanco rd south\design\ces\ENVIRONMENTAL\Phase IV\61021SSW3P_P4_S3-08.050
12/9/2007 11:31:19 AM

25 12.5 0 25 50
HORIZ. SCALE FEET

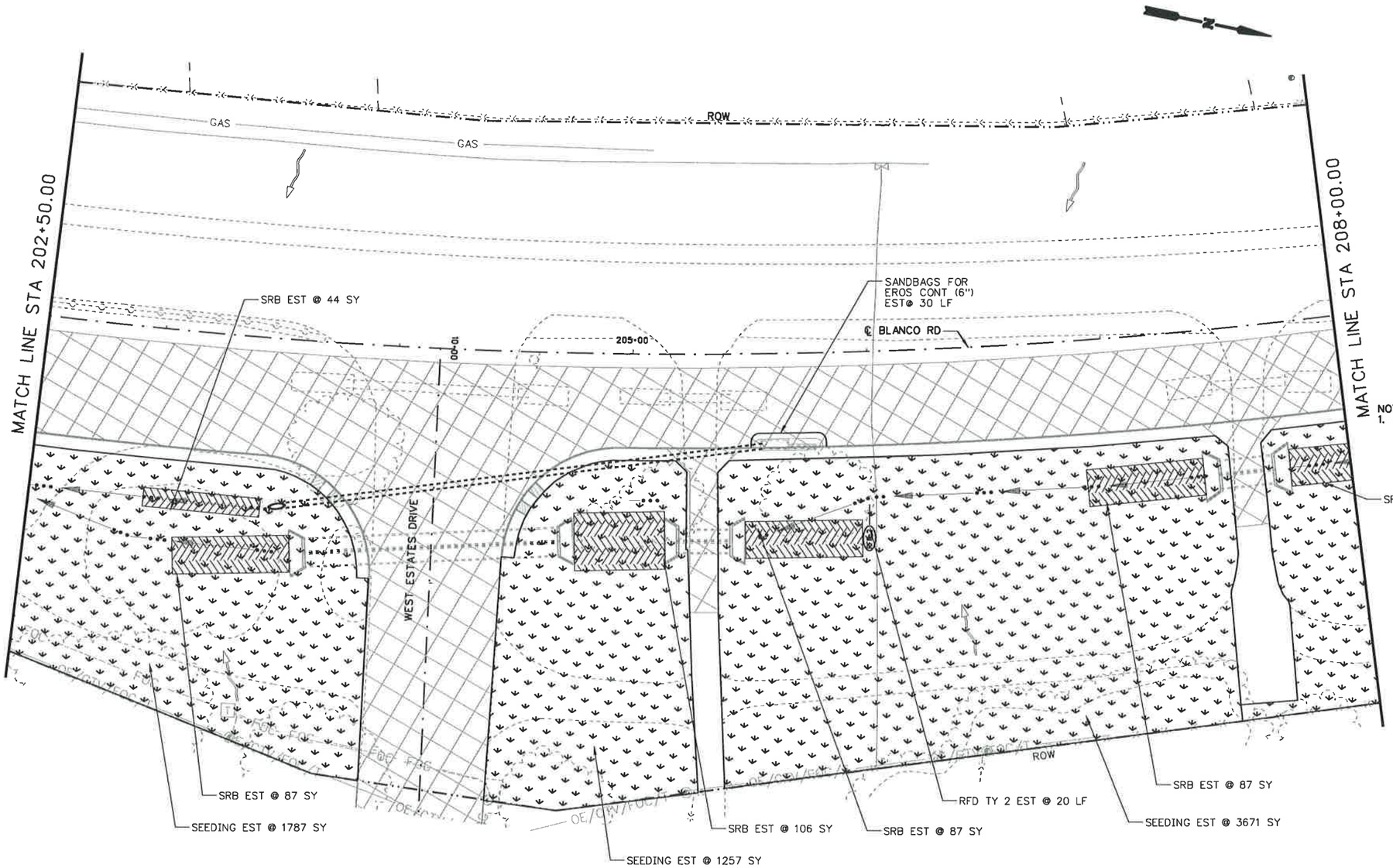

LEGEND

- WORKZONE
- TEMP DETOUR
- (RFD) ROCK FILTER DAM (RFD)
- (SCF) SEDIMENT CONTROL FENCE (SCF)
- DITCH FLOW LINE
- OVERALL DRAINAGE FLOW
- SEEDING
- SOIL RETENTION BLANKET (SRB)
- SANDBAGS FOR EROSION CONTROL

NOTES:
1. CONSTRUCTION EXITS (TY1) TO BE LOCATED IN THE FIELD AND APPROVED BY THE ENGINEER. THE SIZE OF THE CONSTRUCTION EXITS WILL BE 78 SY EACH (50' X 14'). REFER TO STATE STANDARD "EC(3)-93" FOR DETAILS.

STATE OF TEXAS
STEVEN D. TEMPLER
88656
LICENSED
PROFESSIONAL ENGINEER

STEVEN D. TEMPLER P.E. 12-09-2007
STEVEN D. TEMPLER DATE

NO.	REVISION	BY	DATE

CP&Y Chiang, Patel & Yerby, Inc.

TEDSI INFRASTRUCTURE GROUP
Consulting Engineers
10999 IH 10 West • Suite 320
San Antonio, Texas 78230
(210) 858-0610

BEXAR COUNTY
PUBLIC WORKS DIVISION

F.M. 2696 (BLANCO ROAD)

SW3P LAYOUT
PHASE 4 STAGE 3
STA 202+50.00 TO STA 208+00.00

SHEET 9 OF 10

Designed: CA	STATE	BEXAR COUNTY FILE NUMBER	PLAN SET NO.
Checked: SDT	TEXAS		82B
Drawn: SS	COUNTY		OF
Checked: SDT	BEXAR		842

p:\2007\27958-1 blanco rd south\design\csj\ENVIRONMENTAL\Phase IV\61027SSW3P_P4_S3-09.dgn
12/9/2007 11:31:20 AM

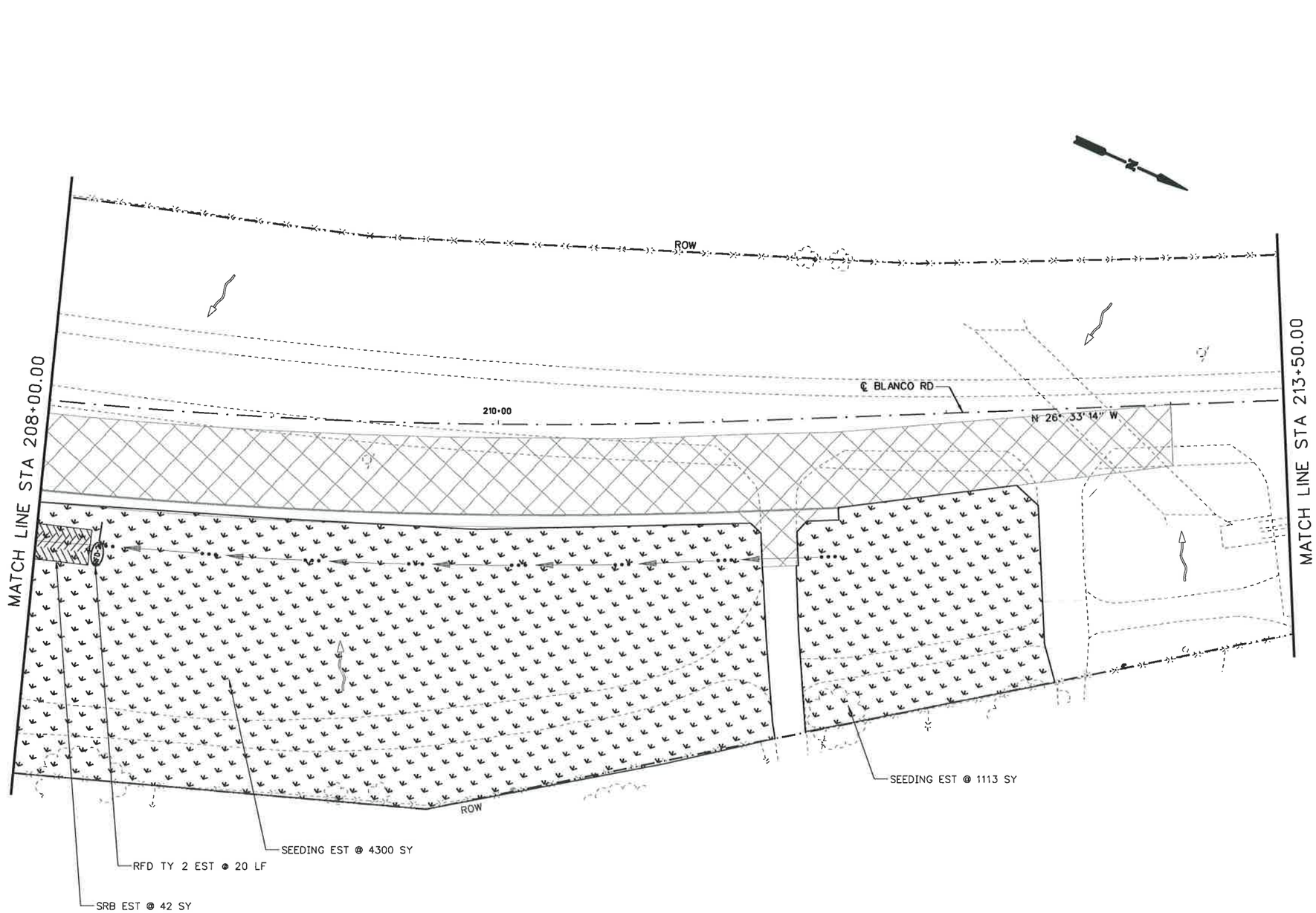

LEGEND

- WORKZONE
- TEMP DETOUR
- ROCK FILTER DAM (RFD)
- SEDIMENT CONTROL FENCE (SCF)
- DITCH FLOW LINE
- OVERALL DRAINAGE FLOW
- SEEDING
- SOIL RETENTION BLANKET (SRB)
- SANDBAGS FOR EROSION CONTROL

NOTES:
1. CONSTRUCTION EXITS (TY1) TO BE LOCATED IN THE FIELD AND APPROVED BY THE ENGINEER. THE SIZE OF THE CONSTRUCTION EXITS WILL BE 78 SY EACH (50' X 14'). REFER TO STATE STANDARD "EC(3)-93" FOR DETAILS.

STATE OF TEXAS
STEVEN D. TEMPLER
88656
LICENSED
PROFESSIONAL ENGINEER

STEVEN D. TEMPLER — DATE 12.05.2007

NO.	REVISION	BY	DATE

CP&Y Chiang, Patel & Yerby, Inc.

TEDSI INFRASTRUCTURE GROUP
Consulting Engineers
10999 IH 10 West • Suite 320
San Antonio, Texas 78230
(210) 858-0610

BEXAR COUNTY
PUBLIC WORKS DIVISION

F.M. 2696 (BLANCO ROAD)

SW3P LAYOUT

PHASE 4 STAGE 3
STA 208+00.00 TO STA 213+50.00

SHEET 10 OF 10

Designed: CA	STATE	BEXAR COUNTY FILE NUMBER	PLAN SET NO.
Checked: SDT	TEXAS		829
Drawn: SS	COUNTY		OF
Checked: SDT	BEXAR		842

p:\2007\27958-1 blanco rd south\design\cs3\ENVIRONMENTAL\Phase IV\61027SSWXP_P4_S3-10.DGN
12/9/2007 11:31:22 AM

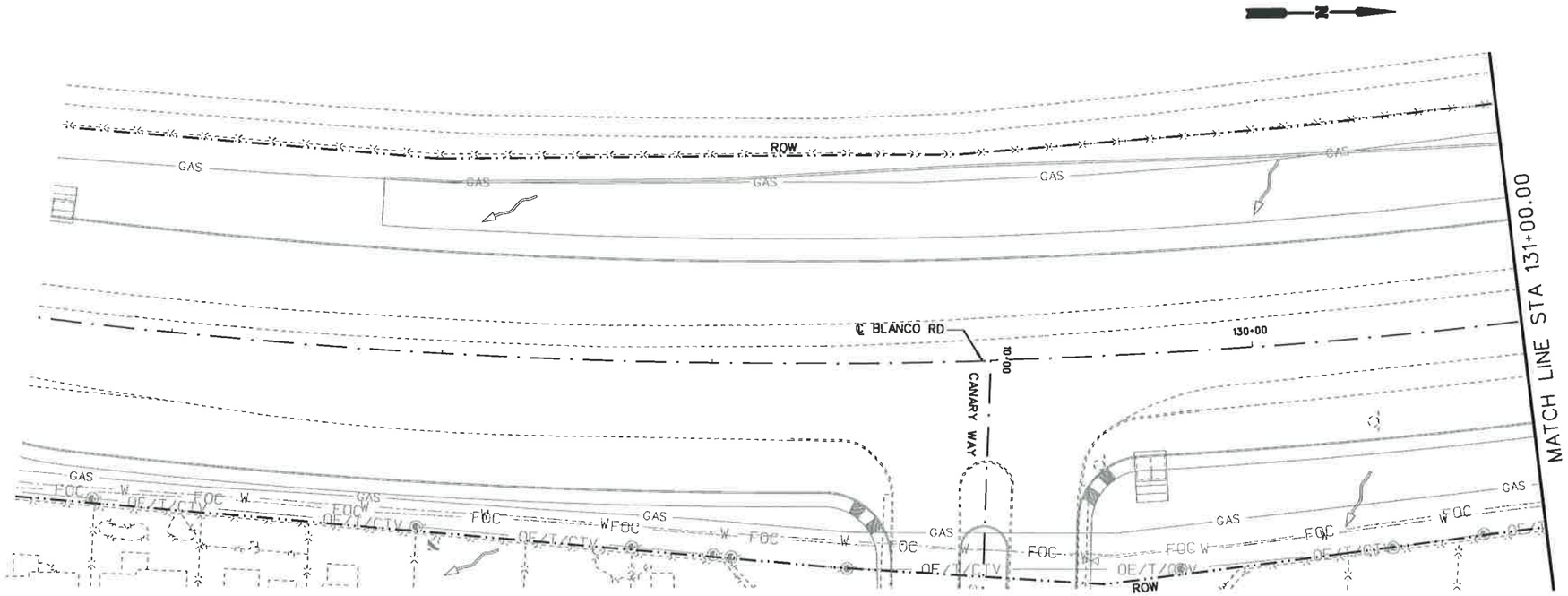

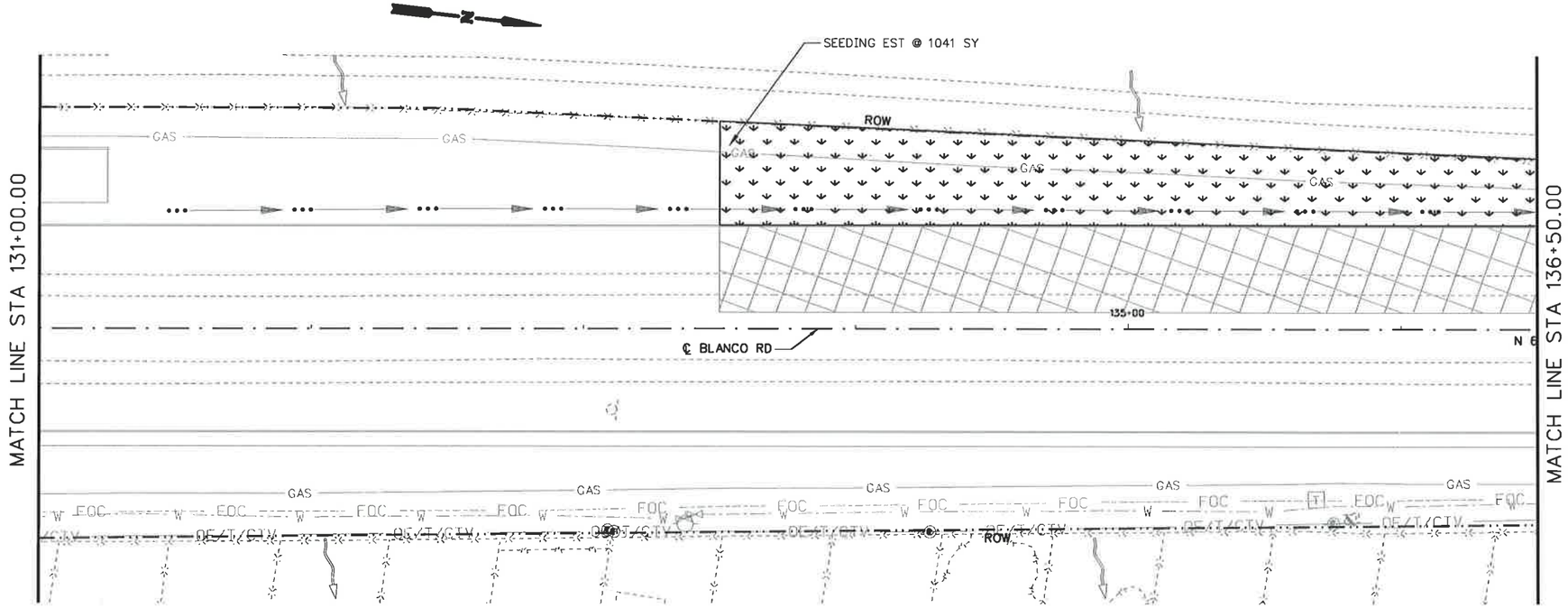

25 12.5 0 25 50
HORIZ. SCALE FEET

LEGEND

- WORKZONE
- TEMP DETOUR
- ROCK FILTER DAM (RFD)
- SEDIMENT CONTROL FENCE (SCF)
- DITCH FLOW LINE
- OVERALL DRAINAGE FLOW
- SEEDING
- SOIL RETENTION BLANKET (SRB)
- SANDBAGS FOR EROSION CONTROL

NOTES:
1. CONSTRUCTION EXITS (TY1) TO BE LOCATED IN THE FIELD AND APPROVED BY THE ENGINEER. THE SIZE OF THE CONSTRUCTION EXITS WILL BE 78 SY EACH (50' X 14'). REFER TO STATE STANDARD "EC(3)-93" FOR DETAILS.

STATE OF TEXAS
STEVEN D. TEMPLER
88656
LICENSED
PROFESSIONAL ENGINEER

STEVEN D. TEMPLER P.E. 12-09-2007
DATE

NO.	REVISION	BY	DATE

CP&Y Chiang, Patel & Yerby, Inc.

TEDSI INFRASTRUCTURE GROUP
Consulting Engineers
10999 IH 10 West • Suite 320
San Antonio, Texas 78230
(210) 858-0610

BEXAR COUNTY
PUBLIC WORKS DIVISION

F.M. 2696 (BLANCO ROAD)

SW3P LAYOUT

PHASE 4 STAGE 4
STA 125+50.00 TO STA 136+50.00

SHEET 1 OF 8

Designed: CA	STATE	BEXAR COUNTY FILE NUMBER	PLAN SET NO.
Checked: SDT	TEXAS		830
Drawn: SS	COUNTY		OF
Checked: SDT	BEXAR		842

p:\2007\27958-1 blanco rd south\design\cs\ENVIRONMENTAL\Phase IV\61027SSW3P_P4_S4-01.DGN
12/9/2007 11:31:24 AM

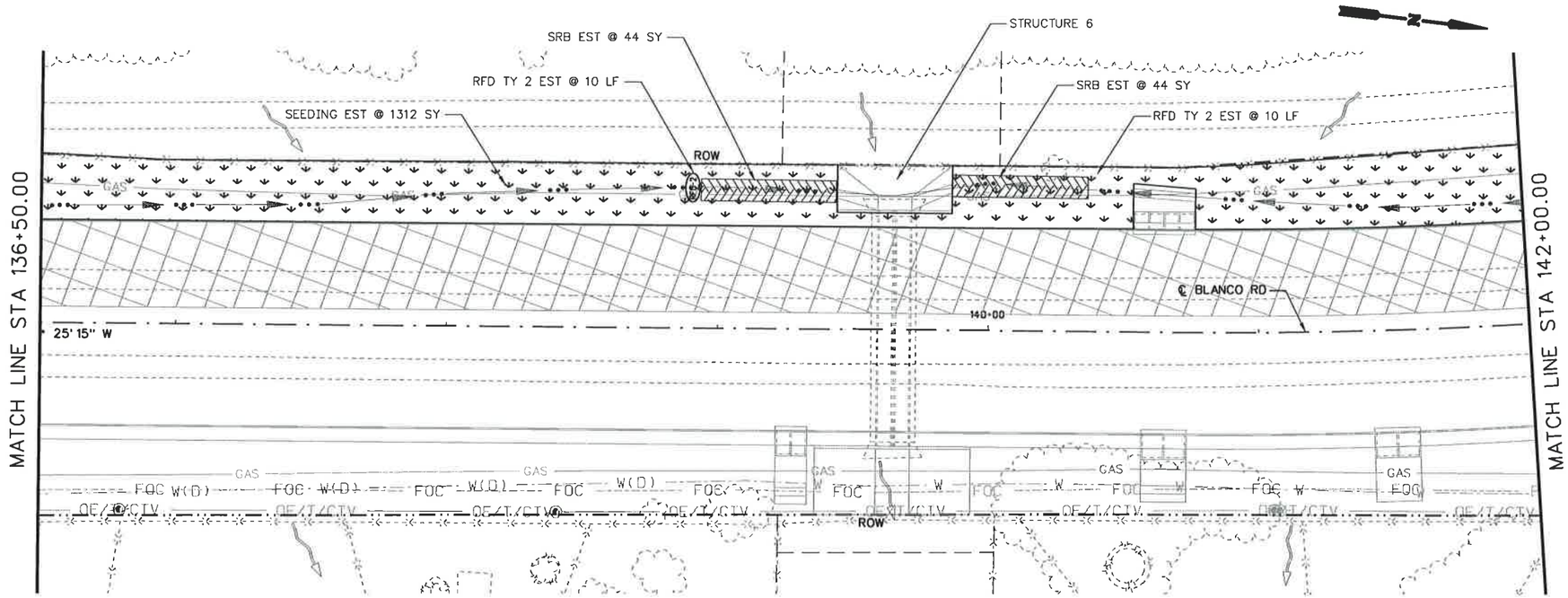

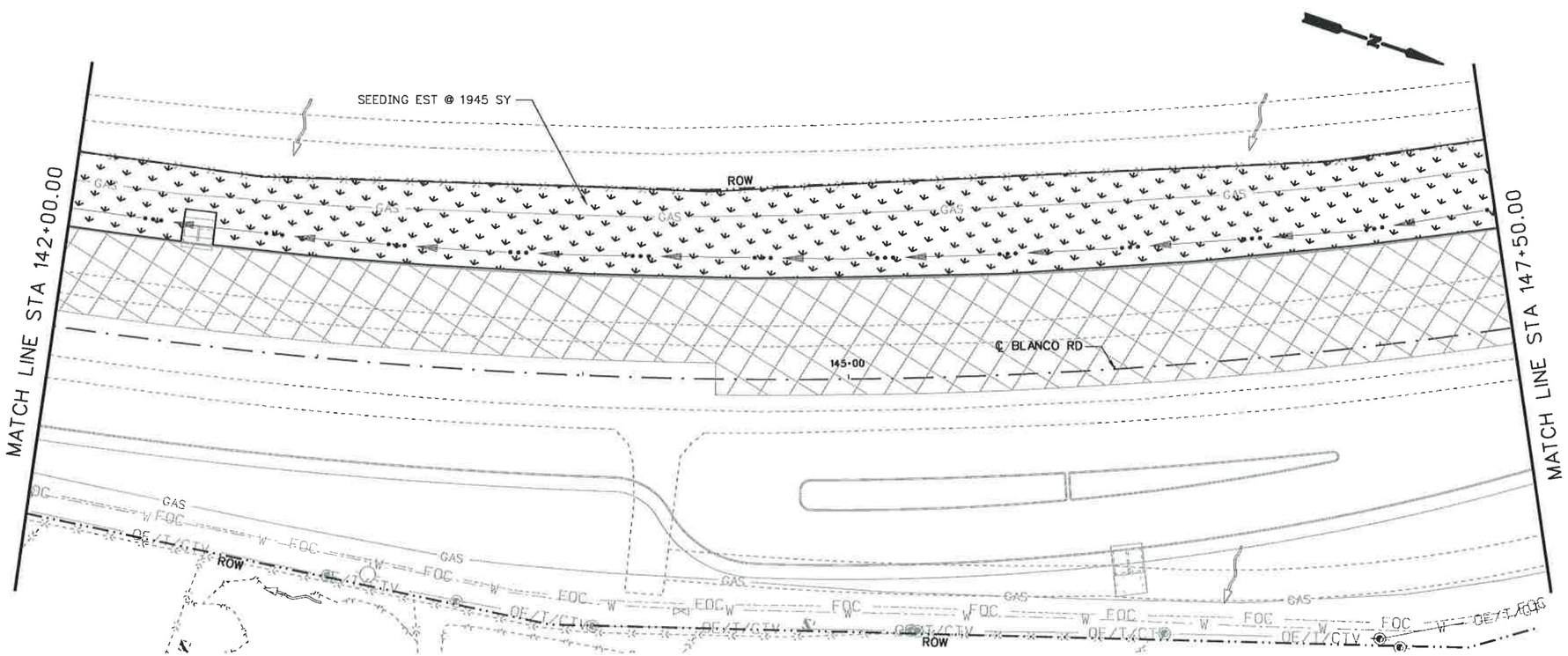

25 12.5 0 25 50
HORIZ. SCALE FEET

LEGEND

- WORKZONE
- TEMP DETOUR
- (RFD) ROCK FILTER DAM (RFD)
- (SCF) SEDIMENT CONTROL FENCE (SCF)
- DITCH FLOW LINE
- OVERALL DRAINAGE FLOW
- SEEDING
- SOIL RETENTION BLANKET (SRB)
- SANDBAGS FOR EROSION CONTROL

NOTES:
1. CONSTRUCTION EXITS (TY1) TO BE LOCATED IN THE FIELD AND APPROVED BY THE ENGINEER. THE SIZE OF THE CONSTRUCTION EXITS WILL BE 78 SY EACH (50' X 14'). REFER TO STATE STANDARD "EC(3)-93" FOR DETAILS.

STATE OF TEXAS
STEVEN D. TEMPLER
88656
LICENSED
PROFESSIONAL ENGINEER

STEVEN D. TEMPLER P.E. 12-05-2007
DATE

NO.	REVISION	BY	DATE

CP&Y Chiang, Patel & Yerby, Inc.

TEDSI INFRASTRUCTURE GROUP
Consulting Engineers
10999 IH 10 West • Suite 320
San Antonio, Texas 78230
(210) 858-6610

BEXAR COUNTY
PUBLIC WORKS DIVISION

F.M. 2696 (BLANCO ROAD)

SW3P LAYOUT
PHASE 4 STAGE 4
STA 136+50.00 TO STA 147+50.00

SHEET 2 OF 8

Designed: CA	STATE	BEXAR COUNTY FILE NUMBER	PLAN SET NO.
Checked: SDT	TEXAS		331
Drawn: SS	COUNTY		OF
Checked: SDT	BEXAR		842

p:\2007\27958-1 blanco rd south\design\cs\ENVIRONMENTAL\Phase IV\61021SSW3P_P4_S4-02.dgn
12/9/2007 11:31:25 AM

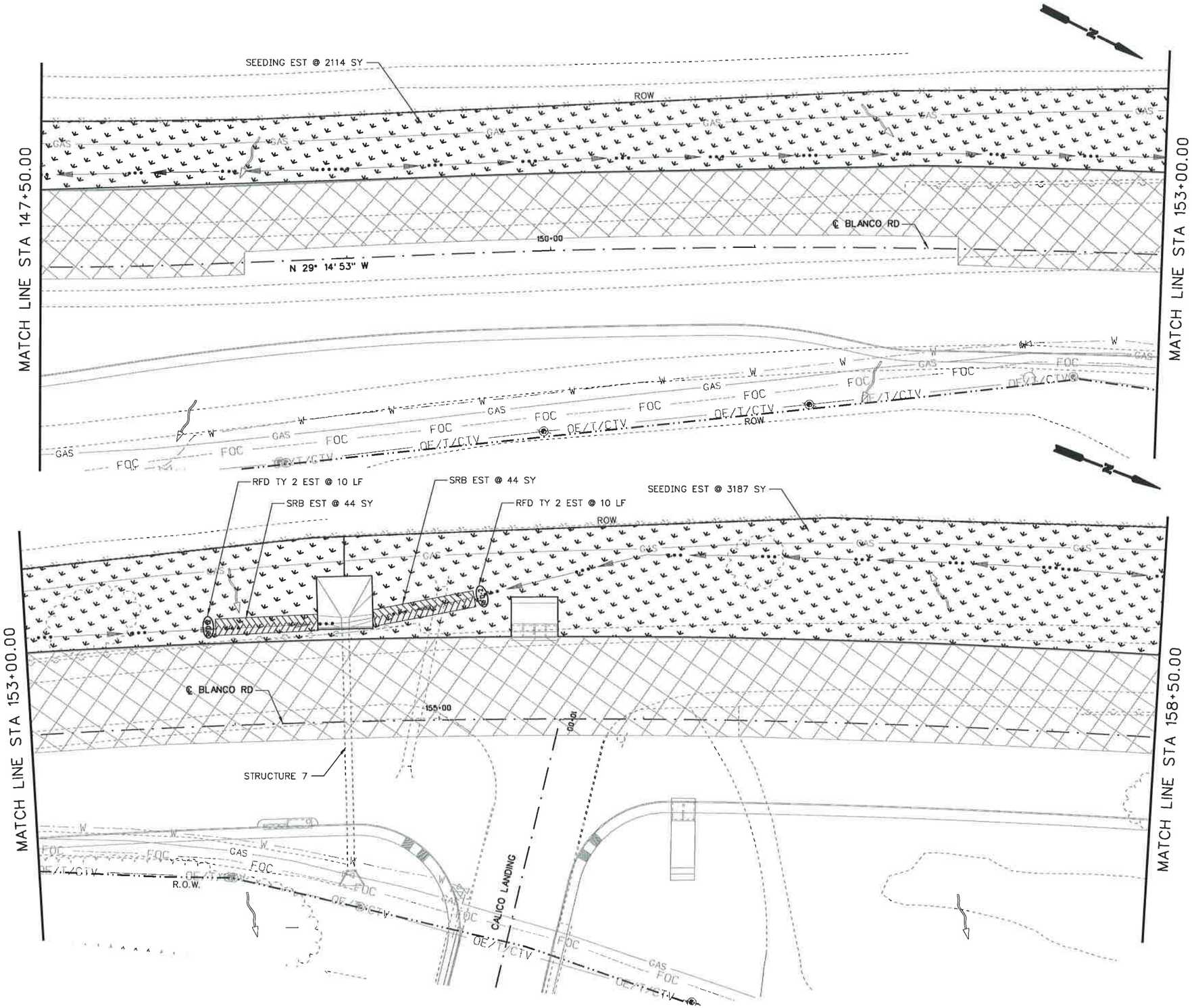

25 12.5 0 25 50
HORIZ. SCALE FEET

LEGEND

- WORKZONE
- TEMP DETOUR
- ROCK FILTER DAM (RFD)
- SEDIMENT CONTROL FENCE (SCF)
- DITCH FLOW LINE
- OVERALL DRAINAGE FLOW
- SEEDING
- SOIL RETENTION BLANKET (SRB)
- SANDBAGS FOR EROSION CONTROL

NOTES:
1. CONSTRUCTION EXITS (TY1) TO BE LOCATED IN THE FIELD AND APPROVED BY THE ENGINEER. THE SIZE OF THE CONSTRUCTION EXITS WILL BE 78 SY EACH (50' X 14'). REFER TO STATE STANDARD "EC(3)-93" FOR DETAILS.

STATE OF TEXAS
STEVEN D. TEMPLER
88656
LICENSED
PROFESSIONAL ENGINEER

STEVEN D. TEMPLER P.E. 12-09-2007
DATE

NO.	REVISION	BY	DATE

CP&Y Chiang, Patel & Yerby, Inc.

TEDSI INFRASTRUCTURE GROUP
Consulting Engineers
10999 IH 10 West • Suite 320
San Antonio, Texas 78230
(210) 858-0610

BEXAR COUNTY
PUBLIC WORKS DIVISION

F.M. 2696 (BLANCO ROAD)

SW3P LAYOUT
PHASE 4 STAGE 4
STA 147+50.00 TO STA 158+50.00

SHEET 3 OF 8

Designed: CA	STATE	BEXAR COUNTY FILE NUMBER	PLAN SET NO.
Checked: SDT	TEXAS		832
Drawn: SS	COUNTY		OF
Checked: SDT	BEXAR		842

p:\2007\27958-1 blanco rd south\design\cs\ENVIRONMENTAL\Phase IV\6102TSSW3P_P4_S4-03.050
12/9/2007 11:31:28 AM

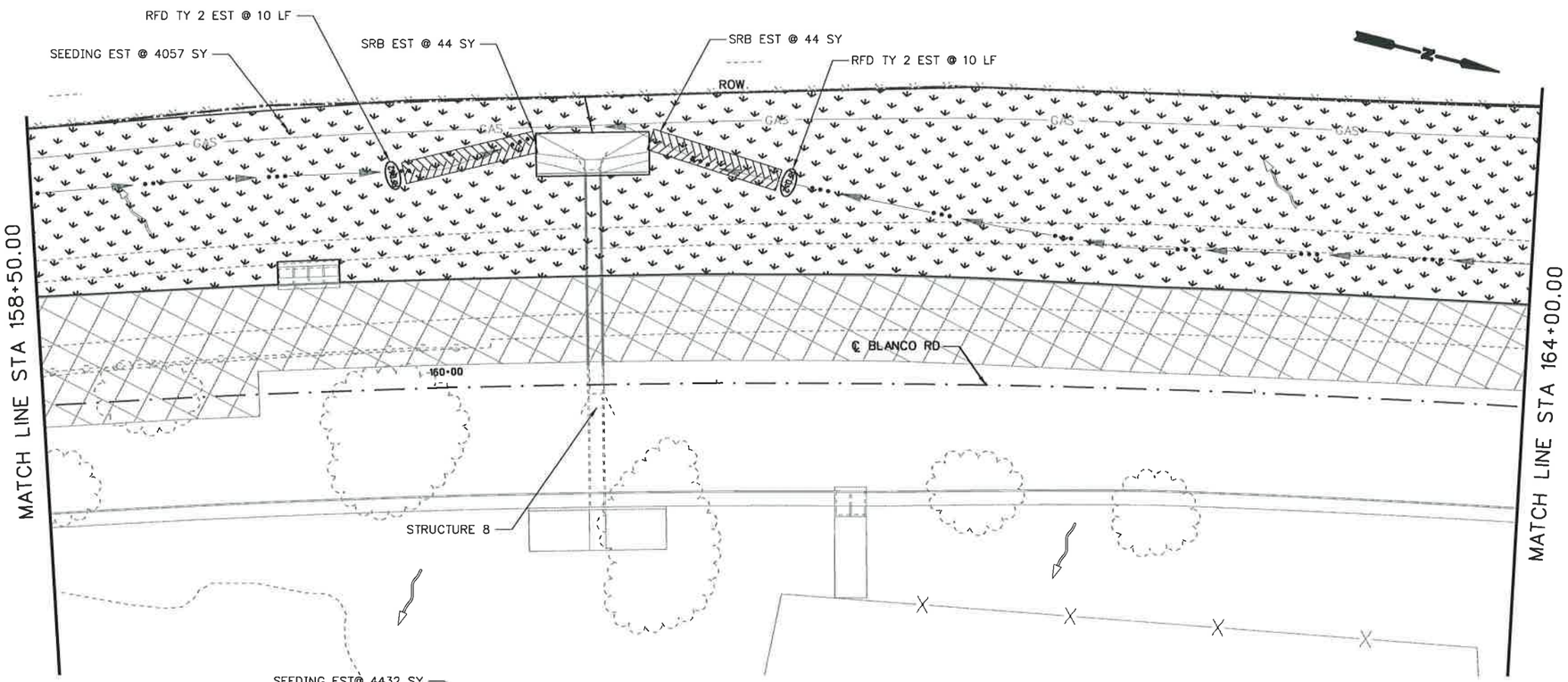

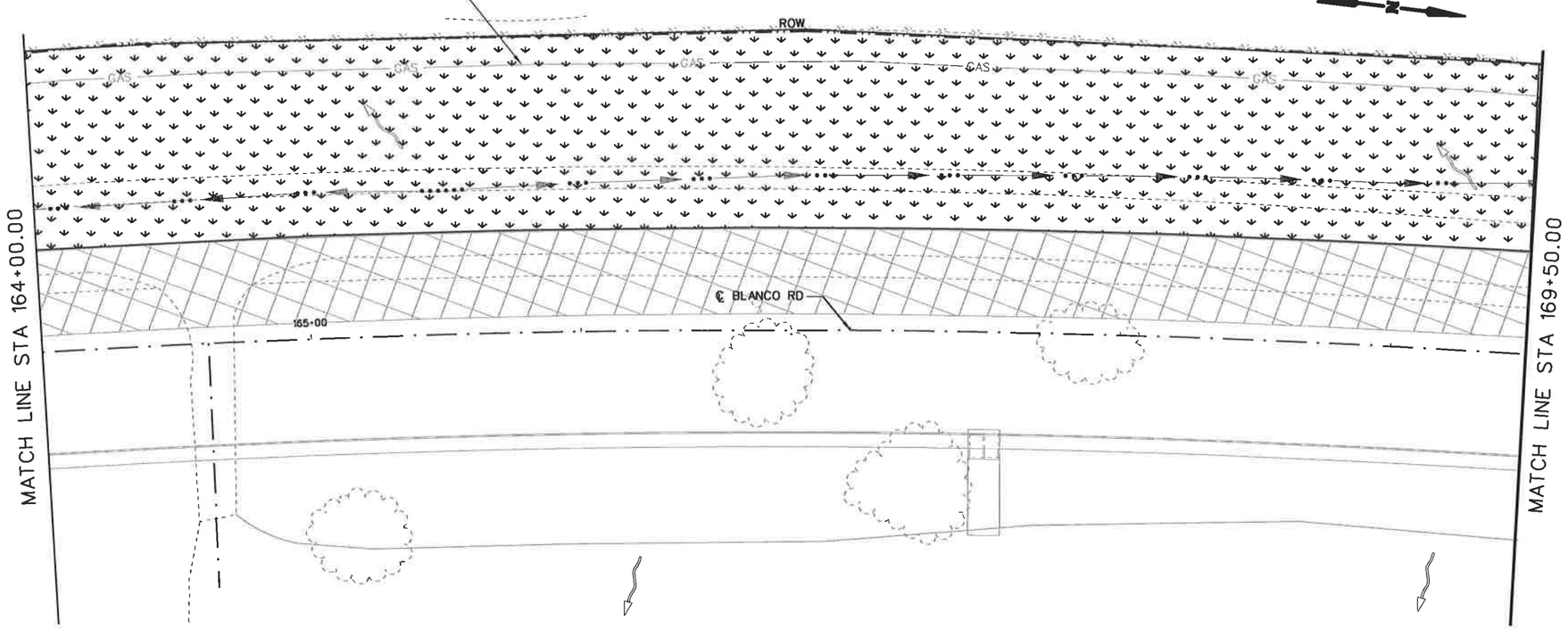

25 12.5 0 25 50
HORIZ. SCALE FEET

LEGEND

- WORKZONE
- TEMP DETOUR
- ROCK FILTER DAM (RFD)
- SEDIMENT CONTROL FENCE (SCF)
- DITCH FLOW LINE
- OVERALL DRAINAGE FLOW
- SEEDING
- SOIL RETENTION BLANKET (SRB)
- SANDBAGS FOR EROSION CONTROL

NOTES:
1. CONSTRUCTION EXITS (TY1) TO BE LOCATED IN THE FIELD AND APPROVED BY THE ENGINEER. THE SIZE OF THE CONSTRUCTION EXITS WILL BE 78 SY EACH (50' X 14'). REFER TO STATE STANDARD "EC(3)-93" FOR DETAILS.

STATE OF TEXAS
STEVEN D. TEMPLER
88656
LICENSED
PROFESSIONAL ENGINEER

STEVEN D. TEMPLER P.E. 12-09-2007
DATE

NO.	REVISION	BY	DATE

CP&Y Chiang, Patel & Yerby, Inc.

TEDSI INFRASTRUCTURE GROUP
Consulting Engineers
16999 IH 10 West • Suite 320
San Antonio, Texas 78230
(210) 858-8610

BEXAR COUNTY
PUBLIC WORKS DIVISION

F.M. 2696 (BLANCO ROAD)

SW3P LAYOUT
PHASE 4 STAGE 4
STA 158+50 TO STA 169+50.00

SHEET 4 OF 8

Designed: CA	STATE	BEXAR COUNTY FILE NUMBER	PLAN SET NO.
Checked: SDT	TEXAS		33
Drawn: SS	COUNTY		OF
Checked: SDT	BEXAR		842

p:\2007\27958-1 blanco rd south\design\cs\ENVIRONMENTAL\Phase IV\6102TSSW3P_P4_S4-04.dgn
12/9/2007 11:31:30 AM

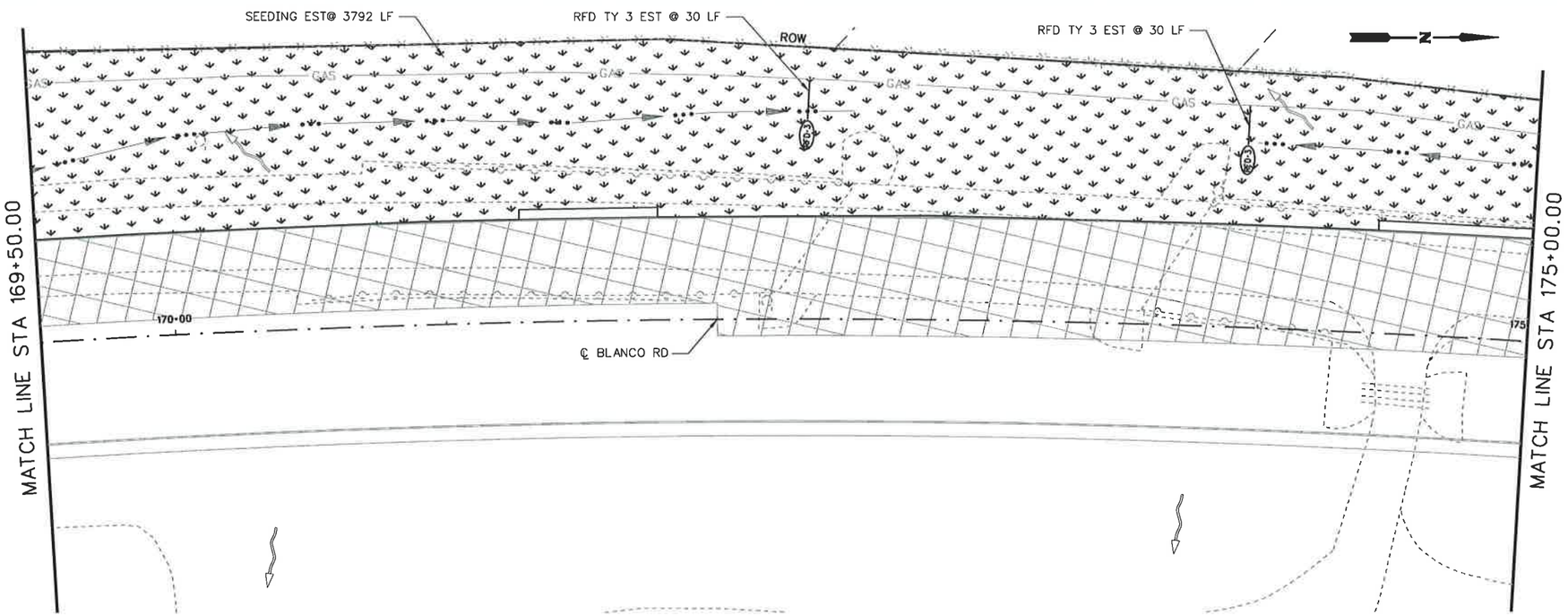

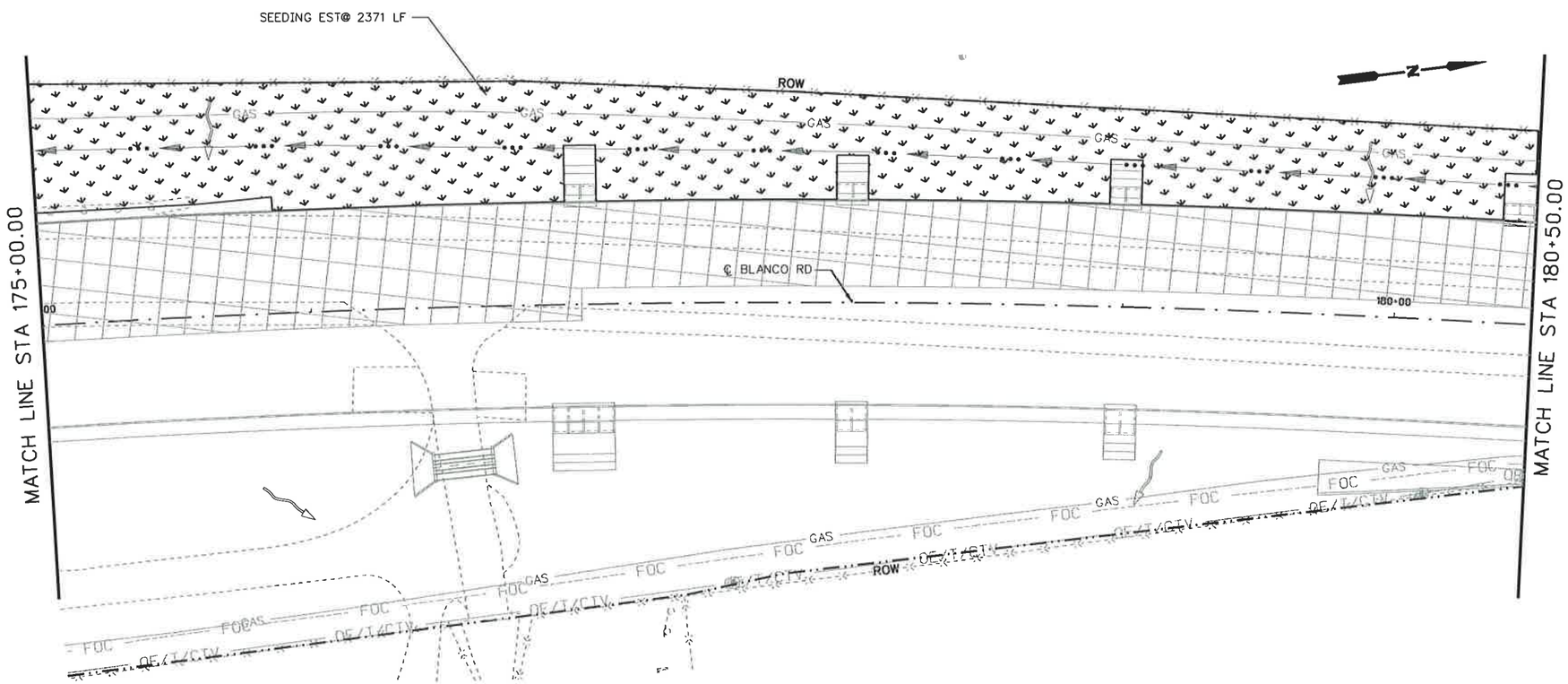

25 12.5 0 25 50
SCALE FEET

LEGEND

- WORKZONE
- TEMP DETOUR
- ROCK FILTER DAM (RFD)
- SEDIMENT CONTROL FENCE (SCF)
- DITCH FLOW LINE
- OVERALL DRAINAGE FLOW
- SEEDING
- SOIL RETENTION BLANKET (SRB)
- SANDBAGS FOR EROSION CONTROL

NOTES:
1. CONSTRUCTION EXITS (TY1) TO BE LOCATED IN THE FIELD AND APPROVED BY THE ENGINEER. THE SIZE OF THE CONSTRUCTION EXITS WILL BE 78 SY EACH (50' X 14'). REFER TO STATE STANDARD "EC(3)-93" FOR DETAILS.

STATE OF TEXAS
STEVEN D. TEMPLER
88656
LICENSED
PROFESSIONAL ENGINEER

STEVEN D. TEMPLER P.E. 12-09-2007
STEVEN D. TEMPLER DATE

NO.	REVISION	BY	DATE

CP&Y Chiang, Patel & Yerby, Inc.

TEDSI INFRASTRUCTURE GROUP
Consulting Engineers
10999 IH 10 West • Suite 320
San Antonio, Texas 78230
(210) 858-6610

BEXAR COUNTY
PUBLIC WORKS DIVISION

F.M. 2696 (BLANCO ROAD)

SW3P LAYOUT
PHASE 4 STAGE 4
STA 169+50.00 TO STA 180+50.00

SHEET 5 OF 8

Designed: CA	STATE	BEXAR COUNTY FILE NUMBER	PLAN SET NO.
Checked: SDT	TEXAS		834
Drawn: SS	COUNTY		OF
Checked: SDT	BEXAR		842

p:\2007\27958-1 blanco rd south\design\csj\ENVIRONMENTAL\Phase IV\6102TSSW3P_P4_S4-05.dgn
12/9/2007 11:31:32 AM

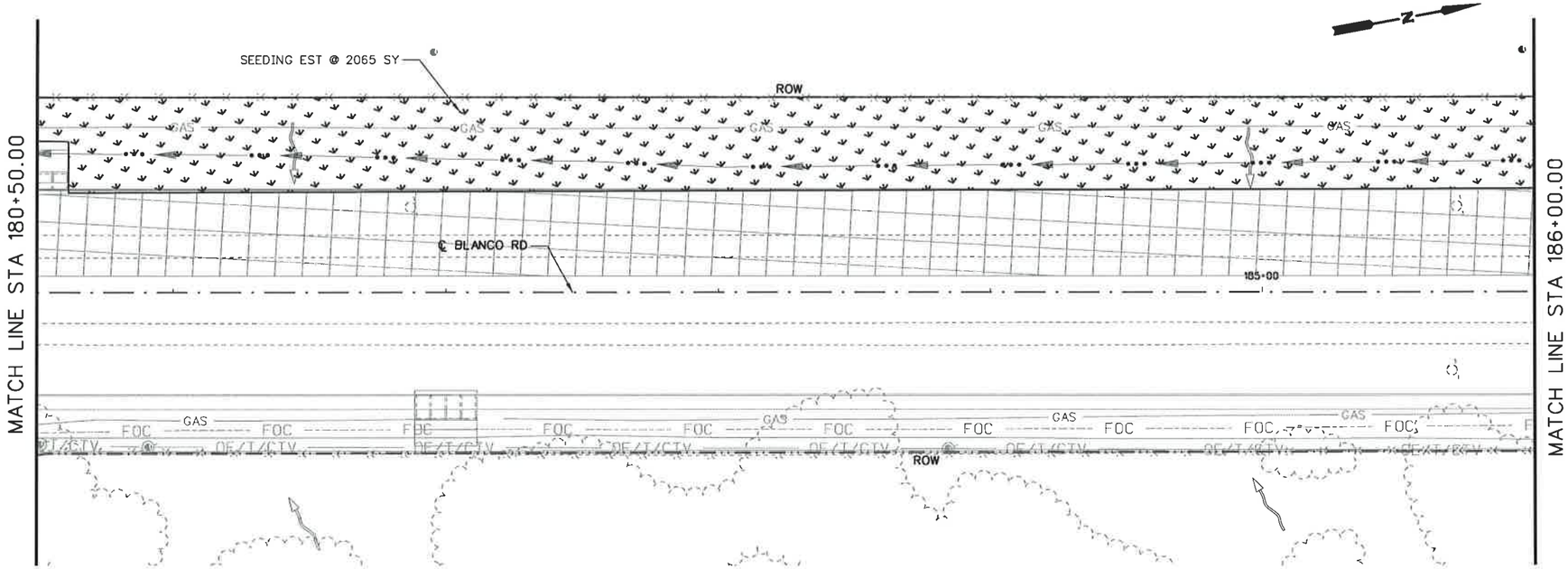

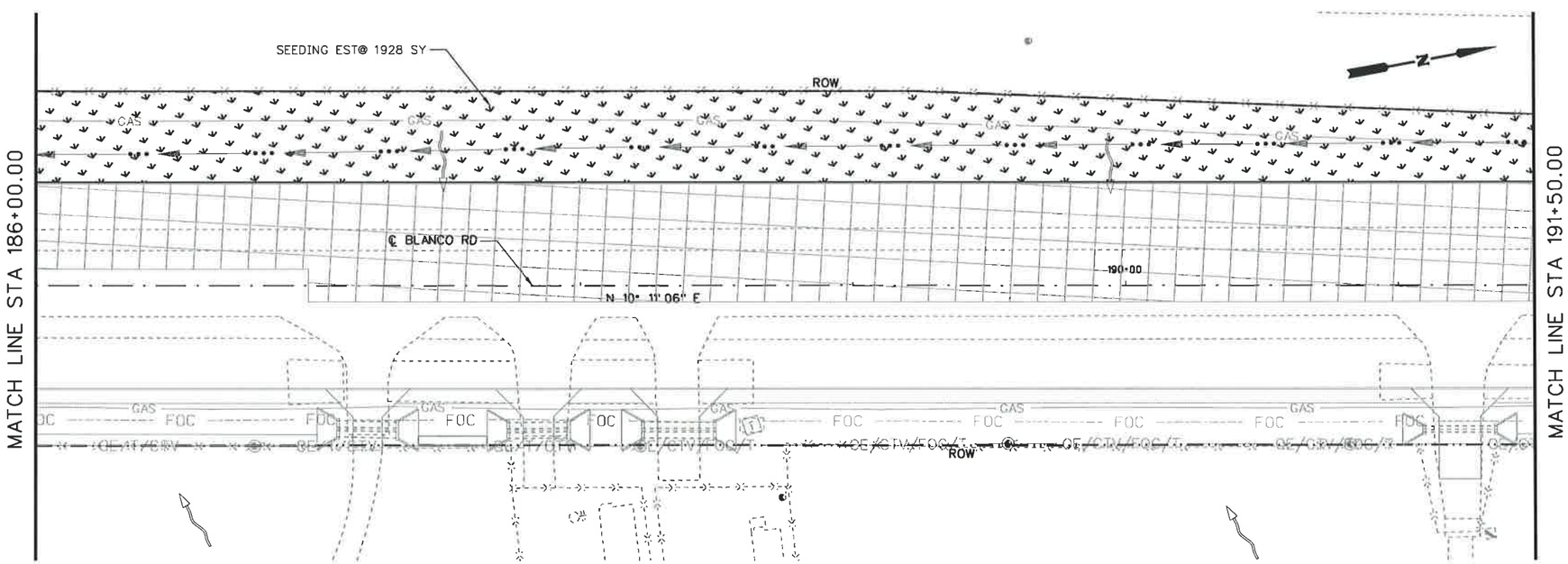

25 12.5 0 25 50
HORIZ. SCALE FEET

LEGEND

- WORKZONE
- TEMP DETOUR
- ROCK FILTER DAM (RFD)
- SEDIMENT CONTROL FENCE (SCF)
- DITCH FLOW LINE
- OVERALL DRAINAGE FLOW
- SEEDING
- SOIL RETENTION BLANKET (SRB)
- SANDBAGS FOR EROSION CONTROL

NOTES:
1. CONSTRUCTION EXITS (TY1) TO BE LOCATED IN THE FIELD AND APPROVED BY THE ENGINEER. THE SIZE OF THE CONSTRUCTION EXITS WILL BE 78 SY EACH (50' X 14'). REFER TO STATE STANDARD "EC(3)-93" FOR DETAILS.

STATE OF TEXAS
STEVEN D. TEMPLER
88656
LICENSED
PROFESSIONAL ENGINEER

STEVEN D. TEMPLER — DATE 12-09-2007

NO.	REVISION	BY	DATE

CP&Y Chiang, Patel & Yerby, Inc.

TEDSI INFRASTRUCTURE GROUP
Consulting Engineers
10999 IH 10 West • Suite 320
San Antonio, Texas 78230
(210) 858-0610

BEXAR COUNTY
PUBLIC WORKS DIVISION

F.M. 2696 (BLANCO ROAD)

SW3P LAYOUT

PHASE 4 STAGE 4
STA 180+50.00 TO STA 191+50.00

SHEET 6 OF 8

Designed: CA	STATE	BEXAR COUNTY FILE NUMBER	PLAN SET NO.
Checked: SDT	TEXAS		835
Drawn: SS	COUNTY		OF
Checked: SDT	BEXAR		842

p:\2007\27958-1 blanco rd south\design\cs\ENVIRONMENTAL\Phase IV\61027SSW3P_P4_S4-06.050
12/9/2007 11:31:34 AM

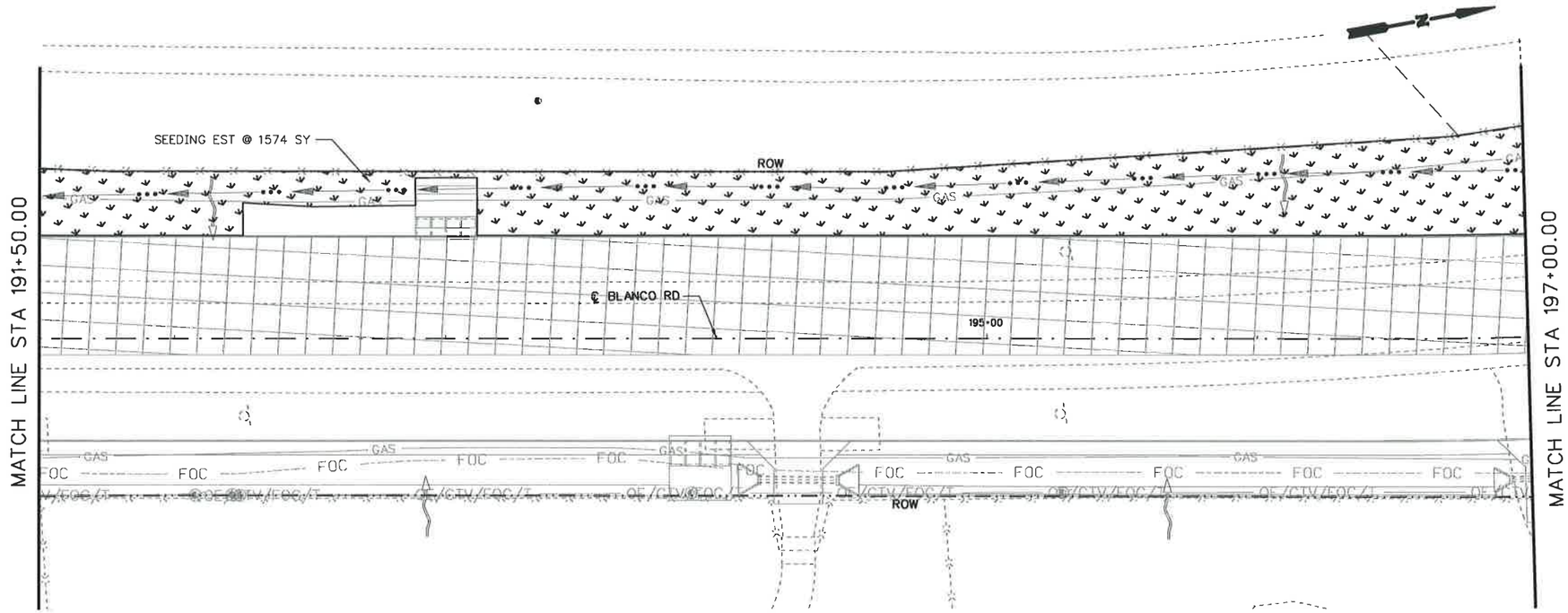

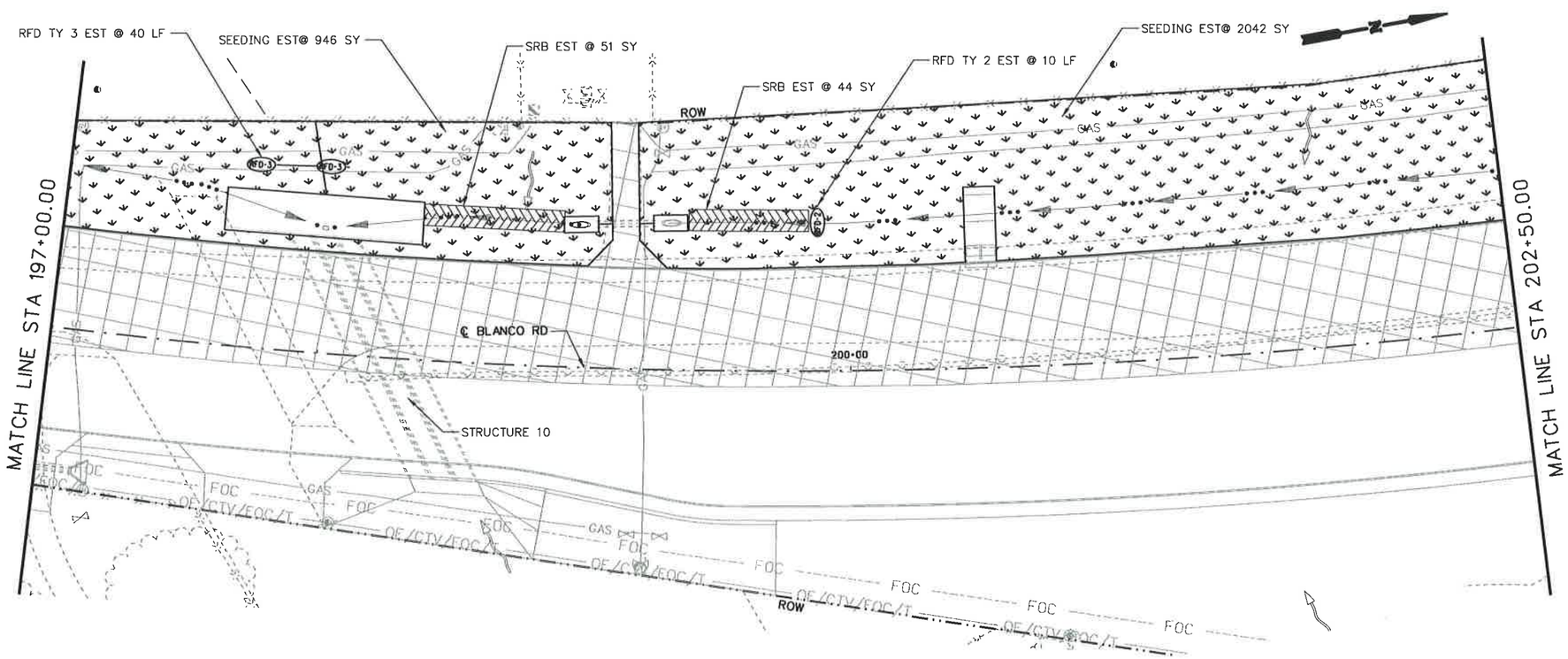

25 12.5 0 25 50
HORIZ. SCALE FEET

LEGEND

- WORKZONE
- TEMP DETOUR
- ROCK FILTER DAM (RFD)
- SEDIMENT CONTROL FENCE (SCF)
- DITCH FLOW LINE
- OVERALL DRAINAGE FLOW
- SEEDING
- SOIL RETENTION BLANKET (SRB)
- SANDBAGS FOR EROSION CONTROL

NOTES:
1. CONSTRUCTION EXITS (TY1) TO BE LOCATED IN THE FIELD AND APPROVED BY THE ENGINEER. THE SIZE OF THE CONSTRUCTION EXITS WILL BE 78 SY EACH (50' X 14'). REFER TO STATE STANDARD "EC(3)-93" FOR DETAILS.

STATE OF TEXAS
STEVEN D. TEMPLER
88656
LICENSED
PROFESSIONAL ENGINEER

STEVEN D. TEMPLER P.E. 12-08-2007
STEVEN D. TEMPLER DATE

NO.	REVISION	BY	DATE

CP&Y Chiang, Patel & Yerby, Inc.

TEDSI INFRASTRUCTURE GROUP
Consulting Engineers
10999 IH 10 West • Suite 320
San Antonio, Texas 78230
(210) 858-0610

BEXAR COUNTY
PUBLIC WORKS DIVISION

F.M. 2696 (BLANCO ROAD)

SW3P LAYOUT
PHASE 4 STAGE 4
STA 191+50.00 TO STA 202+50.00

SHEET 7 OF 8

Designed: CA	STATE	BEXAR COUNTY FILE NUMBER	PLAN SET NO. 836
Checked: SDT	TEXAS		
Drawn: SS	COUNTY		OF
Checked: SDT	BEXAR		842

p:\2007\27958-1 blanco rd south\design\cs\ENVIRONMENTAL\Phase IV\6102TSSW3P_P4_S4-07.DSD
12/9/2007 11:31:35 AM

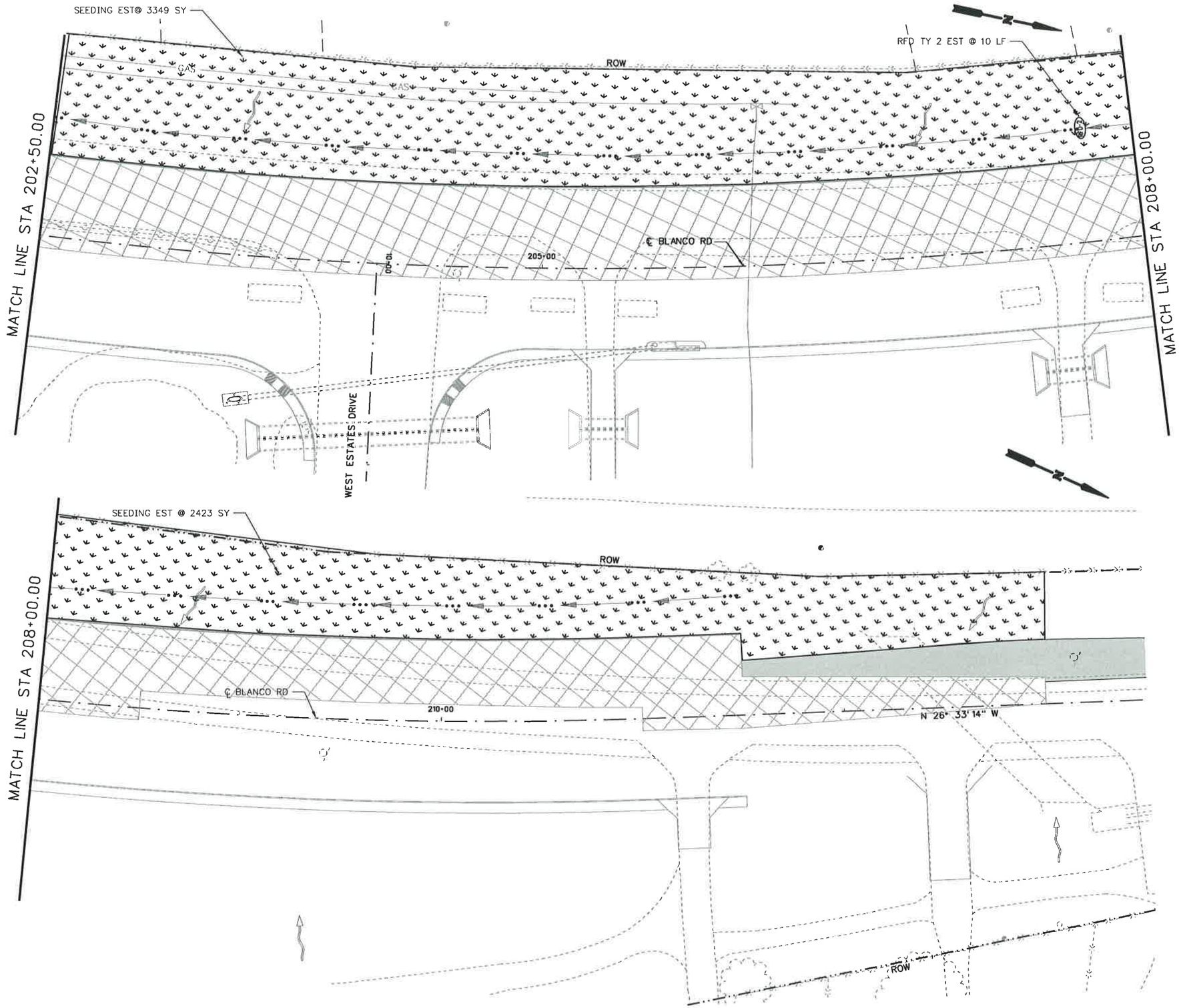

25 12.5 0 25 50
HORIZ. SCALE FEET

LEGEND

- WORKZONE
- TEMP DETOUR
- (RFD) ROCK FILTER DAM (RFD)
- (SCF) SEDIMENT CONTROL FENCE (SCF)
- DITCH FLOW LINE
- OVERALL DRAINAGE FLOW
- SEEDING
- SOIL RETENTION BLANKET (SRB)
- SANDBAGS FOR EROSION CONTROL

NOTES:
1. CONSTRUCTION EXITS (TY1) TO BE LOCATED IN THE FIELD AND APPROVED BY THE ENGINEER. THE SIZE OF THE CONSTRUCTION EXITS WILL BE 78 SY EACH (50' X 14'). REFER TO STATE STANDARD "EC(3)-93" FOR DETAILS.

STATE OF TEXAS
STEVEN D. TEMPLER
88656
LICENSED
PROFESSIONAL ENGINEER

STEVEN D. TEMPLER P.E. 12-04-2007
STEVEN D. TEMPLER DATE

NO.	REVISION	BY	DATE

CP&Y Chiang, Patel & Yerby, Inc.

TEDSI INFRASTRUCTURE GROUP
Consulting Engineers
10999 IH 10 West • Suite 320
San Antonio, Texas 78230
(210) 858-0610

BEXAR COUNTY
PUBLIC WORKS DIVISION

F.M. 2696 (BLANCO ROAD)

SW3P LAYOUT
PHASE 4 STAGE 4
STA 202+50.00 TO STA 213+50.00

SHEET 8 OF 8

Designed: CA	STATE	BEXAR COUNTY FILE NUMBER	PLAN SET NO.
Checked: SDT	TEXAS		83
Drawn: SS	COUNTY		OF
Checked: SDT	BEXAR		84

p:\2007\27958-1 blanco rd south\design\csj\ENVIRONMENTAL\Phase IV\6102TSSW3P_P4_S4-08.050
12/9/2007 11:31:37 AM

SHEET OMITTED

NO.	REVISION	BY	DATE

CP&Y Chiang, Patel & Yerby, Inc.

BEXAR COUNTY
PUBLIC WORKS DIVISION

F.M. 2696 (BLANCO ROAD)

OMITTED SHEETS

Designed: RTF	STATE	BEXAR COUNTY FILE NUMBER		PLAN SET NO.
Checked: JMC	TEXAS			838
Drawn: CDA	COUNTY			OF
Checked: JMC	BEXAR	2708-01-022, ETC.		842

pw:/Active Projects/BEX6102/8.00 Plans and Drawings/8.10 Cut Sheets/8.1.10 Road/6102CSR05XX.001
12/11/2007 9:53:49 AM

SHEET OMITTED

NO.	REVISION	BY	DATE

CP&Y Chiang, Patel & Yerby, Inc.

BEXAR COUNTY
PUBLIC WORKS DIVISION

F.M. 2696 (BLANCO ROAD)

OMITTED SHEETS

Designed: RTF	STATE	BEXAR COUNTY FILE NUMBER	PLAN SET NO.
Checked: JMC	TEXAS		839
Drawn: CDA	COUNTY		OF
Checked: JMC	BEXAR	2708-01-022, ETC.	842

pw:/Active Projects/BEX6102/8.00 Plans and Drawings/8.10 Cut Sheets/8.1.10 Road/6102CSRGSXX.001
12/11/2007 9:54:12 AM

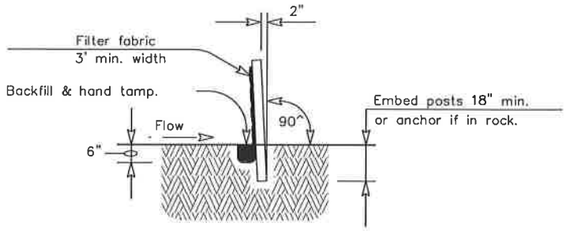

SECTION A–A

SEDIMENT CONTROL FENCE USAGE GUIDELINES

A sediment control fence may be constructed near the downstream perimeter of a disturbed area along a contour to intercept sediment from overland runoff. A 2 year storm frequency may be used to calculate the flow rate to be filtered.

Sediment control fence should be sized to filter a max. flow through rate of 100 GPM/FT^2. Sediment control fence is not recommended to control erosion from a drainage area larger than 2 acres.

PLAN SHEET LEGEND

Sediment Control Fence —— SCF ——

GENERAL NOTES

1. The guidelines shown hereon are suggestions only and may be modified by the Engineer.

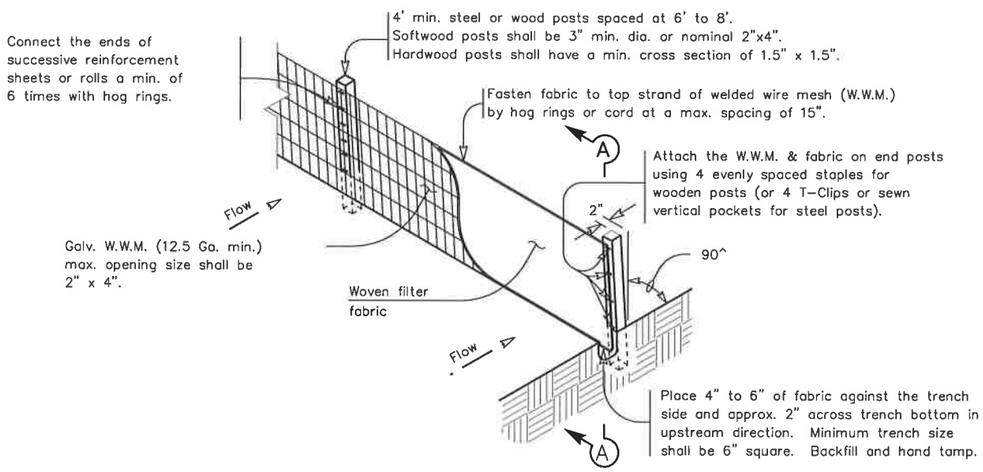

TEMPORARY SEDIMENT CONTROL FENCE

—— SCF ——

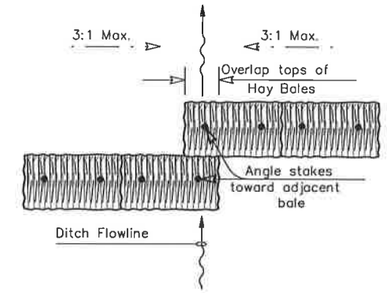

PLAN VIEW

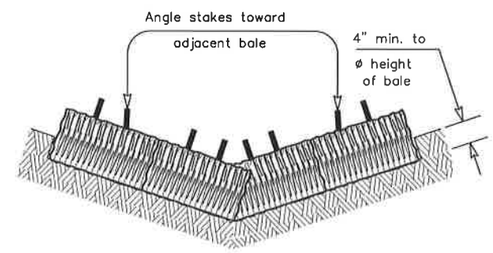

PROFILE VIEW

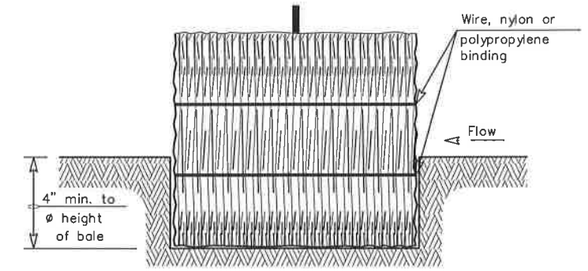

SECTION B–B

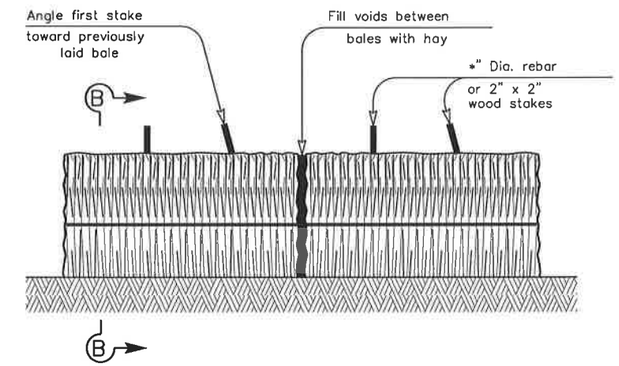

BALED HAY FOR EROSION CONTROL

—— BH ——

PLANS SHEET LEGEND

Baled Hay —— BH ——

GENERAL NOTES

1. Hay bales shall be a minimum of 30" in length and weigh a minimum of 50 Lbs.
2. Hay bales shall be bound by either wire or nylon or polypropylene string. The bales shall be composed entirely of vegetative matter.
3. Hay bales shall be embedded in the soil a minimum of 4" and where possible ø the height of the bale.
4. Hay bales shall be placed in a row with ends tightly abutting the adjacent bales. The bales shall be placed with bindings parallel to the ground.
5. Hay bales shall be securely anchored in place with *" Dia. rebar or 2" x 2" wood stakes, driven through the bales. The first stake shall be angled towards the previously laid bale to force the bales together.
6. The guidelines shown hereon are suggestions only and may be modified by the Engineer.

BALED HAY USAGE GUIDELINES

A Baled Hay installation may be constructed near the downstream perimeter of a disturbed area along a contour to intercept sediment from overland runoff. A two year storm frequency may be used to calculate the flow rate to be filtered. The installation should be sized to filter a maximum flow thru rate of 5 GPM/FT^2 of cross sectional area. Baled hay may be used at the following locations:

1. Where the runoff approaching the baled hay flows over disturbed soil for less than 100'. If the slope of the disturbed soil exceeds 10%, the length of slope upstream the baled hay should be less than 50'.
2. Where the installation will be required for less than 3 months.
3. Where the contributing drainage area is less than ø acre.

For Baled Hay installations in small ditches, the additional following considerations apply:

1. The ditch sideslopes should be graded as flat as possible to maximize the drainage flowrate thru the hay.
2. The ditch should be graded large enough to contain the overtopping drainage when sediment has filled to the top of the baled hay.

Bales should be replaced usually every 2 months or more often during wet weather when loss of structural integrity is accelerated.

REVISION HISTORY

Texas Department of Transportation
Design Division (Roadway)

TEMPORARY EROSION, SEDIMENT AND WATER POLLUTION CONTROL MEASURES

FENCED & BALED HAY

EC(1)–93

FILE: EC193.DGN	DN: HEJ	CK: HEJ	DW: BGD	CK:	
©TxDOT JUNE 1993	DISTRICT	FEDERAL AID PROJECT			SHEET
REVISIONS	SAT				840
	COUNTY		CONTROL	SECT	JOB	HIGHWAY
	BEXAR					FM 2696

DISCLAIMER :
The use of this standard is governed by the Texas Engineering Practice Act." No warranty of any kind is made by TxDOT for any purpose whatsoever. TxDOT assumes no responsibility for the conversion of this standard to other formats or for incorrect results or damages resulting from its use.

Date and Time Plotted: 10/29/2007 8:06:40 PM
File Name: $(_USTN_USERMANE)
File Name: ...\r—\Standards\SW3P\EC193.DGN

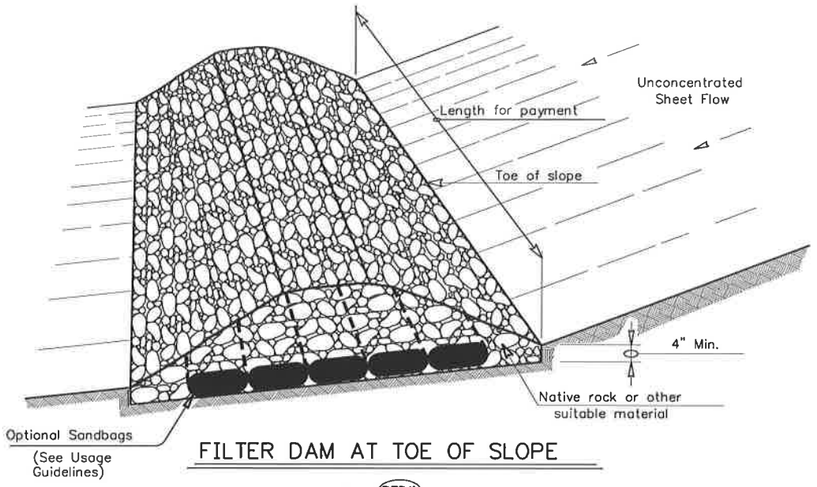

FILTER DAM AT TOE OF SLOPE

RFD1 — TYPE 1

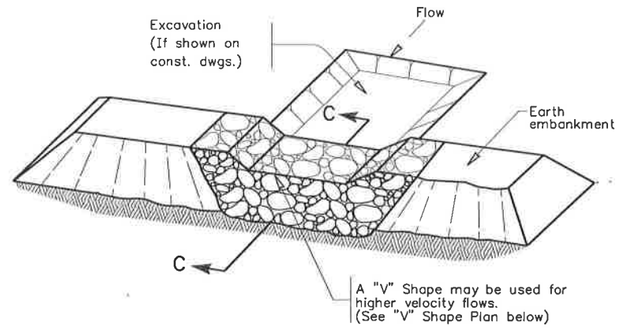

FILTER DAM AT SEDIMENT TRAP

RFD1 — OR — RFD2

TYPE 1 OR TYPE 2

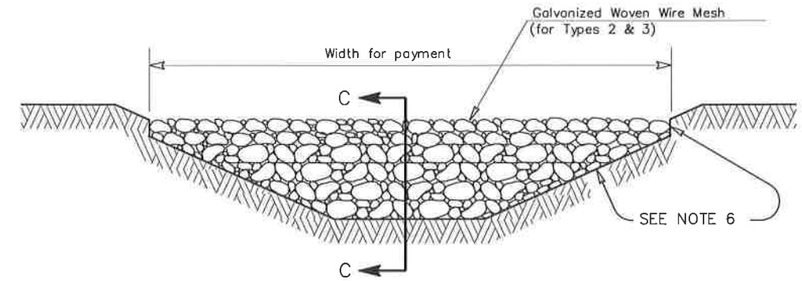

FILTER DAM AT CHANNEL SECTIONS

RFD1 — OR — RFD2 — OR — RFD3

TYPE 1 OR TYPE 2

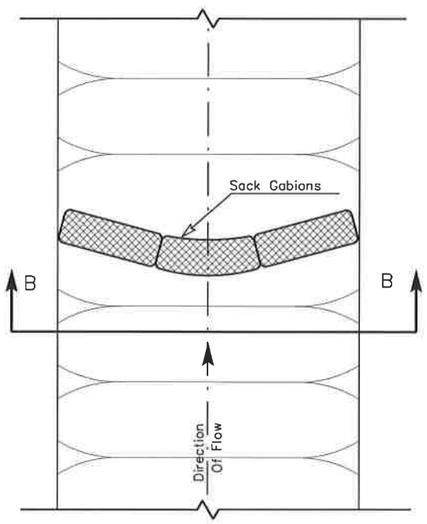

PLAN VIEW

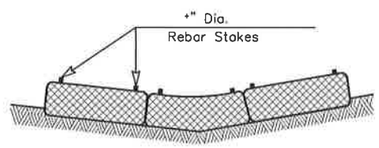

SECTION B–B

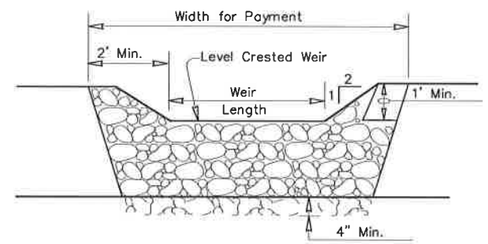

PROFILE

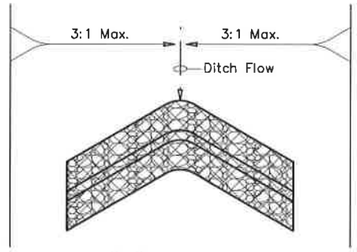

"V" SHAPE

(Plan View)

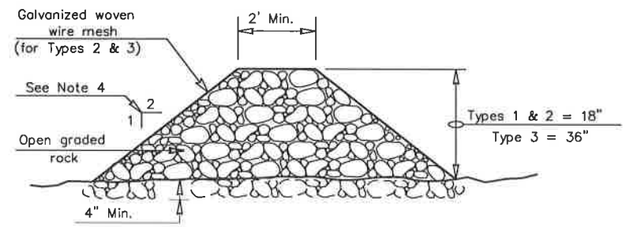

SECTION C–C

PLANS SHEET LEGEND

Type 1 Rock Filter Dam	RFD1
Type 2 Rock Filter Dam	RFD2
Type 3 Rock Filter Dam	RFD3

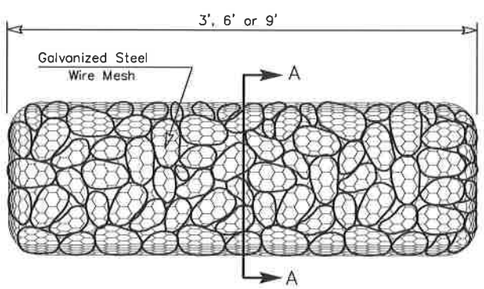

TYPE 4 (SACK GABIONS)

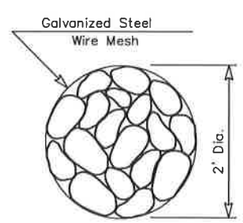

SECTION A–A

ROCK FILTER DAM USAGE GUIDELINES

Rock Filter Dams should be constructed downstream from disturbed areas to intercept sediment from overland runoff and/or concentrated flow. The dams should be sized to filter a maximum flow through rate of 60 GPM/FT^2 of cross sectional area. A 2 year storm frequency may be used to calculate the flow rate.

Type 1 (18" high with no wire mesh): Type 1 may be used at the toe of slopes, around inlets, in small ditches, and at dike or swale outlets. This type of dam is recommended to control erosion from a drainage area of 5 acres or less. Type 1 may not be used in concentrated high velocity flows (approx. 8 Ft/Sec or more) in which aggregate wash out may occur. Sandbags may be used at the embedded foundation (4" deep min.) for better filtering efficiency of low flows if called for on the plans or directed by the Engineer.

Type 2 (18" high with wire mesh): Type 2 may be used in ditches and at dike or swale outlets.

Type 3 (36" high with wire mesh): Type 3 may be used in stream flow and should be secured to the stream bed.

Type 4 (Sack gabions): Type 4 May be used in ditches and smaller channels to form an erosion control dam.

GENERAL NOTES

1. If shown on the plans or directed by the Engineer, filter dams should be placed near the toe of slopes where erosion is anticipated, upstream and/or downstream at drainage structures, and in roadway ditches and channels to collect sediment.
2. Materials (aggregate, wire mesh, sandbags, etc.) shall be as indicated by the specification for "Rock Filter Dams for Erosion and Sedimentation Control".
3. The rock filter dam dimensions shall be as indicated on the SW3P plans.
4. Side slopes should be 2:1 or flatter. Dams within the safety zone shall have sideslopes of 6:1 or flatter.
5. Maintain a minimum of 1' between top of rock filter dam weir and top of embankment for filter dams at sediment traps.
6. Filter dams should be embedded a minimum of 4" into existing ground.
7. The sediment trap for ponding of sediment laden runoff shall be of the dimensions shown on the plans.
8. Rock filter dam types 2 & 3 shall be secured with 20 gauge galvanized woven wire mesh with 1" diameter hexagonal openings. The aggregate shall be placed on the mesh to the height & slopes specified. The mesh shall be folded at the upstream side over the aggregate and tightly secured to itself on the downstream side using wire ties or hog rings. In stream use the mesh should be secured or staked to the stream bed prior to aggregate placement.
9. Sack Gabions should be staked down with +" dia. rebar stakes.
10. Flow outlet should be onto a stabilized area (vegetation, rock, etc.).
11. The guidelines shown hereon are suggestions only and may be modified by the Engineer.

REVISION HISTORY

Texas Department of Transportation
Design Division (Roadway)

TEMPORARY EROSION, SEDIMENT AND WATER POLLUTION CONTROL MEASURES

ROCK FILTER DAMS

EC(2)–93

FILE: EC293.DGN	ON: HEJ	CK: HEJ	DW: BGD	CK:
©TxDOT JUNE 1993	DISTRICT	FEDERAL AID PROJECT		SHEET
REVISIONS	SAT			841
	COUNTY	CONTROL	SECT	JOB	HIGHWAY
	BEXAR				FM 2696

DISCLAIMER :
The use of this standard is governed by the Texas Engineering Practice Act. No warranty of any kind is made by TxDOT for any purpose whatsoever. TxDOT assumes no responsibility for the conversion of this standard to other formats or for incorrect results or damages resulting from its use.

Date and Time Plotted: 10/29/2007 – 8:06:41 PM
File Name: $(_USTN_USERNAME)
File Name: ...\<~* Standards\SW3P\EC293.DGN

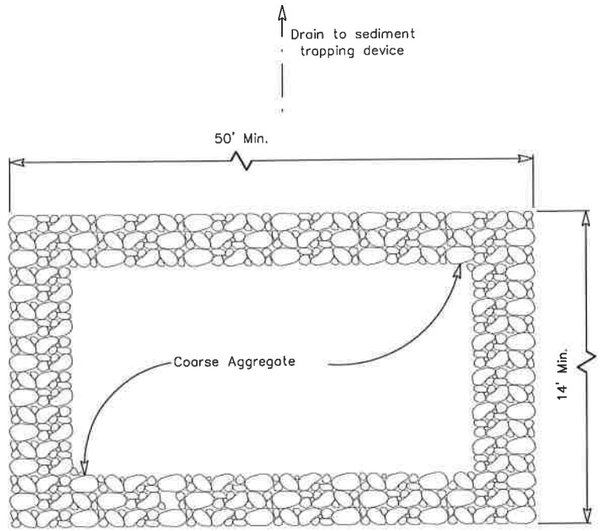

PLAN

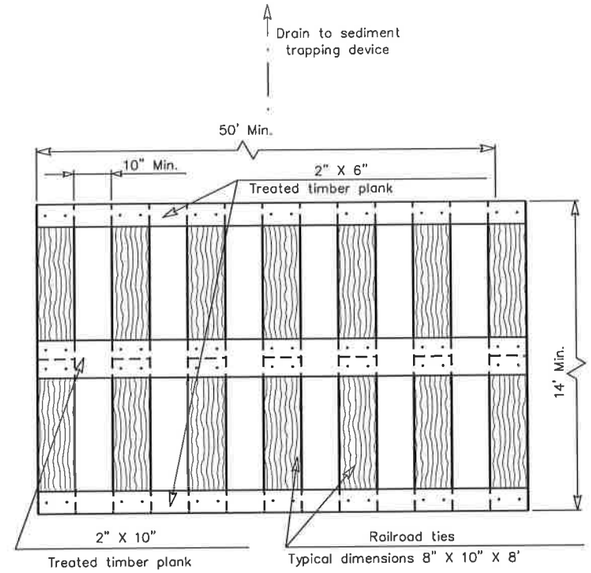

PLAN

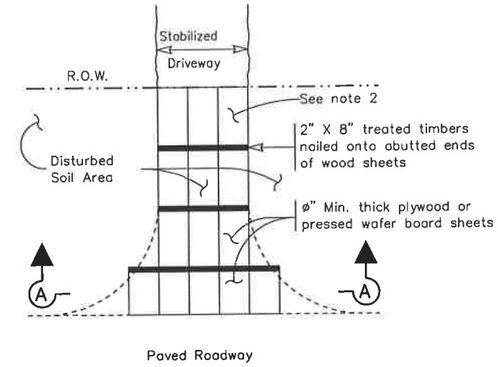

PLAN

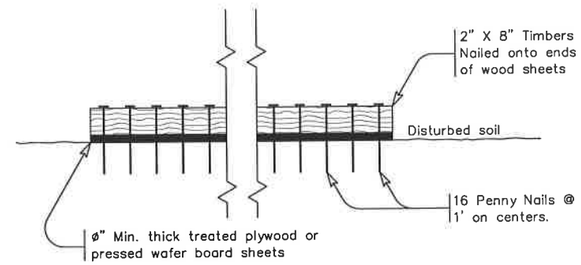

SECTION A-A

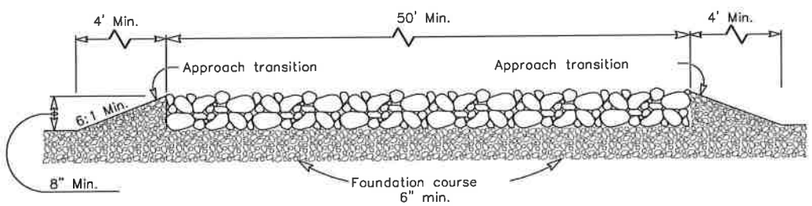

PROFILE

CONSTRUCTION EXIT (TYPE 1)

GENERAL NOTES

1. The length of the type 1 construction exit shall be as indicated on the plans, but not less than 50'.
2. The coarse aggregate should be open graded with a size of 4" to 8".
3. The approach transitions should be no steeper than 6:1 and constructed as directed by the Engineer.
4. The construction exit foundation course shall be flexible base, bituminous concrete, portland cement concrete or other material as approved by the Engineer.
5. The construction exit shall be graded to allow drainage to a sediment trapping device.
6. The guidelines shown hereon are suggestions only and may be modified by the Engineer.

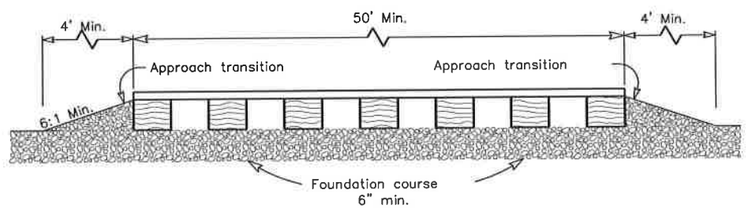

PROFILE

CONSTRUCTION EXIT (TYPE 2)

GENERAL NOTES

1. The length of the type 2 construction exit shall be as indicated on the plans, but not less than 50'.
2. The treated timber planks shall be attached to the railroad ties with ø"x 6" min. lag bolts. Other fasteners may be used as approved by the Engineer.
3. The treated timber planks shall be #2 grade min., and should be free from large and loose knots.
4. The approach transitions shall be no steeper than 6:1 and constructed as directed by the Engineer.
5. The construction exit foundation course shall be flexible base, bituminous concrete, portland cement concrete or other material as approved by the Engineer.
6. The construction exit should be graded to allow drainage to a sediment trapping device.
7. The guidelines shown hereon are suggestions only and may be modified by the Engineer.

CONSTRUCTION EXIT (TYPE 3)

GENERAL NOTES

1. The length of the type 3 construction exit shall be as shown on the plans, or as directed by the Engineer.
2. The type 3 construction exit may be constructed from open graded crushed stone with a size of two to four inches spread a min. of 4" thick to the limits shown on the plans.
3. The treated timber planks shall be #2 grade min., and should be free from large and loose knots.
4. The guidelines shown hereon are suggestions only and may be modified by the Engineer.

REVISION HISTORY

Texas Department of Transportation
Design Division (Roadway)

TEMPORARY EROSION, SEDIMENT AND WATER POLLUTION CONTROL MEASURES

CONSTRUCTION EXITS

EC(3)-93

FILE: EC393.DGN	DN: HEJ	CK: HEJ	DW: BCD	CK:
©TxDOT JUNE 1993	DISTRICT	FEDERAL AID PROJECT		SHEET 842
REVISIONS	SAT			
	COUNTY	CONTROL	SECT	JOB	HIGHWAY
	BEXAR				FM 2696

DISCLAIMER :
The use of this standard is governed by the Texas Engineering Practice Act." No warranty of any kind is made by TxDOT for any purpose whatsoever. TxDOT assumes no responsibility for the conversion of this standard to other formats or for incorrect results or damages resulting from its use.

Date and Time Plotted: 10/29/2007 8:06:42 PM
File Name: $(_USTN_USERMANE)
File Name: ...\er...andards\SW3P\EC393.DGN