TEXAS DEPARTMENT OF TRANSPORTATION
SCHEMATIC LAYOUT

FM 471

BEXAR COUNTY

LIMITS: FROM OLD FM 471 TO FM 1560
C.S.J.: 0849-01-046
LENGTH: 2.29 MI

OFFICE OF DISTRICT ENGINEER
SAN ANTONIO DISTRICT

DESIGN SPEED: 45 MPH
CURRENT ADT: 19,700 (2013)
PROJECTED ADT: 33,900 (2033)
FUNCTIONAL CLASSIFICATION: URBAN ARTERIAL
PROPOSED DESIGN STANDARDS (STRUCTURES): TxDOT HYDRAULIC DESIGN MANUAL 11/2011
PROPOSED DESIGN STANDARDS (ROADWAY): AASHTO (2001) AND TxDOT ROADWAY DESIGN MANUAL (2010)
PROPOSED DESIGN STANDARDS (TRAFFIC): TMUTCD & APPLICABLE STANDARDS

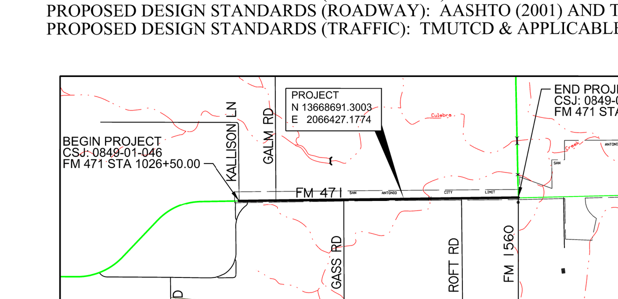

LOCATION MAP

APPROVED: DESIGN DIVISION LETTER DATED

APPROVED: FHWA LETTER DATED

DIRECTOR OF PUBLIC WORKS / COUNTY ENGINEER

APPROVED: ____________, 2012

ENGINEER, P.E. CP&Y INC.

CORRECT: ____________, 2012

TRANSPORTATION PLANNING DIRECTOR

RECOMMENDED FOR APPROVAL: ____________, 2012

DIRECTOR OF TRANSPORTATION
PLANNING AND DEVELOPMENT

APPROVED: ____________, 2012

DISTRICT ENGINEER

PRELIMINARY
FOR REVIEW ONLY

THESE DOCUMENTS ARE PRELIMINARY AND SUBJECT TO CHANGE. THEY ARE NOT INTENDED FOR CONSTRUCTION OR PERMIT PURPOSES. THEY WERE PREPARED BY, OR UNDER THE SUPERVISION OF:

NAME	P.E. #	DATE
JAIME AGUILAR	87606	2/19/2013

ROLL 1 OF 2

"NOT A BIDDING DOCUMENT"

Texas Department of Transportation

PREPARED BY:
CP&Y
300 EAST SONTERRA BLVD.,SUITE 1250
SAN ANTONIO,TX 78258
(210) 494-8004
(210) 494-8286
TBPE FIRM REGISTRATION NO: 1741

THE STATE OF TEXAS · COUNTY OF BEXAR

© 2012 BY TEXAS DEPARTMENT OF TRANSPORTATION; (512) 416-2055;
ALL RIGHTS RESERVED.

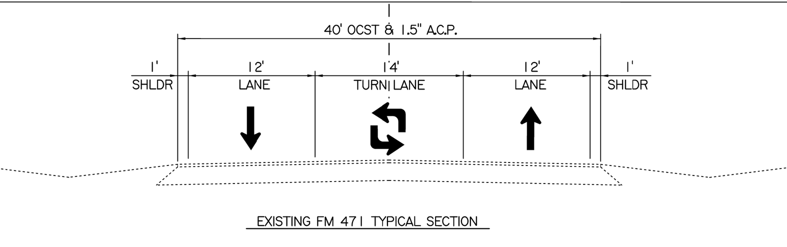

EXISTING FM 471 TYPICAL SECTION

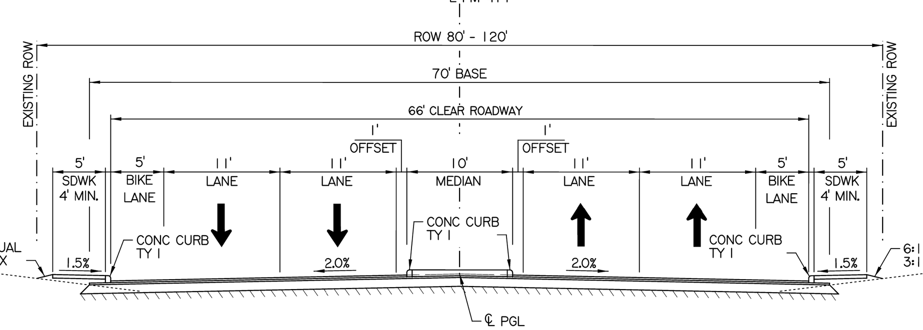

PROPOSED FM 471 TYPICAL SECTION (MEDIAN)

STA 1032+00.00 TO STA 1036+00.00
STA 1040+94.00 TO STA 1054+50.00
STA 1063+50.00 TO STA 1070+06.00
STA 1074+00.00 TO STA 1095+00.00
STA 1099+94.06 TO STA 1117+50.00
STA 1127+00.00 TO STA 1136+49.50
STA 1139+00.00 TO STA 1142+00.00

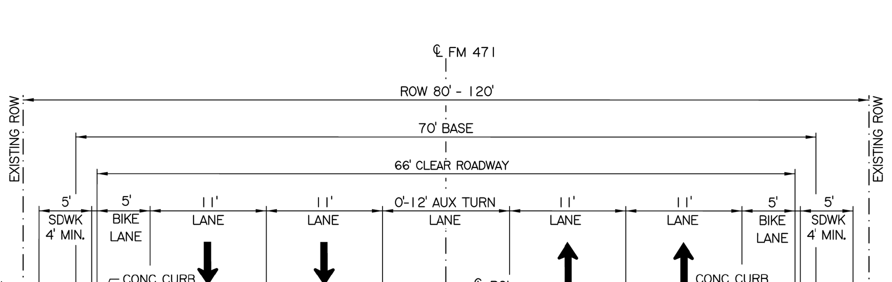

PROPOSED FM 471 TYPICAL SECTION (LEFT TURN LANE)

STA 1023+69.66 TO STA 1032+00.00
STA 1036+00.00 TO STA 1040+94.00
STA 1054+50.00 TO STA 1063+50.00
STA 1070+06.00 TO STA 1074+00.00
STA 1095+00.00 TO STA 1099+94.06
STA 1117+50.00 TO STA 1127+00.00
STA 1136+49.50 TO STA 1139+00.00
STA 1142+00.00 TO STA 1147+70.14

MATCH LINE STA 1080+00.00 (ROLL 2 OF 2)